DREO | Ceramic Heater
Atom 424

USER MANUAL



Thanks for Choosing DREO!

Your support means the world to us.
We hope you enjoy our product as much as we did creating it.

EXTEND YOUR WARRANTY FOR FREE

Scan or visit **dreo.com/warranty**
To extend your warranty for free by registering your product.
If you have any product issues, we always stand ready to help.

(888) 290-1688
Mon - Fri, 9:00 am-5:00 pm PST/PDT
support@dreo.com
www.dreo.com

Find the digital version of this manual at
support.dreo.com/en/support/product

CONTENT

01
IMPORTANT SAFETY INSTRUCTIONS
1-4

02
KNOWING YOUR APPLIANCE
5

03
USING YOUR APPLIANCE
6-10

04
CLEANING AND MAINTENANCE
11-12

05
TROUBLESHOOTING
13

06
DREO CUSTOMER CARE
14-15

IMPORTANT SAFETY INSTRUCTIONS

01

When using electrical appliances, basic precautions should always be followed to reduce the risk of fire, electric shock, and injury to persons and hyperthermia, including the following:

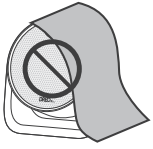



WARNING:
In order to avoid overheating, do not cover the heater.

Do not use the fan heater near flammables and combustibles.

General Safety

1. Read all instructions before using this heater.
2. This heater is hot when in use. To avoid burns, do not let bare skin touch hot surfaces.
3. Use the handle to move this heater.
4. Extreme caution is necessary when any heater is used by or near children or invalids and whenever the heater is left operating and unattended.
5. Do not insert or allow foreign objects to enter any ventilation or exhaust opening as this may cause an electric shock or fire, or damage the heater.
6. The output of this heater may vary and its temperature may become hot enough to burn exposed skin. Use of this heater is not recommended for persons with a high sensitivity to heat or an inability to react to avoid burns.
7. Do not attempt to modify or repair the product by yourself. Doing so could void the warranty and cause damage or personal injury. Only a repair technician may disassemble or repair this product.

8. Make sure that no pieces of polystyrene or other packaging material have been left between elements of the appliance. It may be necessary to pass over the appliance with a vacuum cleaner.
9. If the machine is not working as it should, has received a sharp blow, has been dropped, damaged, left outdoors, or dropped into water, do not use and contact Customer Support.
10. There may be a trace of smoke or odor when the unit is first operated. This indicates that a drop of oil fell on the heating coil during the manufacturing process. It will quickly evaporate and should not re-occur.

Location Safety

1. Do not use outdoors.
2. Ensure the heater is on a stable, secure surface to eliminate the potential of tipping it over.
3. Keep combustible materials, such as furniture, pillows, bedding, papers, clothes, and curtains at least 3 feet (0.9 m) from the front of the heater and keep them away from the sides and rear.
4. A heater has hot and arcing or sparking parts inside. Do not use it in areas where gasoline, paint, or flammable liquids are used or stored.
5. To prevent a possible fire, do not block air intakes or exhaust in any manner. Do not use on soft surfaces, like a bed, where openings may become blocked.
6. This heater is not intended for use in bathrooms, laundry areas and similar indoor locations. Never locate heater where it may fall into a bathtub or other water container.

Electricity Safety

1. Always unplug heater when not in use.
2. Do not operate any heater with a damaged cord or plug or after the heater malfunctions, has been dropped or damaged in any manner. Discard heater, or return to authorized service facility for examination and/or repair.
3. Do not run cord under carpeting. Do not cover cord with throw rugs, runners, or similar coverings. Do not route cord under furniture or appliances. Arrange cord away from traffic area and where it will not be tripped over.
4. To disconnect heater, turn controls to off, then remove plug from outlet.

5. Always plug heaters directly into a wall outlet/receptacle.
6. Never use with an extension cord or relocatable power tap (outlet/power strip).
7. If there is a loose fit between the plug and the socket or the plug becomes very hot, the socket may need to be replaced. Check with a qualified electrician to replace the socket.
8. It is normal for the plug and cord to feel warm to the touch.
9. A plug or cord which becomes hot to the touch or becomes distorted in shape may be a result of a result of a worn electrical outlet. Worn outlets or receptacles should be replaced prior to further use of the heater. Plugging the heater into a worn outlet / receptacle may result in overheating of the power cord or fire.
10. This appliance has a polarized plug (one prong is wider than the other). To reduce the risk of electric shock, this plug is intended to fit in a polarized plug. If the plug does not fit fully in the outlet, reverse the plug. If it still does not fit, contact a qualified electrician. Do not attempt to rig this safety feature.
11. Hyperthermia can result in death. Symptoms of hyperthermia include high body temperature, headache, nausea, vomiting, tiredness, dizziness,fainting, and rapid pulse. If you begin to experience symptoms related to hyperthermia, turn off the heater and seek medical attention.
12. To avoid excessive room temperatures which can cause hyperthermia: DO NOT leave product running unattended in a confined space around infants, or individuals with reduced physical, sensory, or mental capabilities.
13. Use this heater only as described in this manual. Any other use not recommended by the manufacturer may cause fire, electric shock, or injury to persons.
14. CAUTION – High temperature, keep electrical cords, drapery, and other furnishings at least 3 feet (0.9 m) from the front of the heater and away from the side and rear.

WARNING – Risk of Hyperthermia

DANGER - High temperatures may be generated under certain abnormal conditions. Do not partially or fully cover or obstruct the front of this heater.

WARNING - Risk of Heat Stroke (Hyperthermia)

Hyperthermia can result in death in infants or others.
Use caution to avoid overheating individuals.
Read and follow all instructions before use.

FOR HOUSEHOLD USE ONLY
READ AND SAVE THESE INSTRUCTIONS

Gentle Reminder:

Check the appliance regularly and refer to TROUBLESHOOTING or contact our customer support if it shows any of the following signs:

- Power cord or plug is damaged.
- Loud noise, unusual smell or excessive heat.

Specifications

Model No.	DR-HSH020
Rated Power	1500W
Input	120V~ 60Hz

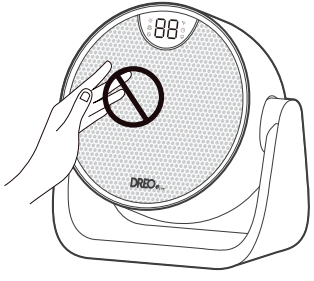

HOT SURFACE

THE FRONT SURFACE CAN BE VERY HOT DURING USE.
DO NOT TOUCH WHEN IN USE.

KNOWING YOUR APPLIANCE

02

Package Contents

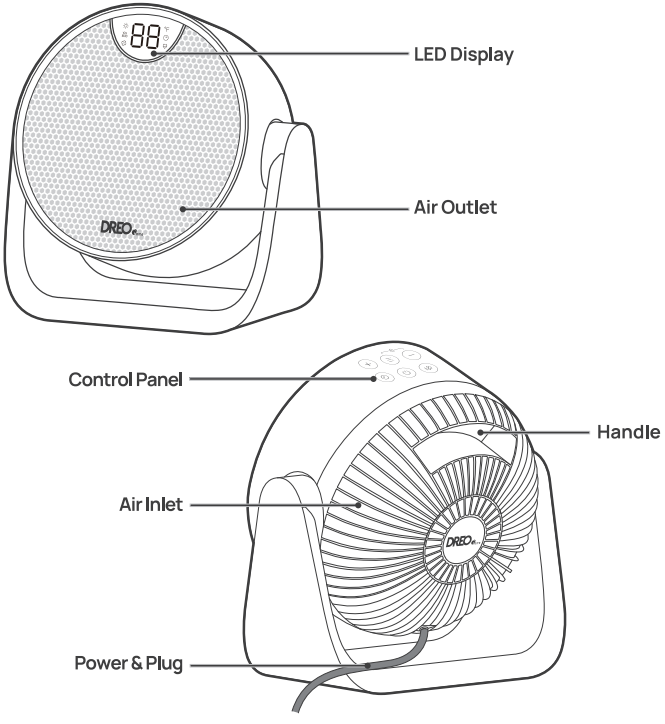

User Manual

Quick Start Guide



Remote Control (battery included)



2x AAA Batteries

USING YOUR APPLIANCE

03

Control Panel



Power Button

Touch to turn the heater on or off.

Note:

When the heater is plugged into the electric outlet, the power indicator will light in red.

Once turned off, a 30-second countdown will show up on the display as the fan will continue to run for 30 seconds to blow out the remaining heat.



Mode Button

Touch to switch between → ECO →

Power heat with three heating levels: H1 (900W),H2 (1300W), H3(1500W).

ECO The heater will automatically select its optimal heating power, depending on the difference between the set temperature (5-35°C) and ambient temperature.

Note:

- When the ambient temperature reaches the set temperature, the heater will turn off automatically in 30 seconds.
- When the ambient temperature drops below the set temperature, the heater will operate on low or high power (900W or 1500W), depending on the difference between the two temperatures.

Fan only mode with three speed levels: F1, F2, F3.

LED Display ON/OFF

Long press for 3 seconds to turn on/off the LED display.



Timer Button

- When the heater is on, touch to set a timer (0-12h) After the timer ends, the heater will turn off automatically.
- To cancel, set the timer to 0 hour.



Mute Button

Press on the control panel to turn on/off the button sounds.

Heat Level/Temperature Buttons

- In Power Heat Mode, touch ⊕ or ⊖ to adjust the heating level.
- In ECO mode, touch ⊕ or ⊖ to adjust the set temperature.
- In Fan only mode, touch ⊕ or ⊖ to adjust the fan speed level.

Note:
In ECO mode, the heater will turn off automatically when the set temperature has been reached. If your heater turns off frequently please raise the set temperature, or switch to Power Heat mode.

Child Lock

Long press ☰ and ⊖ for 3s to activate / deactivate the Child Lock function, when activated, the display will show "LC", and all the buttons on the spcae heater will be locked.

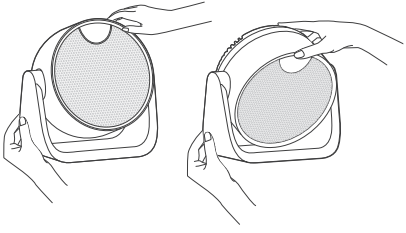

Warning: Hold the bottom or side of the base while adjusting the heater angles to prevent accidental contact with the control panel or the air outlet.

LED Display

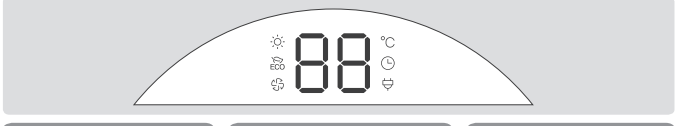

Power Heat	ECO Mode	Fan Only
Timer	Heat Level / Timer Hour / Set Temperature	Plugged In

More Features

Turn on/off the LED Display by using the remote control.

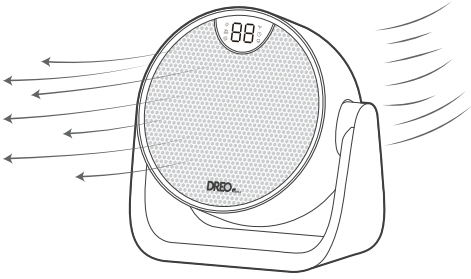

Memory

If the heater is turned OFF or disconnected from power, it will operate under the previous settings (except the Timer setting) when it is turned ON again.

Tip-over Protection

When the heater is tipped over, it will shut off automatically with the error code **"P4"** on the display.

24-Hour Auto Off

This feature is not ON by default.
When this feature is ON, the heater will shut off automatically after continuously running for 24 hours.
Long press the Timer button for 3 seconds to turn this feature ON/OFF when this heater is on standby. The display will show "On" and "OF" respectively.

Overheat Protection

When the heater overheats, it will shut off automatically with the error code "**FF**" on the display.

LED Display On/Off

Turn on/off the LED Display by using the remote control.

Remote Control

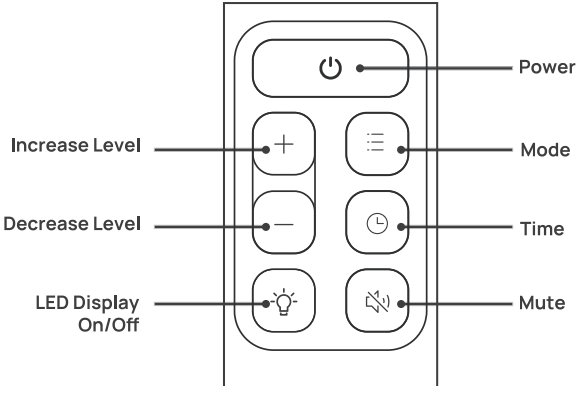

Battery Replacement

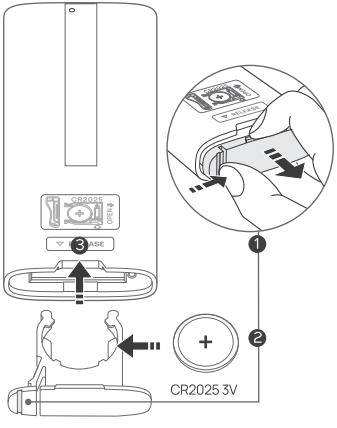

1. Keep the locking tab pressed while pulling out the battery holder from the slot at the back.
2. Replace with the same battery type with the (+) side facing up.
3. Push in the holder until securely locked in place.

Note: If the appliance doesn't respond when using the remote control in close range, please consider replacing the battery.

⚠ WARNING

- **INGESTION HAZARD:** This product contains a button cell or coin battery
- **DEATH** or serious injury can occur if ingested.
- A swallowed button cell or coin battery can cause **Internal Chemical Burns** in as little as **2 hours.**
- **KEEP** new and used batteries **OUT OF REACH of CHILDREN.**
- **Seek immediate medical attention** if a battery is suspected to be swallowed or inserted inside any part of the body.



a) Remove and immediately recycle or dispose of used batteries according to local regulations and keep away from children. Do NOT dispose of batteries in household trash or incinerate.
b) Even used batteries may cause severe injury or death.
c) Call a local poison control center for treatment information.
d) Compatible battery type: CR2025.
e) Battery nominal voltage:3.0 Vdc
f) Non-rechargeable batteries are not to be recharged.
g) Do not force discharge, recharge, disassemble, heat above (rated temperature: 140 °F) or incinerate. Doing so may result in injury due to venting, leakage or explosion resulting in chemical burns.
h) Ensure the batteries are installed correctly according to polarity (+ and -).
i) Do not mix old and new batteries, different brands or types of batteries, such as alkaline, carbon-zinc, or rechargeable batteries.
j) Remove and immediately recycle or dispose of batteries from equipment not used for an extended period of time according to local regulations.
k) Always completely secure the battery compartment. If the battery compartment does not close securely, stop using the product, remove the batteries, and keep them away from children.

CLEANING AND MAINTENANCE

04

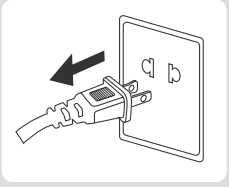

Always turn off and unplug before cleaning.



Outer Surface
Gently wipe off the dust with a soft, dry cloth.

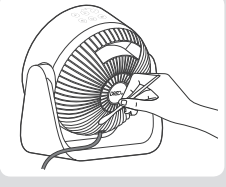

Air Inlet
Use a soft, dry cloth or a cotton-tipped swab to remove any dust from the air inlet.

⚠ ATTENTION



DO NOT unscrew the unit.



DO NOT use cleaning agents.



DO NOT use abrasive scrubbers.



Fire or electrical shock hazard.
DO NOT immerse the main unit in water.
NEVER allow water to get inside the heater.



Except for cleaning, any servicing should be performed by an authorized service representative.



Store in a cool, dry area and keep the cable out of high-traffic areas to avoid tripping hazards.

TROUBLESHOOTING 05

Problem	Possible Causes	Solution
Malfunction codes on LED display	E2 - Temperature sensor short circuit	Unplug it from the power source and contact Customer Support.
	E1 - Temperature sensor open circuit	Unplug it from the power source and contact Customer Support.
	FF - Overheat protection	Unplug and wait for it to cool down before plugging in again.
	P4 - Tip-over protection	Place the heater back on a flat, level and stable surface.
Heater does not start	Overheat protection has been activated.	Unplug and wait for it to cool down before plugging in again.
		Remove any objects on or near the heater.
	No power is passing through the unit.	Ensure that your circuit breaker or fuse is working properly.
		Ensure that your heater is placed on a flat and even surface.
	The set temperature is lower than the ambient temperature.	Ensure that the temperature is set to be higher than the ambient temperature.
The heater suddenly stops during heating	The temperature exceeds the threshold of the thermal cutoff.	Turn off and unplug the unit. Allow it to cool and plug into the electrical outlet again.
	The heater is tipped over.	Place it on a flat, level and stable surface.
	In ECO mode, the heater will turn off automatically when the set temperature has been reached.	This is normal. If your heater turns off frequently, please raise the set temperature, or switch to Power Heat mode.

If your problem is not listed or still persists, please contact our Customer Support (see page 14)

DREO CUSTOMER CARE

06

12-MONTH LIMITED WARRANTY

What is Covered

DREO warrants to you that your product will be free from original defects in materials and workmanship for a period of twelve (12) months from the date of your purchase, when you use your product for intended purposes in accordance with this User Manual.

Please retain your proof of purchase. If you do not retain your proof of purchase, your warranty will start two (2) months from the date of manufacture printed on your product label.

What is Not Covered

This limited warranty only applies to the original purchaser of your product and is non-transferable. This warranty is only valid if your product is used in the country in which you originally purchased it. In addition, this warranty will not apply, and DREO will not be liable for any costs, damages, or repairs, in connection with any of the following:

- Accidents or use of your product with inappropriate force;
- Damage or destruction caused by wrong voltage or unstable electric current;
- Normal wear and tear;
- Careless operation or handling, misuse, abuse, neglect, and/or failure to maintain or use your product in accordance with this User Manual;
- Any partially or completely altered, modified and/or dismantled products;
- Reduction in battery discharge time due to battery age or use (as applicable);
- Products with altered or removed serial numbers;
- Clearing any blockages from the product;
- Purchases from retailers and distributors not authorized by DREO to sell this product;
- Defects caused by or resulting from damages from shipping or handling by any third party not authorized by DREO to ship or handle your product; or
- Defects caused by or resulting from repairs, service, improper maintenance, or alteration to your product or any of its components by anyone other than a repair person authorized by DREO.

Any service and customer support that DREO provides to you under this limited warranty will not extend the duration of this limited warranty.

Warranty Limitations and Exclusions

ANY IMPLIED WARRANTIES RELATING TO YOUR PRODUCT, INCLUDING BUT NOT LIMITED TO THE WARRANTY OF MERCHANTABILITY AND THE WARRANTY OF FITNESS FOR A PARTICULAR PURPOSE, ARE LIMITED TO THE DURATION OF THE LIMITED WARRANTY SET FORTH ABOVE AND ARE OTHERWISE DISCLAIMED.

THIS LIMITED WARRANTY SHALL BE THE SOLE REMEDY OF THE PURCHASER OR USER OF THE PRODUCT, AND DREO SHALL NOT BE LIABLE FOR AN ALLEGEDLY DEFECTIVE OR DAMAGED PRODUCT EXCEPT TO REPAIR OR REPLACE IT IN ACCORDANCE WITH THIS LIMITED WARRANTY. DREO WILL NOT BE LIABLE FOR SPECIAL, INCIDENTAL, INDIRECT, CONTINGENT, OR CONSEQUENTIAL DAMAGES OR LOSSES OF ANY NATURE THAT YOU MAY INCUR IN CONNECTION WITH YOUR PURCHASE OR USE OF YOUR PRODUCT.

Some jurisdictions do not allow limitations on how long an implied warranty lasts or the exclusion or limitation of incidental or consequential damages, so the above limitations or exclusions may not apply to you. This limited warranty gives you specific legal rights, and you also may have other rights which vary from jurisdiction to jurisdiction.

Limited Remedies

If your product fails because of an original defect in material and/or workmanship during the warranty period, DREO will repair or replace (in DREO's sole discretion) your product.

To obtain warranty service on your product, contact us at support@dreo.com or at (888) 290-1688 (available from Monday-Friday, 9:00 AM-5:00 PM PST/PDT) for further instructions.

IN THE EVENT OF AN ORIGINAL DEFECT IN MATERIAL AND/OR WORKMANSHIP, TO THE EXTENT PERMITTED BY LAW, THE REMEDIES SET FORTH IMMEDIATELY ABOVE ARE YOUR SOLE AND EXCLUSIVE REMEDIES.

FCC Statement

This device complies with Part 15 of the FCC Rules.Operation is subject to the following two conditions: (1) this device may not cause harmful interference, and (2) this device must accept any interference received, including interference that may cause undesired operation.

Please note that changes or modifications of this product is not expressly approved by the party responsible for compliance could void the user's authority to operate the equipment.

NOTE: This equipment has been tested and found to comply with the limits for a Class B digital device, pursuant to Part 15 of the FCC Rules. These limits are designed to provide reasonable protection against harmful interference in a residential installation. This equipment generates, uses and can radiate radio frequency energy and, if not installed and used in accordance with the instructions, may cause harmful interference to radio communications. However, there is no guarantee that interference will not occur in a particular installation.

If this equipment does cause harmful interference to radio or television reception, which can be determined by turning the equipment off and on, the user is encouraged to try to correct the interference by one or more of the following measures:

-Reorient or relocate the receiving antenna.

-Increase the separation between the equipment and receiver.

-Connect the equipment into an outlet on a circuit different from that to which the receiver is connected.

-Consult the dealer or an experienced radio/TV technician for help.

Model No.: DR-HSH024
Rev_1.0_EN

We're Here to Help!

(888) 290-1688 (Mon-Fri, 9:00 am-5:00 pm PST/PDT)

www.dreo.com

support@dreo.com

Hesung Innovation Limited

Unit 32, L1 Floor, Mirror Tower, 61 Mody Road, Tsimshatsui East, Kowloon, Hong Kong,999077

MADE IN VIETNAM

Intertek

www.dreo.com

Looking for help?

Contact us to get expert support.

support@dreo.com (888) 290-1688 www.dreo.com

Mon – Fri, 9:00 am–5:00 pm PST/PDT