Operator's Manual

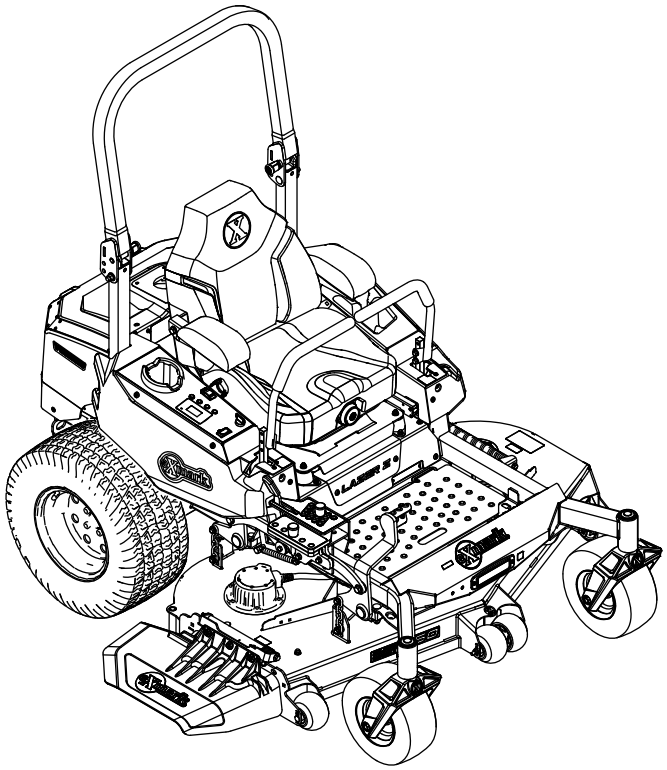

LAZER Z® V-SERIES

For Serial Nos.
416,150,475 & Higher
Part No. 3478-616 Rev. B

⚠ WARNING

CALIFORNIA
Proposition 65 Warning

The power cord on this product contains lead, a chemical known to the State of California to cause birth defects or other reproductive harm. Wash hands after handling.

Battery posts, terminals, and related accessories contain lead and lead compounds, chemicals known to the State of California to cause cancer and reproductive harm. Wash hands after handling.

Use of this product may cause exposure to chemicals known to the State of California to cause cancer, birth defects, or other reproductive harm.

©2025 Exmark Mfg. Co., Inc.
415 Industrial Row
Beatrice, NE 68310

Contact us at www.Exmark.com.
Printed in the USA
All Rights Reserved

Introduction

CONGRATULATIONS on the purchase of your Exmark Mower. This product has been carefully designed and manufactured to give you a maximum amount of dependability and years of trouble-free operation.

This rotary-blade, riding lawn mower is intended to be used by professional, hired operators. It is designed primarily for cutting grass on well-maintained lawns on residential or commercial properties. Using this product for purposes other than its intended use could prove dangerous to you and bystanders.

This manual contains operating, maintenance, adjustment, and safety instructions for your Exmark mower.

BEFORE OPERATING YOUR MOWER, CAREFULLY READ THIS MANUAL IN ITS ENTIRETY.

By following the operating, maintenance, and safety instructions, you will prolong the life of your mower, maintain its maximum efficiency, and promote safe operation.

To maximize safety, performance, and proper operation of this machine, it is essential that all operators carefully read and fully understand the contents of the Operator's manual provided with the product. Failure to comply with the operating instructions or receive proper training may result in injury. Go to https://www.Exmark.com for additional safe operation information, such as safety tips, training materials, and Operator's manuals.

If additional information is needed, or should you require trained mechanic service, contact your authorized Exmark equipment dealer or distributor.

All Exmark equipment dealers and distributors are kept informed of the latest methods of servicing and are equipped to provide prompt and efficient service in the field or at their service stations. They carry ample stock of service parts or can secure them promptly for you from the factory.

All Exmark parts are thoroughly tested and inspected before leaving the factory, however, attention is required on your part if you are to obtain the fullest measure of satisfaction and performance.

Whenever you need service, genuine Exmark parts, or additional information, contact an Authorized Service Dealer or Exmark Customer Service and have the model and serial numbers of your product ready.

Figure 1 identifies the location of the model and serial numbers on the product. Write the numbers in the space provided.

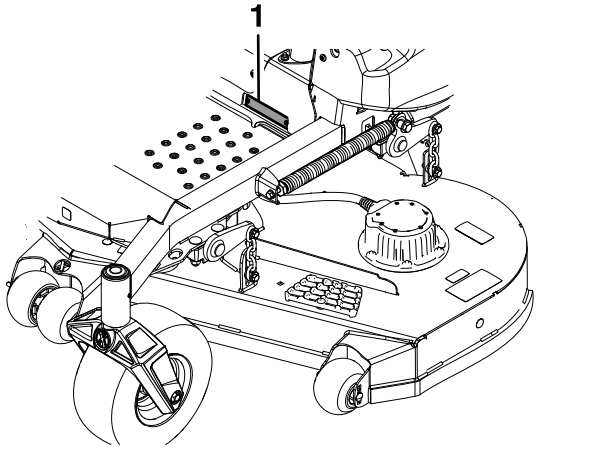

Figure 1

1. Model and serial number location

Model No. _____

Serial No. _____

For complete warranty details, see https://www.Exmark.com. You may also call us 402-223-6375 to request a written copy of the product's warranty.

Original Instructions (EN)

Contents

Introduction 3
Safety 5
General Machine Safety Warnings 5
Lawn Mower Safety Warnings 6
Additional Safety Messages 7
Safety-Alert Symbol 7
General Safety 7
Safety and Instructional Decals 8
Specifications 15
Systems 15
Dimensions 16
Torque Requirements 17
Product Overview 18
Operation 18
Controls 18
Message Display 21
Message Display Menus 23
Before Operation 26
Before Operation Safety 26
Using the Safety-Interlock System 26
Operating Instructions 28
During Operation Safety 28
Adjusting the Rake of the Mower Deck 34
Monitoring the Battery-System Charge Level 34
After Operation 35
After Operation Safety 35
Battery and Charger Safety 35
General 35
Training 35
Preparation 36
Operation 36
Maintenance and Storage 36
Transporting 37
Transporting the Lithium-Ion Batteries 39
Using the Lithium-Ion Battery Charger 39
Maintenance 43
Maintenance Safety 43
Recommended Maintenance Schedule(s) 43
Periodic Maintenance 44
Servicing the Batteries 45
Maintaining the Battery Charger 45
Check Mower Blades 46
Check Rollover Protections Systems (Roll Bar) Knobs 47
Check Seat Belt 47
Check for Loose Hardware 47
Check Tire Pressures 47
Lubricate Grease Fittings 47
Changing the Transmission Fluid 48
Thread Locking Adhesives 50
Dielectric Grease 50
Adjustments 51
Deck Leveling 51
Adjusting the Blade Slope 52
Replacing the Discharge Deflector 53
Motion Control Neutral Lock Pivot Adjustment 54
Motion Control Handle Adjustment 54
Calibrating the Levers 54
Adjusting the Tracking 55
Caster Pivot and Gauge Wheel Pivot Bearings Pre-Load Adjustment 56
Cleaning 58
Cleaning under the Mower Deck 58
Disposing of Waste 58
Storage 59
Cleaning and Storage 59
Battery Storage Requirements 59
Storing the Charger 60
Troubleshooting 61
Schematics 63
California Proposition 65 Warning Information 64

Safety

General Machine Safety Warnings

WARNING—Read all safety warnings, instructions, illustrations and specifications provided with this machine.

Failure to follow the warnings and instructions may result in electric shock, fire and/or serious injury.

The term "machine" in all of the warnings listed below refers to your mains-operated (corded) machine or battery-operated (cordless) machine.

1. **Work area safety**

   A. **Keep work area clean and well lit.** *Cluttered or dark areas invite accidents.*

   B. **Do not operate the machine in explosive atmospheres, such as in the presence of flammable liquids, gasses, or dust.** *The machine creates sparks, which may ignite the dust or fumes.*

   C. **Keep children and bystanders away while operating the machine.** *Distractions can cause you to lose control.*

2. **Electrical safety**

   A. **Machine plugs must match the outlet. Never modify the plug in any way. Do not use any adapter plugs with an earthed (grounded) machine.** *Unmodified plugs and matching outlets will reduce risk of electric shock.*

   B. **Avoid body contact with earthed or grounded surfaces, such as pipes, radiators, ranges, and refrigerators.** *There is an increased risk of electric shock if your body is earthed or grounded.*

   C. **Do not expose the machine to rain or wet conditions.** *Water entering a machine will increase the risk of electric shock.*

   D. **Do not abuse the cord. Never use the cord for carrying, pulling or unplugging the machine. Keep cord away from heat, oil, sharp edges, or moving parts.** *Damaged or entangled cords increase the risk of electric shock.*

   E. **When operating the machine outdoors, use an extension cord suitable for outdoor use.** *Use of a cord suitable for outdoor use reduces the risk of electric shock.*

   F. **If operating the machine in a damp location is unavoidable, use a residual current device (RCD) protected supply.** *Use of an RCD reduces the risk of electric shock.*

3. **Personal safety**

   A. **Stay alert, watch what you are doing, and use common sense when operating the machine. Do not use the machine while you are tired or under the influence of drugs, alcohol, or medication.** *A moment of inattention while operating the machine may result in serious personal injury.*

   B. **Use personal protective equipment. Always wear eye protection.** *Protective equipment such as a dust mask, non-skid safety shoes, or hearing protection used for appropriate conditions will reduce personal injuries.*

   C. **Prevent unintentional starting. Ensure the switch is in the off-position before connecting to power source and/or battery pack.** *Energising a machine that has the switch on invites accidents.*

   D. **Remove any adjusting key or wrench before turning the machine on.** *A wrench or a key left attached to a rotating part of the machine may result in personal injury.*

   E. **Do not overreach. Keep proper footing and balance at all times.** *This enables better control of the machine in unexpected situations.*

   F. **Dress properly. Do not wear loose clothing or jewelry. Keep your hair and clothing away from moving parts.** *Loose clothes, jewelry or long hair can be caught in moving parts.*

   G. **If devices are provided for the connection of dust extraction and collection facilities, ensure these are connected and properly used.** *Use of dust collection can reduce dust-related hazards.*

   H. **Do not let familiarity gained from frequent use of the machine allow you to become complacent and ignore machine safety principles.** *A careless action can cause severe injury within a fraction of a second.*

4. **Machine use and care**
   - A. **Do not force the machine. Use the correct machine for your application.** *The correct machine will do the job better and safer at the rate for which it was designed.*
   - B. **Do not use the machine if the switch does not turn it on and off.** *Any machine that cannot be controlled with the switch is dangerous and must be repaired.*
   - C. **Disconnect the plug from the power source and/or remove the battery pack, if detachable, from the machine before making any adjustments, changing accessories, or storing the machine.** *Such preventive safety measures reduce the risk of starting the machine accidentally.*
   - D. **Store an idle machine out of the reach of children and do not allow persons unfamiliar with the machine or these instructions to operate the machine.** *A machine is dangerous in the hands of untrained users.*
   - E. **Maintain the machine and accessories. Check for misalignment or binding of moving parts, breakage of parts and any other condition that may affect the operation of the machine. If damaged, have the machine repaired before use.** *Many accidents are caused by a poorly maintained machine.*
   - F. **Keep cutting tools sharp and clean.** *Properly maintained cutting tools with sharp cutting edges are less likely to bind and are easier to control.*
   - G. **Use the machine, accessories, and tool bits etc., in accordance with these instructions, taking into account the working conditions and the work to be performed.** *Use of the machine for operations different from those intended could result in a hazardous situation.*
   - H. **Keep handles and grasping surfaces dry, clean and free from oil and grease.** *Slippery handles and grasping surfaces do not allow for safe handling and control of the machine in unexpected situations.*
5. **Battery machine use and care**
   - A. **Recharge only with the charger specified by a manufacturer.** *A charger that is suitable for one type of battery pack may create a risk of fire when used with another battery pack.*
   - B. **Use the machine only with specifically designated batteries.** *Use of any other batteries may create a risk of injury and fire.*
   - C. **When battery pack is not in use, keep it away from other metal objects, like paper clips, coins, keys, nails, screws or other small metal objects, that can make a connection from one terminal to another.** *Shorting the battery terminals together may cause burns or a fire.*
   - D. **Under abusive conditions, liquid may be ejected from the battery; avoid contact. If contact accidentally occurs, flush with water. If liquid contacts eyes, additionally seek medical help.** *Liquid ejected from the battery may cause irritation or burns.*
   - E. **Do not use a battery pack or machine that is damaged or modified.** *Damaged or modified batteries may exhibit unpredictable behavior resulting in fire, explosion or risk or injury.*
   - F. **Do not expose a battery pack or machine to fire or excessive temperature.** *Exposure to fire temperature above 130°C (265°F) may cause an explosion.*
   - G. **Follow all charging instructions and do not charge the battery pack or machine outside the temperature range specified in the instructions.** *Changing improperly or at temperatures outside the specified range may damage the battery and increase the risk of fire.*
6. **Service**
   - A. **Have your machine serviced by a qualified repair person using only identical replacement parts.** *This will ensure that the safety of the machine is maintained.*
   - B. **Never service damaged battery packs.** *Service of battery packs should be performed only by the manufacturer or authorized service providers.*

Lawn Mower Safety Warnings

1. **Do not use the lawnmower in bad weather conditions, especially when there is a risk of lightning.** *This decreases the risk of being struck by lightning.*
2. **Thoroughly inspect the area for wildlife where the lawnmower is to be used.** *Wildlife may be injured by the lawnmower during operation.*

3. **Thoroughly inspect the area where the lawnmower is to be used and remove all stones, sticks, wires, bones, and other foreign objects.** *Thrown objects can cause personal injury.*
4. **Before using the lawnmower, always visually inspect to see that the blade and the blade assembly are not worn or damaged.** *Worn or damaged parts increase the risk of injury.*
5. **Keep guards in place. Guards must be in working order and be properly mounted.** *A guard that is loose, damaged, or is not functioning correctly may result in personal injury.*
6. **Keep all cooling air inlets clear of debris.** *Blocked air inlets and debris may result in overheating or risk of fire.*
7. **While operating the lawnmower, always wear non-slip and protective footwear. Do not operate the lawnmower when barefoot or wearing open sandals.** *This reduces the chance of injury to the feet from contact with the moving blade.*
8. **While operating the lawnmower, always wear long trousers.** *Exposed skin increases the likelihood of injury from thrown objects.*
9. **Do not operate the lawnmower on slopes greater than 15°.** *This reduces the risk of loss of control, slipping, and rollover which may result in personal injury.*
10. **Exercise extreme caution when working on slopes.** *This reduces the risk of loss of control, slipping, and rollover which may result in personal injury.*
11. **Use extreme caution when reversing the lawnmower.** *Always be aware of your surroundings.*
12. **Do not touch blades and other hazardous moving parts while they are still in motion.** *This reduces the risk of injury from moving parts.*
13. **When clearing jammed material or cleaning the lawnmower, make sure all power switches are off, and remove the key.** *Unexpected operation of the lawnmower may result in serious personal injury.*

Save all warnings and instructions for future reference.

Additional Safety Messages

Safety-Alert Symbol

The safety-alert symbol (Figure 2) shown in this manual and on the machine identifies important safety messages that you must follow to prevent accidents.



g000502

Figure 2
Safety-alert symbol

The safety-alert symbol appears above information that alerts you to unsafe actions or situations and is followed by the word **DANGER**, **WARNING**, or **CAUTION**.

DANGER indicates an imminently hazardous situation which, if not avoided, **will** result in death or serious injury.

WARNING indicates a potentially hazardous situation which, if not avoided, **could** result in death or serious injury.

CAUTION indicates a potentially hazardous situation which, if not avoided, **may** result in minor or moderate injury.

This manual uses two other words to highlight information. **Important** calls attention to special mechanical information and **Note** emphasizes general information worthy of special attention.

General Safety

This product is capable of amputating hands and feet and of throwing objects. Always follow all safety instructions to avoid serious personal injury or death.

- Keep clear of the discharge opening.
- Allow only responsible and physically capable people to operate the machine.
- Shut off the machine, remove the key, and wait for all moving parts to stop before leaving the operator's position. Allow the machine to cool before servicing, adjusting, or cleaning it.

Safety and Instructional Decals

- Keep all safety signs legible. Remove all grease, dirt and debris from safety signs and instructional labels.
- Replace all worn, damaged, or missing safety signs.
- When replacement components are installed, be sure that current safety signs are affixed to the replaced components.
- If an attachment or accessory has been installed, make sure current safety signs are visible.
- New safety signs may be obtained from your authorized Exmark equipment dealer or distributor or from Exmark Mfg. Co. Inc.
- Safety signs may be affixed by peeling off the backing to expose the adhesive surface. Apply only to a clean, dry surface. Smooth to remove any air bubbles.
- Familiarize yourself with the following safety signs and instruction labels. They are critical to the safe operation of your Exmark commercial mower.

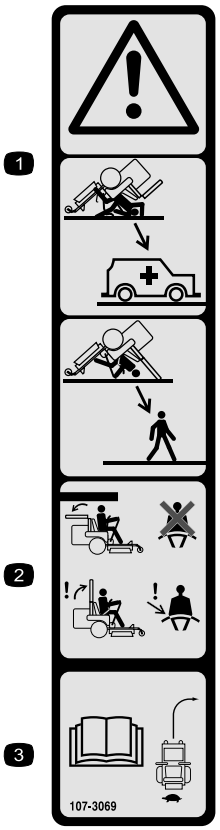

decal107-3069

107-3069

1. Warning-there is no rollover protection when the roll bar is down.
2. To avoid injury or death from a rollover accident, keep the roll bar in the fully raised and locked position and wear the seat belt. Lower the roll bar only when absolutely necessary; do not wear the seat belt when the roll bar is down.
3. Read the Operator's manual; drive slowly and carefully.

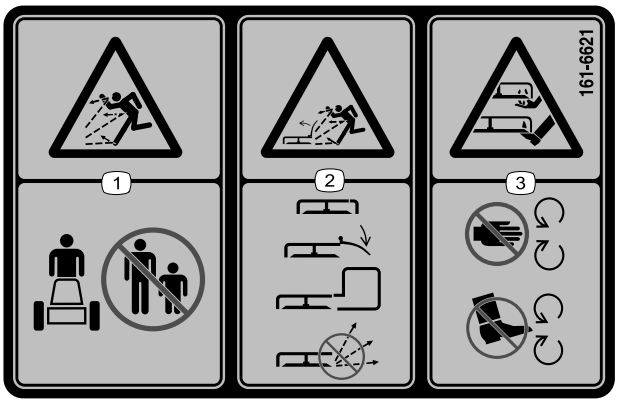

decal161-6621

161-6621

1. Thrown object hazard—keep bystanders away from the machine.
2. Thrown object hazard, raised deflector—lower the deflector before operating the machine; always operate the machine with the deflector, discharge cover, or grass collection system in place; do not operate the machine with the discharge opening uncovered.
3. Severing hazard of hand or foot—keep hands and feet away from moving parts.

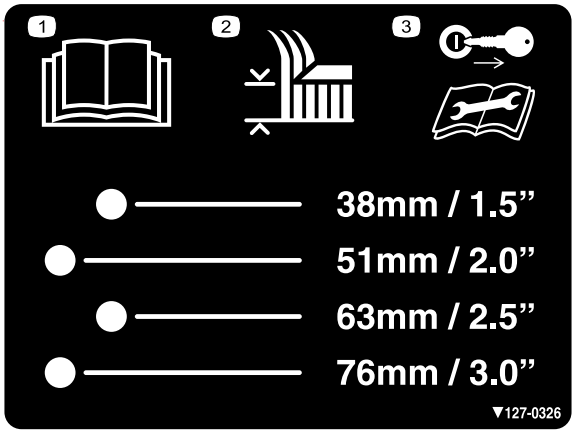

decal127-0326

127-0326

1. Read the *Operator's Manual*.
2. Height of cut
3. Remove the key and read the *Operator's Manual* before performing maintenance.



decal133-8061

133-8061

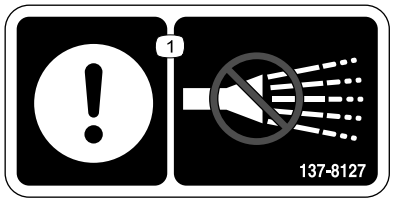

decal137-8127

137-8127

1. Attention—do not spray with high-pressure water.

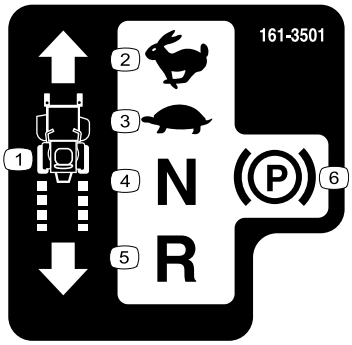

decal161-3501

161-3501

1. Traction controls
2. Fast
3. Slow
4. Neutral
5. Reverse
6. Parking brake

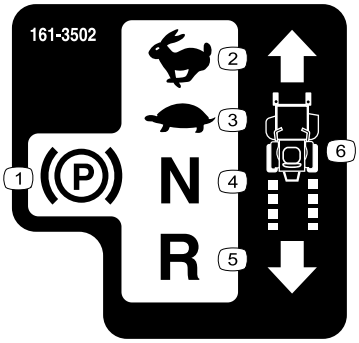

decal161-3502

161-3502

1. Parking brake
2. Fast
3. Slow
4. Neutral
5. Reverse
6. Traction controls



decal144-0275

144-0275

1. Batteries are flammable

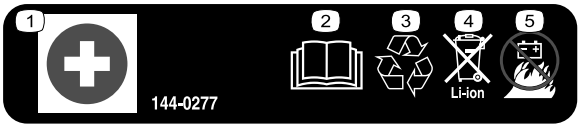

decal144-0277

144-0277

1. Positive terminal
2. Read the *Operator's Manual*.
3. Recycle the battery.
4. Do not dispose improperly.
5. Do not expose to fire.

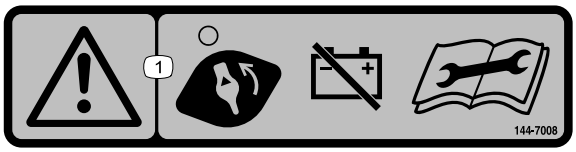

decal144-7008

144-7008

1. Warning—turn the battery-disconnect switch to the Off position before performing maintenance.

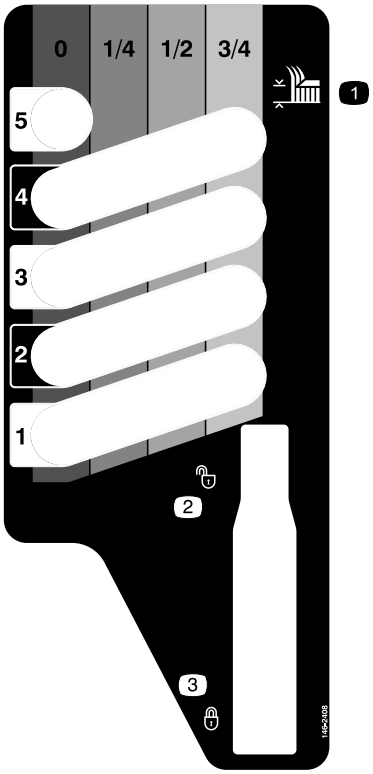

decal146-2408

146-2408

1. Height of cut
2. Unlock
3. Lock

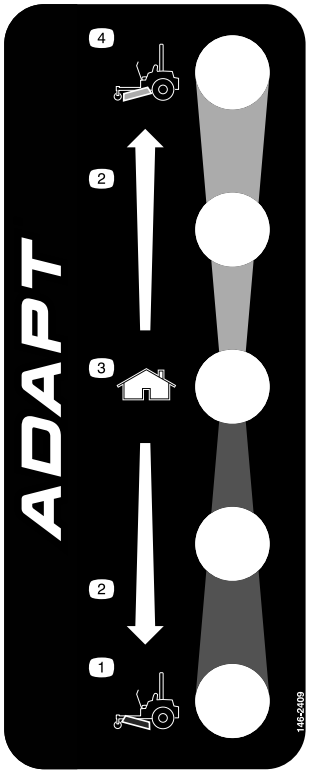

decal146-2409

146-2409

1. Negative rake
2. Increase
3. Home
4. Positive rake

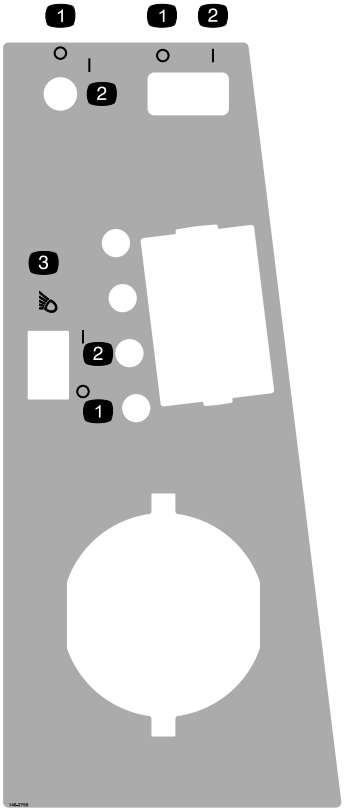

decal146-2750

146-2750

1. Off
2. On
3. Light

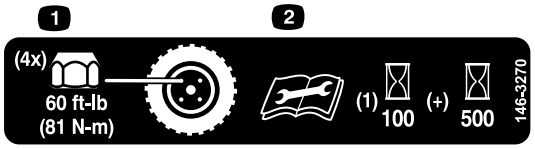

decal146-3270

146-3270

1. Wheel lug nut torque 60 ft-lb (81 N-m) (4x)
2. Read and understand the Operator's manual before performing any maintenance, check torque after first 100 hours then every 500 hours thereafter.

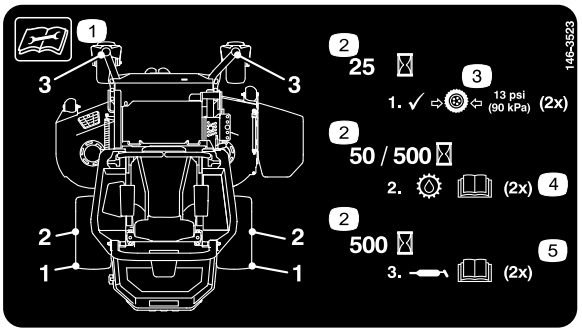

decal146-3523

146-3523

1. Read the instructions before servicing or performing maintenance
2. Time interval
3. Check tire pressure (2 locations)
4. Service the transmission oil; refer to the Operator's manual or further instructions (2 locations)
5. Grease the caster pivots; refer to the Operator's manual for further instructions (2 locations)

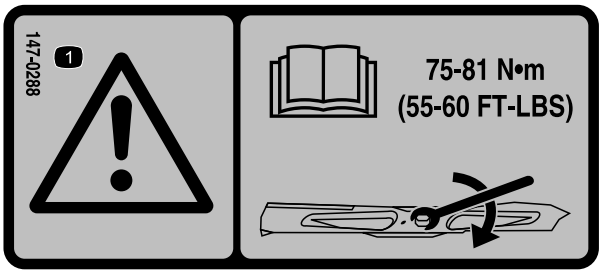

decal147-0288

147-0288

1. Warning—read the *Operator's Manual* for instructions on torquing the blade bolt/nut to 75 to 81 N·m (55 to 60 ft-lb).

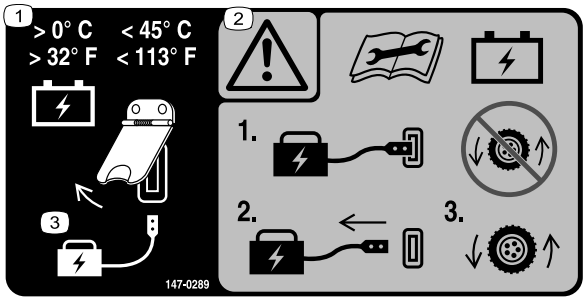

decal147-0289

147-0289

1. Keep the battery at a temperature above 0°C (32°F) and below 45°C (113°F)
2. Warning—read the *Operator's Manual* before performing battery maintenance; do not operate the machine when the battery charger is connected; disconnect the battery charger before operating the machine.
3. Lift the cover to charge the battery.

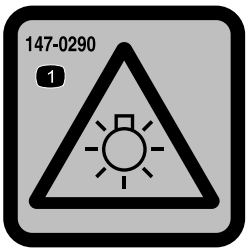

decal147-0290

147-0290

1. Warning—light is bright; do not look directly into the light.

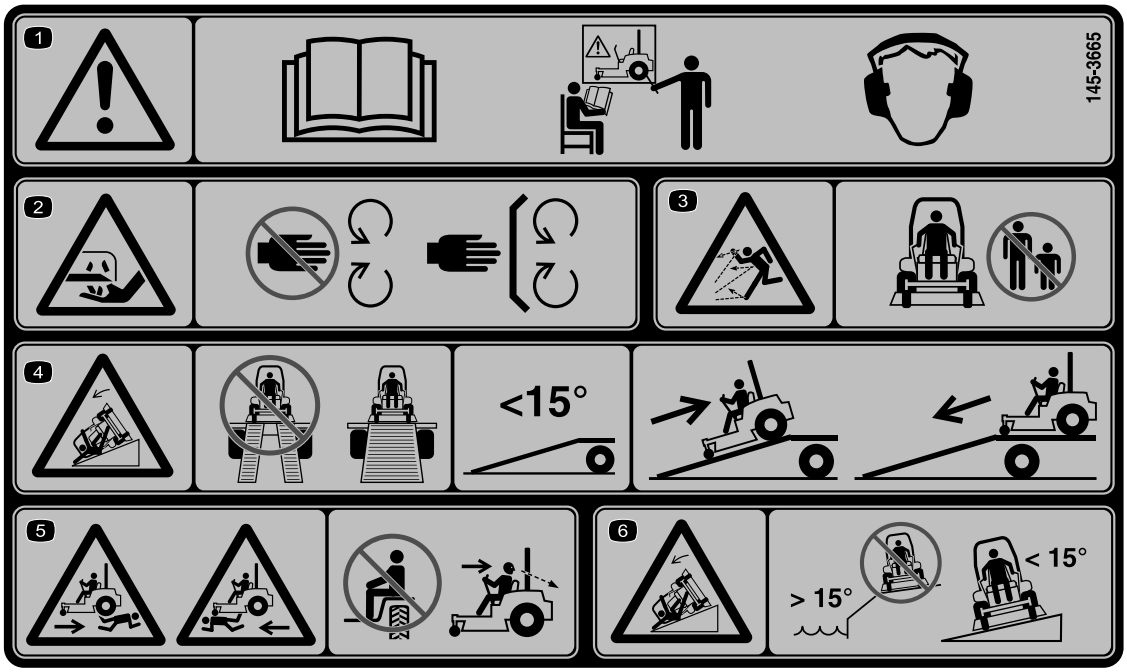

decal145-3665

145-3665

This machine complies with the industry standard stability test in the static lateral and longitudinal tests with the maximum recommended slope indicated on the decal. It is important that each operator review the slope operation instructions in the operator's manual and review the conditions in which the machine is being operated to determine if the machine may be operated in the conditions that day and on that site. Changes to terrain can result in a change in slope operation for any machine.

1. Warning—read the *Operator's Manual*; all operators should be trained before operating the machine; wear hearing protection.
2. Cutting/dismemberment hazard of the fingers—keep hands away from moving parts; keep all guards and shields in place.
3. Thrown object hazard—keep bystanders away.
4. Tipping hazard—when loading onto a trailer, do not use dual ramps; only use a singular ramp wide enough for the machine and that has an incline less than 15°; back up the ramp (in reverse) and drive forward off the ramp.
5. Runover/backover hazard—do not carry passengers; look behind you and down when mowing in reverse.
6. Tipping hazard on slopes—do not use on slopes near open water; do not use on slopes greater than 15°.

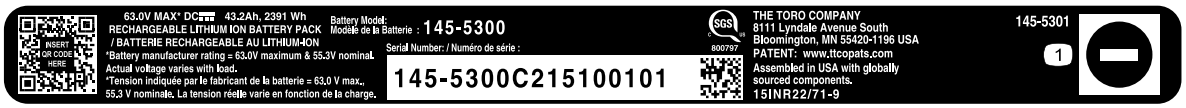

decal145-5301

145-5301

1. Negative battery terminal



decal145-5338

145-5338

1. Warning—read the *Operator's Manual*.
2. Warning—do not open the battery; do not use a damaged battery.
3. Explosion hazard—do not expose to sparks or open flame.
4. Electric shock hazard—do not perform maintenance on the battery.
5. Electric shock hazard

Specifications

Systems

Electrical System

Battery Quantity	10
Rated Voltage	63 VDC maximum and 55.2 VDC nominal usage
Amp Hours	414 Ah

Fuses:

- 200 amp drive motor
- 200 amp deck motor
- 10 amp DC/DC module fuse
- 7.5 amp system fuse
- 5 amp TEC power fuse (qty: 2)
- 5 amp accessory fuse
- 2 amp Telematics fuse
- 2 amp TEK logic fuse

Safety Interlock System

- LCD indicators appear for the park brake, drive levers, and operator presence in the message display on the RH control panel.

  Note: Because the PTO must be disengaged to start the machine, the LCD indicator will not illuminate at this time.
- Operator must be in seat when PTO is engaged, brake is disengaged, or motion control levers are moved in or machine will stop.
- Mower blades will stop if the right and/or left side motion control lever is moved or released into the neutral lock or park brake position.

Operator Controls

- Steering and Motion Control:

  Note: Motion control levers are adjustable to two heights.
  - Separate levers, on each side of the console, control speed and direction of travel of the respective drive wheels.
  - Steering is controlled by varying the position of the levers relative to each other.
  - Moving motion control levers outward (in slots) locks the drive system in neutral and sets the park brake.
- PTO Engagement Switch: Engages/Disengages mower blades.
- Deck Height Adjustment Pin: Sets cutting height to desired position.
- Deck Rake Adjustment Pin: Sets deck rake to desired position.
- Deck Lift Pedal: Foot pedal that lifts deck.
- Transport Lock:
  - Latching position: Automatically latches at the transport position.
  - Unlatching position: Deck does not latch at the transport position.
- Light Switch: Turns front light on/off.

Seat

- Seat Type: Standard seat with high back, extra wide foam padded seat cushion with internal suspension, thick bolstering, two-tone cover, padded flip-up armrests, integral safety switch, and Seat Isolation System for reduced vibration, to enhance ride of standard seat.
- Mounting: Adjustable fore and aft on seat tracks.
- Seat Safety Switch: Integrated seat switch. Time delay seat switch eliminates rough ground cut-outs.

Tires and Wheels

Drive	
Pneumatic (Air filled)	
Quantity	2
Tread	Turf Traction
Size	24 x 12.00-12
Ply Rating	4
Pressure	13 psi (90 kPa)

Front Caster	
Semi-Pneumatic	
Quantity	2
Tread	Smooth
Size	13 x 6.50-6

Cutting Deck

- Cutting Width: 60 inch Deck: (152.4 cm)
- Discharge: Side
- Blade Size: (3 ea.): 20.50 inches (52.1 cm)
- Deck: Full floating deck is attached to out-front support frame. Four anti-scalp rollers provide maximum turf protection. Deck design allows for bagging, mulching or side discharge.
- Deck Depth: 5.5 inches (14 cm)
- Cutting Height Adjustment: Foot activated lever is used to adjust the cutting height from 1 inch (2.5 cm) to 5 inches (12.7 cm) in 1/4 inch (6.4 mm) increments.
- Mulching Kit: Optional.

Dimensions

Overall Width

Without Deck	55.1 inches (140 cm)
Deflector Up	64.8 inches (164.6 cm)
Deflector Down	75.4 inches (191.5 cm)

Overall Length:

	60 inch Deck
Roll Bar - Up	82.1 inches (208.5 cm)
Roll Bar - Down	82.9 inches (210.6 cm)

Overall Height:

Roll Bar - Up	**Roll Bar - Down**
70.7 inches (179.6 cm)	49.8 inches (126.5 cm)

Tread Width: (Center to Center of Tires, Widthwise)

Drive Wheels	44.0 inches (111.8 cm)
Caster Wheels	39.5 inches (100.3 cm)

Wheel Base: (Center of Caster Tire to Center of Drive Tire)

52.1 inches (132.3 cm)

Curb Weight:

1432 lb (649.5 kg)

Torque Requirements

Bolt Location	Torque
Motor Mounting Screws	22-28 ft-lb (30-38 N-m)
Blade Mounting Bolt (lubricate with anti-seize)	55-60 ft-lb (75-81 N-m)
Anti-Scalp Roller Nyloc Nut (See Figure 36 and Figure 37)	27-33 ft-lb (37-45 N-m)
Wheel Lug Nuts	55-65 ft-lb (75-88 N-m)
Wheel Motor Mounting Bolts	27-33 ft-lb (37-45 N-m)
Rollover Protection System (Roll Bar) 1/2 inch Mounting Bolts	100-110 ft-lb (136-149 N-m)
Front Deck Strut to Frame Bolt	27-33 ft-lb (37-45 N-m)

Product Overview

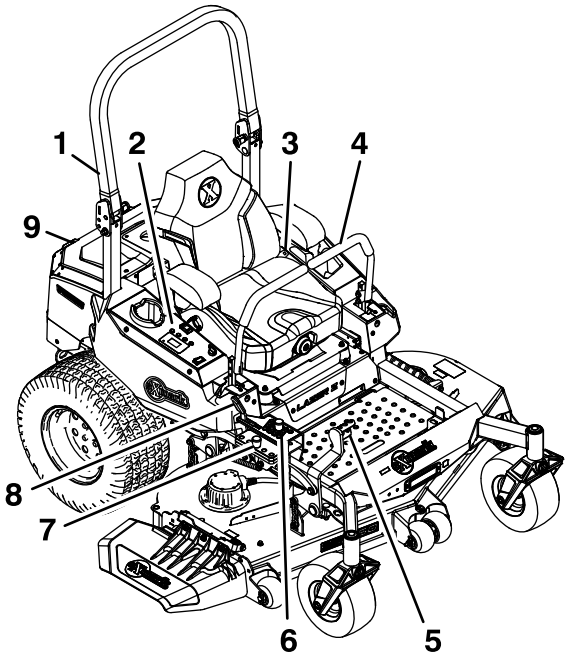

g459979

Figure 3

1. Rollover Protection System (ROPS)
2. Controls (right console)
3. Seat belt
4. Motion control levers
5. Deck lift pedal
6. Height of cut positions
7. Rake adjustment
8. Transport lock lever
9. Battery compartment

Operation

Note: Determine the left and right sides of the machine from the normal operating position.

Controls

Become familiar with all the controls before starting the motor and operating the machine.

Motion Control Levers

The motion control levers are located on each side of the console and control the forward and reverse motion of the machine (Figure 4).

Moving the levers forward or backward turns the wheel on the same side forward or reverse respectively. Wheel speed is proportional to the amount the lever is moved.

Moving the levers outward from the center position into the T-slot locks them in the park brake position.

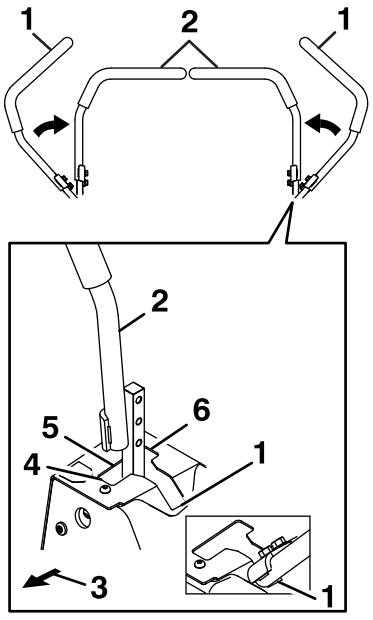

g440365

Figure 4

1. Park brake (handles out)
2. Neutral operate position (handles in)
3. Front of machine
4. Forward
5. Neutral
6. Reverse

Park Brake Position

Moving the levers outward from the center position into the T-slot engages an electric parking brake on the drive wheels (Figure 4 and Figure 5).

Always move the motion control levers to the Park position when you stop the machine or leave it unattended.

The machine must be tied down and brake engaged when transporting.

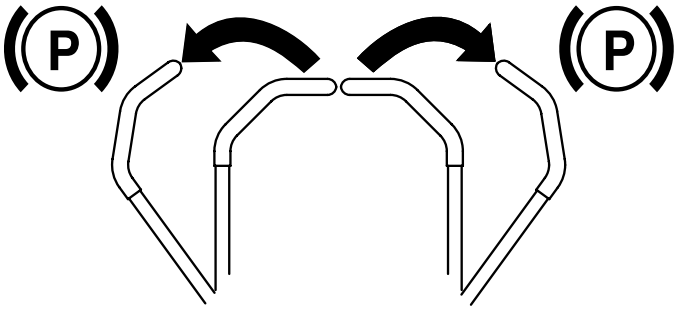

g398314

Figure 5

Key Switch

Located on right console.

The key switch has two positions "ON" and "OFF". Use the key switch to turn on or shut off the machine; refer to **Starting the Machine** (page 30) and **Stopping the Machine** (page 31).

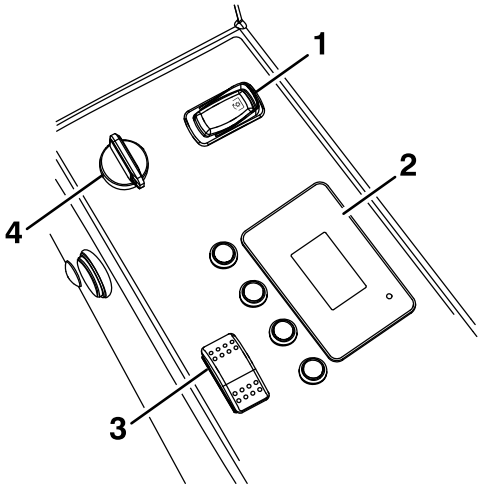

g460015

Figure 6

1. PTO engagement switch
2. Message display
3. Light switch
4. Key switch

Important: PTO must be disengaged before the key is turned off.

Note: Brake must be engaged and PTO switch disengaged to start the machine. (It is not necessary for the operator to be in the seat to start the machine).

Note: The LCD indicators appear when each control meets the "safe to start" mode (e.g. the indicator turns on when the operator is in the seat).

Light Switch

Located on right console.

Press down on the front of the switch to turn on the light. Press the back of the switch to turn off the light.

Drive Wheel Motor Release

Located in the center of each drive wheel motor hub; see **Moving a Non-Functioning Machine** (page 36).

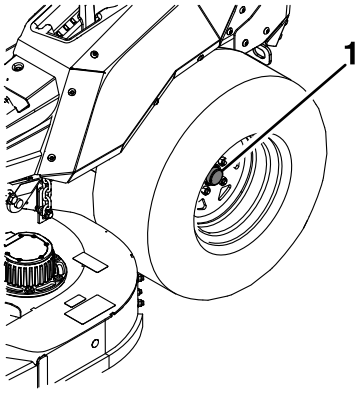

g399003

Figure 7

1. Motor hub

PTO Engagement Switch

Located on right console (see Figure 6).

Pushing down on the front of the switch (right side) will put the PTO in the "ON" (engage) position. Pushing down on the back of the switch (left side) will put the PTO in the "OFF" (disengage) position.

Important: PTO must be disengaged before the key is turned off.

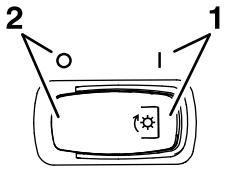

g463193

Figure 8

1. "ON" (engage)
2. "OFF" (disengage)

Deck Lift Pedal

Located at the right front corner of the floor pan.

Push the pedal forward with your foot to raise the cutting deck. Allow the pedal to move rearward to lower the cutting deck to the cut height that has been set.

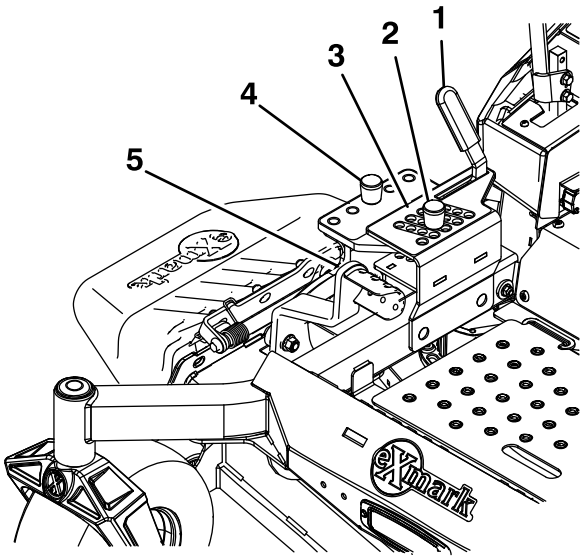

g460000

Figure 9

1. Transport lock lever
2. Height adjustment pin
3. Height of cut decal
4. Rake adjustment pin
5. Deck foot pedal

Transport Lock Lever

Located in front of the RH motion control lever (see Figure 9).

The transport latching position will automatically engage when the deck is raised to the transport position. To release the deck from the transport position: push the foot pedal to remove the load from the transport latching mechanism, push the lever forward, and allow the pedal to move rearward to lower the cutting deck to the cut height that has been set.

Position in the transport latching position to automatically latch the cutting deck when raised to the transport position.

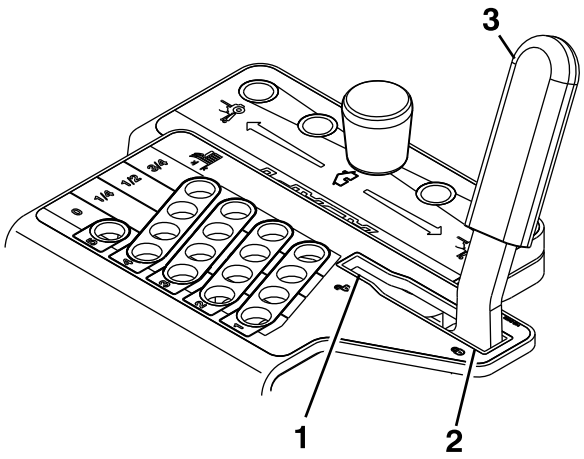

g463191

Figure 10

1. Non-latching position (unlock)
2. Latching position (lock)
3. Transport lock lever

In the non-latching position, the deck will automatically return to the cutting height when the pedal is lowered.

Battery Disconnect Switch

Located on the left rear panel above the drive tire.

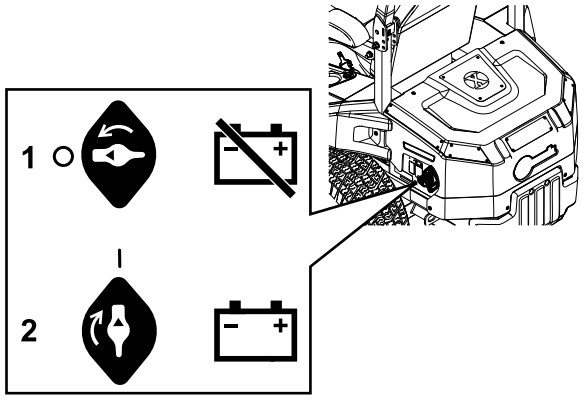

g460831

Figure 11

1. Turn the switch to the Off position to de-energize the machine electrically.
2. Turn the switch to the On position to energize the machine electrically.

Message Display

The LCD message display shows information about your machine, such as the operating status, various diagnostics, and other information about the machine.

- **Splash screen:** shows the battery charge for a few seconds after you move the key to the On position.

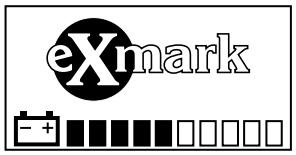

g385386

Figure 12

- **Charging screen:** shows the battery charge percentage and amperage.

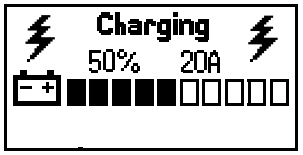

g360797

Figure 13

- **Main information screens:** shows current machine information while the key is in the On position. This screen shows the battery-system charge level and the status of various components. Press the → button to cycle through the screens. Use the – and + buttons to adjust the maximum traction speed and mower blade speed.

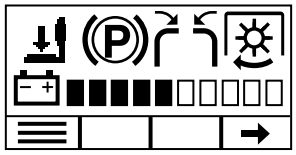

g396675

Figure 14
Safety-interlock indicators

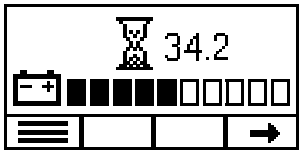

g378466

Figure 15
Operating hours

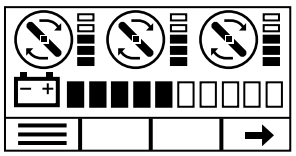

g360794

Figure 16
Mower blade motor status

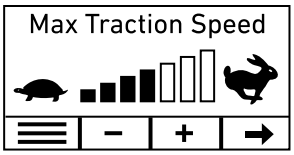

g360795

Figure 17
Traction speed

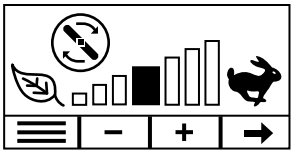

g360796

Figure 18
Mower blade motor speed

Message Display Icon Descriptions

	Next
	Scroll up
	Scroll down
	Enter main menu.
	Change language setting.
	Increase
	Decrease
	Exit menu
	Save
	Operating hours
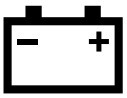	Battery charge
	Operator is off the seat.
	Motion control levers are in the Neutral position.
	Motion control levers are in the unlocked position.
	Parking brake is engaged.
	PTO is engaged.
	Mower blade
	Traction drive
	Fast
	Slow

Message Display Icon Descriptions (cont'd.)

	Energy-saving
	The traction speed or menu item is locked.

Message Display Menus

To access the main menu, press any button while at the main information screens, then press the ☰ button.

Refer to the following tables for a description of the options available from the menus:

Note: 🔒 Protected under Protected Menus—accessible only by entering PIN.

Main Menu

Menu Item	Description
Faults	The Faults menu contains a list of the recent machine faults. Refer to the *Service Manual* or your Authorized Service Dealer for more information on the Faults menu.
Service	The Service menu contains information on the machine such as hours of use and counts, power, lever calibration, and tracking.
Diagnostics	The Diagnostics menu lists various states and data that the machine currently has. You can use this information to troubleshoot certain issues.
Settings	The Settings menu allows you to customize and modify configuration variables on the InfoCenter display.
About	The About menu lists the model number, serial number, and software version (if PIN is entered) of your machine.

Faults

Menu Item	Description
Current	Lists the total number of key-on hours (i.e., hours that the key has been in the On position).
Last	Indicates the last key-on hour that the fault occurred on.
First	Indicates the first key-on hour that the fault occurred on.
Occurrences	Indicates the number of fault occurrences.

Service

Menu Item	Description
Hours	Lists the total number of hours various components have been used: • Key switch • Machine • Traction contactor • Cutter contactor • Neutral • Total mow time • Left traction • Right traction • Limp mode • Transport time
Counts	Lists the counts of various components: • Start cycles • Traction contactor • Cutter contactor • Cutter PTO
Max Speed Range 🔒	Limits the maximum traction speed of the machine; refer to **Adjusting the Maximum Speed Range** (page 49).
Limp Mode	Displays and adjusts the battery percentage before limp mode starts. Refer to **Adjusting the Battery Percentage for Limp Mode** (page 35).
Lever Calibration 🔒	Calibrates the motion-control levers. Refer to **Calibrating the Levers** (page 54).
Tracking	Adjusts the tracking of the motion-control levers. Refer to **Adjusting the Tracking** (page 55).

Diagnostics Menu

Menu Item	Description
Battery Stack	Indicates the inputs and outputs for the batteries.
Battery Cells	Indicates the inputs and outputs for individual batteries.
Cutter Motors	Indicates the inputs and outputs for each cutter motor.
Traction Motors	Indicates the inputs and outputs for each traction motor.

Settings

Menu Item	Description
Language	Controls the language used on the message display.
Backlight	Controls the brightness of the LCD display.
Contrast	Controls the contrast of the LCD display.
Protected Menus	Allows you to access protected menus by inputting a passcode.

About

Menu Item	Description
Model	Displays the model number of the machine.
SN	Displays the serial number of the machine.
Main Controller 🔒	Displays the software part number and revision of the main controller.
Display Controller 🔒	Displays the software part number and revision of the display controller.
Traction Motors 🔒	Displays the software part number and revision of the traction motors.
Cutter Motors 🔒	Displays the software part number and revision of the cutter motors.
Battery Packs 🔒	Displays the software part number and revision of the battery packs.

Accessing Protected Menus

Note: The factory default PIN code for your machine is 1234.

If you changed the PIN code and forgot the code, contact your Authorized Service Dealer for assistance.

Note: The message displays only two items at a time; however, the following figures show the full menus for context.

1. In the Main menu, scroll down to Settings and press the → button.

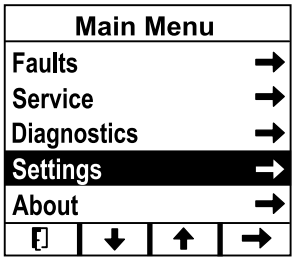

Figure 19

2. In the Settings menu, scroll down to Protected menus and press the → button.

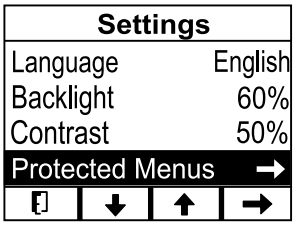

Figure 20

3. To enter the PIN code, use the 2 center buttons to input each digit, and press the → button to move on to the next digit. Repeat this step until the last digit is entered and press the → button again.

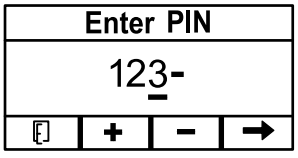

Figure 21

4. Press the ✓ button to confirm the PIN code.

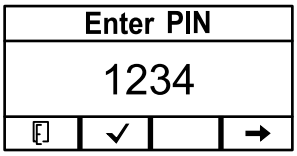

g377941

Figure 22

Note: If the message display accepts the PIN code and the protected menu is unlocked, the word "PIN" displays in the upper right corner of the screen.

Before Operation

Before Operation Safety

- Do not operate the machine unless all safety switches and other devices are in place and working properly.
- Before leaving the operator's position for any reason, do the following:
  - Park the machine on a level surface.
  - Disengage the drives and the power take-off.
  - Engage the parking brake.
  - Shut off the machine and remove the key.
  - Wait for all moving parts to stop.
- Before mowing, always inspect the machine to ensure that the blades, blade bolts, and cutting assemblies are in good working condition.
- This product generates an electromagnetic field. If you wear an implantable electronic medical device, consult your health care professional before using this product.
- Use only accessories and attachments approved by Exmark.
- Do not carry passengers on the machine and keep bystanders and pets away from the machine during operation.
- This machine produces a sound power level that exceeds 85 dBA at the operator's ear, which can cause hearing loss through extended periods of exposure. Wear hearing protection when operating this machine.
- Before operating the machine, ensure that the operator presence controls and either the discharge deflector or the entire grass collection system are in place and working properly. Otherwise, do not operate the machine.
- When you shut off the machine, the blades should stop. If not, stop using the machine immediately and contact an Authorized Service Dealer.
- Shut off the machine and attachment(s) if anyone enters the area.

Performing Daily Maintenance

Before starting the machine each day, perform the Each Use/Daily procedures listed in the **Maintenance** section.

Using the Safety-Interlock System

⚠ DANGER

If safety-interlock switches are disconnected or damaged, the machine could operate unexpectedly, which will result in serious injury or death.

- **Do not tamper with the interlock switches.**
- **Check the operation of the interlock switches daily, and replace any damaged switches before operating the machine.**

Understanding the Safety-Interlock System

The safety-interlock system prevents the PTO from engaging unless you do the following:

- Sit on the seat.
- Press the On position on the PTO switch.

Symbols display on the message display to notify the user when each interlock component is in the correct position.

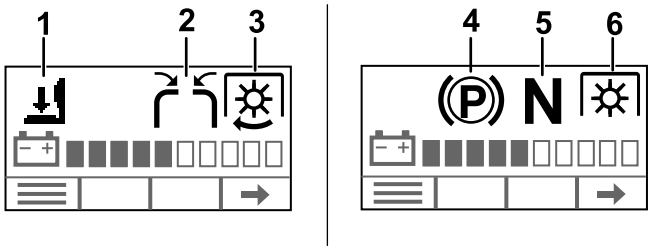

g396723

Figure 23

1. The operator is off the seat.
2. One or both control levers are down in the center, unlocked position.
3. The PTO switch is in the On position and the mower blades are engaged.
4. The parking brake is engaged.
5. Motion-control levers are in the Neutral position.
6. The PTO switch is in the On position but the mower blades are not engaged.

Testing the Safety-Interlock System

Service Interval: Before each use or daily

Test the safety-interlock system before you use the machine each time.

Note: If the safety system does not operate as described, have an Authorized Service Dealer repair the safety-interlock system immediately.

1. Sit on the seat and start the machine.
2. Verify that each safety-interlock icon in Figure 23 displays on the message display when the interlock is active and disappears when it is inactive.
3. Press the On position on the PTO switch.

   Note: The mower blades should engage.

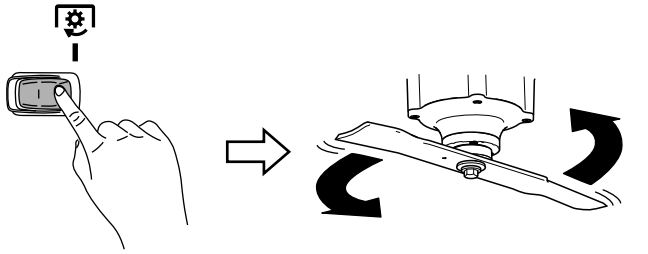

g463206

Figure 24

4. Rise slightly from the seat.

   Note: The blades should stop.

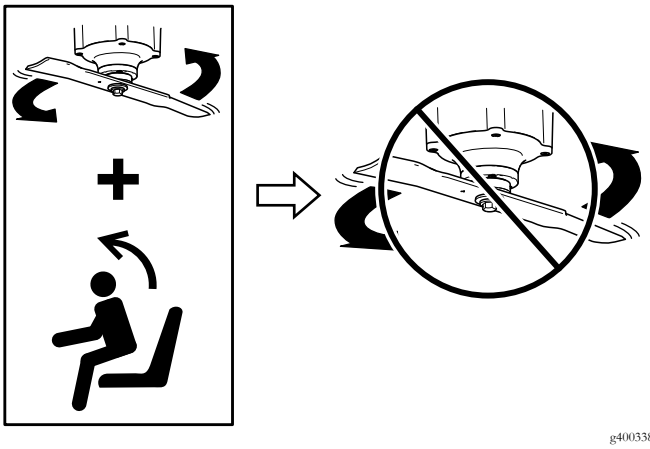

g400338

Figure 25

5. Press the Off position on the PTO switch and shut off the machine.

Operating Instructions

During Operation Safety

General Safety

- Before you start the machine, ensure that all drives are in neutral.
- Keep away from holes, ruts, bumps, rocks, and other hidden hazards. Use care when approaching blind corners, shrubs, trees, tall grass or other objects that may hide obstacles or obscure vision. Uneven terrain could overturn the machine or cause you to lose your balance or footing.
- Shut off the machine and disengage the drive to the cutting unit after striking a foreign object or if an abnormal vibration occurs. Inspect the cutting unit for damage and make repairs before starting and operating the machine.
- Be alert, slow down, and use caution when making turns and crossing roads and sidewalks with the machine. Always yield the right-of-way.
- Do not use the machine as a towing vehicle.
- Never raise the mower deck with the blades running.
- Be aware of the mower discharge path and direct discharge away from others. Avoid discharging material against a wall or obstruction as the material may ricochet back toward the operator. Stop the blades, slow down, and use caution when crossing surfaces other than grass and when transporting the mower.
- Do not leave a running machine unattended.
- Be alert and shut off the machine if children enter the area.

Slope Safety

- Slopes are a major factor related to loss of control and rollover accidents, which can result in severe injury or death. The operator is responsible for safe slope operation. Operating the machine on any slope requires extra caution. Before using the machine on a slope, the operator must:
  - Review and understand the slope instructions in the manual and on the machine.
  - Use an angle indicator to determine the approximate slope angle of the area.
  - Never operate on slopes greater than 15 degrees.
  - Evaluate the site conditions of the day to determine if the slope is safe for machine operation. Use common sense and good judgment when performing this evaluation. Changes in the terrain, such as moisture, can quickly affect the operation of the machine on a slope.
- Identify hazards at the base of the slope. Do Not operate the machine near drop offs, ditches, embankments, water or other hazards. The machine could suddenly roll over if a wheel goes over the edge or the edge collapses. Keep a safe distance (twice the width of the machine) between the machine and any hazard. Use a walk behind machine or a hand trimmer to mow the grass in these areas.

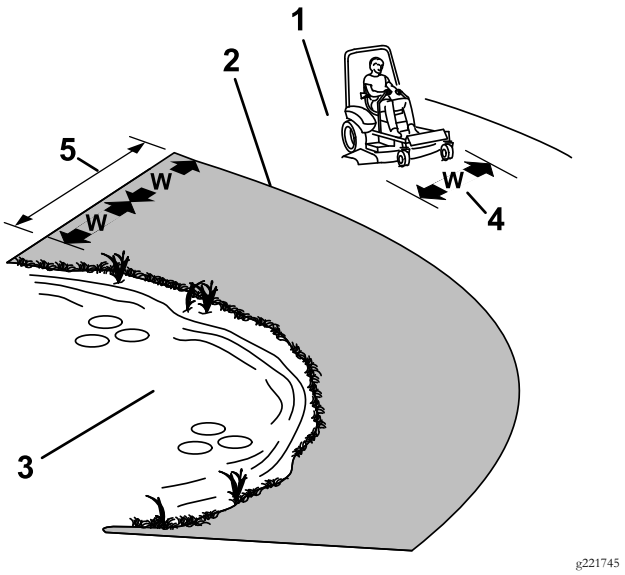

Figure 26

1. Safe Zone-Use the mower here on slopes less than 15 degrees
2. Danger Zone-Use a walk-behind mower and/or hand trimmer on slopes greater than 15 degrees
3. Water
4. W=width of the machine
5. Keep a safe distance (twice the width of the machine) between the machine and any hazard.

- Avoid starting, stopping or turning the machine on slopes. Avoid making sudden changes in speed or direction; turn slowly and gradually.
- Do Not operate a machine under any conditions where traction, steering or stability is in question. Be aware that operating the machine on wet grass,

across slopes or downhill may cause the machine to lose traction. Loss of traction to the drive wheels may result in sliding and a loss of braking and steering. The machine can slide even if the drive wheels are stopped.

- Remove or mark obstacles such as ditches, holes, ruts, bumps, rocks or other hidden hazards. Tall grass can hide obstacles. Uneven terrain could overturn the machine.
- Use extra care while operating with accessories or attachments, such as grass collection systems. These can change the stability of the machine and cause a loss of control. Follow directions for counter weights.
- If possible, keep the deck lowered to the ground while operating on slopes. Raising the deck while operating on slopes can cause the machine to become unstable.

Rollover Protection System (ROPS) Safety

⚠ WARNING

There is no rollover protection when the ROPS (roll bar) is down. Wheels dropping over edges, ditches, steep banks, or water can cause rollovers, which may result in serious injury, death or drowning.

- **Do Not remove the ROPS.**
- **Keep the roll bar in the fully raised and locked position and always wear your seat belt whenever the roll bar is up.**
- **Lower the roll bar only when absolutely necessary.**
- **Do Not wear seat belt when the roll bar is down.**
- **Drive slowly and carefully.**
- **Raise the roll bar as soon as clearance permits.**
- Be certain that the seat belt can be released quickly in the event of an emergency.
- Check carefully for overhead clearances (i.e. branches, doorways, and electrical wires) before driving under any objects and Do Not contact them.
- In the event of a rollover, take the machine to an Authorized Service Dealer to have the ROPS inspected. Replace damaged ROPS components. Do not repair or alter them.
- Only Exmark approved accessories or attachments may be added to the ROPS.

Raise the Rollover Protection System (ROPS)

Important: The roll bar is an integral and effective safety device. Keep the roll bar in the raised and locked position when operating the mower. Lower the roll bar temporarily only when absolutely necessary.

1. The knob must be completely latched with the tabs interlocking as shown in Figure 27 to lock the roll bar in the raised, operate position.
2. Apply forward pressure to the upper hoop of the roll bar.
3. Pull the knob and rotate 90° to hold in the unlatched position to lower the roll bar.
4. To return to the operate position, raise the roll bar, and then rotate knobs 90° so that the tabs interlock partially. Apply forward pressure to the roll bar upper hoop and observe that the knobs return to the completely latched position.

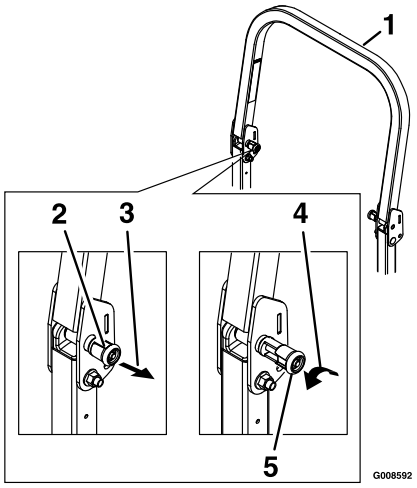

g008592

Figure 27

1. Roll bar upper hoop
2. Knob in “latched” position
3. Pull knob to unlatch
4. Rotate 90° to hold unlatched
5. Knob in “unlatched” position

5. Make sure the knobs are fully engaged with the roll bar in the raised position. The upper hoop of the roll bar may need to be pushed forward or

pulled rearward to get both knobs fully engaged (see Figure 28).

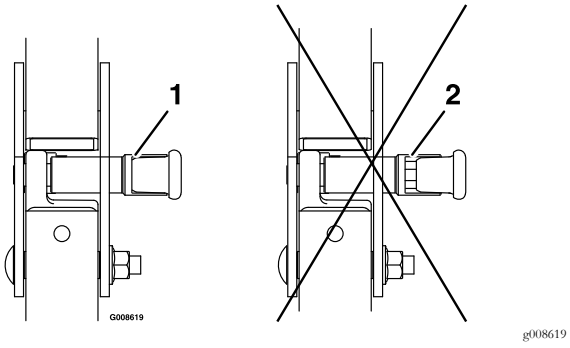

Figure 28

1. Engaged
2. Partially engaged — Do Not operate with ROPS in this condition.

Important: Always use the seat belt with the roll bar in the operate (raised) position. Ensure that the rear part of the seat is secured with the seat latch.

Starting the Machine

1. Move the motion control levers outward into the T-slot to engage the parking brake.
2. Push down on the PTO switch to the "disengage" position.

   Note: It is not necessary for the operator to be in the seat to start the machine.
3. Turn ignition switch to the "ON" position.

Engaging the PTO

⚠ DANGER

The rotating blades under the mower deck are dangerous. Blade contact can cause serious injury or death.

Do Not put hands or feet under the mower or mower deck when the blades are engaged.

⚠ DANGER

An uncovered discharge opening will allow objects to be thrown in an operator's or bystander's direction. Also, contact with the blade could occur. Thrown objects or blade contact can cause serious injury or death.

Never operate the mower with the discharge deflector raised, removed, or altered unless there is a grass collection system or mulch kit in place and working properly.

The PTO switch engages the cutting blades. Be sure that all persons are clear of the mower deck and discharge area before engaging PTO.

Push down on the front of the PTO switch (right side) to engage the blades.

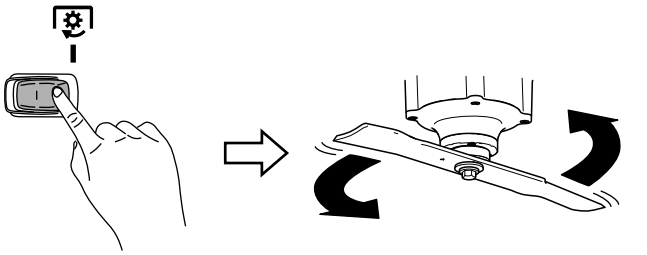

Figure 29

Disengaging the PTO

Push down on the back of the PTO switch (left side) to disengage the blades.

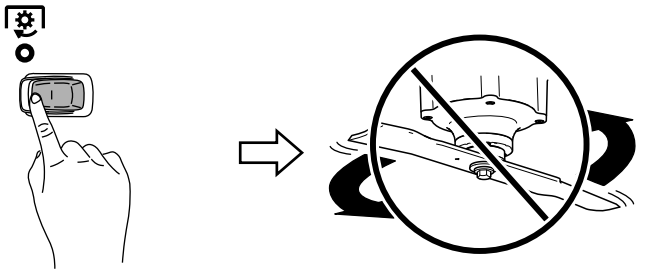

Figure 30

Stopping the Machine

⚠ CAUTION

Children or bystanders may be injured if they move or attempt to operate the machine while it is unattended.

Always remove the key and engage the parking brake when leaving the machine unattended.

1. Bring the machine to a full stop.
2. Disengage the PTO.
3. Move the motion control levers outward into the T-slot to engage the parking brake.
4. Turn the key switch to the "OFF" position.
5. Wait for all moving parts to stop before leaving the operating position.

Driving the Machine

⚠ CAUTION

Positioning one lever too far in front of the other causes the machine to spin very rapidly. As a result, you may lose control of the machine, causing personal injury to you and damage to the machine.

Slow down the machine before making sharp turns.

When the motion control levers are positioned fully outward (apart) in the T-slot, the drive system is in the park position (Figure 31).

Note: The "N" LCD indicator appears when both levers are in the park brake position (levers out).

When the motion control levers are moved directly inward (together), the drive system is in the neutral operate position.

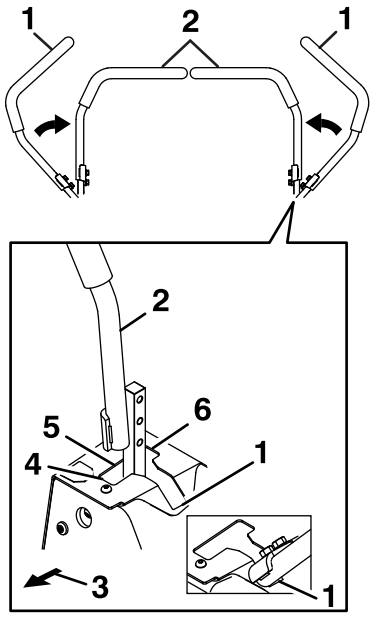

g440365

Figure 31

1. Park brake (handles out)
2. Neutral operate position (handles in)
3. Front of machine
4. Forward
5. Neutral
6. Reverse

Driving Forward

1. Move the motion control levers inward to the center, to the neutral position, to release the parking brake.
2. To move forward in a straight line, move both levers forward with equal pressure.

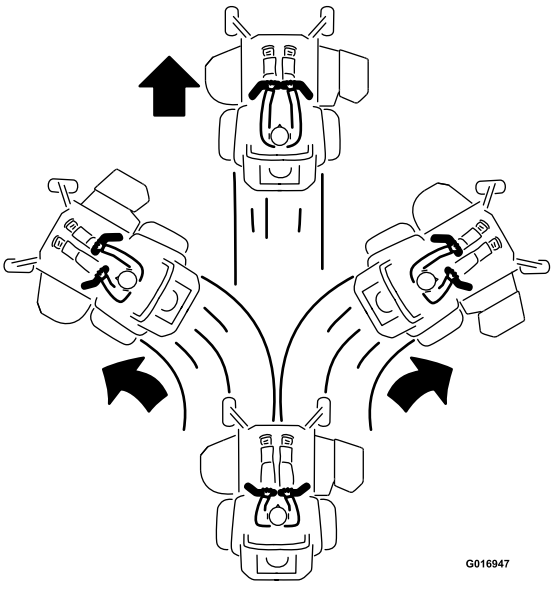

g016947

Figure 32

To turn left or right, pull the motion control lever back toward neutral in the desired turn direction.

The machine will move faster the farther the motion control levers are moved from the neutral position.

3. To stop, position both motion control levers in the neutral operate position.

Driving in Reverse

1. Move the motion control levers inward to the neutral operate position.
2. To move rearward in a straight line, move both levers rearward with equal pressure.

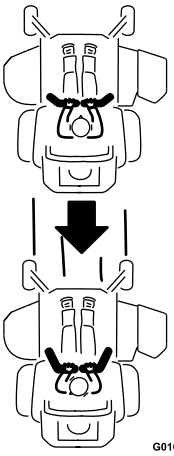

g016948

Figure 33

To turn right, release pressure on the RH motion control lever and the rear of the machine will move towards the rear and to the right.

To turn left, release pressure on the LH motion control lever and the rear of the machine will move towards the rear and to the left.

3. To stop, position both motion control levers in the neutral operate position.

Side Discharging or Mulching the Grass

This machine has a hinged grass deflector that disperses clippings to the side and down toward the turf.

⚠ DANGER

Without the grass deflector, discharge cover, or complete grass catcher assembly mounted in place, you and bystanders are exposed to blade contact and thrown debris. Contact with rotating mower blade(s) and thrown debris will cause injury or death.

- **Do not remove the grass deflector from the machine, because the grass deflector routes material down toward the turf. If the grass deflector is ever damaged, replace it immediately.**
- **Never try to clear the discharge area or mower blades unless the power takeoff (PTO) is off. Rotate the key to the OFF position and remove the key.**

Adjusting the Cutting Height

The cutting height of the mower deck is adjusted from 1 to 5 inches (2.5 cm to 13 cm) in 1/4 inch (6.4 mm) increments.

1. Stop the machine.
2. Disengage the PTO.
3. Raise and lock the deck to the transport position (Figure 34).

   The deck is raised by pushing the foot operated deck lift pedal forward. The pedal is located at the front right corner of the floor pan. The transport latching mechanism will automatically engage when the deck is raised to the transport position. The transport lock lever will be in the rearward position.

Note: When changing the cutting height positions, always come to a complete stop and disengage the PTO.

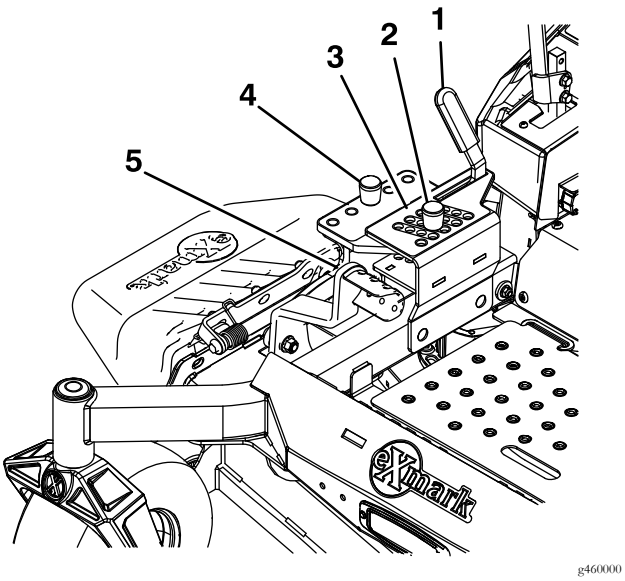

Figure 34

1. Transport lock lever
2. Height adjustment pin
3. Height of cut decal
4. Rake adjustment pin
5. Deck foot pedal

4. Insert the height adjustment pin into the hole corresponding to the desired cutting height.

   See the decal on the top of the deck lift plate for cut heights.

5. Push the foot lever forward to remove the load from the transport latching mechanism, push the transport lock lever forward, and allow the pedal to move rearward to lower the cutting deck to the cut height that has been set.

Adjusting the Anti-Scalp Rollers

It is recommended to change the anti-scalp roller position when the height of cut has changed.

1. Stop the machine.
2. Disengage the PTO.
3. Move the motion control levers outward to engage the park brake.
4. Shut off the machine, remove the key and wait for all moving parts to stop.
5. After adjusting the height of cut, adjust the anti-scalp rollers by removing the mounting hardware.
6. Place the rollers in one of the positions shown (Figure 35). Rollers will maintain 3/4 inch (19 mm) clearance to the ground to minimize gouging and roller wear or damage.

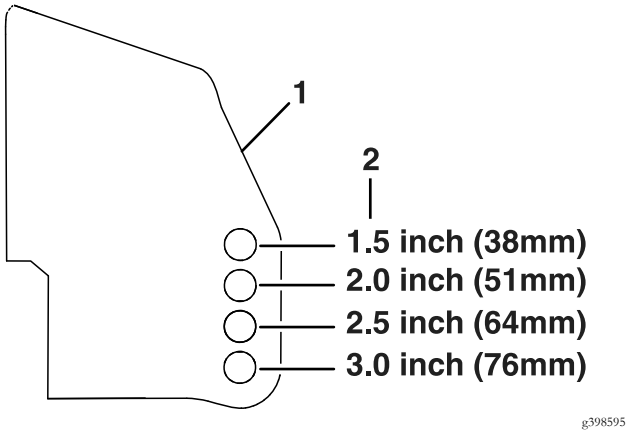

Figure 35

For cutting heights above 3.0 inches (76 mm) use the bottom hole. The rollers will still be effective against scalping.

1. Anti-scalp roller mounting bracket
2. Cutting height

For Maximum Deck Flotation, place the rollers one hole position lower. Rollers should maintain 1/4 inch (6.4 mm) clearance to the ground. **Do Not** adjust the rollers to support the deck.

7. Reinstall the mounting hardware as shown in Figure 36, with the roller bolt head on the outside of the bracket for the left and right anti-scalp rollers; see Figure 37 for center anti-scalp roller mounting.

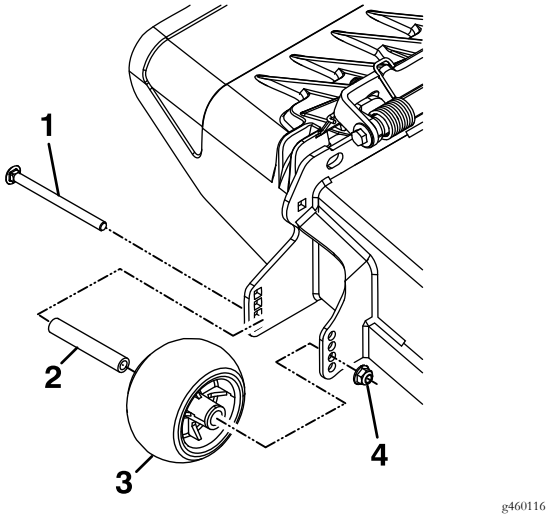

Figure 36

1. 3/8-16 X 5 inch roller bolt
2. Long bushing
3. Anti-scalp roller
4. 3/8 inch nyloc nut

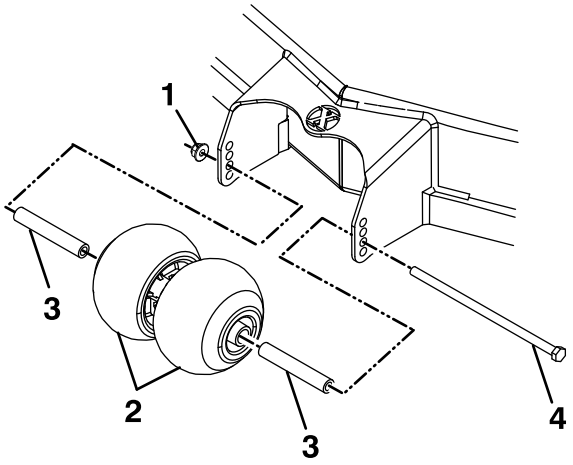

Figure 37

1. 3/8 inch nyloc nut
2. Anti-scalp roller
3. Spacer
4. 3/8-16 X 8 1/2 inch roller bolt

8. Torque the 3/8 inch nyloc nut to 27-33 ft-lb (37-45 N-m).

Adjusting the Rake of the Mower Deck

The rake of the mower deck can be adjusted to provide both negative and positive rake.

Placing the rake pin into the:

- "Home" position provides the standard factory deck rake.
- farthest front hole is the maximum positive rake
- farthest rear hole is the maximum negative rake.

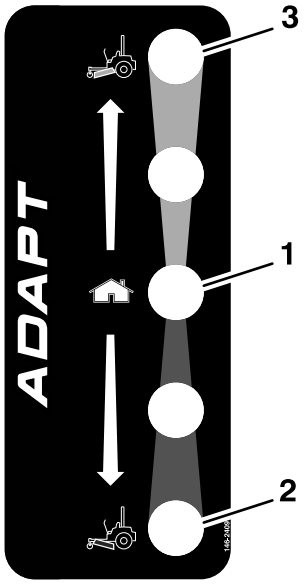

Figure 38

1. Home position
2. Maximum negative rake
3. Maximum positive rake

1. Stop the machine.
2. Disengage the PTO.
3. Move the motion control levers outward to engage the park brake.
4. Place the deck in the transport position.
5. Applying pressure to the foot pedal, remove the rake pin and allow the holes to line up to the desired rake position, and reinstall the pin.

Monitoring the Battery-System Charge Level

Refer to the main information screen in the message display to determine the battery-system charge level.

- **Low battery:** When the battery level reaches a low percentage, a low-battery advisory appears on the message display.

  Finish mowing, then transport the machine to a designated battery-charging area and charge the batteries.

- **Limp mode:** If the battery level drops below the set limp-mode battery percentage, an advisory appears on the message display, and the mower blades will disengage and cannot be engaged.

Transport your machine to a designated battery-charging area and charge the batteries.

- **Ultra-limp mode:** If the battery level becomes too low during limp mode, an advisory appears on the message display and traction speed automatically decreases.

  Transport your machine to a designated battery-charging area and charge the batteries.

Refer to
Charging the Lithium-Ion Batteries (page 41).

Adjusting the Battery Percentage for Limp Mode

Note: The message display shows only 2 items at a time; however, the following figures show the full menus for context.

1. Park the machine on a level surface, disengage the PTO, and move the motion-control levers outward to the Park position.
2. In the Main menu, scroll down to Service and press the → button.

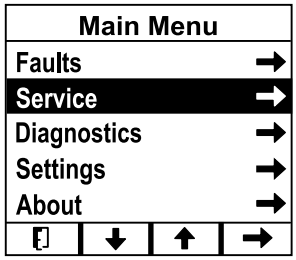

g376300

Figure 39

3. In the Service menu, scroll down to Limp Mode and adjust the percentage using the – and + buttons.

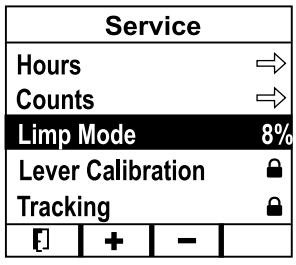

g377943

Figure 40

After Operation

After Operation Safety

- Disengage the PTO whenever you are transporting or not using the machine.
- Use full-width ramps for loading the machine into a trailer or truck.
- Tie the machine down securely using straps, chains, cable, or ropes. Both front and rear straps should be directed down and outward from the machine.
- Replace all worn, damaged, or missing parts and decals. Keep all fasteners tight to ensure that the machine is working properly.

Battery and Charger Safety

General

- **WARNING:** Risk of fire and electric shock—The batteries have no user-serviceable parts.
- Confirm the voltage that is available in your country before using the charger.
- Do not get the charger wet; keep it protected from rain and snow.
- A risk of fire, electric shock, or injury may result from using an accessory not recommended or sold by Exmark.
- To reduce risk of a battery explosion, follow these instructions and the instructions for any equipment that you intend to use near the charger.
- Batteries could emit explosive gasses if they are significantly overcharged.
- Refer to an Authorized Service Dealer to service or replace a battery.

Training

- Never allow children or untrained people to operate or service the charger. Local regulations may restrict the age of the operator. The owner is responsible for training all operators and mechanics.
- Read, understand, and follow all instructions on the charger and in the manual before operating the charger. Be familiar with the proper use of the charger.

Preparation

- Keep bystanders and children away while charging.
- Wear appropriate clothing while charging, including eye protection; long pants; and substantial, slip-resistant footwear.
- Shut off the machine and wait until the machine has completely powered down before charging. Failure to do this may cause arcing.
- Ensure that the area is well ventilated while charging.

Operation

- Do not charge a frozen battery.
- Do not abuse the cord. Do not carry the charger by the cord or yank on the power supply cord to disconnect the charger from the receptacle. Keep the cord from heat, oil, and sharp edges.
- Connect the charger directly to a grounding receptacle. Do not use the charger on an ungrounded outlet, even with a grounding adapter.
- Do not alter the provided power cord or plug.
- Remove metal items such as rings, bracelets, necklaces, and watches when working with a lithium-ion battery. A lithium-ion battery can produce enough current to cause a severe burn.
- Never operate the charger without good visibility or light.
- Use an extension cord capable of handling 15 A or more. If you are charging outdoors, use an extension cord rated for outdoor use.
- If the power supply cord is damaged while it is plugged in, disconnect the cord from the wall receptacle and contact an Authorized Service Dealer for a replacement.
- Unplug the charger from the electrical outlet when not in use, before moving it to another location, or prior to servicing it.

Maintenance and Storage

- Store the charger indoors in a dry, secure place that is out of the reach of unauthorized users.
- Do not disassemble the charger. Take the charger to an Authorized Service Dealer when service or repair is required.
- Unplug the power cord from the outlet before starting any maintenance or cleaning to reduce risk of electric shock.
- Maintain or replace safety and instruction labels as needed.
- Do not operate the charger with a damaged cord or plug. Contact an Authorized Service Dealer to obtain a replacement cord.
- If the charger has received an impact, been dropped, or otherwise damaged, do not use it; take it to an Authorized Service Dealer.

Moving a Non-Functioning Machine

Important: Do not tow the machine without first disengaging the transmission, otherwise you could damage motor components.

⚠ CAUTION

The machine does not have brakes when the transmission is disengaged. It will roll uncontrolled, possibly causing injury.

Use caution when towing the machine and engage the transmission after moving it.

1. Disengage the PTO and move the motion-control levers outward to the Park position.
2. Shut off the machine, remove the key, and wait for all moving parts to stop before leaving the operating position.
3. Remove the cap from the motor.

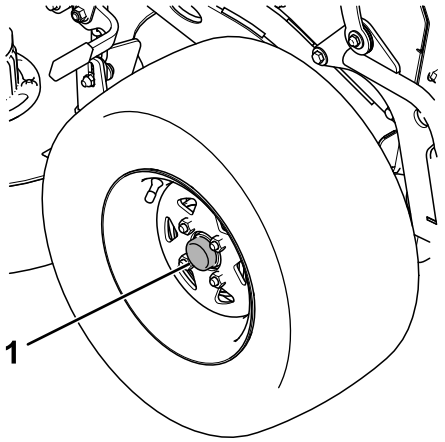

g377043

Figure 41

1. Motor cap

4. Disengage the transmission.
   A. Insert a ratchet with a 3/8 inch drive into the square hole in the motor hub.

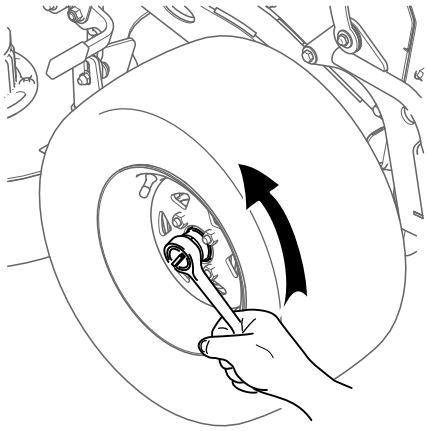

g377045

Figure 42

   B. Rotate it counterclockwise until it stops (approximately 4 full rotations) to disengage the transmission.
   C. Torque to 41 to 68 N·m (30 to 50 ft-lb).

Note: The wheel will spin freely.

5. Repeat for the other motor.
6. Move the machine to the desired location.

Important: Do not move the machine faster than 8 km/h (5 mph).

7. Immediately after moving the machine, engage the transmission for operation.
   A. Insert a ratchet with a 3/8 inch drive into the square hole in the motor hub.

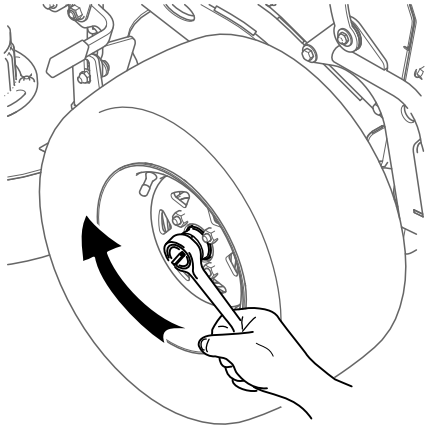

g377042

Figure 43

   B. Rotate it clockwise until it stops (approximately 4 full rotations).
   C. Torque to 41 to 68 N·m (30 to 50 ft-lb).

Transporting

Transporting the Machine

Use a heavy-duty trailer or truck to transport the machine. Ensure that the trailer or truck has all necessary lighting and marking as required by law. Thoroughly read all of the safety instructions. Knowing this information could help you, your family, pets, or bystanders avoid injury.

To transport the machine:

- Lock the brake and block the wheels.
- Securely fasten the machine to the trailer or truck with straps, chains, cable, or ropes. Only use the four designated tie-down locations on the mower–two on the left side and two on the right (see Figure 44). Use these locations even when transporting the mower with an attached accessory. Using non-designated locations may cause damage to the mower and/or attachment.

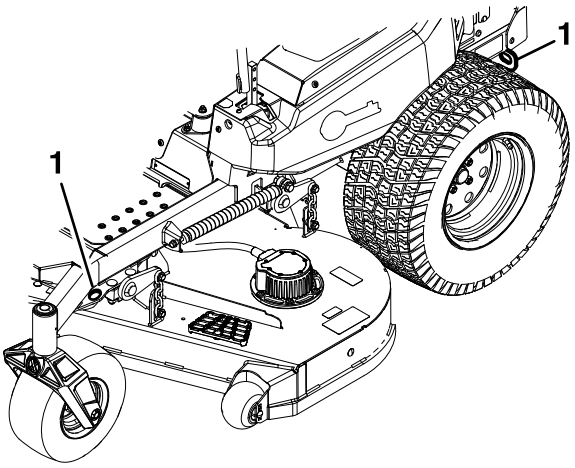

g440416

Figure 44

1. Tie-down location

- Secure a trailer to the towing vehicle with safety chains.

⚠ WARNING

Driving on the street or roadway without turn signals, lights, reflective markings, or a slow moving vehicle emblem is dangerous and can lead to accidents causing personal injury.

Do not drive machine on a public street or roadway.

Loading the Machine

Use extreme caution when loading or unloading machines onto a trailer or a truck. Use a full-width ramp that is wider than the machine for this procedure. Back up ramps and drive forward down ramps (Figure 45).

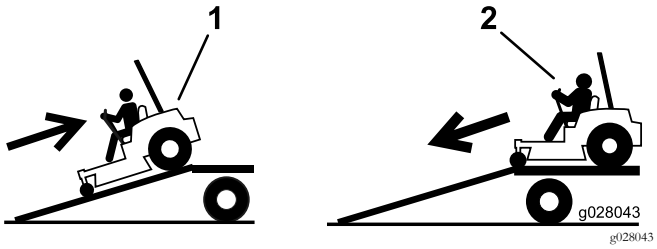

g028043

Figure 45

1. Back up ramps
2. Drive forward down ramps

Important: Do not use narrow individual ramps for each side of the machine.

Ensure the ramp is long enough so that the angle with the ground does not exceed 15 degrees (Figure 46). On flat ground, this requires a ramp to be at least four times (4X) as long as the height of the trailer or truck bed to the ground. A steeper angle may cause mower components to get caught as the unit moves from the ramp to the trailer or truck. Steeper angles may also cause the machine to tip or lose control. If loading on or near a slope, position the trailer or truck so that it is on the down side of the slope and the ramp extends up the slope. This will minimize the ramp angle.

⚠ WARNING

Loading a machine onto a trailer or truck increases the possibility of tip-over and could cause serious injury or death.

- **Use extreme caution when operating a machine on a ramp.**
- **Ensure that the ROPS is in the up position and use the seat belt when loading or unloading the machine. Ensure that the ROPS will clear the top of an enclosed trailer.**
- **Use only a full-width ramp; do not use individual ramps for each side of the machine.**
- **Do not exceed a 15-degree angle between the ramp and the ground or between the ramp and the trailer or truck.**
- **Ensure the length of ramp is at least four times (4X) as long as the height of the trailer or truck bed to the ground. This will ensure that ramp angle does not exceed 15 degrees on flat ground.**
- **Back up ramps and drive forward down ramps.**
- **Avoid sudden acceleration or deceleration while driving the machine on a ramp as this could cause a loss of control or a tip-over situation.**

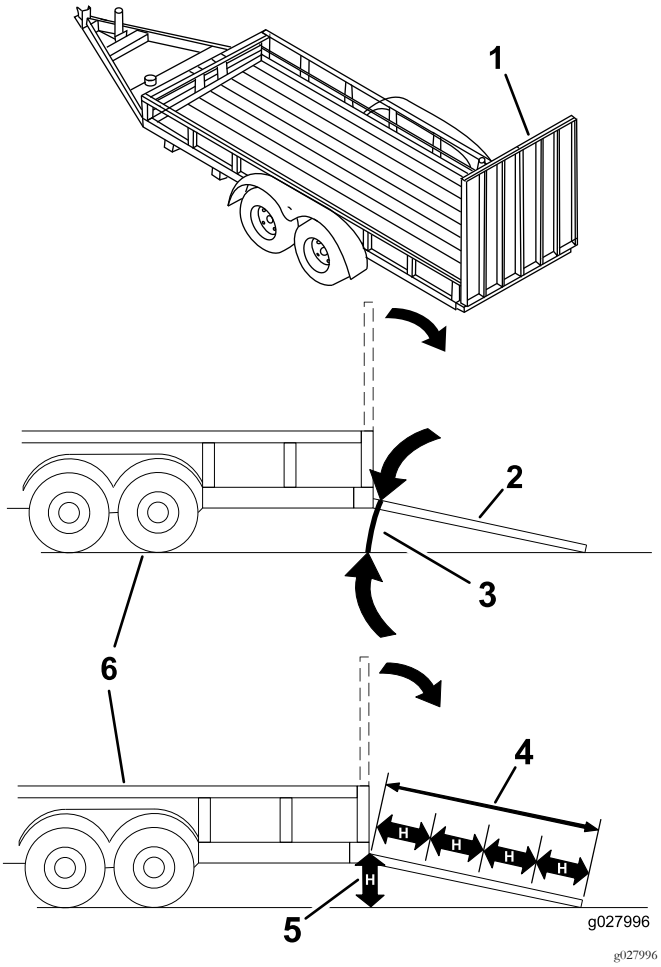

Figure 46

1. Full-width ramp in stowed position
2. Side view of full-width ramp in loading position
3. Not greater than 15 degrees
4. Ramp is at least four times (4X) as long as the height of the trailer or truck bed to the ground
5. H= height of the trailer or truck bed to the ground
6. Trailer

Towing the Machine

- Do not attach towed equipment except at the hitch point.
- Follow the attachment manufacturer's recommendation for weight limits for towed equipment and towing on slopes. Towed weight must not exceed the weight of the machine, operator, and ballast; otherwise hydrostatic transmission failure may occur. Use counterweights or wheel weights as described in the attachment manufacturer's manual.
- Never allow children or others in or on towed equipment.
- On slopes, the weight of the towed equipment may cause loss of traction, increased risk of rollover, and loss of control. Reduce the towed weight and slow down.
- Stopping distance increases with the weight of the towed load. Travel slowly and allow extra distance to stop.
- Make wide turns to keep the attachment clear of the machine.

Transporting the Lithium-Ion Batteries

The US Department of Transportation and international transportation authorities require that lithium-ion batteries be transported using special packaging and only be transported by carriers certified to haul them. In the US, you are allowed to transport a battery when it is installed on the machine as battery powered equipment, with some regulatory requirements. Contact the US Department of Transportation or the appropriate government body in your country for detailed regulations on transportation of your batteries or the machine with the batteries equipped.

For detailed information on shipping a battery, contact your Authorized Service Dealer.

Using the Lithium-Ion Battery Charger

Refer to Figure 47 for an overview of the battery-charger cords.

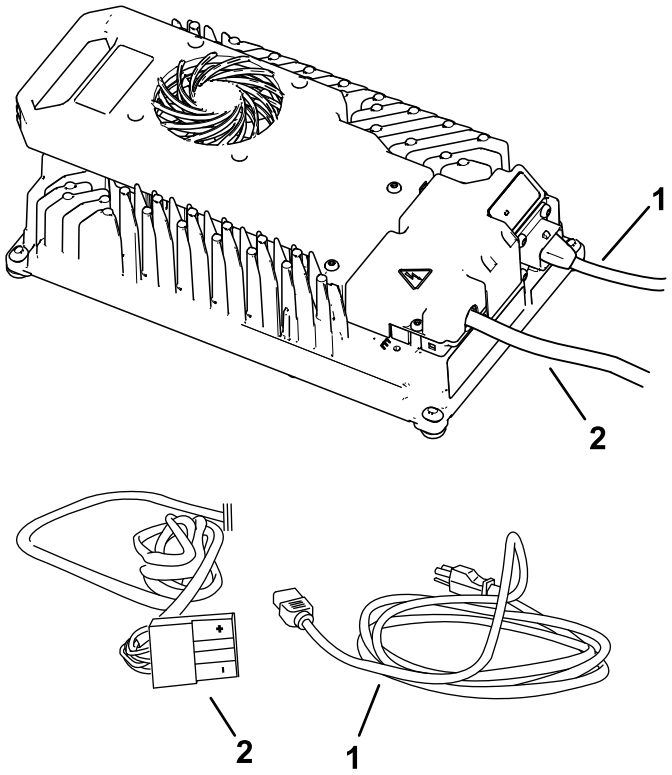

Figure 47

1. Power-supply cord
2. Output connector and cord

Connecting to a Power Source

⚠ DANGER

Contact with water while charging the machine could cause electric shock, causing injury or death.

- **Do not handle the plug or the charger with wet hands or while standing in water.**
- **Do not charge the batteries in the rain or in wet conditions.**

To reduce the risk of electric shock, this charger has a 3-prong grounded plug (type B). If the plug does not fit into the wall receptacle, other grounded plug types are available; contact an Authorized Service Dealer.

Do not change the charger or the power-supply-cord plug in any way.

Important: Check the power supply cord periodically for holes or cracks in the insulation. Do not use a damaged cord. Do not run the cord through standing water or wet grass.

1. Insert the charger plug on the power-supply cord into the matching input power socket on the charger.

   ⚠ WARNING

   A damaged charger cord can cause an electrical shock or a fire.

   Thoroughly inspect the power supply cord before using the charger. If the cord is damaged, do not operate the charger until you obtain a replacement.

2. Insert the wall plug end of the power supply cord into a grounded electrical outlet.

Charging the Lithium-Ion Batteries

⚠ CAUTION

Attempting to charge the batteries with a charger not provided by Exmark can result in excessive heat and other related product malfunctions, which can lead to property damage and/or injury.

Use the Exmark-provided chargers to charge the batteries.

Recommended temperature range for charging: 0° to 45°C (32° to 113°F)

Important: Charge the batteries only in temperatures within the recommended range.

Note: The charger will not function in temperatures exceeding the minimum or maximum temperatures.

1. Park the machine in the designated location for charging.
2. Shut off the machine and remove the key.

   Note: Do not turn the battery-disconnect switch to the Off position, otherwise the batteries will not charge.
3. Ensure that the connectors are free of dust and debris.
4. Slide the charger-output connector into the charger connector on the machine.

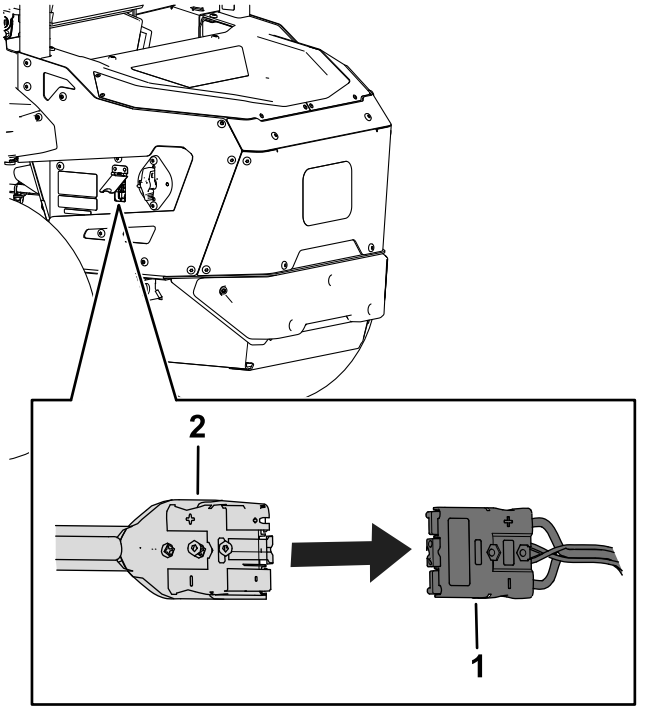

Figure 48

1. Machine connector
2. Charger connector

5. Connect the charger power cord to a power source.
6. Ensure that the message display screen shows that the batteries are charging.

   Note: The message display shows the battery charge percentage and amperage.

   Batteries with a lower voltage charge first; once they reach the voltage of the other batteries, all batteries charge simultaneously

   When charging is complete, the machine message display will show 10 solid bars.

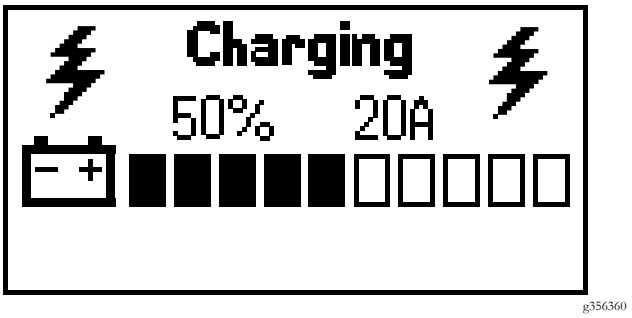

Figure 49

7. When the machine reaches a sufficient level, disconnect the charger connector from the machine connector.
8. Place the charger connector and cord in a storage position that avoids damage.
9. Start the machine.
10. Verify the charge level using the message display.

Maintenance

Note: Determine the left and right sides of the machine from the normal operating position.

⚠ WARNING

Modifying the original machine, parts, and/or accessories may alter the warranty, controllability, and safety of the machine. Making unauthorized modifications to the original machine and/or not using genuine Exmark parts could lead to serious injury or death.

- **Do not make unauthorized modifications to the machine, parts, and/or accessories.**
- **Use only genuine Exmark parts.**

Maintenance Safety

- Before adjusting, cleaning, servicing, or leaving the machine, do the following:
  - Park the machine on a level surface.
  - Disengage the drives and the power take-off.
  - Engage the parking brake.
  - Shut off the machine and remove the key.
  - Wait for all moving parts to stop.
  - Allow machine components to cool.
- Carefully release pressure from components with stored energy.
- Check the parking brake operation frequently. Service the brake as needed.
- Never tamper with safety devices. Check their proper operation regularly.
- Do not rely solely on mechanical or hydraulic jacks to support the machine; support the machine with jack stands whenever you raise the machine.
- Use care when checking the blades. Wrap the blades or wear gloves, and use caution when servicing the blades. Only replace or sharpen the blades; never straighten or weld them.
- On multi-bladed machines, take care as rotating one blade can cause other blades to rotate.
- Keep your hands and feet away from hot surfaces.
- Keep all hardware tightened, especially the blade-attachment hardware.

Recommended Maintenance Schedule(s)

Maintenance Service Interval	Maintenance Procedure
After the first 50 hours	• Change the transmission fluid.
Before each use or daily	• Check the safety-interlock system. • Check the mower blades. • Check the rollover protections systems (roll bar) knobs. • Check the seat belt. • Check for loose hardware. • Clean under the mower deck.
Every 50 hours	• Check the tire pressures.
Every 500 hours	• Change the transmission fluid.
Before storage	• Paint chipped surfaces. • Perform all maintenance procedures before storage.
Yearly	• Grease the front caster pivots.

Periodic Maintenance

Raising the Machine

Service Interval: As required

Whenever you raise the rear of the machine, support the machine under the rear bracket.

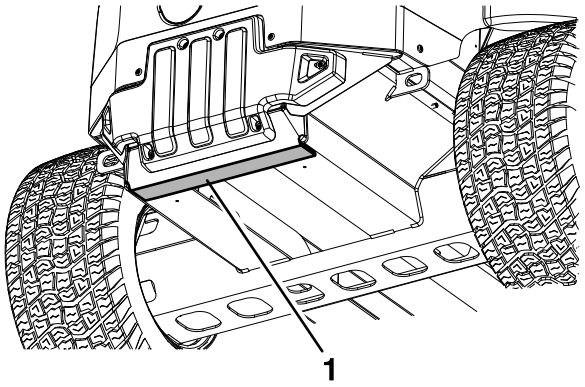

Figure 50

1. Rear bracket

Important: Do not support the machine under the batteries; otherwise, you could damage the batteries.

Removing the Rear Cover

Service Interval: As required

1. Park the machine on a level surface, disengage the blade-control switch, and move the motion-control levers outward to the Park position.
2. Shut off the machine, remove the key, and wait for all moving parts to stop before leaving the operating position.
3. Turn the battery-disconnect switch to the Off position.
4. Remove the six screws securing the rear cover.
5. Remove the cover.

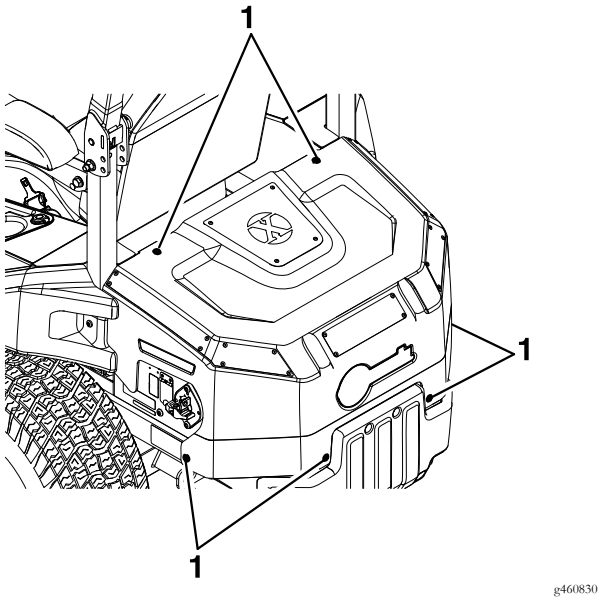

Figure 51

1. Screw

Using the Battery-Disconnect Switch

Service Interval: As required

1. Park the machine on a level surface, disengage the PTO, and move the motion-control levers outward to the Park position.
2. Shut off the machine, remove the key, and wait for all moving parts to stop before leaving the operating position.
3. Unplug the battery charger if it is connected.
4. Position the battery disconnect switch to electrically de-energize or energize the machine.

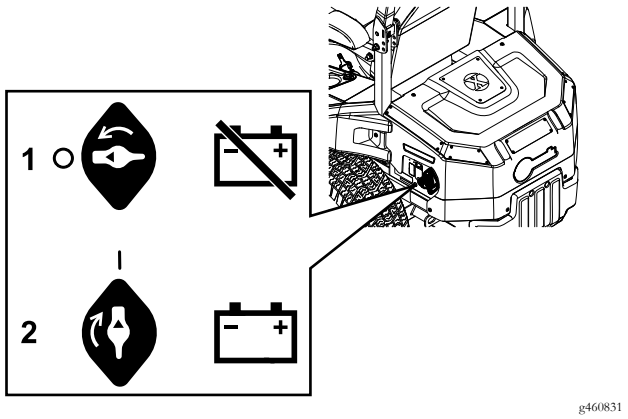

Figure 52

Servicing the Batteries

Note: The machine is equipped with 10 lithium-ion batteries.

A lithium-ion battery must be disposed of or recycled in accordance with local and federal regulations. If a battery requires service, contact your Authorized Service Dealer for assistance.

Do not open the main compartment of a battery. If you are having problems with a battery, contact your Authorized Service Dealer for assistance.

Maintaining the Lithium-Ion Batteries

Service Interval: As required

⚠ WARNING

The batteries contain high voltage, which could burn or shock you.

- **Do not attempt to open the batteries.**
- **Use extreme care when handling a battery with a cracked case.**
- **Use only the charger designed for the batteries.**

The lithium-ion batteries hold a sufficient charge to perform intended work during its life span.

To achieve maximum life and use from your batteries, follow these guidelines:

- Do not open the battery.
- Store/park the machine in a clean, dry garage or storage area, **away from direct sunlight, heat sources, rain, and wet conditions.** Do not store it in a location where the temperature exceeds the range specified in **Battery Storage Requirements** (page 59). **Temperatures outside of this range will damage your batteries.** High temperatures during storage, especially at a high state of charge, reduces the life of the batteries.
- When storing the machine for more than 10 days, ensure that the machine is in a cool and dry location, out of sunlight, rain, and wet conditions.
- If you are mowing in hot conditions or in strong, direct sunlight, the battery may overheat. If this happens, a high-temperature alert will appear on the InfoCenter, the cutting units will disengage, and the machine will slow down.

  Immediately drive the machine to a cool location out of the sun, turn off the machine, and allow the batteries to cool fully before resuming operation.
- Maintain the sharpness of the mower blades. A dull blade increases power consumption and reduces the amount of work that the machine performs on each charge.
- Use lights only when it is necessary.

Maintaining the Battery Charger

Important: All electrical repairs should be performed by an Authorized Exmark Dealer only.

The charger requires little maintenance other than protecting it from damage and weather.

- Clean the battery-charger cords and case with a slightly damp cloth after each use.

  Note: Do not clean the dielectric grease from the terminals.
- Coil the cords when not in use.
- Periodically examine the cords for damage, and replace them when necessary with Exmark-approved parts.

Locating the Fuses

Service Interval: As required

The electrical system is protected by fuses. It requires no maintenance. Refer to the *Service Manual* for information on testing and servicing the motor fuses.

Remove the rear cover to access the fuses.

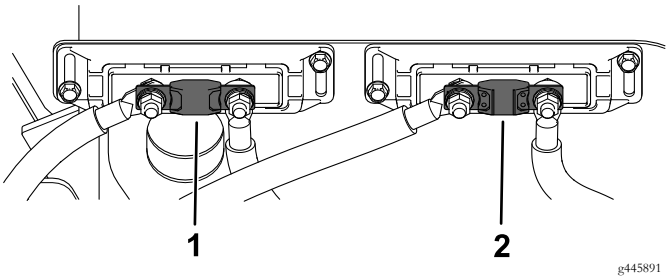

Figure 53

1. Drive motors fuse (200 A)
2. Deck motors fuse (200 A)

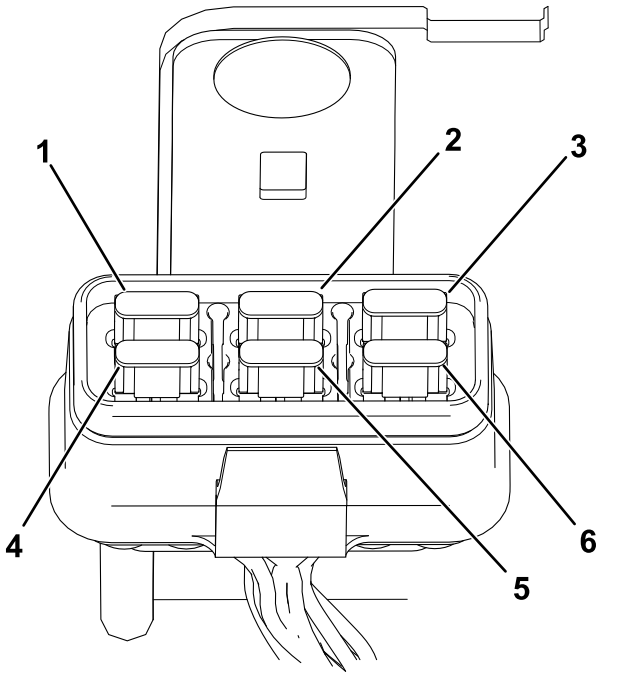

Figure 54

1. TEC power fuse (5 A)
2. 12 V accessory fuse (5 A)
3. Telematics fuse (2 A)
4. TEK logic fuse (2 A)
5. TEC power fuse (5 A)
6. System fuse (7.5 A)

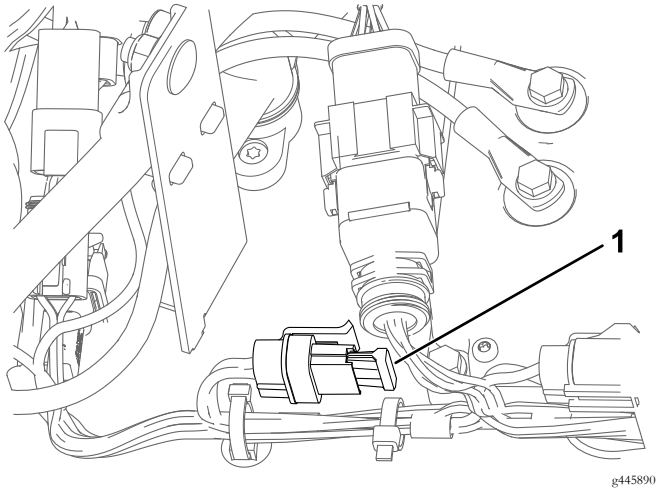

Figure 55

1. DC/DC module fuse (10 A)

Check Mower Blades

Service Interval: Before each use or daily

1. Park the machine on a level surface, disengage the PTO, and move the motion-control levers outward to the Park position.
2. Shut off the machine, remove the key, and wait for all moving parts to stop before leaving the operating position.
3. Unplug the battery charger if it is connected.
4. Turn the battery-disconnect switch to the Off position.
5. Lift deck and secure in raised position as stated in the **Clean Grass Build-Up Under Deck** section.
6. Inspect blades and sharpen or replace as required.

⚠ WARNING

A blade that is bent or damaged could break apart and could critically injure you or bystanders.

- **Always replace a bent or damaged blade with a new blade.**
- **Do not file or create sharp notches in the edges or surfaces of the blade.**

7. Reinstall the blades (if they were removed) in the following order:

A. Install the blade to the shaft.

Note: Ensure that the washer curves downward, as shown, to ensure proper cutting.

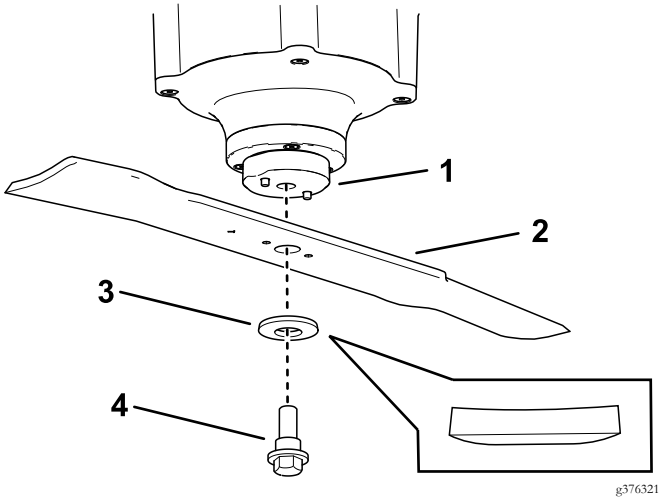

Figure 56

1. Blade retainer
2. Blade
3. Washer
4. Blade bolt

B. Place a wrench on the flat of the spindle shaft and torque the blade bolt to 75 to 81 N·m (55 to 60 ft-lb).

⚠ WARNING

Incorrect installation of the blade or components used to retain the blade can be dangerous. Failure to use all original components and assembled as shown could allow a blade or blade component to be thrown out from under the deck resulting in serious personal injury or death.

Always install the original Exmark blades, blade bushings, and blade bolts as shown.

Check Rollover Protections Systems (Roll Bar) Knobs

Service Interval: Before each use or daily

Check that both the mounting hardware and the knobs are in good working condition. Make sure the knobs are fully engaged with the ROPS in the raised position. The upper hoop of the roll bar may need to be pushed forward or pulled rearward to get both knobs fully engaged.

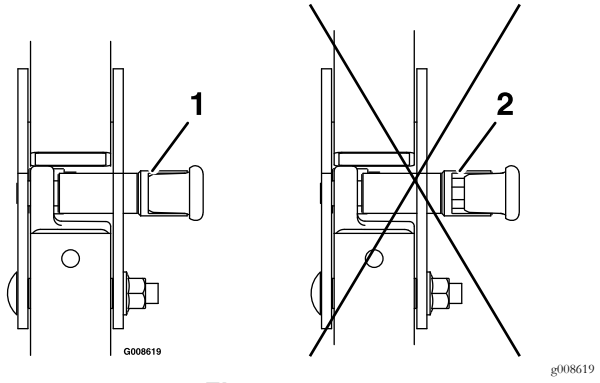

Figure 57

1. Engaged
2. Partially engaged — Do Not operate with ROPS in this condition.

Check Seat Belt

Service Interval: Before each use or daily

Visually inspect seat belt for wear, cuts, and proper operation of retractor and buckle. Replace before operating if damaged.

Check for Loose Hardware

Service Interval: Before each use or daily

1. Stop engine, wait for all moving parts to stop, and remove key. Engage parking brake.
2. Visually inspect machine for any loose hardware or any other possible problem. Tighten hardware or correct the problem before operating.

Check Tire Pressures

Service Interval: Every 50 hours

1. Stop engine, wait for all moving parts to stop, and remove key. Engage parking brake.
2. Check tire pressure in drive tires and pneumatic casters.
3. Inflate drive tires to 13 psi (90 kPa).
4. Semi-pneumatic caster tires Do Not need to be inflated.

Note: Do Not add any type of tire liner or foam fill material to the tires. Excessive loads created by foam filled tires may cause failures to the hydro drive system, frame, and other components. Foam filling tires will void the warranty.

Lubricate Grease Fittings

Note: See chart for service intervals.

1. Stop engine, wait for all moving parts to stop, and remove key. Engage parking brake.
2. Lubricate fittings with one to two pumps of NLGI grade #2 multi-purpose gun grease.

   Refer to the following chart for fitting locations and lubrication schedule.

Lubrication Chart			
Fitting Locations	**Initial Pumps**	**Number of Places**	**Service Interval**
1. Front Caster Pivots	*0	2	*Yearly

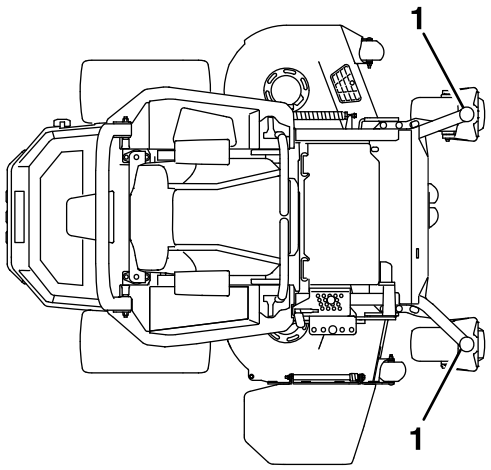

* See step 3 for special lubrication instructions on the front caster pivots.

3. Lubricate caster pivots once a year. Remove hex plug and cap. Thread grease zerk in hole and pump with grease until it oozes out around top bearing. Remove grease zerk and thread plug back in. Place cap back on.

Lubricate Caster Wheel Hubs

Service Interval: As required

1. Stop engine, wait for all moving parts to stop, and remove key. Engage parking brake.

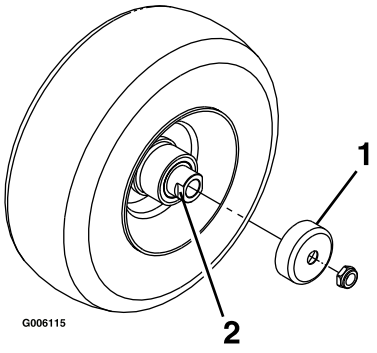

g006115

Figure 58

1. Seal guard
2. Spacer nut with wrench flats

2. Remove caster wheel from caster forks.
3. Remove seal guards from the wheel hub.
4. Remove one of the spacer nuts from the axle assembly in the caster wheel. Note that thread locking adhesive has been applied to lock the spacer nuts to the axle. Remove the axle (with the other spacer nut still assembled to it) from the wheel assembly.
5. Pry out seals, and inspect bearings for wear or damage and replace if necessary.
6. Pack the bearings with a NLGI grade #1 multi-purpose grease.
7. Insert one bearing, one new seal into the wheel.

   Note: Seals (Exmark P/N 103-0063) must be replaced.
8. If the axle assembly has had both spacer nuts removed (or broken loose), apply a thread locking adhesive to one spacer nut and thread onto the axle with the wrench flats facing outward. Do Not thread spacer nut all of the way onto the end of the axle. Leave approximately 1/8 inch (3 mm) from the outer surface of the spacer nut to the end of the axle inside the nut.
9. Insert the assembled nut and axle into the wheel on the side of the wheel with the new seal and bearing.
10. With the open end of the wheel facing up, fill the area inside the wheel around the axle full of NLGI grade #1 multi-purpose grease.
11. Insert the second bearing and new seal into the wheel.
12. Apply a thread locking adhesive to the 2nd spacer nut and thread onto the axle with the wrench flats facing outward.
13. Torque the nut to 75-80 in-lb (8-9 N-m), loosen, then re-torque to 20-25 in-lb (2-3 N-m). Make sure axle does not extend beyond either nut.
14. Reinstall the seal guards over the wheel hub and insert wheel into caster fork. Reinstall caster bolt and tighten nut fully.

Important: To prevent seal and bearing damage, check the bearing adjustment often. Spin the caster tire. The tire should not spin freely (more than 1 or 2 revolutions) or have any side play. If the wheel spins freely, adjust torque on spacer nut until there is a slight amount of drag. Reapply thread locking adhesive.

Changing the Transmission Fluid

Service Interval: After the first 50 hours
Every 500 hours

Fluid type: Exmark Synthetic Electric Motor Drive Oil

Capacity: 150 mL (5 fl oz)

1. Park the machine on a level surface, disengage the PTO, and move the motion-control levers outward to the Park position.
2. Shut off the machine, remove the key, and wait for all moving parts to stop before leaving the operating position.
3. Remove the tire.

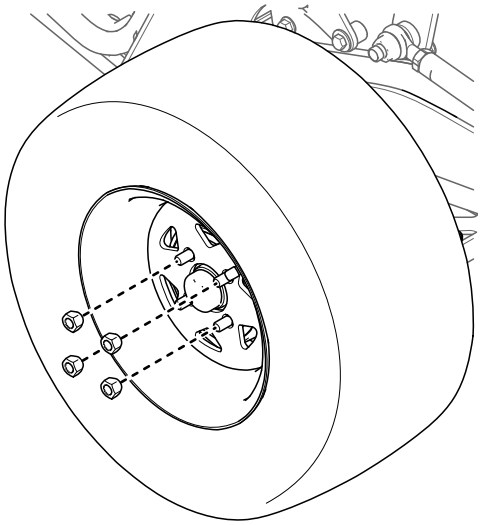

g380066

Figure 59

4. Place a drain pan under the transmission.
5. Remove the top plug and bottom plug. Allow the fluid to drain.

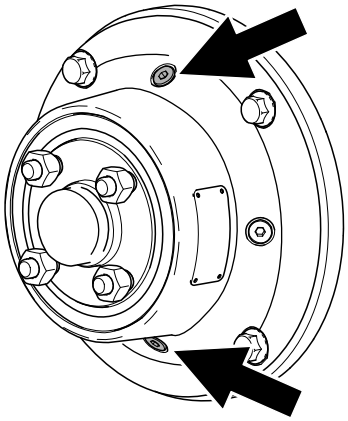

g380054

Figure 60

6. Install the bottom plug and torque it to 7 to 8 N·m (62 to 70 in-lb).
7. Remove a side plug.
8. Add fluid, as specified at the beginning of this procedure, through the top hole until the level reaches the side plug opening.

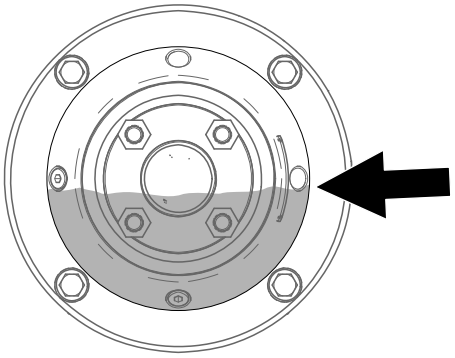

g380053

Figure 61

9. Install the top plug and side plug . Torque them to 7 to 8 N·m (62 to 70 in-lb).
10. Install the tire and torque the lug nuts to 75 to 88 N·m (55 to 65 ft-lb).
11. Repeat for the other transmission.

Adjusting the Maximum Speed Range

Service Interval: As required

Note: The message display shows two items at a time; however, the following figures show the full menus for context.

1. Park the machine on a level surface, disengage the PTO, and move the motion-control levers outward to the Park position.
2. Enable access to protected menus; refer to **Accessing Protected Menus** (page 25).
3. In the Main menu, scroll down to Service and press the → button .

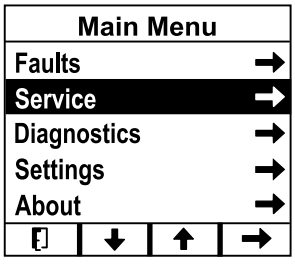

g376300

Figure 62

4. In the Service menu, scroll down to Max Speed Range and press the → button.

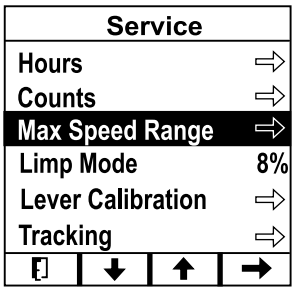

g425331

Figure 63

5. Adjust the maximum speed range as desired.

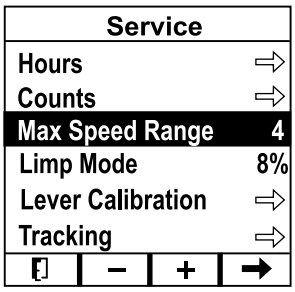

g425330

Figure 64

Note: The number indicates the maximum speed setting (2 through 7) that the operator can select on the main information screen as shown.

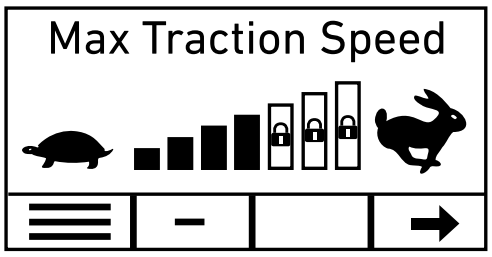

g425332

Figure 65

6. Press the button to save the new value.

Thread Locking Adhesives

Thread locking adhesives such as "Loctite 242" or "Fel-Pro, Pro-Lock Nut Type" are used on the following fasteners:

– ROPS spring pin housing.

Dielectric Grease

Dielectric grease is used on all blade type electrical connections to prevent corrosion and loss of contact. Dielectric grease should not be applied to sealed connectors.

Adjustments

Note: Disengage PTO, shut off engine, wait for all moving parts to stop, engage parking brake, and remove key before servicing, cleaning, or making any adjustments to the machine.

Deck Leveling

1. Position the mower on a flat surface.
2. Stop engine, wait for all moving parts to stop, and remove key. Engage parking brake.
3. Check the tire pressure in drive tires. Proper inflation pressure for tires is 13 psi (90 kPa). Adjust if necessary.
4. Position the transport lock in the latching position.
5. Push the foot pedal all the way forward and the deck will latch at the 5 inch (14 cm) transport position (Figure 66).

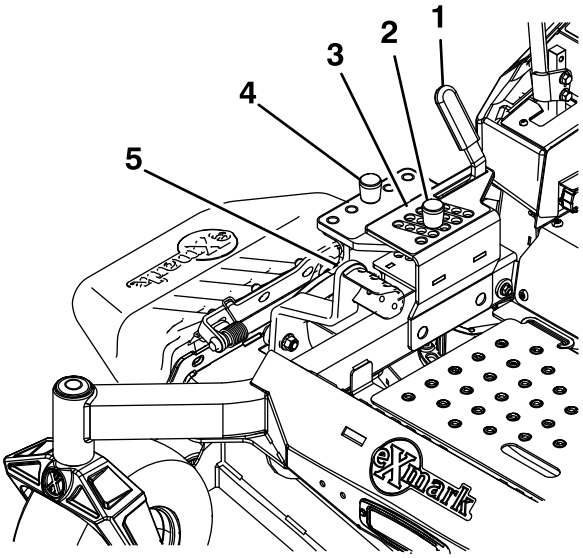

Figure 66

1. Transport lock lever
2. Height adjustment pin
3. Height of cut decal
4. Rake adjustment pin
5. Deck foot pedal

6. Insert the height adjustment pin into the 3 inch (7.6 cm) cutting height location.
7. Release the transport lock and allow the deck to lower to the cutting height.
8. Raise the discharge deflector.
9. Measure from the level surface to the front tip of the center blade. The measurement should read 3 inches (7.6 cm).

Note: In most conditions, the back tips on the side blades should be adjusted 1/4 inch (6.4 mm) higher than the front.

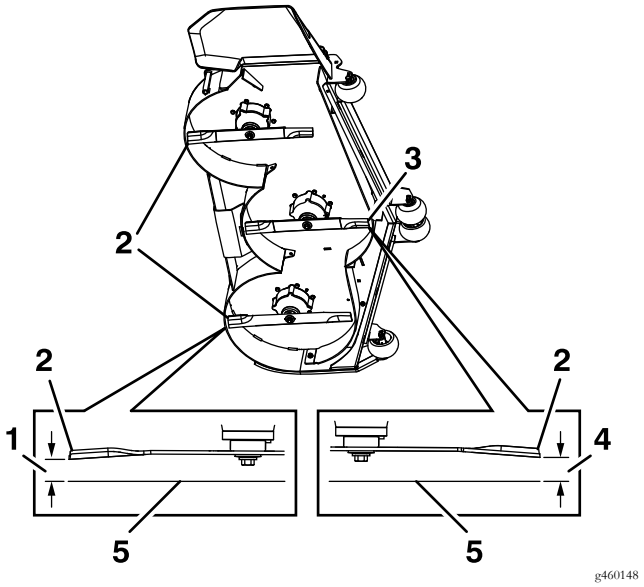

Figure 67

1. 3 1/4 inches (8.3 cm)
2. Back blade tip
3. Front blade tip
4. 3 inches (7.6 cm)
5. Level surface

10. Set anti-scalp rollers to top holes or remove completely for this adjustment.
11. Raise the deck to the transport (5 inch (12.7 cm) cutting height) position.
12. Slowly loosen the adjusting screw on the lift assist spring until the screw can be removed (see Figure 68). Save the screw for reinstallation.

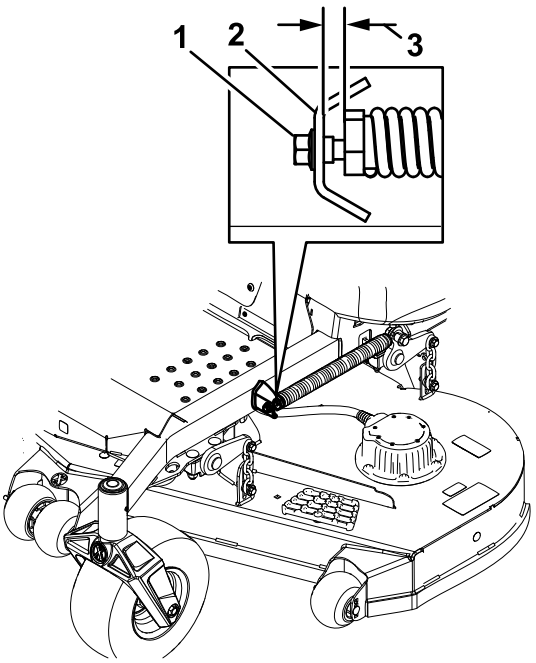

g460151

Figure 68

1. Adjusting screw
2. Bracket
3. Set gap to 1.02-1.28 inch (26-33 mm)

13. Set the height-of-cut lever to the 3 inch (76 mm) position. Place two "B" thick blocks (see Block Height and Rake Table) under the rear edge of the cutting deck skirt; one on each side of the cutting deck. Place two "A" thick blocks under each side of the front edge of the deck, but not under the anti-scalp roller brackets.

Block Height and Rake Table

Front Block Height "A"	Rear Block Height "B"	Rake "R"
2.63 inches (6.7 cm)	2.88 inches (7.3 cm)	1/16–5/16 inch (1.6–7.9 mm)

14. Carefully rotate the blades side to side.
15. Loosen the leveling adjust locking nuts (item 1 Figure 69) on all four corners so that the deck is sitting securely on all four blocks. Make sure that the slack is removed from the deck hangers and the deck lift foot lever is pushed back against the stop, then tighten the four leveling adjust locking nuts.

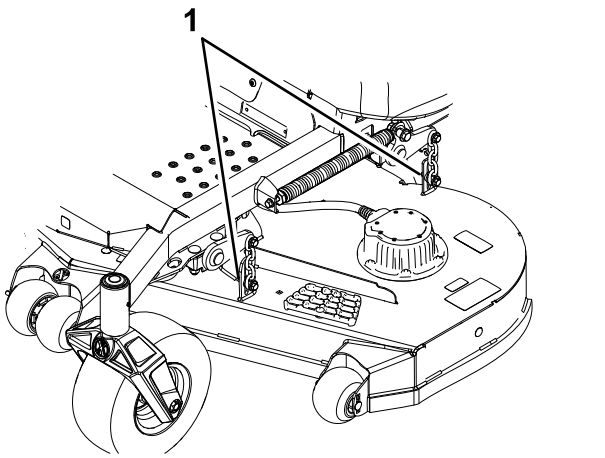

g461090

Figure 69
Left Side Shown

1. Locking nut

16. Recheck that blocks fit just snugly under the deck skirt. Make sure all attachment bolts are tight
17. Continue leveling the deck by checking the front-to-rear blade slope; refer to **Adjusting the Blade Slope.**
18. Recheck blades for levelness and repeat deck leveling procedure if necessary.
19. Raise the deck to the transport (5 inch (12.7 cm) cutting height) position.
20. Reinstall the lift assist spring adjusting screw that was removed in step 12.
21. Set the gap between the spring and bracket to 1.02-1.28 inch (26-33 mm).
22. Lower the discharge deflector.

Adjusting the Blade Slope

1. Check the front-to-rear blade level. If the front blade tip is not "R" (see Block Height and Rake Table in **Deck Leveling**) lower than the rear blade tip, adjust the blade level using the following instructions:
2. Park the machine on a level surface and disengage the blade control switch.
3. Move the motion control levers outward to the neutral position, engage the parking brake, stop the engine, remove the key, and wait for all moving parts to stop before leaving the operating position.
4. Check the air pressure of all four tires. If needed, adjust to the recommended inflation; refer to

Checking the Tire Pressure in Drive System Maintenance section.

5. Check and adjust the side-to-side blade level if you have not checked the setting; refer to **Deck Leveling**.
6. Set the height-of-cut lever to the 3 inch (76 mm) position. Place two "B" thick blocks (see Block Height and Rake Table in **Deck Leveling**) under the rear edge of the cutting deck skirt; one on each side of the cutting deck. Place two "A" thick blocks (see Block Height and Rake Table in **Deck Leveling**) under each side of the front edge of the deck, but not under the anti-scalp roller brackets.
7. Loosen the leveling adjust locking nuts (item 1 Figure 69) on all four corners so that the deck is sitting securely on all four blocks. Make sure that the slack is removed from the deck hangers and the deck lift foot lever is pushed back against the stop, then tighten the four leveling adjust locking nuts.
8. Carefully rotate the blades so they are facing front to rear (Figure 70).
9. Raise the deck to the transport (5 inch (12.7 cm) cutting height) position.
10. Slowly loosen the adjusting screw on the lift assist spring until the screw can be removed (see Figure 68). Save the screw for reinstallation.
11. Measure from the tip of the front blade to the flat surface and the tip of the rear blade to the flat surface (Figure 70). If the front blade tip is not "R" (see Block Height and Rake Table in **Deck Leveling**) lower than the rear blade tip, adjust the front deck hanger.

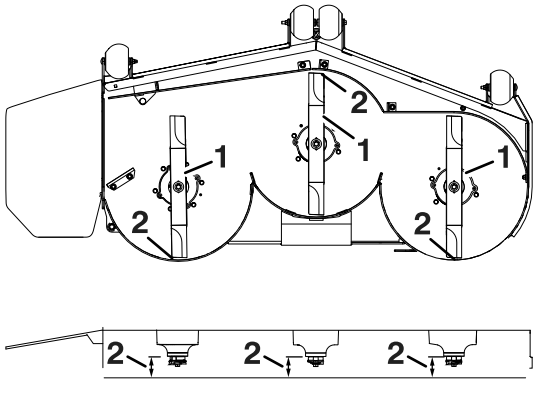

g460885

Figure 70

1. Blades front to rear
2. Measure here

12. When the front-to-rear blade slope is correct check the side-to-side level of the mower again; refer to **Deck Leveling**.
13. Raise the deck to the transport (5 inch (12.7 cm) cutting height) position.
14. Reinstall the lift assist spring adjusting screw that was removed in step 10.
15. Set the gap between the spring and bracket to 1.02-1.28 inch (26-33 mm) (see Figure 68).

Replacing the Discharge Deflector

⚠ DANGER

An uncovered discharge opening allows objects to be thrown toward you or bystanders. Also, contact with the blade could occur. Thrown objects or blade contact will cause serious injury or death.

Do not operate the mower with the discharge deflector raised, removed, or altered unless a grass collection system or mulch kit is in place and working properly.

1. Remove and retain the locknut, bolt, spring, and spacer holding the deflector to the pivot brackets.

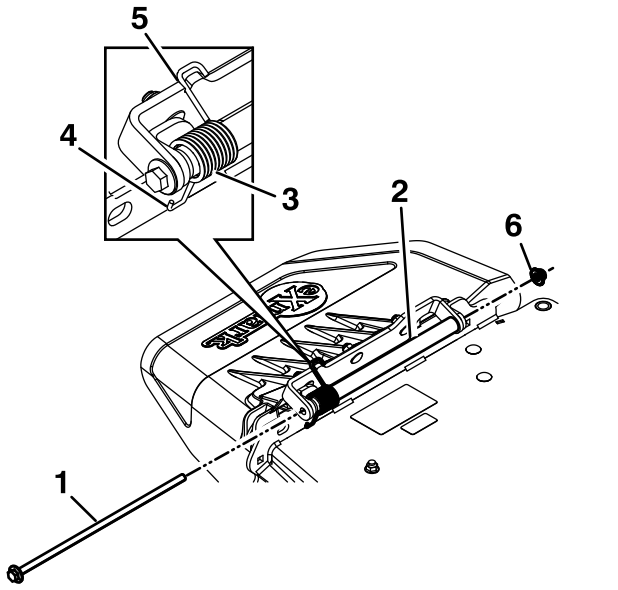

g461399

Figure 71

1. Bolt
2. Spacer
3. Spring
4. Lower J-hook spring end
5. Upper J-hook spring end
6. Locknut

2. Remove the damaged or worn grass deflector.
3. Insert the bolt through the front deck tab and new grass deflector tab. Install the spring and spacer onto the bolt.
4. Place the upper J-hook spring end into the slot of the discharge deflector bracket and hook it to the outside of the bracket as shown in Figure 71. The lower J-hook spring end is located against the inner deck discharge plate.
5. Continue to insert the bolt through the other discharge deflector tab and install the locknut.

Important: The discharge deflector must be able to rotate. Lift the deflector up to the full open position, and ensure that it rotates into the full-down position.

Motion Control Neutral Lock Pivot Adjustment

The flanged nut can be adjusted to obtain a more desired motion control lever resistance (Figure 72).

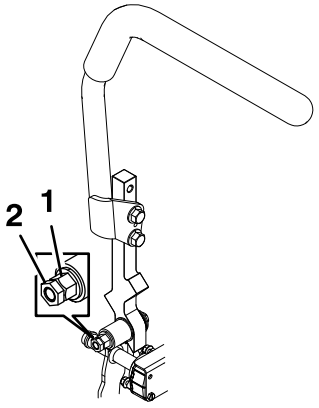

g460980

Figure 72

1. Flanged nut
2. Jam nut

1. Loosen the jam nut.
2. Tighten or loosen the flanged nut to the desired feel.

   For more resistance, tighten the flanged nut.

   For less resistance, loosen the flanged nut
3. Tighten jam nut.

Motion Control Handle Adjustment

Adjusting the height:

The motion control levers can be adjusted higher or lower for maximum operator comfort.

1. Remove the two bolts holding the control lever to the control arm shaft (Figure 73).

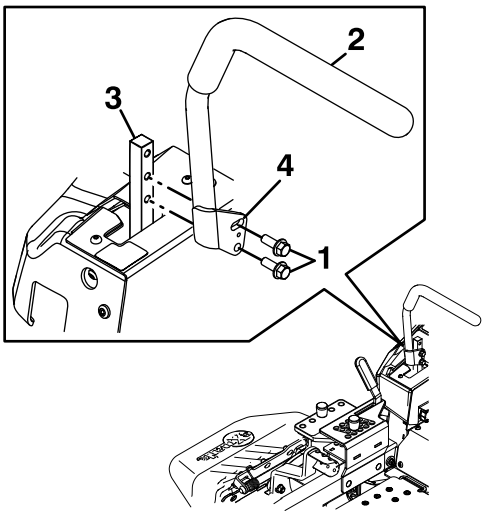

g460890

Figure 73

1. Bolt
2. Control lever
3. Control arm shaft
4. Slotted hole

2. Move the control lever to the next set of holes. Secure the lever with the two bolts.
3. Repeat the adjustment for the opposite control lever.

Adjusting the Tilt

The motion control levers can be tilted fore or aft for maximum operator comfort.

1. Loosen the upper bolt holding the control lever to the control arm shaft.
2. Loosen the lower bolt just enough to pivot the control lever fore or aft Figure 73. Tighten both bolts to secure the control in the new position.
3. Repeat the adjustment for the opposite control lever.

Calibrating the Levers

Note: The message display shows only two items at a time; however, the following figures show the full menus for context.

1. Park the machine on a level surface, disengage the PTO, and move the motion-control levers outward to the Park position.

2. Enable access to protected menus; refer to **Accessing Protected Menus** (page 25).
3. In the Main menu, scroll down to Service and press the → button .

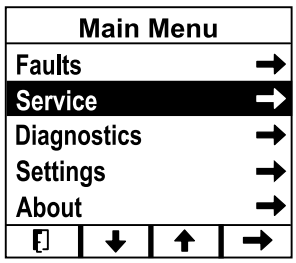

g376300

Figure 74

4. In the Service menu, scroll down to Lever Calibration and press the → button.

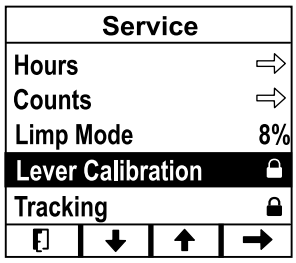

g376304

Figure 75

5. Follow the prompts on the screen. Press the 💾 button after each step; to exit calibration, press the Exit button.

Screen	Action
Lever Calibration Press NEXT to begin	Press the → button.
Left Forward Hold LEFT FORWARD and press SAVE	Hold the left motion-control lever in the full Forward position and press the 💾 button.
Left Reverse Hold LEFT in REVERSE and press SAVE	Hold the left motion-control lever in the full Reverse position and press the 💾 button.
Left Neutral Hold LEFT in NEUTRAL and press SAVE	Hold the left motion-control lever in the Neutral position and press the 💾 button.
Right Forward Hold RIGHT FORWARD and press SAVE	Hold the right motion-control lever in the full Forward position and press the 💾 button.
Right Reverse Hold RIGHT in REVERSE and press SAVE	Hold the right motion-control lever in the full Reverse position and press the 💾 button.
Right Neutral Hold RIGHT in NEUTRAL and press SAVE	Hold the right motion-control lever in the Neutral position and press the 💾 button.
Lever Calibration Calibration Complete Press NEXT	Press the → button.

6. When you complete, exit, or fail calibration, shut off then start the machine to clear the screen.

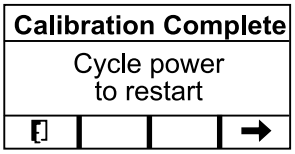

g377652

Figure 76

Adjusting the Tracking

If you push both motion-control levers forward the same distance and the machine pulls to 1 side, adjust the tracking as follows.

Note: The message display shows only two items at a time; however, the following figures show the full menus for context.

1. Park the machine on a level surface, disengage the PTO, and move the motion-control levers outward to the Park position.
2. In the Main menu, scroll down to Service and press the → button.

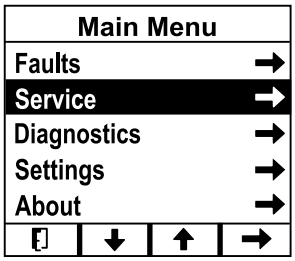

g376300

Figure 77

3. In the Service menu, scroll down to Tracking and press the → button.

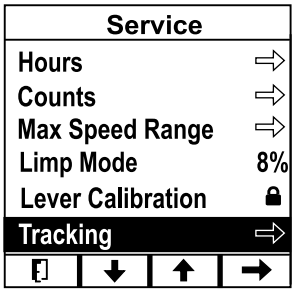

g426844

Figure 78

4. Adjust the tracking to the left or right.

   Note: Adjusting the tracking to the left causes the machine to steer toward the left; adjusting the tracking to the right causes the machine to steer toward the right.

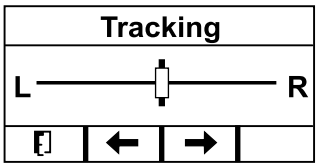

g377650

Figure 79

5. Press the ⊡ button.
6. If more adjustment is needed after adjusting tracking in the display:
   A. Insert a 3/16 inch hex wrench through the access hole on the front cover panel, rotate the tracking screw clockwise or counterclockwise to adjust the travel of the lever.

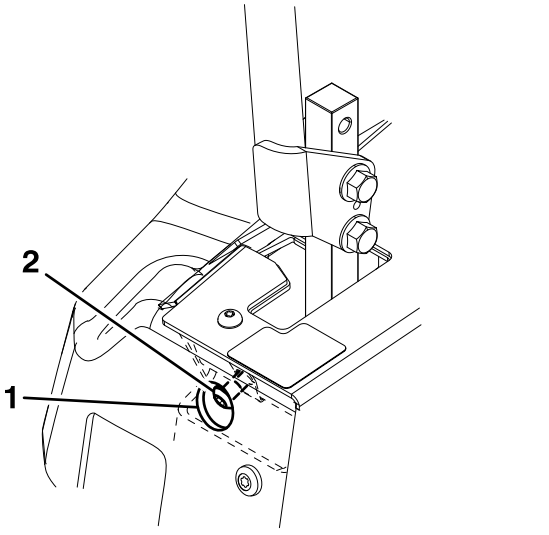

g460957

Figure 80

1. Access hole on front cover panel
2. Tracking screw

   B. Drive the machine and check the full forward tracking.
   C. Repeat steps A and B until desired tracking is obtained.

Caster Pivot and Gauge Wheel Pivot Bearings Pre-Load Adjustment

Remove dust cap from caster and tighten nyloc nut until washers are flat and back off 1/4 of a turn to properly set the pre-load on the bearings. If disassembled, make sure the spring disc washers are reinstalled as shown in Figure 81.

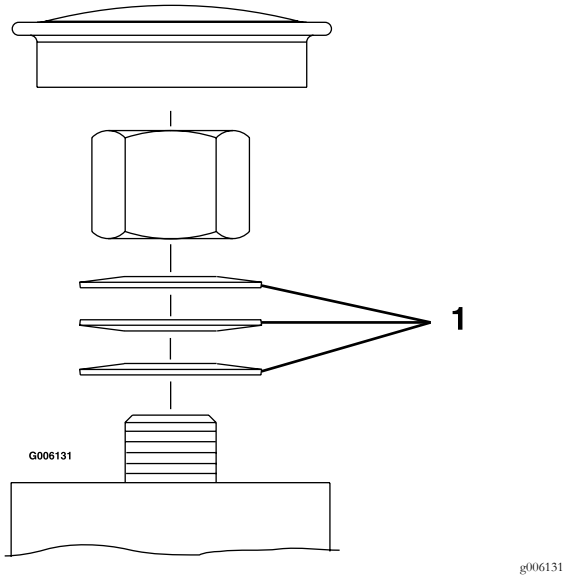

Figure 81

1. Spring disc washers

Cleaning

Cleaning under the Mower Deck

Service Interval: Before each use or daily

Remove the grass buildup under the mower daily.

Important: Do not use water to clean the machine. Water can damage the motors and other electric components. Use compressed air to clean debris from the machine.

⚠ WARNING

Using compressed air improperly to clean the machine could result in serious injury.

- **Wear appropriate personal protective equipment, such as eye protection, hearing protection, and a dust mask.**
- **Do not aim compressed air at any part of your body or at anyone else.**
- **Refer to the manufacturer's instructions for the air compressor for operating and safety information.**

1. Park the machine on a level surface, disengage the PTO, and move the motion-control levers outward to the Park position.
2. Shut off the machine, remove the key, and wait for all moving parts to stop before leaving the operating position.
3. Turn the battery-disconnect switch to the Off position.
4. Raise the front of the machine and use jack stands to support the mower.
5. Clean debris from the machine using compressed air.

Disposing of Waste

Engine oil, batteries, hydraulic fluid, and engine coolant are pollutants to the environment. Dispose of these according to your state and local regulations.

Storage

Cleaning and Storage

Service Interval: Before storage

Before storage

1. Park the machine on a level surface, disengage the PTO, and move the motion-control levers outward to the Park position.
2. Shut off the machine, remove the key, and wait for all moving parts to stop before leaving the operating position.
3. Remove grass clippings, dirt, and grime from the external parts of the entire machine using compressed air.

   Important: Do not use water to clean the machine, otherwise you could damage the motors and other electric components.
4. Check the brake; refer to **Park Brake Position** (page 19).
5. Grease the machine; refer to **Lubricate Grease Fittings** (page 47).
6. Check the tire pressure; refer to **Check Tire Pressures** (page 47).
7. Check and tighten all fasteners. Repair or replace any part that is damaged or missing.
8. Paint all scratched or bare metal surfaces with paint from an Authorized Service Dealer.
9. Store the machine in a clean, dry, garage or storage area. Remove the key from the switch and store it in a memorable place. Cover the machine to protect it and keep it clean.
10. For prolonged storage, follow the battery storage requirements; refer to **Battery Storage Requirements** (page 59).

Battery Storage Requirements

Note: You do not need to remove the batteries from the machine for storage.

Refer to the temperature limits for storage in the following table:

Temperature Limits for Storage

Storage Temperature	Appropriate Storage Time
45° to 55°C (113° to 131°F)	1 week
25° to 45°C (77° to 113°F)	3 weeks
-20° to 25°C (-4° to 77°F)	52 weeks

Important: Temperatures outside of these ranges will damage your batteries.

The temperature that the batteries are stored at will affect their long-term life. Storage for long periods of time at extreme temperatures will reduce the battery life. For temperatures above 25°C (77°F), only store the machine for the appropriate amount of time indicated in the table.

- Before you store the machine, charge or discharge the batteries between 40% to 60% (54.3V to 57.3V).

  Note: A 50% charge is optimal to ensure a maximum battery life. When the batteries are charged to 100% before storage, the battery life shortens.

  If you anticipate that the machine will be stored for a longer period of time, charge the batteries to around 60%.
- For every 6 months of storage, check the battery-charge level and ensure that it is between 40% to 60%. If the charge is below 40%, charge the batteries between 40% to 60%.

- You can use a multimeter to check the charge level when the machine is off. Refer to the following table for the amount of voltage that is equal to the charge level:

Voltage	Charge Level
57.3V	60%
55.4V	50%
54.3V	40%

- After charging the batteries, disconnect the battery charger from power. Disconnect the power connector during storage to minimize the discharging of the batteries.
- If you leave the charger on the machine, it will shut off after the batteries are fully charged and does not turn back on unless the charger is disconnected and reconnected.

Storing the Charger

1. Disconnect the power to the machine; refer to **Using the Battery-Disconnect Switch** (page 44).
2. Disconnect the power supply cord from the charger and coil it securely.
3. Examine the power supply cord thoroughly for signs of wear or damage. Replace it if it is worn or damaged.
4. Examine the charger thoroughly for worn, loose, or damaged parts. To repair or replace parts, contact your Authorized Service Dealer for assistance.
5. Store the charger with the power supply cord in a clean, dry place where it will not be bumped or damaged and not exposed to caustic fumes.

Troubleshooting

Problem	Possible Cause	Corrective Action
The machine does not start or fails to keep running.	1. You are not sitting in the operator's seat. 2. The machine is not charged. 3. The electrical connections are corroded or loose. 4. A fuse is blown. 5. A relay or switch is damaged.	1. Sit on the operator's seat. 2. Charge the machine. 3. Check the electrical connections for good contact. 4. Replace the fuse. 5. Contact an Authorized Service Dealer.
The machine pulls to the left or right (with both motion-control levers fully forward).	1. The tracking needs adjustment. 2. The tire pressure in the drive tires is not correct.	1. Adjust the tracking. 2. Adjust the tire pressure.
There is abnormal vibration.	1. Cutting blade(s) is/are bent or unbalanced. 2. A blade-mounting bolt is loose. 3. A blade spindle is bent.	1. Install new cutting blade(s). 2. Tighten the blade-mounting bolt. 3. Contact an Authorized Service Dealer.
The cutting height is uneven.	1. Blade(s) are not sharp. 2. Cutting blade(s) is/are bent. 3. The mower deck is not level. 4. An anti-scalp roller (if applicable) is not set correctly. 5. The mower deck pitch is wrong. 6. The underside of mower deck is dirty. 7. The tire pressure is not correct. 8. A blade spindle is bent.	1. Sharpen the blade(s). 2. Install new cutting blade(s). 3. Level the mower deck side-to-side position. 4. Adjust the anti-scalp roller. 5. Adjust the front-to-rear pitch. 6. Clean the underside of the mower deck. 7. Adjust the tire pressure. 8. Contact an Authorized Service Dealer.
The blades do not rotate.	1. The safety-interlock system prevents blade rotation. 2. The PTO switch is malfunctioning.	1. Contact an Authorized Service Dealer. 2. Contact an Authorized Service Dealer.

Battery-Charger Error Codes

The battery-charger error codes display on the machine message display as shown in Figure 82.

- SPN: Suspect Parameter Number
- FMI: Failure Mode Indicator
- OC: Number of occurences

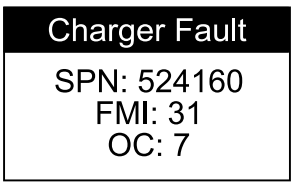

g377956

Figure 82

Troubleshooting

Problem	Possible Cause	Corrective Action
SPN 4992, FMI 16 or FMI 3	1. Battery high voltage	1. Ensure that the battery voltage is correct and the cable connections are secure; ensure that the battery is in good condition.
SPN 4990, FMI 31	1. BMS or battery fault detected	1. Contact an authorized Exmark distributor.
SPN 520196, FMI 16	1. Battery amp hour limit exceeded	1. Possible causes include poor battery health, very deeply discharged battery, poorly connected battery, and/or high parasitic loads on battery while charging. Possible solutions: Replace batteries. Check DC connections. Disconnect parasitic loads. This error will clear once the charger is reset by cycling DC.
SPN 4992, FMI 4	1. Reverse polarity error	1. The battery is connected to the charger incorrectly. Ensure that the battery connections are secure.
SPN 520193, FMI 3	1. High AC voltage error (>270VAC)	1. Connect charger to an AC source that provides stable AC between 85 - 270 VAC / 45-65 Hz.
SPN 524032, FMI 3	1. Charger failed to initialize	1. The charger failed to turn on properly. Disconnect the AC input and battery connection for 30 seconds before retrying.
SPN 520193, FMI4	1. Low AC voltage oscillation error	1. The AC source is unstable. Could be caused by undersized generator or severely undersized input cables. Connect charger to an AC source that provides stable AC between 85 - 270 VAC / 45-65 Hz.
SPN 524033, FMI 31	1. Re-programming failed	1. Software upgrade failure or script operation failure. Ensure that the new software is correct.
SPN 524035 or SPN 524042, FMI 31	1. Communication error with battery	1. Ensure that the connection of the signal wires to the battery is secure.
SPN 524035 or SPN 524042, FMI 9	1. Communication error with battery	1. Ensure that the connection of the signal wires to the battery is secure.

Battery-Charger Fault Codes

Problem	Possible Cause	Corrective Action
SPN 524160, FMI 31	1. Internal charger fault	1. Remove the AC connection and battery connection for a minimum of 30 seconds and retry. If it fails again, please contact an authorized Exmark distributor.

Schematics

Electrical Logic Schematic

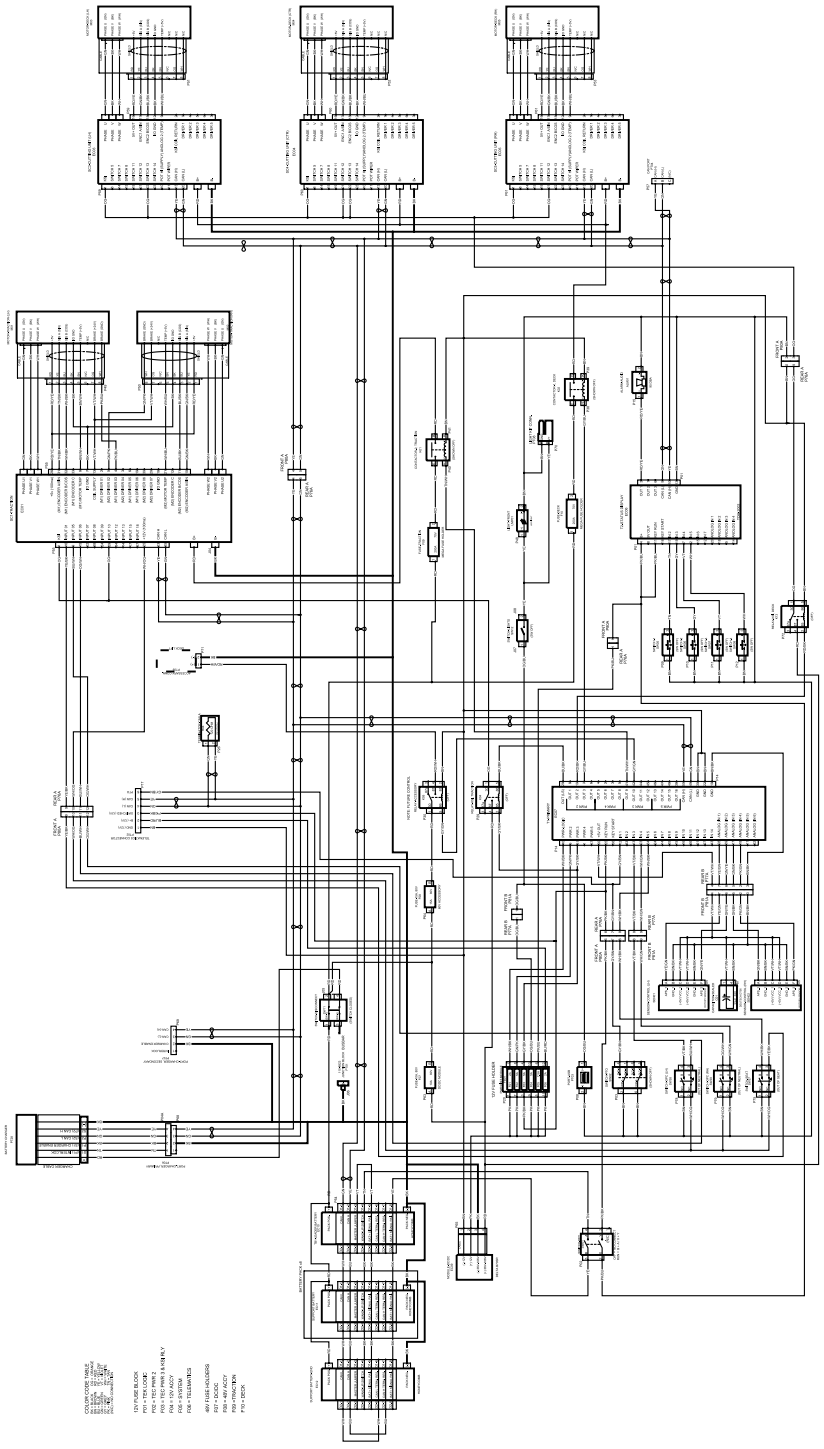

g461413

California Proposition 65 Warning Information

What is this warning?

You may see a product for sale that has a warning label like the following:



WARNING: Cancer and Reproductive Harm—www.p65Warnings.ca.gov.

What is Prop 65?

Prop 65 applies to any company operating in California, selling products in California, or manufacturing products that may be sold in or brought into California. It mandates that the Governor of California maintain and publish a list of chemicals known to cause cancer, birth defects, and/or other reproductive harm. The list, which is updated annually, includes hundreds of chemicals found in many everyday items. The purpose of Prop 65 is to inform the public about exposure to these chemicals.

Prop 65 does not ban the sale of products containing these chemicals but instead requires warnings on any product, product packaging, or literature with the product. Moreover, a Prop 65 warning does not mean that a product is in violation of any product safety standards or requirements. In fact, the California government has clarified that a Prop 65 warning "is not the same as a regulatory decision that a product is 'safe' or 'unsafe.'" Many of these chemicals have been used in everyday products for years without documented harm. For more information, go to https://oag.ca.gov/prop65/faqs-view-all.

A Prop 65 warning means that a company has either (1) evaluated the exposure and has concluded that it exceeds the "no significant risk level"; or (2) has chosen to provide a warning based on its understanding about the presence of a listed chemical without attempting to evaluate the exposure.

Does this law apply everywhere?

Prop 65 warnings are required under California law only. These warnings are seen throughout California in a wide range of settings, including but not limited to restaurants, grocery stores, hotels, schools, and hospitals, and on a wide variety of products. Additionally, some online and mail order retailers provide Prop 65 warnings on their websites or in catalogs.

How do the California warnings compare to federal limits?

Prop 65 standards are often more stringent than federal and international standards. There are various substances that require a Prop 65 warning at levels that are far lower than federal action limits. For example, the Prop 65 standard for warnings for lead is 0.5 µg/day, which is well below the federal and international standards.

Why don't all similar products carry the warning?

- Products sold in California require Prop 65 labelling while similar products sold elsewhere do not.
- A company involved in a Prop 65 lawsuit reaching a settlement may be required to use Prop 65 warnings for its products, but other companies making similar products may have no such requirement.
- The enforcement of Prop 65 is inconsistent.
- Companies may elect not to provide warnings because they conclude that they are not required to do so under Prop 65; a lack of warnings for a product does not mean that the product is free of listed chemicals at similar levels.

Why does Exmark include this warning?

Exmark has chosen to provide consumers with as much information as possible so that they can make informed decisions about the products they buy and use. Exmark provides warnings in certain cases based on its knowledge of the presence of one or more listed chemicals without evaluating the level of exposure, as not all the listed chemicals provide exposure limit requirements. While the exposure from Exmark products may be negligible or well within the "no significant risk" range, out of an abundance of caution, Exmark has elected to provide the Prop 65 warnings. Moreover, if Exmark does not provide these warnings, it could be sued by the State of California or by private parties seeking to enforce Prop 65 and subject to substantial penalties.

Service Record

Date:	Description of Work Done:	Service Done By:

MAXIMIZE THE PERFORMANCE OF YOUR EXMARK MACHINE.



EXMARK® PREMIUM ENGINE OIL

Exmark now offers a family of engine oil viscosities to perform well in any environment. Each viscosity has the same synthetic formulation to give you what you need in punishing conditions. We designed each grade to the highest quality, making it ideal even for diesel applications. Coupled with Exmark Premium Fuel Treatment, we have the performance products to make your machine hum.

EXMARK PREMIUM ENGINE OIL SAE 30/10W-30

- Meets zero shear requirements of a straight grade SAE 30 as well as the cold temp properties of a 10W-30.
- Most versatile oil in the industry.
- Superior corrosion protection over conventional oil - even in corrosive, humid environments.

EXMARK PREMIUM ENGINE OIL SAE 10W-50

- Full synthetic formulation gives you peak performance. Don't settle for less.
- Wide span multi-grade combines easy starting in cold weather with maximum protection in high temperature operation.
- Reduce friction & wear over standard mineral formulations.

EXMARK PREMIUM ENGINE OIL UTV FORMULATION

- 4-cycle high-temp formulation.
- Heavier viscosity, full synthetic, perfect for your UTV.

EXMARK PREMIUM ENGINE OIL SAE 20W-50

- Perfect for your big block engine, or any application in severe service.
- Same full synthetic formulation as all other Exmark Premium viscosities.
- Also effective for use in severe service small block engines.

EXMARK PREMIUM ENGINE OIL SAE 0W-40

- The perfect choice for when the weather turns cold or unpredictable, and your Exmark UTV has to perform.
- Commercial quality for severe service.
- Advanced additive package helps prevent corrosion from long-term storage.

EXMARK PREMIUM UTV EXTREME CONDITIONS GEAR OIL

- SAE 80W-90, designed to keep your UTV performing at its peak.
- Shear stable, hypoid gear lube.
- Includes a premium additive system to combat wear, oxidation, rust & corrosion.

Available from your local Exmark dealer. Find your closest dealer at exmark.com

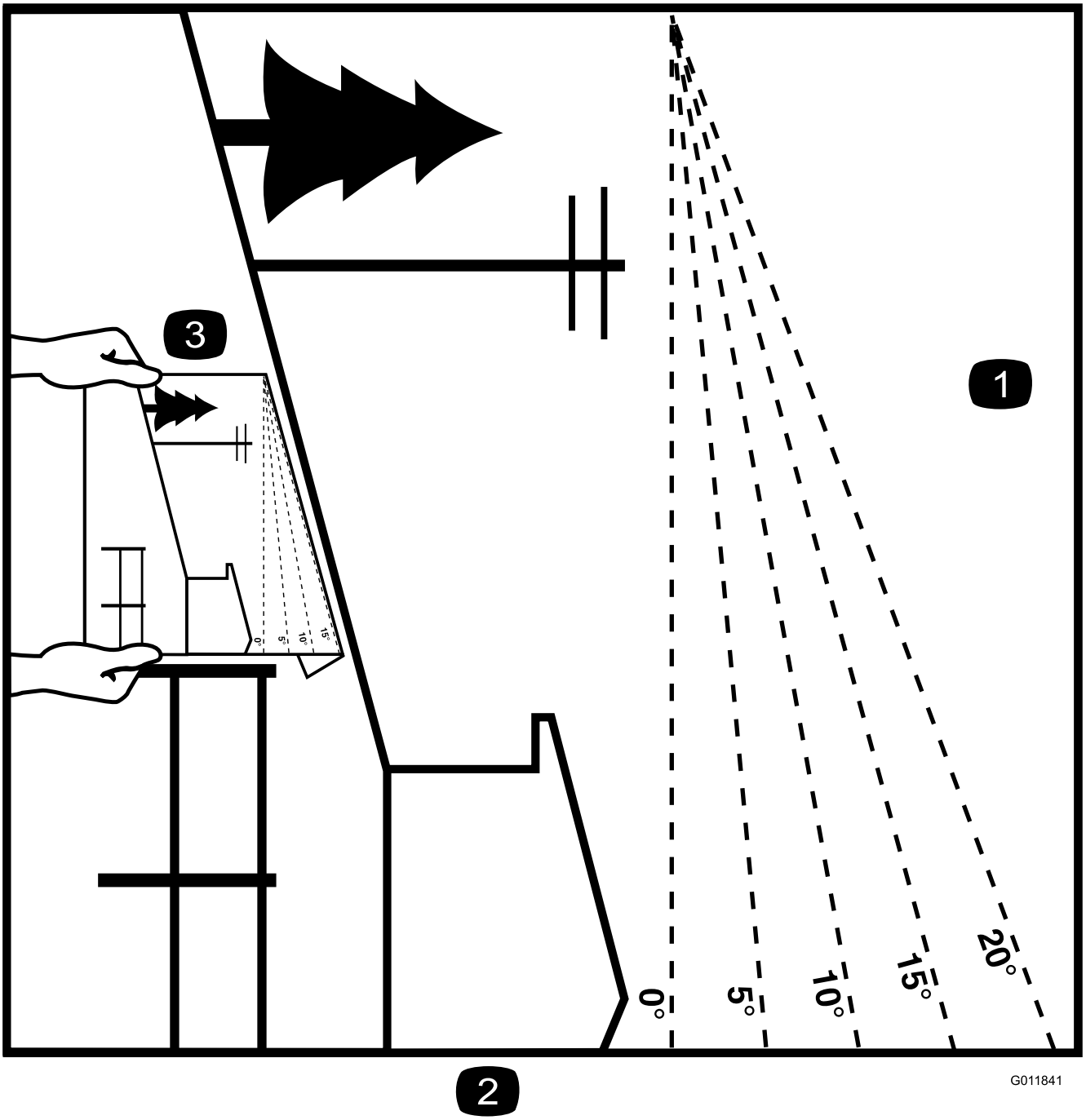

Figure 83

This page may be copied for personal use.

1. The maximum slope you can operate the machine on is **15 degrees**. Use the slope indicator to determine the degree of slope of hills before operating. **Do Not operate this machine on a slope greater than 15 degrees.** Fold along the appropriate line to match the recommended slope.
2. Align this edge with a vertical surface, a tree, building, fence pole, etc.
3. Example of how to compare slope with folded edge.

EXMARK ACCESSORIES AND OPTIONS*

MID-MOUNT RIDING ACCESSORIES AND OPTIONS

CUSTOM RIDE SEAT SUSPENSION SYSTEM
FULL SUSPENSION SEAT
DECK LIFT ASSIST KIT
HITCH KIT
LIGHT KIT
12V POWER PORT
MICRO-MULCH SYSTEM
OPERATOR CONTROLLED DISCHARGE
SUN SHADE
TRASH CONTAINER
TURF STRIPER
ULTRA VAC COLLECTION SYSTEM
ULTRA VAC QUICK DISPOSAL SYSTEM

OUT-FRONT RIDING ACCESSORIES AND OPTIONS

CUSTOM RIDE SEAT SUSPENSION SYSTEM
DUAL-TAIL WHEEL
FLOOR PAN EXTENDER
HITCH KIT
LIGHT KIT
MICRO-MULCH SYSTEM
ROLL OVER PROTECTION SYSTEM (ROPS)
SNOW BLADE
SNOWBLOWER
SUN SHADE
TRASH CONTAINER
ULTRA VAC COLLECTION SYSTEM
ULTRA VAC QUICK DISPOSAL SYSTEM
WEATHER CAB

WALK-BEHIND ACCESSORIES AND OPTIONS

GRASS CATCHER
MICRO-MULCH SYSTEM
TURF STRIPER
STANDON

*Some accessories and options not available for some models.

Place Model No. and Serial No. Label Here (Included in the Literature Pack) or Fill in Below

Model No. _____

Serial No. _____

Date Purchased _____

Engine Model No. and Spec. No. _____

Engine Serial No. (E/No) _____

©2025 Exmark Mfg. Co., Inc.
415 Industrial Row
Beatrice, NE 68310
All Rights Reserved

Part No. 3478-616 Rev. B
(402) 223-6375
Printed in the USA



www.exmark.com