SG-100

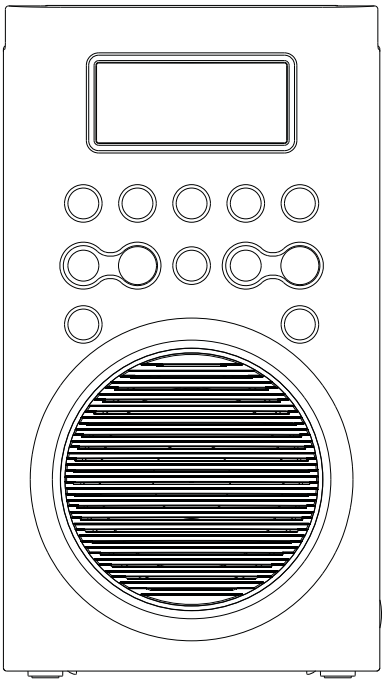

GB

Version 1

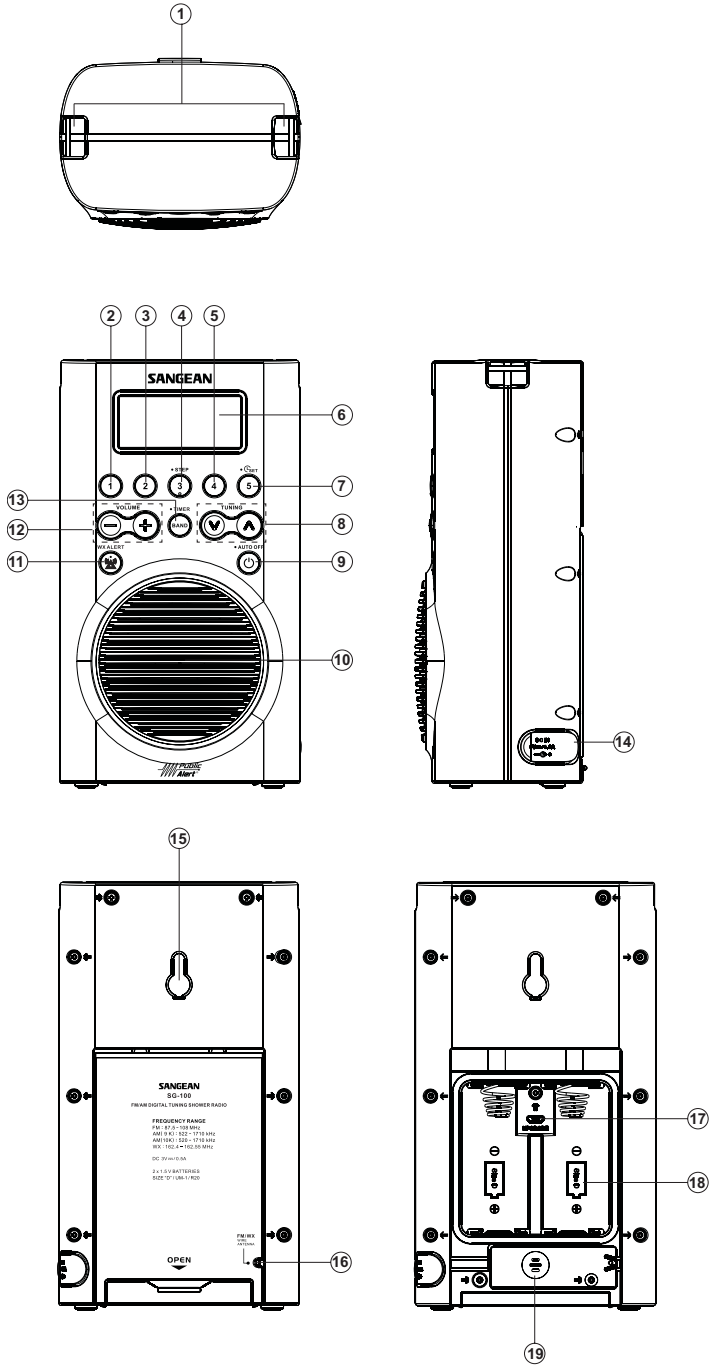
1
2
3
4
5
SANGEAN
6
STEP
SET
7
13
VOLUME
TIMER
TUNING
12
BAND
8
WX ALERT
AUTO OFF
11
9
10
PUDIC
Alert
14
15
SANGEAN
SG-100
FM/AM DIGITAL TUNING SHOWER RADIO
FREQUENCY RANGE
FM : 87.5 ~ 108 MHz
AM(9 K) : 522 ~ 1710 kHz
AM(10K) : 520 ~ 1710 kHz
WX : 162.4 ~ 162.55 MHz
DC 3V/mA/0.5A
2 x 1.5 V BATTERIES
SIZE "D" / UM-1 / R20
FM/WX
OPEN
16
17
18
19

Controls

① Carrying strap holder
② Preset 1
③ Preset 2
④ Preset 3/STEP button
⑤ Preset 4
⑥ LCD display
⑦ Preset 5/ Time Set button
⑧ Tuning Up/Down button
⑨ Power button
⑩ Speaker
⑪ Emergency Buzzer/WX ALERT button(Weather alert button)
⑫ Volume Up/Down button
⑬ Band /Timer button
⑭ DC IN socket
⑮ Hook holder
⑯ Wire antenna hole
⑰ USB socket for software upgrade (for factory or customer services only)
⑱ Battery compartment
⑲ FM/WX wire antenna compartment

LCD display

Ⓐ Battery Power Status
Ⓑ Volume level
Ⓒ Weather Alert indicator
Ⓓ Auto Off status
Ⓔ Short Timer set
Ⓕ Memory number and seconds
Ⓖ Time and Frequency
Ⓗ PM time indicator
Ⓘ Band indicator

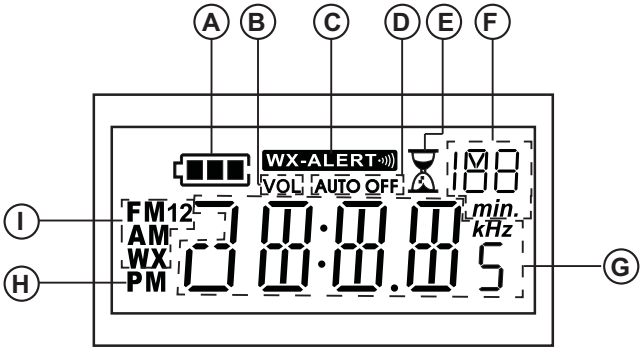

For United States:

Cautions to the user

The changes or modifications not expressly approved by the party responsible for compliance could void the users authority to operate the equipment.

The equipment has been tested and found to comply with the limits for a Class B Digital Device, pursuant to part 15 of the FCC Rules. These limits are designed to provide reasonable protection against harmful interference in a residential installation. This equipment generates, uses and can radiate radio frequency energy and, if not installed and used in accordance with the instruction, may cause harmful interference to radio communication. However, there is no guaranty that interference will not occur in a particular installation. If this equipment does cause harmful interference to radio or television reception, which can be determined by turning the equipment off and on, the user is encouraged to try to correct the interference by one or more of the following measures:

- Reorient or relocate the receiving antenna.
- Increase the separation between the equipment and receiver.
- Connect the equipment into an outlet on a circuit different from that to which the receiver is connected.
- Consult the dealer or an experienced radio / TV technician for help.

Installing batteries

1. Position the radio face down on a soft surface.
2. Open the catch as shown and lift up the battery cover.
3. Insert 2 x “D” size/UM-1/R20 batteries.
4. Replace the battery cover and catch.
5. Reduced power, distortion, a “stuttering” sound are all signs that the batteries may need replacing. The batteries should be replaced when the battery indicator flashes and E shows in the display.
6. If the radio is not to be used for any extended period of time, it is recommended that the batteries are removed from the radio.

IMPORTANT:

Batteries should not be exposed to excessive heat such as direct sunlight, fire or the like. After use, disposable batteries should be taken to a suitable recycling center. On no account should batteries be disposed of by incineration. Do not leave batteries within reach of young children, they can be a choking hazard.

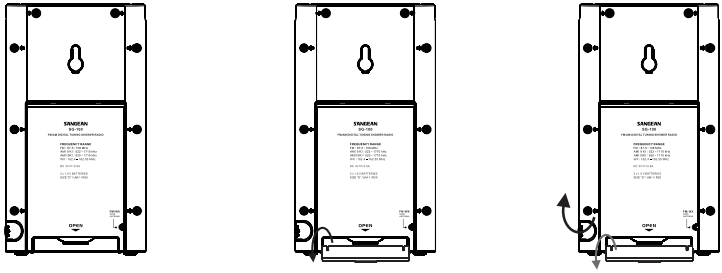

Using the AC adaptor (not supplied)

1. Open the rubber cover of DC in socket on the right hand side of your radio.
2. Insert the adaptor plug into the DC socket.
3. Plug the adaptor into a standard AC outlet. Whenever the adaptor is used, the batteries are automatically disconnected. The AC adaptor should be disconnected from the AC outlet when not in use.

GB

Note:

For safety purpose, DO NOT use AC adaptor in the shower room. Use batteries only.

IMPORTANT:

The AC adaptor is used as the means of connecting the radio to the power supply. The AC Adaptor used for the radio must remain accessible during normal use in order to disconnect the radio from the power supply completely, the AC Adaptor should be removed from the power supply outlet completely when not in use for long periods of time.

Setting the clock

1. The clock will start running when the batteries are installed or when the radio is connected to an AC Outlet. The display will show “ -- : -- -- ”.
2. The time can only be set when the radio is switched off.
3. Press and hold down the Time Set button (5) for approx. 2 seconds until the hours digits flash in the display and a beep is heard.
4. Press the Tuning Up/Down buttons to set the required hour.
5. Press the Time Set button (5), the minute digits will flash in the display.
6. Press the Tuning Up/Down buttons to set the required minute.
7. Press the Time Set button (5) to complete time setting. The seconds will start to count. The radio will display a 12 hour clock with an AM or PM indicator.

Operating your radio

Your radio is equipped with three tuning methods – Manual Tuning, Search tuning and Memory preset tuning.

Manual Tuning

1. Press the Power button to turn on the radio.
2. Select the required frequency band by repeatedly pressing the Band button. For the FM frequency band, pull out and extend the FM wire antenna located in the battery compartment to get best reception. For the AM frequency band, rotate the radio for best reception, the antenna is built inside the radio.
3. A single press on either Tuning up or Tuning down buttons will change the frequency in the following increments:
   FM: 100 or 200 kHz (USA version)
   50 or 100 kHz (standard version)
   AM: 9 or 10 kHz
4. When the frequency band end is reached, the radio will continue tuning from the opposite frequency band end.
5. Press the Volume Up/Down buttons to the required level.
6. To switch off your radio, press the Power button. The display will show “OFF”.

Search tuning.

1. Press the Power button to turn on the radio.
2. Press the Band button to select the required band, then extend and position the wire antenna (FM) or rotate the radio (AM) to get best reception.
3. Press and hold the Tuning Up/Down button to start the search tuning. Your radio will scan in an upwards direction (low frequency to high frequency) or downwards direction (high frequency to low frequency) and stop automatically when it finds a station of sufficient strength.
4. When the frequency band end is reached, the radio will continue tuning from the opposite frequency band end.
5. Press the Volume Up/Down buttons to the required level.
6. To switch off your radio, press the Power button. The display will show “OFF”.

Memory preset tuning

Storing stations in preset memories

There are 5 presets for each frequency band (FM1/FM2/AM/WX).

1. Press the Power button to turn on the radio.
2. Tune to the required station using one of the methods previously described.
3. Press and hold the required preset button more than 2 seconds until the preset number appears with an M (memory) and then “Px” will show on the display. The station will be stored under the chosen preset button.
4. Repeat the procedures for the remaining presets.
5. Stations stored in preset memories may be overwritten by following the above procedures.

Recalling preset stations

1. Press the Power button to turn on the radio.
2. Select the required frequency band by pressing the Band button.
3. Momentarily press the required Preset button, the preset number and station frequency will appear in the display.

GB

Software version/FM range setting/Setting tuning step

Software version

The software display cannot be altered and is just for your reference.

1. Turn off the radio.
2. Press and hold the STEP button for 2 seconds until the software version number (e.g. P01) is shown on the display.

FM range setting

The FM Broadcasting Band tuning range can be different depending on where in the world you live. It may be necessary to adjust the FM range to allow the radio to tune properly.

1. After the software version is shown on the display, continue pressing and holding the STEP button until the FM range setting (e.g. F00) appears and flashes on the display.
2. Press the Tuning Up/Down button to select the desired FM range and press the STEP button to confirm the setting.
   The available FM range is as following:
   F00: 87.5-108 MHz (North America) (default). Your radio is pre-set with this tuning range, no adjustments are necessary if you live in North America.
   F01: 76-90 MHz (for Japan)
   F02: 64-108 MHz (for Eastern European countries and Russia)
   F03: 76-108 MHz (for some of China area and European countries)

Setting tuning step

1. After the FM range setting is completed, FM tuning step setting will flash on the display (e.g. FM 100). Press the Tuning Up/Down button to select the desired FM tuning step (50 kHz or 100 kHz) and press the STEP button to confirm the setting.
2. After the confirmation of FM tuning step, press the Tuning Up/Down button to choose the desired AM tuning step (9 kHz or 10 kHz) and press the STEP button to confirm the setting.

Note:

The tuning steps for North America are FM: 100 kHz and AM: 10 kHz

The rest of the world is FM: 50 kHz and AM: 9 kHz

Note:

Change in the AM tuning step setting will result in the removal of AM presets stored in the radio, this is not the case for your FM tuning steps.

Weather alert system

The weather alert function on the radio can alert you to special weather related emergencies. During an emergency or weather related hazard, NOAA issues an emergency tone that will set off an audible and/ or visual alarm on the radio.

Note:

Hazard warnings are not available in all areas. There are 7 standard NOAA weather channels used in the US and Canada. The radio receives broadcasts up to 40 miles from transmitting stations.

1. To listen to the standard NOAA weather channels, turn on the radio and extend the FM/WX wire antenna located in the battery compartment to get better reception. Then press the Band button until WX shows on the display.
2. The channel number of the weather station is shown on the display. Press the Tuning up/ down button to select the programmed channels. There should be one or more weather service stations broadcasting in your local area. You will hear a report that is updated usually once or more per day for your area. If there is a severe weather or weather-related emergency, NOAA will update weather broadcast more frequently. If there is a weather emergency, NOAA will issue an alert tone.

Setting the weather alert

1. Following the steps above to tune the required weather station.
2. Press and release the WX ALERT button (WX ALERT) to activate the weather alert mode. WX-ALERT will show on the display. If NOAA issues a weather related emergency, the radio will automatically alert you with a siren continuing for 15 seconds. After 15 seconds of siren, your radio will return to normal broadcasting for 12 minutes. Then your radio will be put into weather alert standby mode.

Note:

1. When the radio is set to weather alert mode, all the buttons on the front panel will be invalid.
2. When the siren is active, pressing any button on the radio will instantly turn the radio to the weather broadcasting channel and cancel the siren. Then press the Power button to return to weather alert standby mode.

Turning off the weather alert

Press and release the WX ALERT button (WX ALERT) to turn off the weather alert. Your radio will then be back in standby mode.

Sleep function – Auto Off

The sleep timer will automatically switch off your radio after a preset time has elapsed.

1. Press and continue to hold down the Power button, the display will cycle through the available sleep times in this order 30-20-10-60-50-40-30…… Release the button when the required sleep time appears in the display. Display will appear “AUTO OFF” and radio will play the last station selected.
2. To cancel the sleep function, press the Power button, the “AUTO OFF” will disappear and the radio will switch off.

GB

Nap timer (short timer)

You can set the Nap timer (short timer) when the radio is on or off.

Press and hold the Timer button, the display will appear ( ) and flash last nap timers time. Press the Tuning Up/Down button to select required nap timers time, press the Timer button again to complete setting.

Nap timer will start to count by seconds, the display will show ( ) and remaining nap timer time. The buzzer will sound for 3 minutes when it reaches the period of time which you have set. Press the Power button to turn the buzzer off.

To turn off the Nap timer before the time is up, press and hold the Timer button again. ( ) will disappear from display.

You can also set memory for the nap timer’s time by long pressing Preset 1-5 button for the timers time you require (the same procedure as Storing a station) and recall it whenever you need to set the timer. e.g. you can store 10 minutes timer in preset 1 and 20 minutes timer in preset 2, so each time after you need to select short timers time, press and hold the Timer button then press preset 1 button to get 10 minutes timer and preset 2 button to get 20 minutes timer and so on.

Factory reset

If you wish to completely reset your radio to its initial state this may be performed by following this procedure. By performing a factory reset, all user entered settings will be erased.

1. Make sure your radio is switched off.
2. Press and hold the Preset button 5 and Band button at the same time for more than 2 seconds, the “DEF” symbol will appear and flash on the display. Continue holding down these two buttons jointly until all the icons show on the display. Now the factory reset is completed.

Display backlight

The display backlight will be switched on for approximately 10 seconds when any button is pressed.

Emergency buzzer

To activate the Emergency buzzer, press and hold the Emergency buzzer button (WX ALERT). Pressing and releasing the Emergency buzzer button (WX ALERT) again or the Power button will switch off the buzzer.

Carrying strap

Using the supplied carrying strap, you may hang or carry the radio whenever needed.

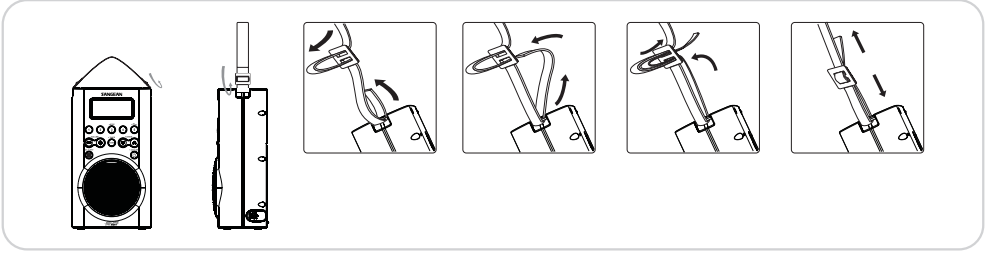

Specifications

GB

Power requirements

AC Power Adaptor (not supplied)

AC 100~240 volts, 50/60 Hz /DC 3V 0.5A

Batteries: 2 x UM1 (D size, R20)

Battery Life:

Approx. 120 hours of listening for 4 hours a day at a normal volume level using alkaline batteries.

Frequency Coverage

FM: 87.50 – 108 MHz

AM (9K): 522 – 1710 kHz

AM (10K): 520 – 1710 kHz

WX: 162.4 – 162.55 MHz

Circuit features

Loudspeaker:	3 inches, 8 ohm full range, water resistant
Output Power:	500 mW
Aerial System:	FM/WX Antenna wire
AM Ferrite Rod:	Built in

Sangean reserves the right to amend the specifications without notice.

If at any time in the future you should need to dispose of this product please note that: Waste electrical products should not be disposed of with household waste. Please recycle where facilities exist. Check with your Local Authority or retailer for recycling advice. (Waste Electrical and Electronic Equipment Directive).