CROWN VERITY

Infinite Series
OWNERS MANUAL

2023

April 21, 2021

GAS-FIRED

C UL US

LISTED

MH64834

DANGER: IF YOU SMELL GAS

1. **Shut off gas to the appliance.**
2. **Extinguish any open flame.**
3. **Open lid and doors and remove any storage cover(s).**
4. **If the odor continues, keep away from the appliance and immediately call your gas supplier or fire department.**

Failure to follow these instructions could result in fire or explosion which could cause property damage, personal injury or death.

WARNING: FOR YOUR SAFETY

DO NOT store or use gasoline or other flammable vapors and liquids in the vicinity of this or any other appliance.

DO NOT check for leaks with a match or open flame.

DO NOT store an LP cylinder that is not connected for use in the vicinity of this or any other appliance.

DO NOT use your unit if there is evidence of damage (cuts, cracks, burns) or excessive wear to the gas supply hose.

DO NOT obstruct the flow of combustion and ventilation air to the unit.

DO NOT place combustibles on the undershelf. Do not stand on the undershelf as it could result in injury or irreparable damage.

DO NOT leave your unit unattended while in operation.

DO NOT use under the influence of alcohol or drugs.

DO NOT use this unit until you have read and understood all of the information in this manual.

WARNING: Instructions to be followed in the event that a user smells gas must be posted in a prominent location. This information shall be obtained by consulting the local gas supplier.

CROWN VERITY

PROUDLY MADE IN NORTH AMERICA

Congratulations and thank you for choosing Crown Verity.

The Infinite Series Product line was developed for high performance and flexibility of design making it distinctly different than any other grill line.

This manual contains important information necessary for the proper and safe use of the product. Please read this manual carefully and follow all warnings and instructions to ensure safe operation and to maximize your cooking enjoyment.

Crown Verity is here to help. Should you ever have any questions about cooking with or caring for your Crown Verity product, please contact our customer service desk at:

1-888-505-7240 or service@crownverity.com

Please have your model number and serial number ready when you call or include it in your email.

Model Number

Serial Number

Note: The serial number and model number can be found on the rating plate (See Appendix A for rating plate references).

THIS MANUAL MUST REMAIN WITH THE PRODUCT OWNER FOR FUTURE REFERENCE.

Understanding Compliance Ratings

There are several standards that apply to Outdoor Cooking Appliances. These standards can be divided into two categories for either residential or commercial applications. It is important to note that these differences in compliance have been put in place to ensure that the outdoor cooking appliance will work properly and safely in the environment for which it is used.

Commercial appliances in general will be used more frequently than a residential appliance as they are typically purchased for commercial applications such as restaurants, resorts, golf courses, etc. As a result, the commercial standards ensure that frequent use of the product and durability is considered. Commercial products also tend to be used by professional Chefs, so the residential standards provide additional safety features to ensure safe operation in residential applications.

Crown Verity recognizes the commercial and residential distinctions but does not want to compromise commercial performance for residential compliance. As a result, the Infinite series has been designed to meet both the residential and commercial standards for outdoor cooking appliances. This ensures both performance and safety for all of our customers.

The Infinite Series of products were tested at Underwriters Laboratories (UL) and meet or exceed the following standards:

RESIDENTIAL STANDARDS

ANSI Z21.58 2018	Outdoor Cooking Gas Appliances
CSA 1.6 2018	Outdoor Cooking Gas Appliances

COMMERCIAL STANDARDS

ANSI Z83.11 2016	Gas Food Service Equipment
CSA 1.8 2016	Gas Food Service Equipment

These standards will be noted on the rating plates of the appliances (See “Appendix A” for rating plate references).

For your Safety

WARNING: This appliance shall be used only in a well-ventilated space and shall not be used in a building, garage, or any other enclosed area. Ensure that the clearances to combustibles are adhered to as listed in this manual.

WARNING: Improper installation, adjustment, alteration, service or maintenance can cause property damage, injury or death. Please read the operating and maintenance instructions provided in this manual thoroughly before installing or servicing this equipment. It is your responsibility to see that your units are properly assembled, installed, and cared for.

WARNING: Keep any electrical supply cords and fuel supply hose(s) away from any hot surfaces.

WARNING: This appliance has been tested according to ANSI Z83.11/CSA 1.8 for commercial applications and ANSI Z21.58/CSA 1.6 for residential use. This is an outdoor cooking appliance and is not intended to be installed in or on a boat or recreational vehicle.

IMPORTANT: Damage caused by a failure to heed the warnings or follow the safety instructions and practices described in this manual is not covered by the warranty.

California Proposition 65 Warning

The burning of gas cooking fuel generates some by-products that are on the list of substances which are known by the State of California to cause cancer or reproductive harm. California law requires businesses to warn customers of potential exposure to such substances. To minimize exposure to these substances, always operate the unit according to this Owner's Manual, and ensure you provide proper ventilation when cooking with gas.

Inspecting Your Shipped Appliances

IF SHIPMENT ARRIVES DAMAGED

This product was carefully inspected and tested before leaving the factory. Upon acceptance of the shipment, all freight damage responsibility is relinquished by the freight carrier.

VISIBLE LOSS OR DAMAGE

- Be sure any visible damage to the carton is noted on the freight bill or express receipt and signed by the person making the delivery.
- **FILE CLAIM OR DAMAGES IMMEDIATELY**, regardless of extent of damage

CONCEALED LOSS OR DAMAGE

- If damaged is unnoticed until the appliance is unpacked, notify the transportation company or carrier immediately and file a "concealed damage" claim with them. This should be done within 5 days of the date delivery is made to you. Be sure to hold on to the packaging for inspection. We cannot assume responsibility for damage or loss incurred in transit.

Unpacking and Assembly

The appliance arrives fully assembled and ready to use. Please follow the uncrating and unpacking steps to avoid damage to the product.

The shipping weight on smaller units is approximately 300 lbs. and larger units may weight over 500 lbs.

WARNING: Use two or more people to move or install this unit. Failure to follow instructions can result in personal injuries.

REMOVING THE CARTON

- Remove the staples at the bottom of the carton.
- Lift off the carton
- Cut straps holding the appliance to the pallet. The straps are installed under load, wear protective eyewear when cutting the straps as they may spring back.
- With assistance, remove the appliance from the pallet and place into desired location.

For appliances with wheels, the appliance will not directly roll off of the pallet. An option to safely remove the appliance off the pallet is by lifting one end of the appliance high enough to place a ramp under the wheels and then lift the other end while rolling the appliance off the pallet.

When moving a Crown Verity appliance across uneven surfaces be cautious and move slowly. It is highly recommended that a carpet dolly is used to ensure no damage is caused to the structure of the cart. Failure to do so, will not be covered under the warranty.

INTERIOR PACKING

Crown Verity takes all necessary measures in securing and protecting the appliance to ensure it arrives in the same condition that it left our factory.

BE SURE YOU HAVE REMOVED ALL TIE DOWNS BEFORE USING THE APPLIANCE.

BE SURE YOU HAVE REMOVED ALL OF THE PROTECTIVE PAPER ON THE STAINLESS STEEL SURFACES BEFORE USING THE APPLIANCE.

- Remove any loose items located under the hood, such as the extension rack or any other accessory you may have purchased with your grill/side burner.
- Carefully cut the tie downs securing the cooking grates in place.
- Remove the grates and remove and tie downs around the burners and radiants.
- Remove any stainless-steel protective paper on the exterior of the appliance. It is important to clean any area that you have removed the protective paper, to ensure no glue residue is left over. Using the grill/side burner prior to removing the protective paper will permanently adhere the paper to the appliance and will not be covered under warranty.

Table of Contents

Understanding Compliance Ratings ____ 4

For your Safety ____ 5

California Proposition 65 Warning ____ 5

Inspecting Your Shipped Appliances ____ 6

Unpacking and Assembly ____ 6

Table of Contents ____ 8

Safe Operation ____ 10

Before You Cook- Positioning Your Grill/Side Burner ____ 12

Specifications and Installations ____ 13

- BUILT-IN INSTALLATIONS ____ 14
- CLEARANCE TO COMBUSTIBLES ____ 14
- REAR HOOD CLEARANCE ____ 14
- OVERHEAD PROTECTION AND EXHAUST REMOVAL ____ 15

Built-In Cut-out Dimensions ____ 17

- FIGURE 3. REFERENCE DRAWING FOR CUT-OUT DIMENSIONS ____ 18

Gas Connections ____ 19

- IMPORTANT LP TANK SAFETY INFORMATION ____ 19
- NOTE TO GAS TECHNICIAN ____ 21
- LIQUID PROPANE GAS REQUIREMENTS (20 and 30 POUND CYLINDERS) ____ 22
- NATURAL GAS REQUIREMENTS ____ 29
- BULK SUPPLY LIQUID PROPANE GAS REQUIREMENTS ____ 33

Gas Conversion Kits ____ 35

Leak Test Procedure ____ 35

Electrical Connections – For Appliances Equipped with a Lighting Package ____ 36

Warning! Natural Hazard - Spiders ____ 37

General Operating Procedures ____ 38

- WHILE YOU ARE COOKING ____ 38

Pre-Grill Checklist ____ 39

- BEFORE FIRST USE ____ 39
- BEFORE EACH USE ____ 39
- AT EACH NEW SEASON ____ 40

Lighting Your Grill 40
STANDARD LIGHTING PROCEDURE 40
MANUAL LIGHTING PROCEDURE: 43
Grilling in Windy Conditions 45
Basic Grilling 46
PRE-HEATING 46
TYPES OF COOKING 46
Burner Adjustments 47
Caring for Your Grill 52
Troubleshooting 54
Contacting Crown Verity Customer Care 56
Installation Checklist 57
RESIDENTIAL LIMITED WARRANTY TERMS & CONDITIONS 58
COMMERCIAL LIMITED WARRANTY TERMS & CONDITIONS 60
Appendix "A" 63
Appendix "B" 66
Exploded Parts View 67
Grill Parts List 68

Safe Operation

This manual covers Crown Verity grill and side burner models listed below. Some features and options will vary based upon which model that you purchased. Read this manual thoroughly to ensure proper operations of the specific appliance model(s) purchased.

CROWN VERITY MODELS COVERED BY THIS MANUAL		
BUILT-IN	MODULAR	NON-MODULAR
IBI30	IGM24	IE30
IBI36	IGM36	IE36
IBI42	IGM42	IE42
IBI48	ICM-SB	IE36I
IBI482RD		
IBISC-SB		
IBISB		

WARNING: Certain surfaces of your grill/side burner can get hot enough to cause severe burns. Never leave the appliance unattended when in use to prevent unintentional contact.

WARNING: Children should never be left alone or unattended in an area where a grill/side burner is located. Place your grill/side burner well away from areas where children play. Do not store items that may interest children in or around the appliance, in the cart, or in the masonry enclosure.

IMPORTANT: Improper use or installation of the appliance is dangerous. The grill/side burners produce intense heat and therefore the risk of accidents or potential injuries is increased. Carefully follow all instructions, including the following:

- To reduce the risk of fire, burns or other injury, read this manual thoroughly. Begin by ensuring proper installation and servicing. Do not repair or replace any part of the grill/side burner yourself unless it is specifically recommended in the manual. All other service must be carried out by a licensed gas technician.
- Always have an ABC Fire Extinguisher accessible — never attempt to extinguish a grease fire with water or other liquids.
- Do not use the grill/side burner unless a leak check has been performed on all gas connections. (See INDEX: “Leak Test Procedure” for further details.)
- If you smell gas, there is likely a problem with the installation. If the connections are not perfectly sealed, you can have a small leak resulting in the faint smell of gas, even if the appliance appears to be working properly. Shut the gas supply off to the appliance and call a licensed gas technician to locate and resolve the leak.
- Do not operate the grill/side burner under an unprotected combustible construction. Use only in a well- ventilated area. The unit is for outdoor use only.

- Do not obstruct any of the openings on the grill/side burner or otherwise obstruct the flow of combustion and ventilation air. Do not build the grill/side burner into any combustible structure that is closer than 12 inches (30.5 cm) from the sides and 18 inches (45.7 cm) from the back and top.
- Keep all gas hoses away from the hot surfaces of the grill/side burner, including all external surfaces of the unit.
- Keep all electrical cords away from the hot surfaces of the appliance.
- Ensure proper installation and servicing by following all instructions in this manual and any other instructions or markings provided with this product. Have your unit installed by a licensed gas technician.
- The grill/side burner hood must be fully opened while lighting the appliance. Releasing fuel into a closed grill/side burner before lighting will not make it light sooner or more efficiently. It will only risk explosion and personal injury or death. Never lean over a hot grill/side burner surface or look directly into the appliance when attempting to light.
- Do not heat unopened food containers on the appliance. The buildup of pressure resulting from the heat may cause the container to burst.
- Never lean on any part of the grill/side burner.
- The grill models are equipped with a pilot tube burner. When lighting the pilot, always pay close attention to what you are doing. Make sure the pilot tube burner is lit before attempting to light the main burners.
- When the burners are on, the grill/side burner will become very hot quickly. Use caution when making contact with any part of the unit. The cooking surface will become extremely hot and may cause severe burns. It is recommended that care be taken when touching any part of the unit while operating.
- Never move the appliance when hot. When in use, portions of the grill/side burner are hot enough to cause severe burns.
- Always use dry potholders or gloves on hot surfaces or cooking tools: moist or damp potholders or gloves may cause steam burns. Never use a towel or bulky cloth in place of potholders. Do not let potholders touch hot portions of the grill/side burner surfaces or allow them to get near the open flame.
- Never grill without the grease tray in place. Always ensure the grease tray is pushed all the way to the back of the grill. The grease tray is designed to hold water. Hot grease dripping from food can produce a fire so always put water in the grease tray prior to use.
- Grease is extremely flammable. Let hot grease cool down before attempting to handle or dispose of it. The drip tray should be cleaned of grease on a regular basis.
- The grill/side burner will retain heat after the burners have been turned off, especially the cooking grates. Use caution when coming in contact with the unit immediately after use.

- Be sure all control knobs are in the OFF position and the unit is cool before using any aerosol cleaner on it or near it. The chemical used for aerosol propellant could ignite in the presence of heat. Never use aerosol cleaner on the cooking surfaces.
- For Portable L.P. cylinders: Always shut off the main valve on the L.P. cylinder after each use.

IMPORTANT: NEVER place the grill underneath an overhead combustible surface. The grill must be placed on top of a non-combustible surface.

Before You Cook- Positioning Your Grill/Side Burner

CHOOSING A LOCATION

Important considerations for all grill/side burner placements include exposure to wind, proximity to foot traffic or areas where people congregate.

- Freestanding Grills/Side Burners: position the appliance so that the prevailing winds blow into the front panel, supporting the proper front to back airflow.
- Built-In Grills/Side Burners: located in areas with a prevailing wind, the appliance should be protected by a wind barrier.
- Winds hitting the back of the grill/side burner, may cause issues, as proper ventilation may be impeded.
- Be sure wind does not blow into the back of the grill hood.
- DO NOT place the grill/side burner where it is likely to be bumped into or inadvertently touched by passersby.
- DO NOT place the grill/side burner on a surface that is unable to safely support the weight of the unit as it may topple or tip over.
- DO NOT place the grill/side burner on any surface that would allow it to change position easily or inadvertently.
- When in use, if applicable, always have the casters in the locked position.
- For natural gas and bulk propane models, NEVER place the grill/side burner where the gas hose creates a safety hazard. Tripping over an exposed gas hose may create a gas leak, cause the appliance to tip or topple over or create other serious safety hazards.
- NEVER locate the grill/side burner in a building, breezeway, shed or other such enclosed areas.
- The built-in versions are identical to the freestanding versions, with the exception of the

base. They are available with LP gas cylinders connections up to 100 lbs. They can also be specified for natural gas or bulk propane supply.

- DO NOT place the built-in grill/side burner on a combustible surface.
- The grill/side burner is not intended to be installed in or on a boat or recreational vehicle.
- For ease of use and safe operation, it is recommended the surface on which the grill/side burner sits be at least 36 inches (91.4 cm) high (counter-height) and not more than 42 inches (106.7 cm) high (bar-height).

LEVEL GROUND

It is critical that this appliance is level upon installation. A grill/side burner that is not level will cause erratic burner combustion and inefficient, uneven heating. A carpenter's spirit level should be used to level the grill both front to back and side to side. If the floor is uneven or has a slope, re-leveling may be required each time you move a freestanding unit.

Specifications and Installations

INSTALLATIONS

The installation of this appliance must be in accordance with:

All applicable local codes, or in the absence of local codes; Canada: must conform to current National Standard CAN/CGA B149.1&.2 - natural gas/ propane installation code. U.S.A.: must conform to national Fuel Gas Code, ANSI Z223.1/NFPA 54 edition.

- Use only hoses, regulators and quick disconnects supplied by Crown Verity.
- Maintain minimal clearances to combustible materials (See "Figure 1").
    - ✓ 12 inches (30.5 cm) from side(s)
    - ✓ 18 Inches (45.7 cm) from back
    - ✓ 60 inches (152.4 cm) from Non-combustible overhangs
- Always keep the area surrounding your grill clear of all combustible materials, gasoline, or other flammable liquids.
- Use your grill OUTDOORS ONLY and in a well-ventilated space, preferably 10 ft. (3 m) from dwellings or outbuildings.
- Casters, if applicable, must be locked when the appliance is in operation.
- Keep all gas supply lines as short as possible because gas lines lose pressure over distance and with each elbow and tee that is added. This drop in pressure affects grill performance. (See Appendix "B" for further details.)

BUILT-IN INSTALLATIONS

The Crown Verity Built-In Grills and Side Burners are designed for easy installation into masonry enclosures.

NOTE: Crown Verity built-in grill/side burners are intended either for installation in a built-in enclosure constructed of non-combustible materials or for an installation in a built-in enclosure constructed of combustible material when installed with an insulated jacket.

The built-in enclosures should have ventilation holes to prevent gas build-up in the event of a leak. The deck ledges and counter should be flat and level. (refer to ANSI Z21.58 Standard for Outdoor Cooking Gas Appliances, Section 1.7 Enclosures For Self Contained LP-Gas Supply Systems).

For non-combustible applications, the grills and side burners drop into the opening specified in the cutout detail drawings (See “Figure 3”) and hangs from its countertop trim.

Pay special attention to the provisions shown for gas line hook-up (See “Appendix “B” for further details).

The Built-In and Modular grills and side burners, when equipped with one of the optional light packages, requires that the appliance be connected to a 120-volt, 60 hertz, 15-amp GFI certified outlet by a qualified electrician.

CLEARANCE TO COMBUSTIBLES

Minimum clearance from the sides and back of the grill/side burner to adjacent construction below and above the countertop surface is 12” from the sides and 18” from the back of the hood.

A minimum of 12 inches (30.5 cm) clearance is required on the left and right side of the grill above the countertop for the rotisserie motor and spit rod.

If the grill/side burner is to be placed into a combustible enclosure, an approved insulated jacket is necessary and is available only through your Crown Verity dealer. Crown Verity insulated jackets have been designed and tested specifically for your grill.

REAR HOOD CLEARANCE

A 3.5 inch (8.9 cm) clearance is required behind the rear flange of the grill to allow the hood to open unobstructed. The grill exhausts combustion products and cooking greases to the back. Do not locate the grill where this exhaust will be difficult to clean.

OVERHEAD PROTECTION AND EXHAUST REMOVAL

If installed under any combustible construction the cooking area over the grill/side burner MUST be covered with an exhaust hood. The hood must provide 6 inches (15.2 cm) of overhang on all exposed sides. The exhaust hood shall provide no less than 1,200 CFM for proper exhaust ventilation. The hood must be approved for outdoor installation and provided with a dedicated GFCI protected branch circuit (See “Figure 2” for further details).

FIGURE 1. CLEARANCES TO COMBUSTIBLES

IBI36 with IBI36FDLT Light Package Shown
All appliance covered by this manual are subject to the clearances shown in Figure 1.

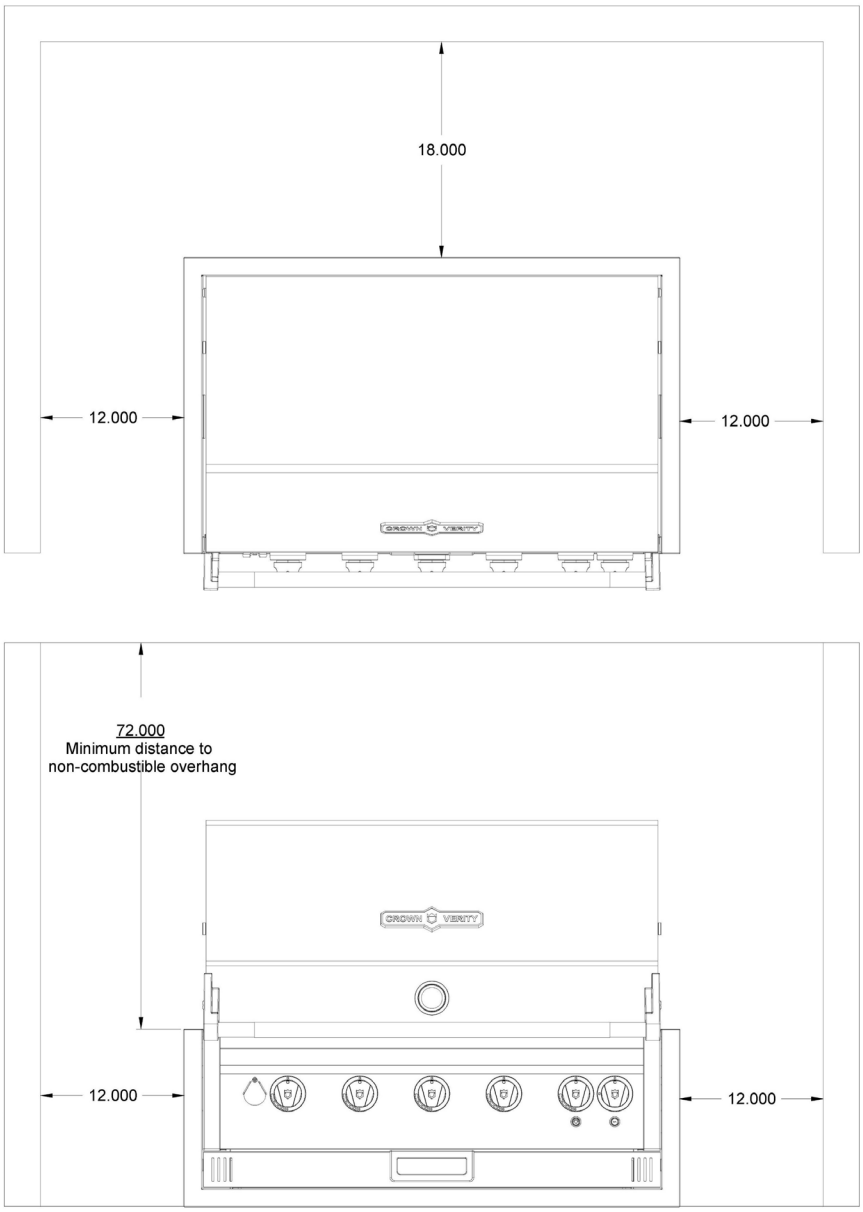

FIGURE 2. EXHAUST HOOD REQUIREMENTS

IBI36 with IBI36FDLT Light Package Shown
All appliance covered by this manual are subject to the clearances shown in Figure 2.

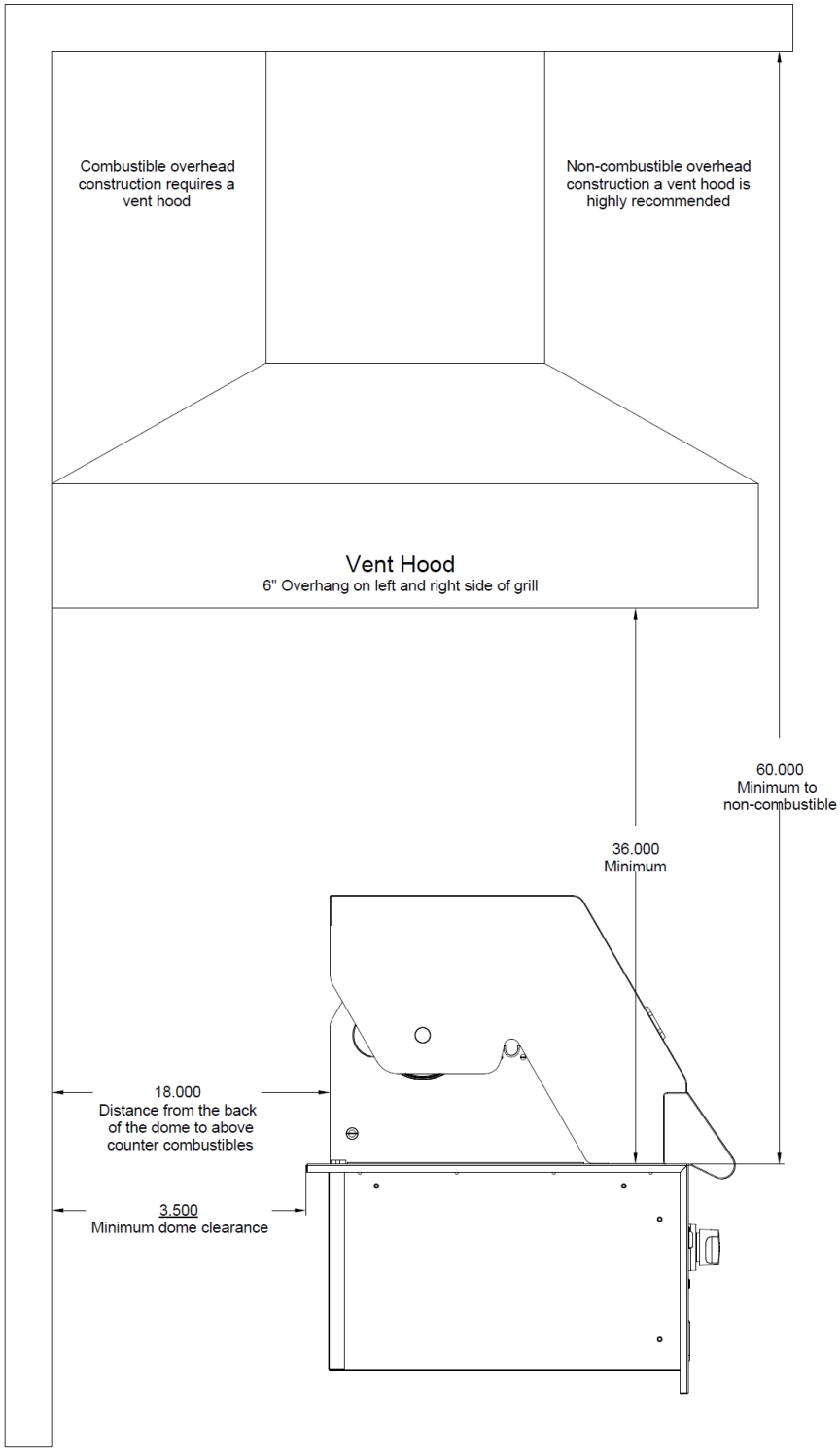

Built-In Cut-out Dimensions

This measurements and dimensions detailed below are designed to assist with planning your outdoor kitchen. Due to continuing product innovation, specifications are subject to change without notice. Please reference the Manual for details on gas plumbing requirements, electrical specifications and the proper installation of your Crown Verity outdoor kitchen equipment.

BUILT-IN GRILLS

	H1	W1	D1
IBI30	13.000	33.000	23.000
(cm)	33.0	83.8	58.4
IBI36	13.000	39.000	23.000
(cm)	33.0	99.0	58.4
IBI42	13.000	45.000	23.000
(cm)	33.0	114.3	58.4
IBI48	13.000	53.375	23.000
(cm)	33.0	135.6	58.4
IBI482RD	13.000	53.375	23.000
(cm)	33.0	135.6	58.4

BUILT-IN SINK

	H8	W8	D8
IBISC-SK	33.000	19.125	24.750
(cm)	83.8	48.6	62.9

BUILT-IN ACCESS DOORS

	H3	W3	D3
IBI-VD	19.125	18.938	3.813
(cm)	48.6	48.1	9.68
	H2	W2	D2
IBI30-HD	12.125	32.625	3.813
(cm)	30.8	82.9	9.68
IBI36-HD	12.125	38.625	3.813
(cm)	30.8	98.1	9.68
IBI42-HD	12.125	44.625	3.813
(cm)	30.8	113.3	9.68
IBI48-HD	12.125	53.125	3.813
(cm)	30.8	134.9	9.68

BUILT-IN SIDE BURNERS

	H6	W6	D6
IBISB	13.000	15.750	23.000
(cm)	33.0	40.0	58.4
	H8	W8	D8
IBISC-SB	33.000	19.125	24.750
(cm)	83.8	48.6	62.9

BUILT-IN STORAGE DRAWERS

	H2	W2	D2
IBI30-DD	12.125	32.625	22.750
(cm)	30.8	82.9	57.8
IBI36-DD	12.125	38.625	22.750
(cm)	30.8	98.1	57.8
IBI42-DD	12.125	44.625	22.750
(cm)	30.8	113.3	57.8
IBI48-DD	12.125	53.125	22.750
(cm)	30.8	134.9	57.8

BUILT-IN STORAGE CABINETS

	H4	W4	D4
IBILC	26.360	18.938	23.000
(cm)	67.0	48.1	58.4
IBISC	18.860	18.938	23.000
(cm)	47.9	48.1	58.4

BUILT-IN ICE CHEST

	H5	W5	D5
CV-IC1	11.125	23.625	23.500
(cm)	28.3	60.0	59.7

BUILT-IN REFRIDGERATION

	H7	W7	D7
CV-RF-1	33.750	24.000	22.000
(cm)	85.7	60.1	55.9

FIGURE 3. REFERENCE DRAWING FOR CUT-OUT DIMENSIONS

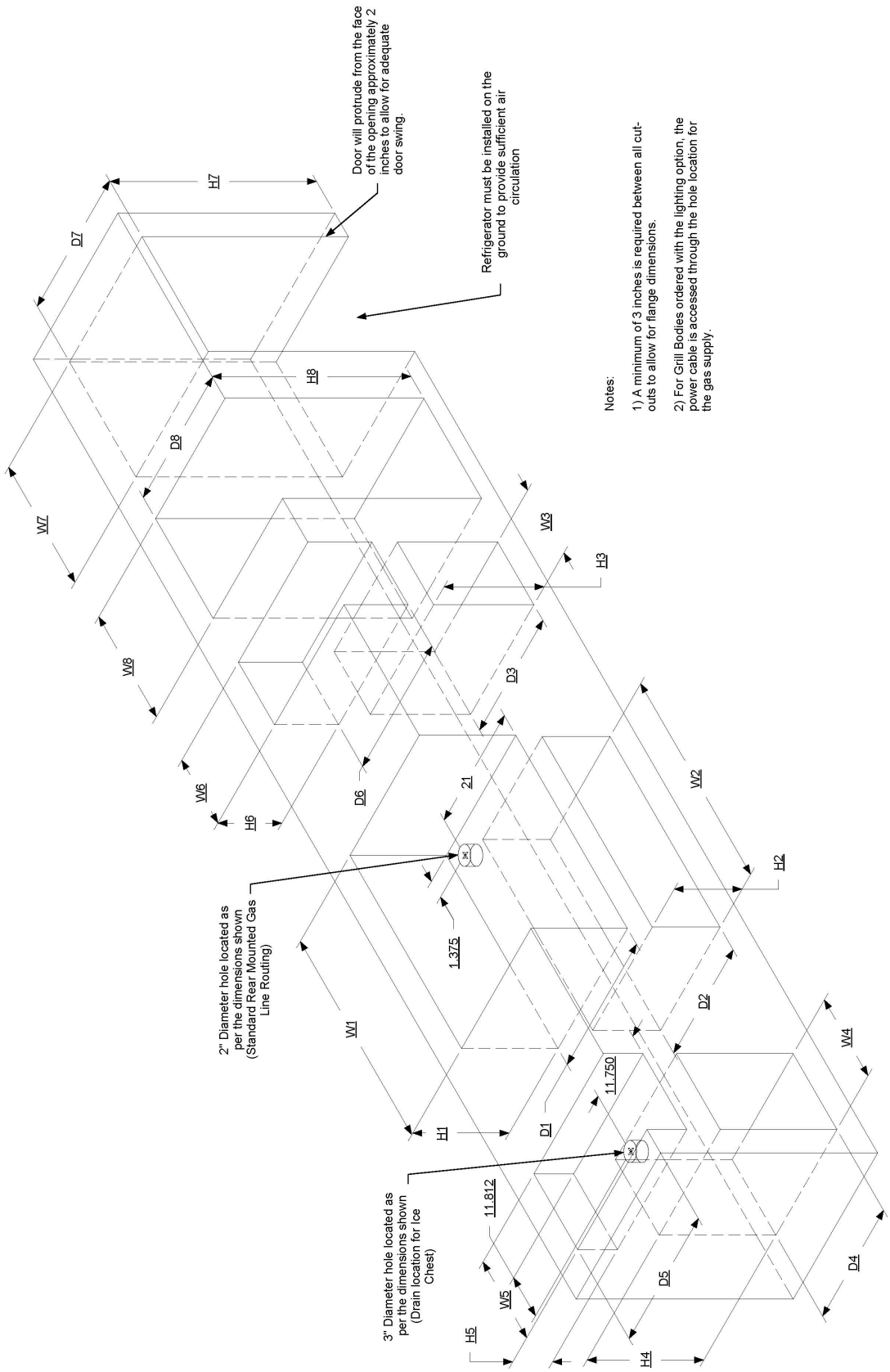

Gas Connections

WARNING: NEVER CONNECT A GAS LINE DIRECTLY TO THE GRILL/SIDE BURNER. A PRESSURE RGULATOR MUST BE INSTALLED ON ALL GAS EQUIPMENT. ALL LOCAL CODES REQUIRE IT AND CROWN VERITY SUPPLIES THE CORRECT REGULATOR WITH YOUR GRILL. REMOVING OR FAILING TO INSTALL THE PRESSURE REGULATOR CAN RESULT IN FIRE AND SERIOUS PERSONAL INJURY AND WILL VOID THE WARRANTY.

IMPORTANT LP TANK SAFETY INFORMATION

Although safe to use when properly handled, careless handling of a propane gas cylinder could result in fire, explosion and/or serious injury.

To avoid risk of fire, explosion or injury, take the following safety precautions:

WARNING: For safety reasons, the LP gas cylinder, if supplied with your grill or side burner, has been shipped empty. The cylinder must be purged of air and filled prior to use.

- The LP-gas supply cylinder to be used must be constructed and marked in accordance with the specifications for LP-gas cylinders, U.S. Department of Transportation (DOT) or the National Standard of Canada for *Cylinders, Spheres and Tubes for the Transportation of Dangerous Goods, CAN/CSA-B339.*
    - ✓ The LP gas cylinder used for this appliance must not have a capacity exceeding 20 lb. (9 kg). Approximately 18” (46cm) high and 12” (31cm) diameter
    - ✓ All LP gas cylinders used with this appliance must be provided with a shutoff valve terminating in a cylinder valve outlet No. 510, specified in the Standard for Compressed Gas Cylinder Valve Outlet and Inlet Connection (USA) ANSI/CGA-V-1-1977 (Canada) CSA B96.
    - ✓ The cylinder supply system must be arranged for vapor withdrawal.
    - ✓ The cylinder must include a collar to protect the cylinder valve.
    - ✓ The cylinder must be installed as per assembly instructions.
    - ✓ Never fill the cylinder beyond 80% full. A fire causing death or serious injury may occur.
    - ✓ The cylinder valve must include a safety relief device having direct communication with the vapor space of the cylinder.

- Never use dented, rusted, or damaged propane cylinders.
- Allow only a qualified LP gas dealer to fill or repair cylinders.

- A liquid propane cylinder should never be “overfilled” beyond the cylinder filling capacity. “Overfilling may create a dangerous condition. “Overfilled” tanks can build up excess pressure. The standard safety device on tanks is the safety relief valve. This valve vents propane gas vapors to relieve excess pressure. These vapors are combustible and can be ignited.
- Make sure the gas dealer checks the cylinder for leaks after filling.
- Do not store spare LP gas cylinders under the grill.
- For built-in cooking gas appliances with a connection to a self-contained 20 or 30 lbs. LP tank, the design lay-out can only accommodate storage for the LP tank currently in use. The design cannot accommodate the storage of a spare tank vertically or horizontally within any enclosure, or under the firebox of the appliance.
- Always use the protective cap provided with your cylinder whenever it is not connected to your grill.
- Never connect the grill to anything other than the fuel source indicated on the rating plate. Conversions are available for switching fuel sources. Contact Crown Verity or an authorized dealer for details. Conversion installation must be done by a licensed gas technician.
- The LP-gas cylinder must include a collar to protect the cylinder valve from damage.
- Ensure proper ventilation of the cylinder. The cylinder supply system must be arranged for vapor withdrawal.
- When the grill/side burner is not in use, the gas must be turned off at the supply cylinder.
- Handling, storage and transportation of propane cylinders must be in accordance with Storage and handling of Liquid Petroleum Gases, ANSI/NFPA 58 or Natural Gas and Propane Installation Code, CSA B149.1
- The grill/side burner may be stored indoors, but only if the cylinder is disconnected and removed from the oven. An LP cylinder MUST NEVER BE STORED INDOORS.
- Cylinders must be stored outdoors and must not be stored in a building, garage, or any other enclosed area. Store in a well-ventilated area.
- Do not store in the vicinity of any gas burning apparatus or in any high heat area such as a closed car or trunk.
- Do not smoke while transporting a LP cylinder in your vehicle.
- Always close the main valve on the tank before disconnecting or transporting the tank.
- Transport and store cylinders in an upright position. Do not tip it on its side
- The pressure regulator and hose assembly supplied with the grill must be used.

Replacement pressure regulators and hose assemblies must be the type specified by Crown Verity and installed by a licensed gas technician. For replacement parts, contact Crown Verity Customer Service at 1-888-505-7240.

NOTE TO GAS TECHNICIAN

WARNING: DO NOT perform any pressure tests on this appliance or the regulator supplied in excess of 1/2 PSIG.

For fixed fuel supply systems. RE: Pressure tests

1. The appliance and its individual shut-off valve must be disconnected from the gas supply piping system during any pressure testing of that system at test pressures in excess of 1/2 psi. (3.45 kPa).
2. The appliance must be isolated from the gas supply piping system by closing its individual manual shut-off valve during any pressure testing of the gas supply piping system at test pressures equal to or less than 1/2 psi. (3.45kPa).

WARNING: DO NOT install any gas handling components/materials affected by elevated temperatures within 18 inches (45.7 cm) of any side of this appliance.

Make sure that the supply line is of adequate capacity to accommodate the higher inputs of the grill before you begin. They are significantly higher inputs than average appliances of this type. The use of a typical corrugated metallic appliance connector is recommended for connecting the appliance, with a minimum inside diameter of 3/4”.

BTU Grills: Table 1

	BTU’s LP Pilot Orifice - 70	BTU’s LP Burner Orifice - 58	BTU’s NG Pilot Orifice - 57	BTU’s NG Burner Orifice - 51	Total BTU’s NG/LP
IBI30	5,500	14,750	5,500	14,750	64,500
IBI36	5,500	14,750	5,500	14,750	79,250
IBI42	5,500	14,750	5,500	14,750	94,000
IBI48	5,500	14,750	5,500	14,750	108,750
IBI482RD	5,500	14,750	5,500	14,750	94,000
IGM24	5,500	14,750	5,500	14,750	49,750
IGM36	5,500	14,750	5,500	14,750	79.250
IGM42	5,500	14,750	5,500	14,750	94,000
IE30	5,500	14,750	5,500	14,750	64,500
IE36	5,500	14,750	5,500	14,750	79,250
IE42	5,500	14,750	5,500	14,750	94,000
IE36I (GRILL)	5,500	14,750	5,500	14,750	79,250

BTU Side Burners: Table 2

	BTU's LP Burner Orifice - 58	BTU's NG Burner Orifice - 52	Total BTU's NG/LP
IBISB	12,000	12,000	24,000
IBISC-SB	12,000	12,000	24,000
ICM-SB	12,000	12,000	24,000
IE36I (SB)	12,000	12,000	24,000

Note: For LP (Liquid Propane) applications, the specified BTU's are calculated at a manifold pressure of 11 inches W.C.. For NG (Natural Gas) applications, the specified BTU's are calculated at a manifold pressure of 4 inches W.C..

For reference, orifice sizes and manifold pressures are indicated on the rating plate of the appliance (See Appendix "A" for further details).

You are encouraged to explain any provisions or concerns you may have regarding the placement of the equipment near or within the supporting structure and the surroundings. Please forward any suggestions you may have should the gas supply components pose any aesthetic problems that the property owner may be concerned with before you begin.

IMPORTANT: Make sure the owner knows where the main gas supply shut off valve is located. For safety and for proper use & care, you must leave this manual with the owner. Make sure you advise them to keep it for future reference. For technical assistance call the Crown Verity customer service desk at: 1-888-505-7240 or service@crownverity.com

LIQUID PROPANE GAS REQUIREMENTS (20 and 30 POUND CYLINDERS)

Verify the type of gas your grill/side burner has been configured for by the factory by checking the rating plate (See Appendix "A" for further details). Grills and side burners configured for liquid propane (LP) gas are orificed differently than appliances configured for natural gas (NG). Grills and side burners configured for use with 20 or 30 pound LP cylinders (Type 1) are shipped with an LP regulator hose assembly attached. They also include a pull-out propane drawer and a label affixed to the outside surface of the cabinet door stating ""FUEL CYLINDER SHUTOFF VALVE BEHIND THIS DOOR". This label is a requirement of the Gas Food Service Equipment standards ANSI Z83.11/CSA 1.8 2016. This label is only required for commercial applications; for residential applications, the label can be removed.

WARNING: Grills with a total BTU's output less than 80,000 BTU's can only be connected to 20 lbs. propane cylinders (See Table1 and 2 for BTU requirements).

WARNING: The propane tank strap provided must be used to hold the propane cylinder in place. Failure to do so can cause damage to the gas supply hose and increases the risk of fire causing death or serious injury (See "Figures 4-6") for further detail.

For built-in applications, not using a Crown Verity built-in cabinet, the propane cylinders must be integrally mounted. An integral mounting means shall be provided on the outdoor cooking gas appliance for mounting the LP gas supply cylinder(s). Integral retention means shall be provided on the outdoor cooking gas appliance to limit the movement of the LP gas cylinder(s). Lateral movement shall not exceed 1 in (25.4 mm) at the retention means, and the cylinder(s) or any portion thereof shall not become dislodged from its (their) retention means when a lateral force equal to the full weight of the cylinder(s) is applied in any direction at the center of the vertical height of the cylinder(s). If the means is for attachment to the protective collar of the cylinder(s) it shall not interfere with the operation of the cylinder(s) valve(s). Any movement shall not transmit strain to rigid tubing or pipe connections. Mounting and retention means shall incorporate adequate adjustments to accommodate the size of the cylinder(s) specified by the manufacturer.

WARNING: For Propane Gas Models: Your grill/side burner is designed to operate on L.P. (propane) gas pressure regulated at 11" water column. The regulator(s) supplied with the grill are set to this pressure and must be used.

Connection: The Type I (Q.C.C.1) cylinder valve is recognizable by the large external thread on the outlet part of the valve. Standard valves do not have these exterior threads. Any attempt to fit the regulator(s) with anything other than the mating Type I (Q.C.C.1) connector, (recognized by the large plastic features designed into the Type I (Q.C.C.1) system. Fitting a standard #510 P.O.L connector, will not provide the flow control or temperature shut-off safety features built into the complete Type I (Q.C.C.1) system. This regulator is equipped with the Type I (Q.C.C.1), quick closing connection system, which incorporates the following features:

- Will not allow gas to flow until a positive seal has been made.
- Has a thermal element that will shut off the flow of gas if subjected to temperatures between 115° and 150°C (240° & 300°F).
- Has a flow limiting device which, when activated, will restrict the flow of gas to 10 cubic feet per hour (25000 BTUs). It activates each time you open the cylinder valve, so be sure the appliance is turned OFF before you open the valve. If the appliance is not turned OFF when you open the valve, the Flow Limiting Device will not be able to reset and will restrict gas flow to the appliance.

FIGURE 4. LP TANK RETENTION STRAP-GRILL/SIDE BURNER CABINET

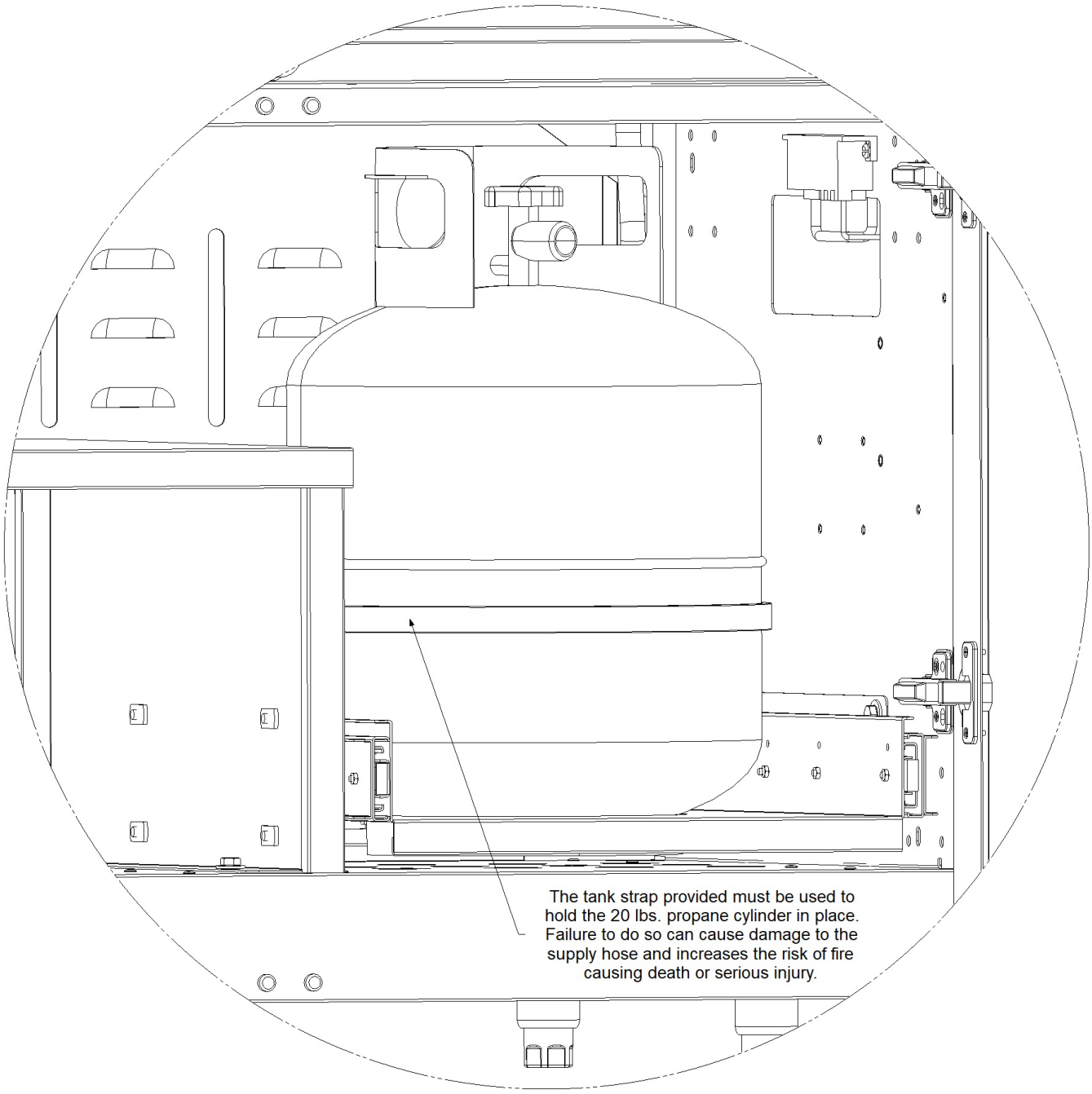

To connect the LP regulator hose assembly to the LP tank, first make sure the main valve on the tank is completely closed. Make sure also that the control valves on the grill are OFF. Thread the regulator inlet over the tank valve. Use care to ensure proper alignment of the threaded coupler and avoid cross-threading or damaging the coupler. Turn the coupler clockwise until tightened up, but do not over-tighten.

After connecting a fresh LP tank, you may need to purge air from the system. Before lighting, open the main valve on the tank. Turn one of the burner control valves on the grill/side burner to the HIGH position for about 15 seconds to purge air from the system. Turn the control valve on the grill OFF and wait 5 minutes for any gas to clear. Finally, continue with the normal lighting procedure.

FIGURE 5. LP TANK RETENTION STRAP-BUILT-IN STORAGE CABINET. NOTE: 30 LBS. TANK SHOWN CAN ONLY BE USED WITH GRILLS THAT HAVE A BTU CAPACITY EQUAL TO OR GREATER THAN 80,000 BTU's.

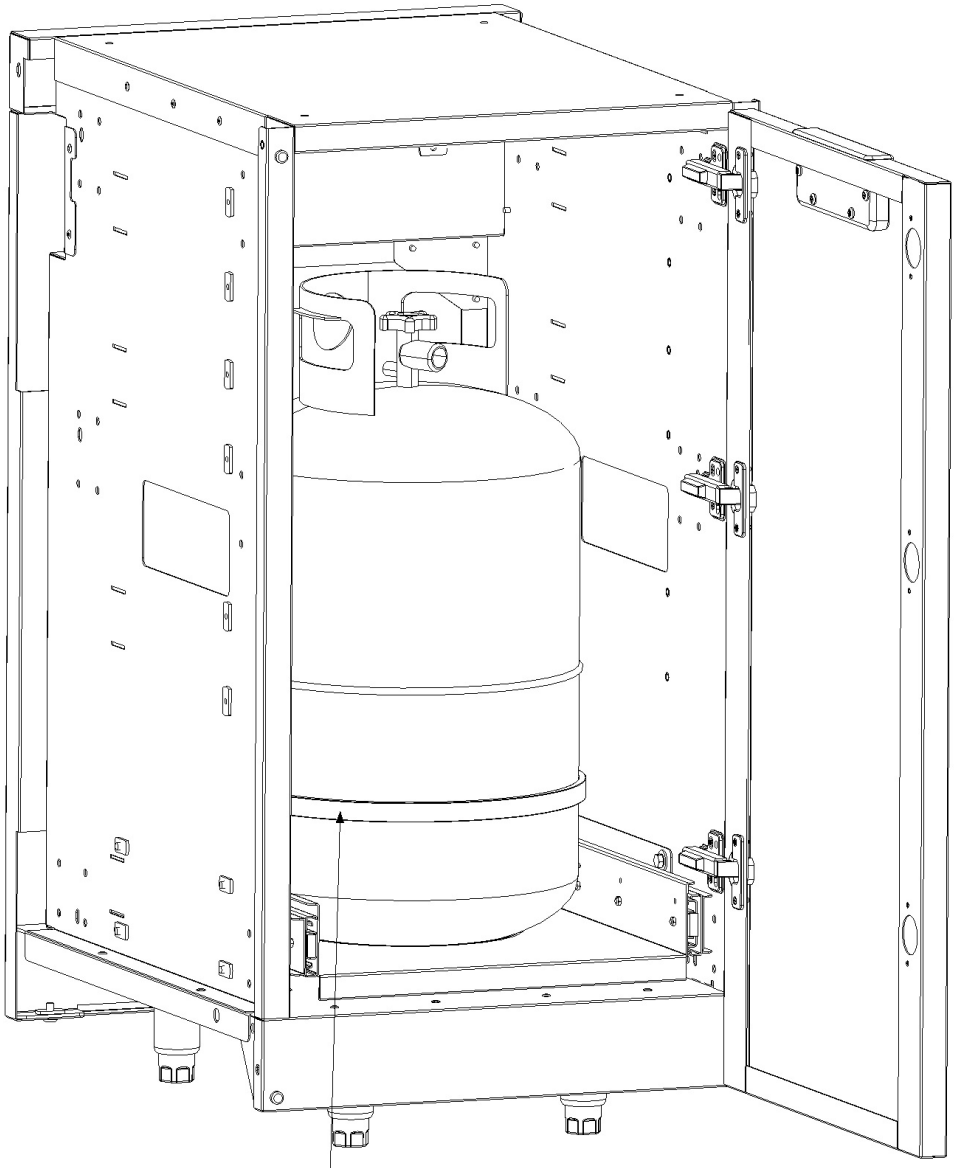

The tank strap provided must be used to hold the propane cylinder in place. Failure to do so can cause damage to the gas supply hose and increases the risk of fire causing death or serious injury.

FIGURE 6. LP TANK RETENTION STRAP-MODULAR STORAGE CABINET. NOTE: 30 LBS. TANK SHOWN CAN ONLY BE USED WITH GRILLS THAT HAVE A BTU CAPACITY EQUAL TO OR GREATER THAN 80,000 BTU's.

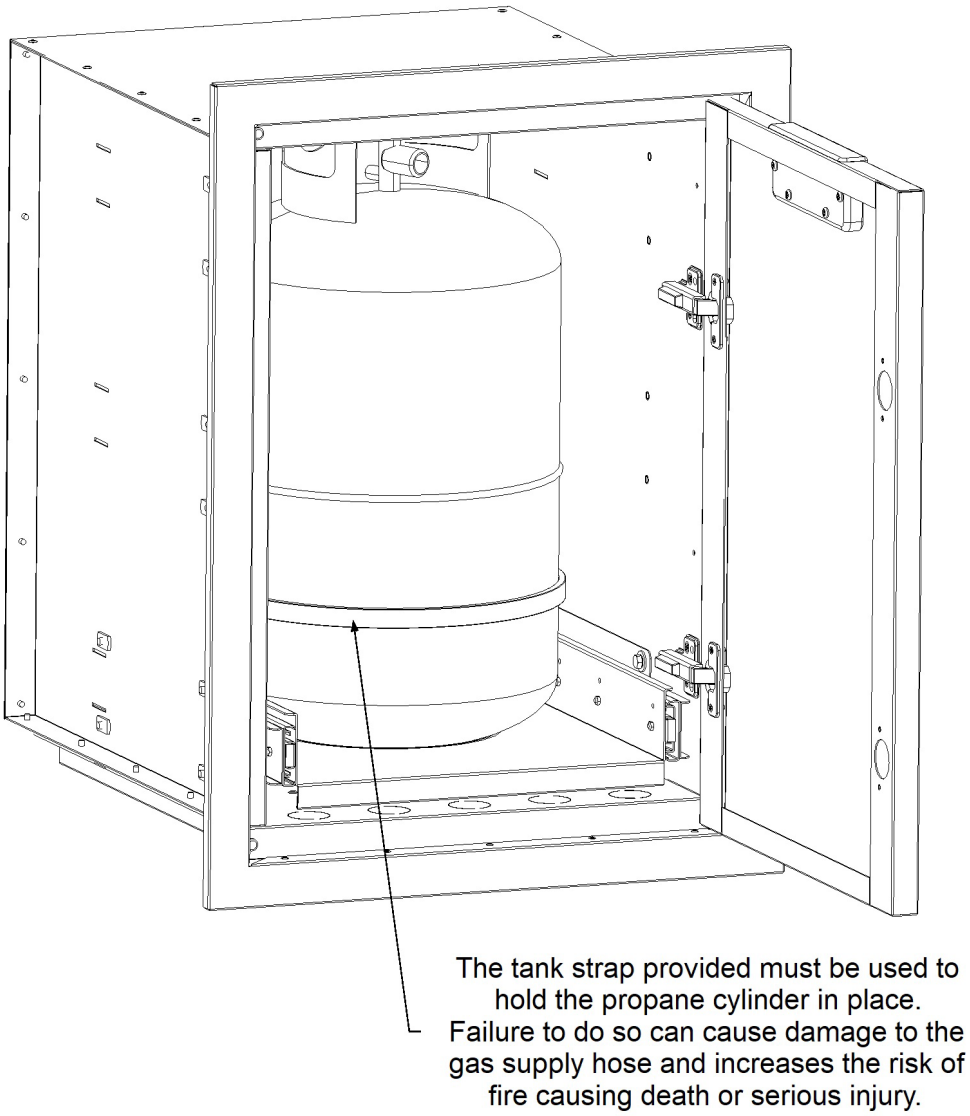

TROUBLESHOOTING: If the large thermally sensitive coupling nut is exposed to temperatures above 115°- 150°C (240° & 300°F) it will soften and allow the regulator probe to Disengage from the cylinder valve, thereby shutting off the flow of gas. Should this occur, do not attempt to reconnect the nut. Remove the entire regulator assembly and replace it with a new one. The cause of the excessive heat should be determined and corrected before operating the grill/side burner again.

The regulator probe also contains a flow-sensing element, which will limit the flow of gas to the regulator to a manageable amount (10 cubic feet per hour) in the event of a

hose or regulator failure, or a leak. If it is evident that the flow-limiting device has activated, the cause of the excessive flow should be determined and corrected before using your grill/side burner again.

Improper lighting procedures can also cause the flow-limiting device to activate, resulting in reduced heat output. If this is suspected, shut off all burner controls and cylinder valve, and carefully repeat lighting instructions step by step. Do not remove the nut and probe and do not attempt to connect to anything other than a mating Type I (Q.C.C.1) cylinder valve.

FIGURE 7. VENTILATION REQUIREMENTS FOR BUILT-IN CABINETS WITH PROPANE CYLINDER STORAGE.

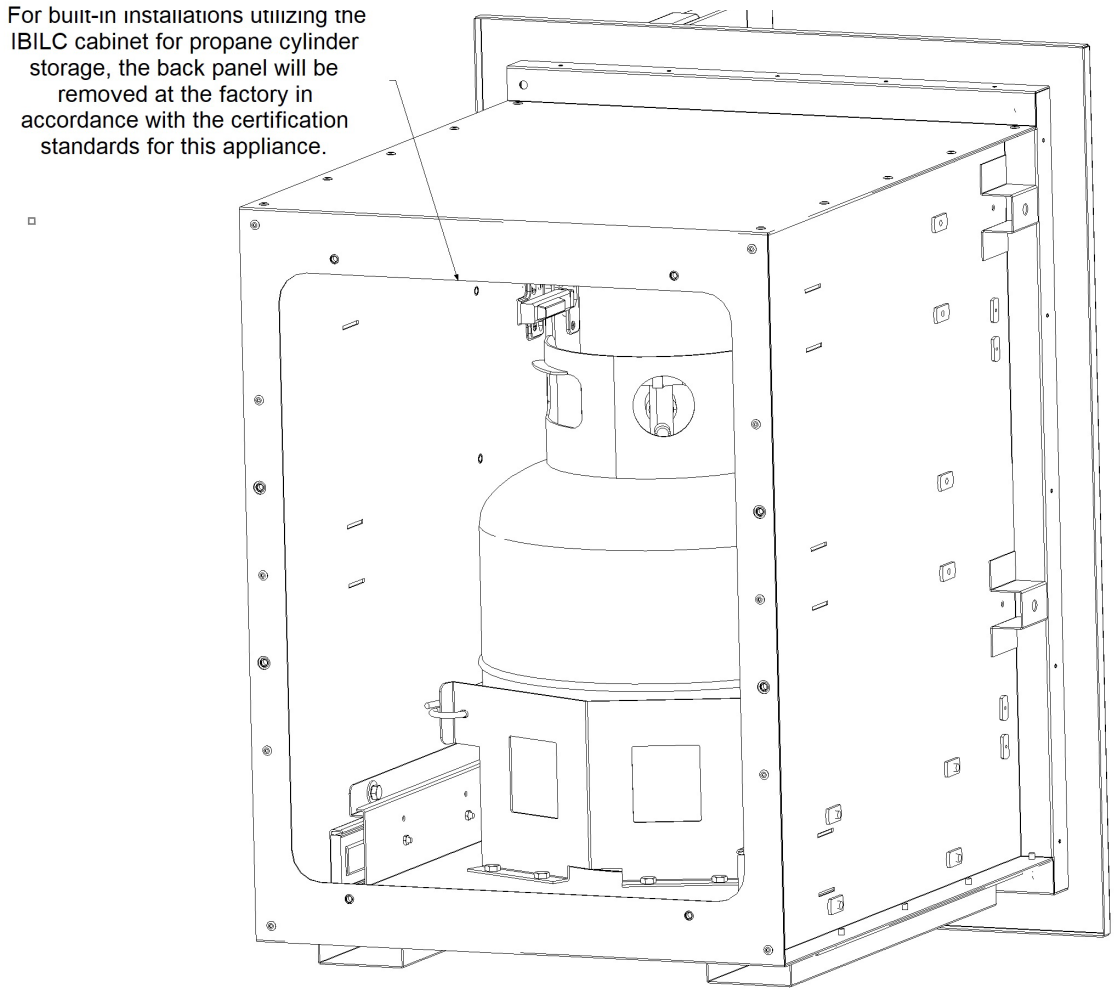

IMPORTANT: When installing the Crown Verity built-in cabinet with propane storage, the bottom of the cabinet there must be a minimum clearance of 2 in (50.8 mm) between the floor of the LP gas cylinder enclosure and the ground.

WARNING: ENCLOSURE REQUIREMENTS FOR BUILT-IN GRILLS AND ACCESSORIES

FOR YOUR SAFTEY, if not using a Crown Verity propane enclosure for a built-in application, you must provide the openings listed below for drainage, replacement air flow and cross ventilation for any storage area exposed to possible leakage from gas connections, the unit, or propane cylinders:

One side of the gas cylinder enclosure left completely open to the outside or by providing four (4) ventilation openings. Two (2) openings are to be at the cylinder valve level (approximately 16 inches (40.6 cm) above the floor) and on opposite walls of the enclosure. Two (2) more openings must be at the floor level on opposite sides of the enclosure. The floor level opening must start at the floor and shall extend no higher than 5 inches (12.7 cm) above the floor. Each opening shall have a minimum of 10 square inches (64.5 cm^2) of free area. To achieve the proper ventilation, you may drill a series of holes, or omit grout from masonry joints, or replace a brick with a hardware cloth screen. If the floor of the cabinet is raised and the space beneath the cabinet is open to the outside, the lower ventilation openings may be in the floor.

Doors on any propane enclosure must be non-locking.

The design of the outdoor built-in propane enclosure must provide adequate access so that the LP gas cylinder can be connected, disconnected, and the connections inspected and tested outside the cylinder enclosure. Consult you gas supplier for venting and regulatory requirements when connecting to household propane supply.

DANGER:

A. **Never connect a propane appliance to an unregulated propane gas supply or other gas type.**

B. **Do not attempt to alter the hose or regulator in any way.**

C. **Do not allow the hose to come in contact with any hot surfaces of the grill.**

D. **Visually inspect the entire length of the hose assembly before each use for any evidence of damage (cuts, cracks, burns) or excessive wear. If found, replace the assembly before using your grill.**

E. **The connection fitting must be protected when disconnected from the LP cylinder. If the fitting is allowed to drag on the ground, damage to the fitting may occur resulting in leaks or an incomplete connection. Dirt could also enter the small inlet hole, blocking gas flow completely.**

The gas supply hose portion must be readily visible across its entire length for inspection. Removal or opening of an access plate(s) or door(s) without the use of tools for inspection purposes is considered acceptable.

A gas appliance pressure regulator shall be installed in a location so that it will not attain a temperature in excess of that specified by the regulator manufacturer as determined during conduct of Clause 5.14, Wall, floor, and component temperatures, or Clause 5.21.5, as applicable per Standard ANSI Z83.11/CSA 1.8. On a built-in unit, the gas appliance pressure regulator shall be installed in a location where pressure adjustments can be made from the front when the appliance is in a normally installed position.

The vent of any fuel cylinder regulator must be protected from adverse weather.

The regulator used on the self-contained LP-gas supply system shall be in a location such that it will not attain a temperature above 140°F (60 °C) when tested in accordance with Clause 5.14, Wall, floor, and component temperatures per Standard ANSI Z83.11/CSA 1.8.

NATURAL GAS REQUIREMENTS

Verify the type of gas your grill/side burner has been configured for by the factory by checking the rating plate on the appliance (See Appendix "A" for further details). Grills and side burners configured for natural gas (NG) are orificed differently than units configured for liquid propane (LP) gas. Appliances configured for use with natural gas are shipped with a regulator fitted with a 3/4 inch flare fitting for the inlet connection.

For the mobile, Non-Modular Grill models, IE30, IE36,IE42 and IE36I, the regulator is positioned inside the cabinet on the right hand back rear corner. The grills are equipped with a with a 10 foot hose, regulator and quick-connect fitting (See "Figure 8" for installation details).

For fixed modular grill and side burner models, IGM24, IGM36, IGM42 and ICM-SB, the regulator is positioned inside the cabinet on the right hand back rear corner. The regulator is fitted with a 3/4 inch male flare fitting and the certified gas installer will connect the gas supply at this fitting (See "Figure 8" for installation details).

For Built-In grills and side burners, the regulator is provided separately. The appliances are equipped with a 1/2 O.D. corrugated gas line with a 3/4 inch female flare fitting. The connection to the regulator and gas supply must be done in accordance with this manual and completed by a certified gas technician (See "Figure 9" for further details).

FIGURE 8. NATURAL GAS CONNECTION FOR FIXED MODULAR AND NON-MODULAR MOBILE GRILLS AND SIDE BURNERS

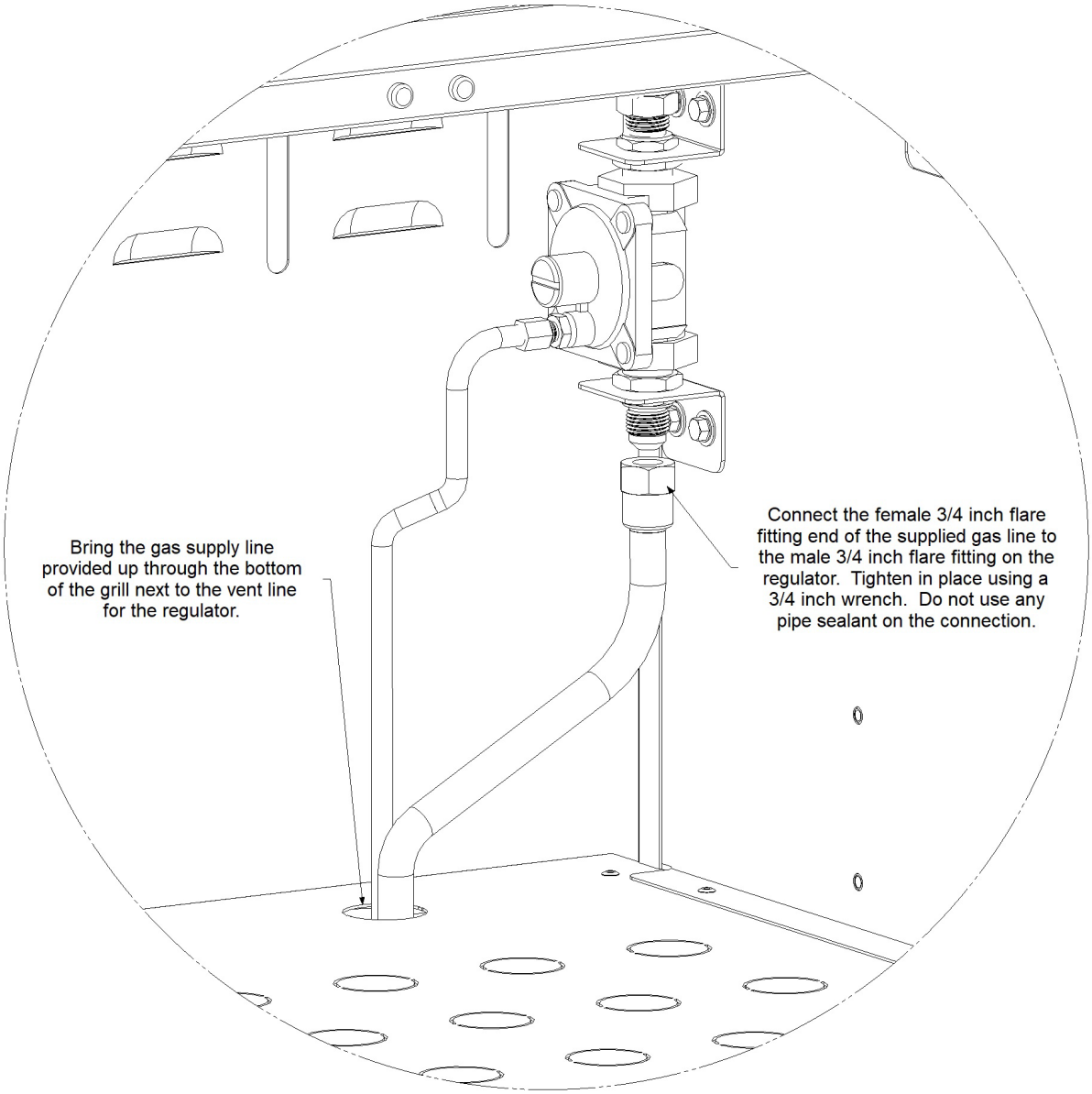

FIGURE 9. NATURAL GAS AND BULK PROPANE CONNECTION FOR BUILT IN GRILLS AND SIDE BURNERS

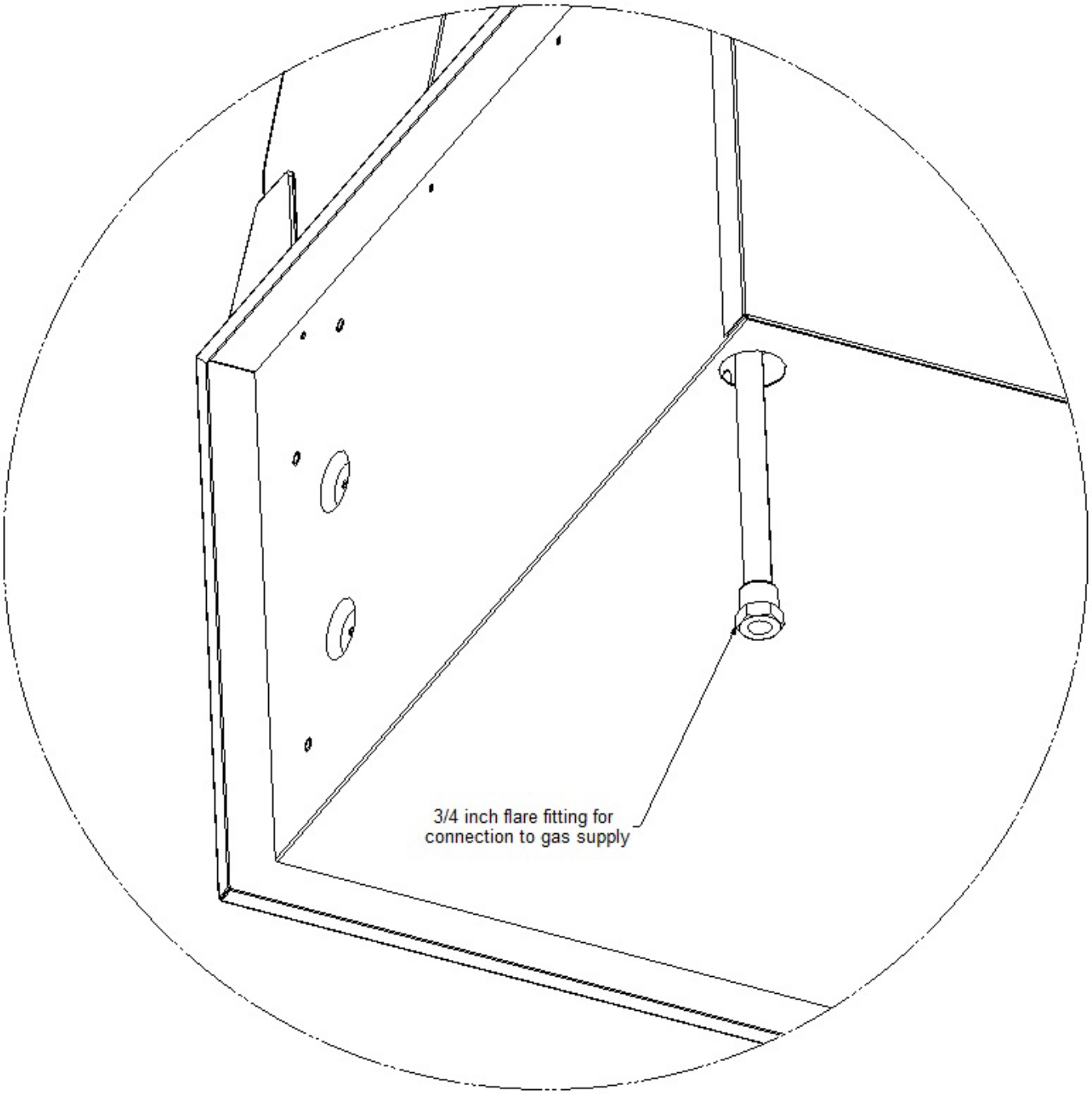

WARNING: For Natural Gas Models: Your appliance is designed to operate on natural gas (NG) pressure regulated at 4” water column. The regulator supplied with the grill is set to this pressure and must be used.

- In no case should an inlet pipe less than 3/4” inside diameter or 1” outside diameter ever be used to connect this product.
- Calculate the total BTU output of all equipment and refer to (See Appendix “B” for further details) for allowable run distances for 3/4 inch pipe. Failure to meet these minimum requirements may reduce performance of the grill and any other appliances running on that supply line.
- Always keep supply line runs as short as possible. (See “Tables 1 and 2” for specific model BTU outputs)
- A gas shut-off valve must be installed in an easily accessible location by a qualified gas technician.
- Do not use threading compound on any flare fittings.

IMPORTANT: Always close the gas supply shutoff valve before disconnecting the appliance’s gas supply hose.

IMPORTANT: An installer-supplied safety shutoff valve **MUST** be installed on the natural gas supply line for the grill/side burner. The valve should be easily accessed and located between 3 and 20 feet (1 to 6 m) away from the appliance (always check with local codes for specified clearances and distances). All gas connections should be made by a licensed technician. The installation and all installer-supplied parts must conform to local codes. In the absence of local codes, the installation and all parts should conform to the National Fuel Gas Code, ANSI Z223.1/ NFPA 54 or Natural Gas and Propane Installation Code, CSA B149.1.

IMPORTANT: Diameter and length of the gas supply pipe may limit the pressure and BTU delivery of gas to the oven. The installer must ensure proper delivery to the appliance or it will not operate properly (See “Appendix B” for further details). The appliance and its individual shutoff valve must be disconnected from the gas supply piping system during any pressure testing of that system at pressures in excess of 1/2 psi (3.5 kPa). During any pressure testing of the gas supply piping system at test pressures equal to or less than 1/2 psi (3.5 kPa), the appliance must be isolated from the system by closing its individual manual shutoff valve.

IMPORTANT: Never run flex hose behind the firebox, run the hose at an angle, straight down, or out of the back.

All pipe sealants must be of an approved type.

BULK SUPPLY LIQUID PROPANE GAS REQUIREMENTS

Verify the type of gas your grill/side burner has been configured for by the factory by checking the rating plate on the unit (See "Appendix A" for further details). Grills and side burners configured for liquid propane (LP) gas are orificed differently than units configured for natural gas (NG). For appliances configured for use with bulk LP tanks, a regulator is not supplied. To purchase these options, please contact Crown Verity at 1-888-505-7240.

FIGURE 10. BULK PROPANE CONNECTION FOR FIXED MODULAR AND NON-MODULAR MOBILE GRILLS AND SIDE BURNERS

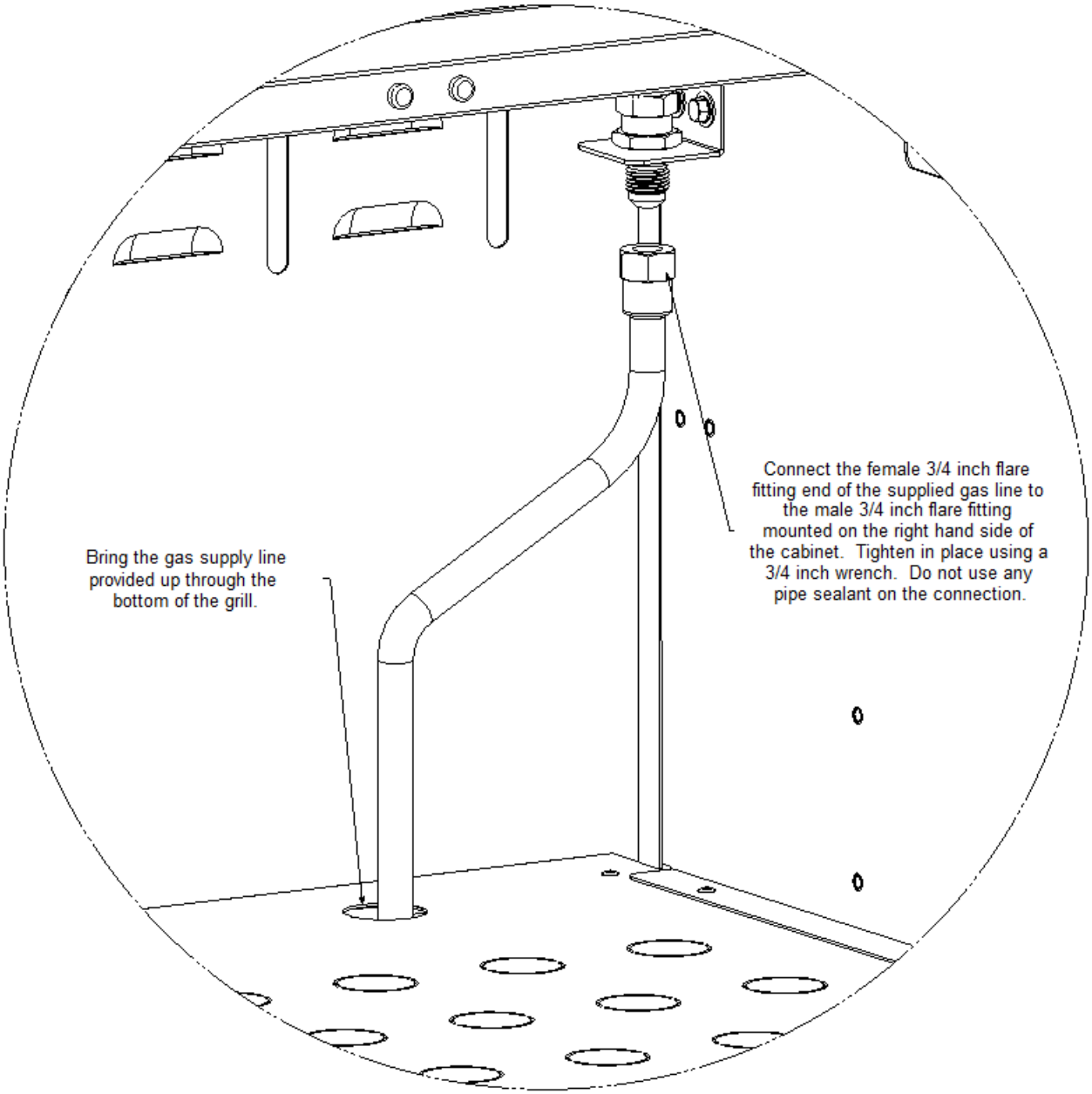

For the mobile, Non-Modular Grill models, IE30, IE36,IE42 and IE36I, the gas supply connection is positioned inside the cabinet on the right hand back rear corner. The grills are equipped with a with a 10 foot (3 m) hose and quick-connect fitting. The regulation of gas from the bulk tank must be adjusted to 11.0 inches W.C., refer to the appliances rating plates in appendix "A" (See "Figure 10" for installation details).

For fixed modular grill and side burner models, IGM24, IGM36, IGM42 and ICM-SB, the gas connection is positioned inside the cabinet on the right hand back rear corner. The connection is fitted with a 3/4 inch male flare fitting and the certified gas installer will connect the gas supply at this fitting. The regulation of gas from the bulk tank must be adjusted to 11.0 inches W.C., refer to the appliances rating plates in appendix "A" (See "Figure 10" for installation details).

For Built-In grills and side burners, the regulator is provided separately. The appliances are equipped with a 1/2 O.D. corrugated gas line with a 3/4 inch female flare fitting. The connection to the regulator and gas supply must be done in accordance with this manual and completed by a certified gas technician. The regulation of gas from the bulk tank must be adjusted to 11.0 inches W.C., refer to the appliances rating plates in appendix "A" (See "Figure 9" for further details).

WARNING: The Operating Pressure of the appliance is 11.0" W.C. A step-down regulator **MUST** be used on an LP house system to reduce the pressure down to 11.0" W.C. for the grill.

IMPORTANT: Always close the gas supply shutoff valve before disconnecting the appliance's gas supply hose.

IMPORTANT: An installer-supplied safety shutoff valve **MUST** be installed on the liquid propane gas supply line for the appliance. The valve should be easily accessed and located between 3 and 20 feet (1 to 6 m) away from the oven. All gas connections should be made by a licensed technician. The installation and all installer-supplied parts must conform to local codes. In the absence of local codes, the installation and all parts should conform to the National Fuel Gas Code, ANSI Z223.1/ NFPA 54 or Natural Gas and Propane Installation Code, CSA B149.1.

IMPORTANT: Diameter and length of the gas supply pipe may limit the pressure and BTU delivery of gas to the unit. The installer must ensure proper delivery to the appliance or it will not operate properly (See Appendix "B" for further details). The appliance and its individual shutoff valve must be disconnected from the gas supply piping system during any pressure testing of that system at pressures in excess of 1/2 psi (3.5 kPa). During any pressure testing of the gas supply piping system at test pressures equal to or less than 1/2 psi (3.5 kPa), the appliance must be isolated from the system by closing its individual manual shutoff valve.

All pipe sealants must be of an approved type.

Gas Conversion Kits

Gas conversion kits are available from Crown Verity to allow the grill to operate on either Natural gas or LPG. These kits should be installed by a qualified gas technician.

The kits come with complete installation instructions. These instructions should be read completely and fully understood before installing the conversion kit.

Please contact the Crown Verity customer service desk at: 1-888-505-7240 or service@crownverity.com for conversion kit requirements.

Leak Test Procedure

Although all gas connections on the grill are leak tested at the factory prior to shipment, a complete test must be performed:

1. After installation due to possible mishandling during shipping or installation.
2. Periodic checks are also required every time the propane cylinder is refilled, any gas component is changed or at least once a year.
3. Immediately check for leaks if you smell gas.

WARNING: Never use an open flame to look for a leak. Perform the leak test outdoors in a well-ventilated area. Extinguish all open flames and keep away from any heat or ignition sources. DO NOT SMOKE! Use only a 50/50 mixture of liquid soap and water for leak testing.

IMPORTANT: Owners should only check for leaks on the gas connections that are external to the grill. If the valves or other internal connections need to be checked, please call a licensed technician or Crown Verity Customer Service at 1-888-505-7240.

For LP units using a 20 or 30 pound cylinder, a full cylinder should be used.

To Conduct the Test:

Make a soap solution of one part liquid dish soap and one part water. Make sure the appliance control valve(s) is in the OFF position. Turn the gas supply ON. Use a spray bottle, brush or rag to apply the mild soap solution to all connections from the supply line or LP cylinder to the connection on the rear of the appliance including the following:

1. Cylinder valve including the threads into the tank.
2. All cylinder welds.

3. Regulator fitting(s) and cylinder connections.
4. All hose connections.

Soap bubbles will appear at any connections with a leak. Turn OFF the gas supply and tighten any leaky connections. Recheck, applying more mild soap solution.

IMPORTANT: Do not use the appliance if any leaks cannot be stopped. Turn off the gass supply valve, remove any gas cylinder and call a licensed gas appliance service technician for proper repairs.

Electrical Connections – For Appliances Equipped with a Lighting Package

WARNING: ELECTRICAL GROUNDING

- Product installation must meet local electrical codes or, in the absence of local codes, the latest edition of the National Electrical Code ANSI/NFPA No. 70 or the Canadian Electrical Code Part 1, CSA 22.1.
- Use only a Ground Fault Interrupter (GFI) protected circuit with this outdoor cooking gas appliance.
- This appliance is equipped with a three prong (grounding) electric plug for your protection against shock hazard and must be plugged directly into a properly grounded three prong outlets. Never cut or remove the grounding prong from this plug.
- Use only extension cords with a 3-prong grounding plug, rated for the power of the equipment, and approved for outdoor use with a “W-A” marking.
- To protect against electric shock, do not immerse any part of the power cord, an extension cord or any plugs in water or other liquid.
- Unplug the product from the outlet when not in use and before cleaning. Allow it to cool before putting on or taking off parts.
- Do not let the cord hang over the edge of a table or touch hot surfaces.
- Do not use an outdoor cooking gas appliance for purposes other than intended.
- Do not operate any outdoor cooking gas appliance with a damaged cord, plug, or after the appliance malfunctions or has been damaged in any manner. Contact the manufacturer for repair.

CONNECTION TO AC

Installation requires an outdoor 120VAC 15A GFI (Ground Fault Interrupter) electrical outlet adjacent to the appliance. The GFI outlet features an internal breaker that reduces shock hazard. This type of outlet should be installed by a qualified electrician either inside the island enclosure for built-in units, or near the location where a free-standing unit will be used.

For built-in grills, the supplied 12VDC should be installed below the grill within the cabinet enclosure. Select a location where the transformer is protected against water, heat and physical damage.

When installing the transformer to the grill be careful to prevent the wiring and transformer from contacting any hot surfaces behind or below the grill. It is recommended that the transformer be located below the grill in a readily accessible location. Be sure to provide adequate access to facilitate service if the transformer or connections should need future maintenance.

If the electrical system fails to operate, a connection may have come loose in shipping or the GFI may have tripped, requiring a reset.

Warning! Natural Hazard - Spiders

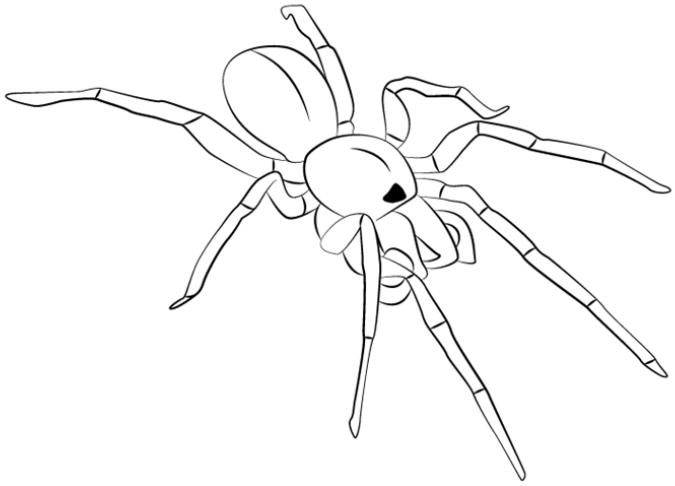

Spiders and other insects are attracted by the smell of gas and could make webs or nests in the burners. This could partially or completely block the flow of gas through the venturis and is indicated by a smoky, yellow flame, and/or a burner that is difficult or impossible to light. Ultimately, it may cause the gas to burn outside the venturis, which can seriously damage your grill. If this happens, immediately shut off the propane at the cylinder, or natural gas at the main shut-off valve. To prevent and/or correct this occurrence, periodically check the venturis for obstructions by inserting a pipe cleaner or flexible wire through the air inlet of the burner and twisting it. Ensure venturi tubes are properly “seated” over the orifices after cleaning.

General Operating Procedures

The grill/side burner reach operating temperatures in approximately 5-8 minutes but may vary depending on environmental conditions. For compliance requirements, the temperature gauge for the grill is specific to the air temperature. There is not a direct correlation between the grill air temperature and the grate temperature, so the actual values will differ.

IMPORTANT: The grill comes equipped with a thermometer. The thermometer only measures the oven temperature which does not correlate directly with the surface temperature of the grates. The grill thermometer may register a slightly different temperature, so it is recommended that you familiarize yourself with the temperature settings and your own personal cooking environment to optimize the temperature setting for the best cooking performance.

IMPORTANT: Practice with your grill to understand the temperature variables and nuances of your unit before hosting your guests.

WHILE YOU ARE COOKING

The appliance surfaces get very hot as will the food you are cooking. Follow these tips while operating the grill:

- Never leave the appliance unattended
- Never move the appliance while it is in use or when it is hot.
- The use of alcohol, prescription or non-prescription drugs may impair your ability to safely operate the appliance.
- Do not touch the top of the appliance, the front shelf, or any surfaces inside or near the door opening while the oven is hot. These surfaces can cause serious burns.
- Be very careful transporting any hot food items. They can cause serious burns to yourself or those around you.
- Only use long-handled tools to clean the cooking surface. The handle must be long enough that your hands stay safely outside of the appliance's cooking surface.
- Never empty the grease/water tray while the unit is hot. The tray and its contents become very hot while the grill is in use.

Pre-Grill Checklist

BEFORE FIRST USE

A quick safety check should be performed before using your appliance for the first time. Please ensure that:

1. All packing materials and tie-downs have been removed from the appliance. (See INDEX: “Unpacking & Assembly” for further details.)
2. You have fuel connected. (See INDEX: “Gas Connections” for further details.)
3. You have electric connected. (See INDEX:“ Electrical Connections – For Appliances Equipped with a Lighting Package” for further details.)
4. A qualified gas technician has performed a leak test on all the fittings that supply fuel to your grill.

BEFORE EACH USE

A quick safety check should be performed before each time you use the grill (for your safety).

1. Clean and inspect the gas hose. If there is evidence of abrasion, wear, cuts, or leaks, do not use the grill. The hose must be replaced prior to using the unit. Replace the hose assembly with the exact type specified by Crown Verity.
2. If you do not smell gas, shut everything off and have a qualified technician service the appliance.
3. Ensure the gas hose is clear of the appliance. Keep the fuel supply hose away from any heated surface(s).
4. Check that the area near the appliance is clear of combustible materials and vapors, including alcohol, gasoline, aerosol containers and dry goods. Keep electrical cords from being in contact with the unit.
5. Do not use the appliance with overly loose-fitting clothing, especially loose sleeves that may come in contact with the hot surfaces.
6. Never grill without the grease/water tray in place. Always ensure that the tray is pushed all the way to the back and that you are keeping water in the tray. Failure to do so can cause a fire.
7. Grease is extremely flammable. Let the grease/water tray cool down before you attempt to handle or dispose of its contents. The grease/water tray should be cleaned of grease on a regular basis.

AT EACH NEW SEASON

A quick safety check should be performed on the appliance if it has not been used for an extended period of time (for your safety).

1. Remove the grates and check the burners, shutters, orifices, and valves for obstructions.
2. Spiders and insects often nest in these areas of the grill and can disrupt air flow, causing damage to the grill and personal injury.
3. Clean and inspect the gas hose. If there is evidence of abrasion, wear, cuts or leaks, do not use the grill. The hose must be replaced prior to using the unit. Replace the hose assembly with the exact type specified by Crown Verity.

Lighting Your Grill

Before lighting your grill, be sure you have followed the instructions in this manual regarding proper setup, placement, gas connections leak testing and safe operation, all of which precede this page.

WARNING: BEFORE LIGHTING YOUR GRILL

- Do not use the grill if the odor of gas is present at any time. Follow leak testing procedures before using the unit.
- Always keep the lid open when lighting your grill.
- Releasing fuel into a closed grill before lighting will increase the risk of explosion, property damage, personal injury or death.
- Keep your face and body as far from the grill as possible when lighting. Any time a burner doesn't light within 5 seconds, turn off the control, wait 5 minutes for gas to dissipate, and repeat the lighting procedure.
- NEVER LEAVE THE GRILL UNATTENDED WHILE THE GRILL IS LIT.

STANDARD LIGHTING PROCEDURE

- Open roll dome so gas will not build up within the unit before lighting.
- Make sure the main burner valves are in the OFF position (See "Figures 11 and 12").
- Turn the main gas supply on and wait 15 seconds.
- For appliances equipped with a lighting package: Turn the pilot valve into the on position.

Press down and hold the piezo ignition button (See “Figure 11”) to engage the electronic ignition and light the pilot tube. Confirm that the pilot is lit by looking down through the cooking grates. You will be able to feel heat coming up to the cooking surface also. (Do Not touch the cooking grate while feeling for heat as the surface could cause burns)

- For appliances not equipped with a lighting package: Turn the pilot valve into the on position. Press down and hold the electronic ignition button (See “Figure 12”) to engage the electronic ignition and light the pilot tube. Confirm that the pilot is lit by looking down through the cooking grates. You will be able to feel heat coming up to the cooking surface also. (Do Not touch the cooking grate while feeling for heat as the surface could cause burns)
- Once the pilot is lit, turn the main burner valves on to the desired temperature setting. (See INDEX: “General Operating Procedures” for guidelines on how to determine ideal temperature settings). Ignition should take place within 2 to 3 seconds. Verify that the burners are lit by looking through the grates. If the burners do not light within this time, turn knobs to the OFF position (See “Figures 11 and 12”) and wait 5 minutes for the gas to dissipate before trying again. If the appliance will not light after multiple attempts, refer to the troubleshooting section of this manual.

FIGURE 11A. VALVE POSITIONS GRILLS WITH LIGHT PACKAGE

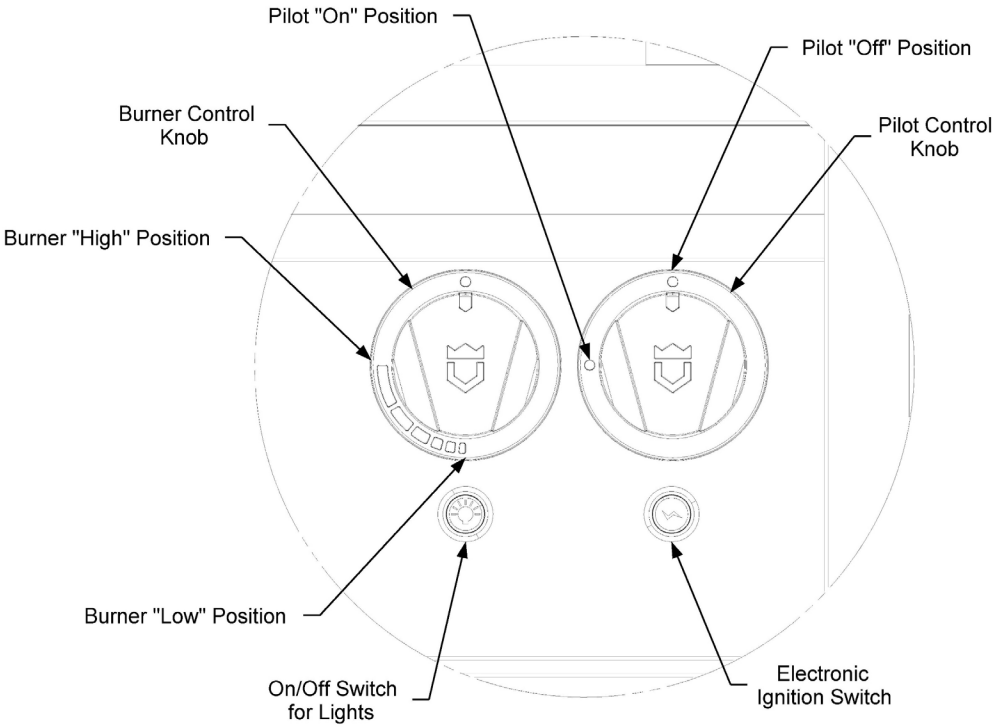

FIGURE 11B. VALVE POSITIONS SIDE BURNER WITH LIGHT

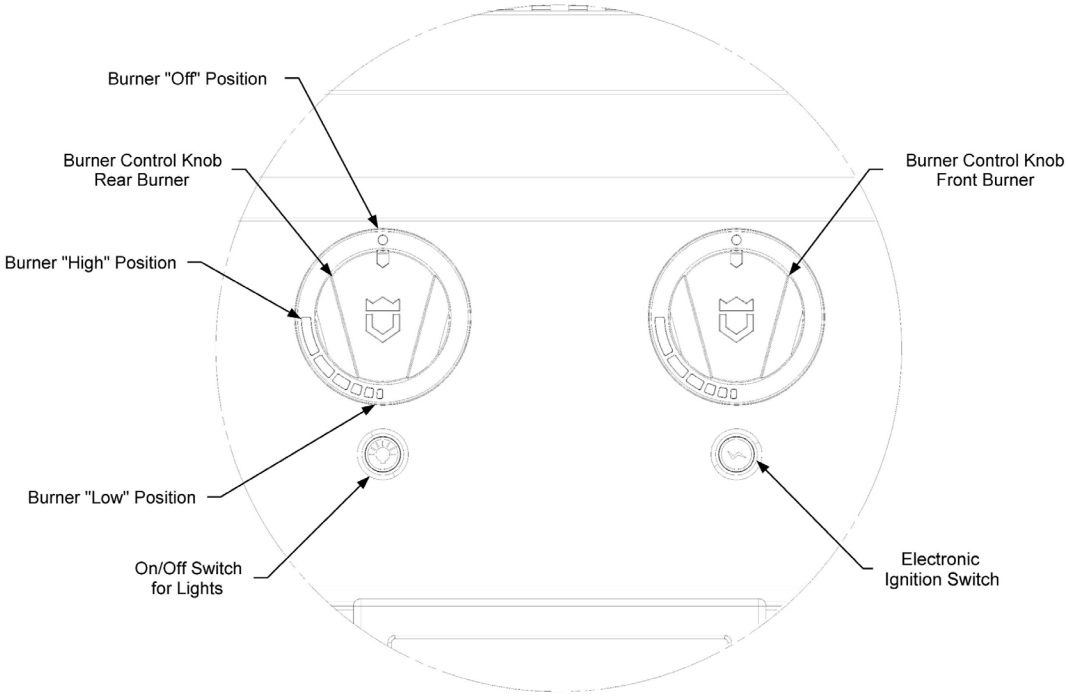

FIGURE 12A. VALVE POSITIONS GRILLS WITHOUT LIGHT PACKAGE

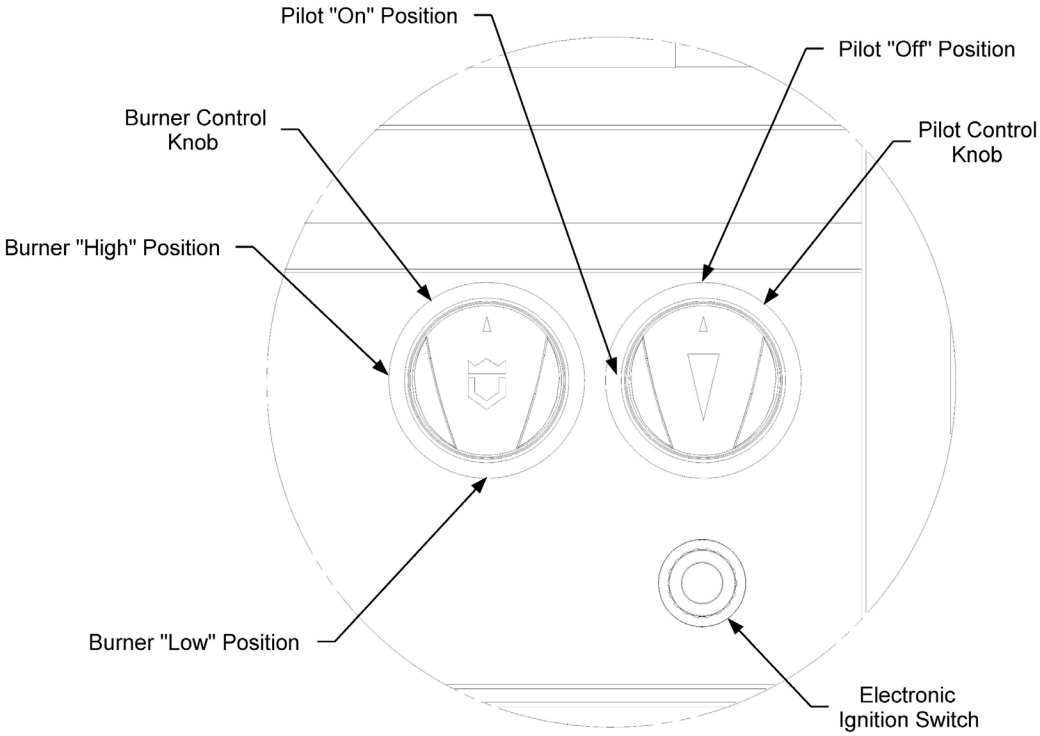

FIGURE 12B. VALVE POSITIONS SIDE BURNER WITHOUT LIGHT PACKAGE

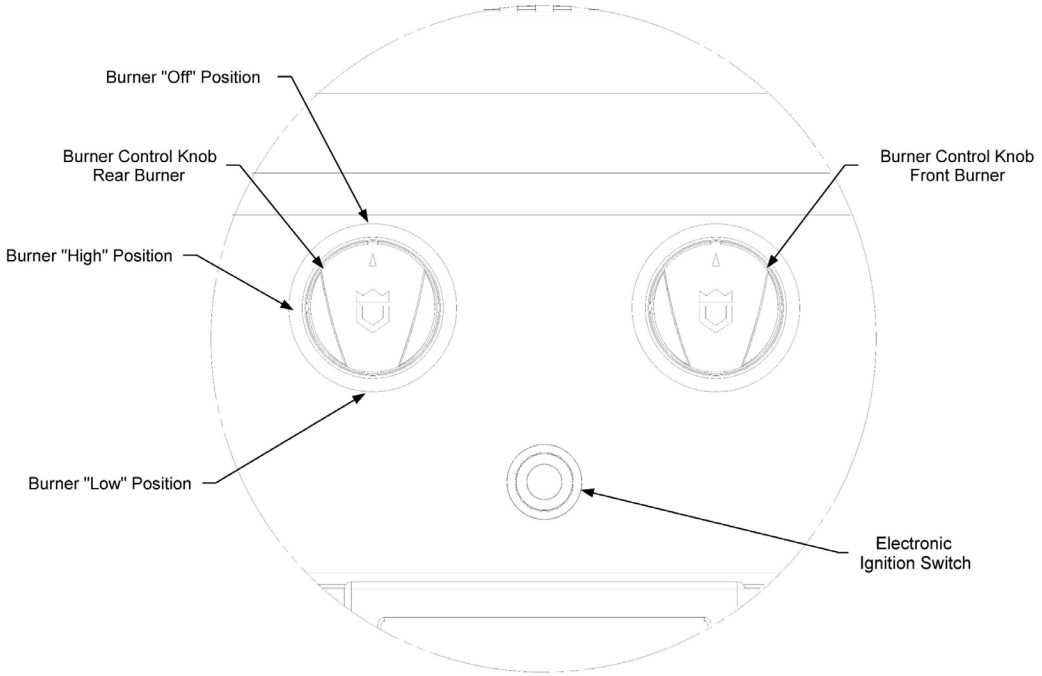

MANUAL LIGHTING PROCEDURE:

- Open the grill roll dome.
- Make sure the main burner valve is the OFF position (See “Figures 11 and 12”).
- Turn the main gas supply on and wait 15 seconds.
- Turn the pilot valve to the on position.
- Insert a barbeque lighter into the hole located behind the wing door on the face of the grill (See “Figure 13”).
- Visually inspect to see that the pilot tube is lit.
- Turn the main burner valves on to the desired temperature setting (See INDEX: “General Operating Procedures” for guidelines on how to determine ideal temperature settings). Ignition should take place within 2 to 3 seconds. Verify that the burners are lit by looking through the grates on the cooking surface (See “Figure 14”). If the burners do not light within this time, turn the temperature knob to the OFF position and wait 5 minutes for the gas to dissipate before trying again. If the unit will not light after multiple attempts, refer to the troubleshooting section of this manual.

FIGURE 13. MANUAL LIGHTING

The manual lighting port is located on the left hand side of the grill. Swing the Wing Door to the left to expose the end of the pilot tube. Place the end of the barbecue lighter supplied with your appliance into the hole. (See INDEX: "Lighting You Grill" for further details.)

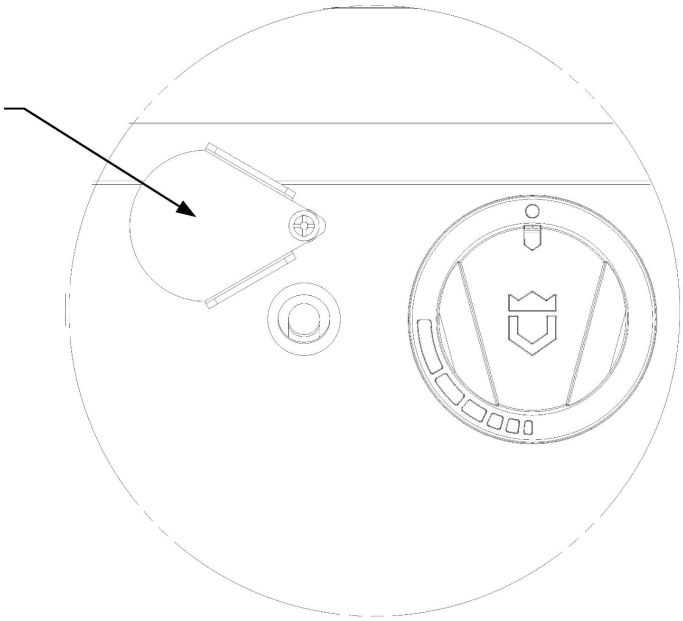

FIGURE 14. BURNER

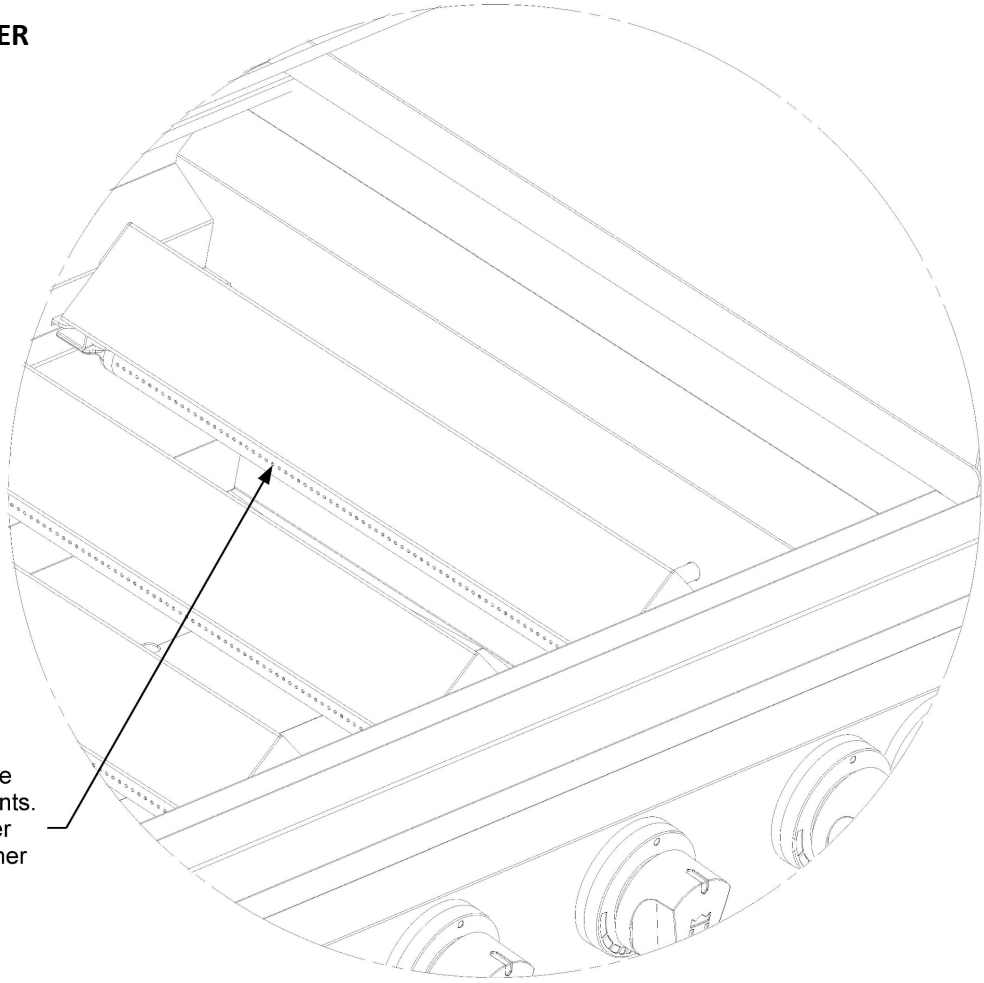

The burner tubes are visible under the radiants. (See INDEX: "Burner Adjustments" for further details).

Grilling in Windy Conditions

For outdoor grills to sear and grill steaks they have high performance burners that require constant, steady supply of fresh air to mix with the fuel. Your Crown Verity grill pulls air in through the front of the grill. Using your grill in windy conditions can disrupt the front to back air flow (See “Figure 15”). If, while grilling with all burners on high and the lid closed, you notice that the temperature gauge fails to rise, be cautious. If wind has kept hot gases from exiting the rear of the grill the control panel and knobs may have become extremely hot.

To prevent the possibility of improper heat buildup caused by windy conditions:

- Do not leave the hood down when the burners are on high if the grill is unattended.
- If you suspect the grill is overheating, using an oven mitt, open the hood. Then adjust the burner control knob to a lower setting.
- Install your grill with a wind break behind it.
- Orient the grill so prevailing winds are not blowing into the rear of the grill.

IMPORTANT: Any damage caused from use in windy conditions, such as melted knobs or ignitor wires, or control panel discoloration from heat buildup, is excluded from warranty

FIGURE 15. WIND DIRECTION

Prevailing winds blowing into the back of the dome can cause damage to the grill.

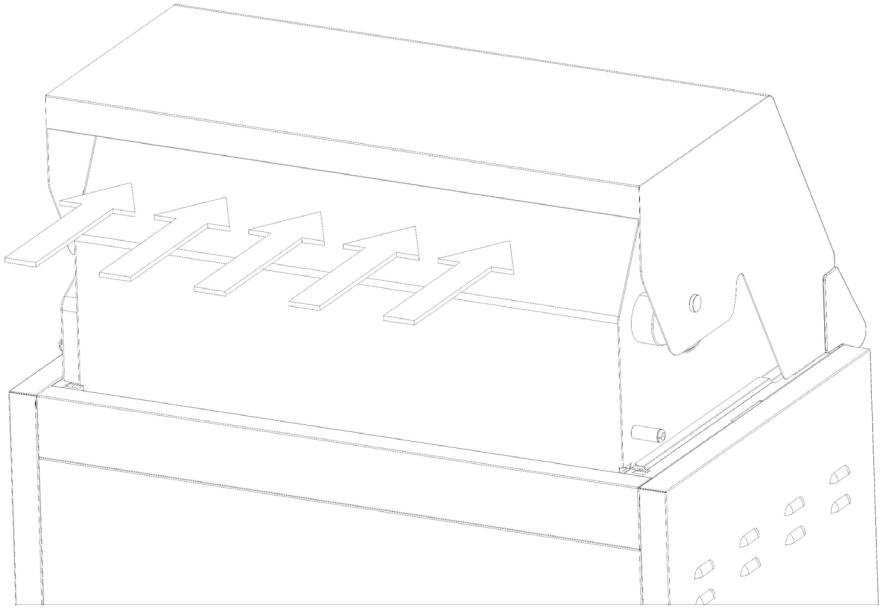

Basic Grilling

WARNING: DO NOT LEAVE THE GRILL UNATTENDED

Do not leave the grill unattended during the pre-heat cycle or at any time while in use. Pre-heating for more than 10-15 minutes may overheat the grill, causing damage to the grill.

PRE-HEATING

Preheating your grill every time you use it is important. Preheat your grill by igniting all main burners and setting them to the highest setting. Then close the hood and allow the grill to heat for 5 to 8 minutes. The hood thermometer should reach approximately 450 degrees. Once you have reached your desired pre-heat temperature, turn off the burners that you will not be using to cook your food. Please note, the surface temperature can be up to 200 degrees higher.

TYPES OF COOKING

Your Crown Verity grill has the capabilities of creating a range of heat intensities. By varying the heat output, the number of burners used and the position of the hood, you can create either direct or indirect heat or a combination of both. There are two basic types of grilling in an outdoor grill, Direct Heat, or Indirect Heat.

Direct Heat: Direct Heat cooking occurs when foods are placed directly over the heat source. This form of heat is known as radiant heat because the heat radiates directly from the source to the food. Direct heat is necessary when you want to sear the outside of your food to lock in the flavor.

Indirect Heat: Indirect Heat cooking occurs when the food is not close to the heat source. Heat reaches the food from air movement within the cooking area. This form of heat is known as convection heat. This type of cooking is achieved by placing the food on one side of the grill and running the burners on the other side. You leave the burners below the food in the OFF position. You should keep the hood closed as much as possible during this type of cooking to maintain even heat distribution around the food. You regulate the heat by adjusting the burner, using the hood thermometer to monitor the temperature.

Burner Adjustments

Every burner is tested and adjusted at the factory for proper performance. If a burner is not operating properly, it may be due to variations in the local gas supply or because of an obstructed air shutter or orifice. Flames should be stable without lifting from the burner. The flames should burn cleanly without creating any sooty residue.

BURNER FLAME CHARACTERISTICS:

- The flame should be mostly blue and stable with only a small amount of orange, if any, at the tips. There should be little noise and no lifting. A muffled "pop" when the burner is turned off is normal.
- The inner cone should be 1/4 inch (6.4 mm) high.
- The outer cone should be 5/8 inch (15.9 mm) high.

Visually inspect the flames in your grill and adjust if necessary, using the instructions below.

IMPORTANT: A sooty flame is usually caused by dirt, debris or spider nests blocking the air shutter or orifice. This is a dangerous condition. The grill should NOT be used until the problem is rectified. If you are not comfortable addressing the issue yourself, please hire a licensed technician or contact Crown Verity Service at 1-888-505-7240.

TO CLEAN THE AIR SHUTTER:

Turn off the gas supply shutoff valve or close the main valve on the LP cylinder. Ensure the grill control knobs are in the OFF position. Be sure that the unit is cool.

Next, remove the grates. They are heavy and care should be taken in removing them, so they do not damage the outer surface of the appliance.

Next, remove the faceplate of the burner box by first removing all of the knobs and then removing the screws holding the face in place (See "Figure 16"). Once the screws are removed, gently lift the face up and forward to remove. If the grill is equipped with a light package, disconnect the wire harness from the individual burner bezels as well as the two switch connections. Place the face down on its back to avoid surface scratches.

FIGURE 16. FACE REMOVAL

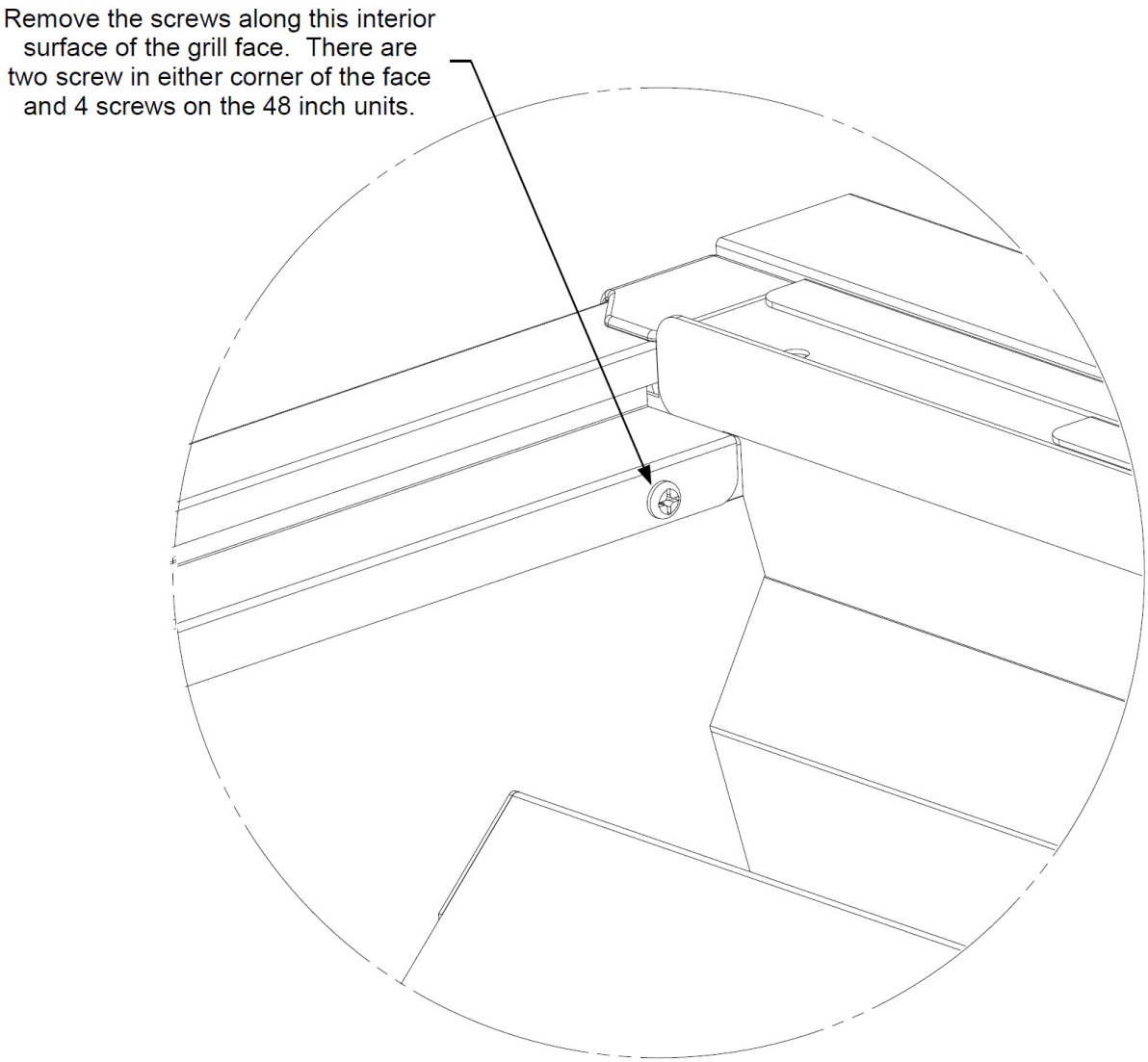

The shutter is located at the end of the burner tubes closest to the gas orifice (See "Figure 18" for further details).

Use a flashlight to view the screened openings of the air shutter from and remove any obvious obstructions from the screen protecting the air shutter.

TO ADJUST THE AIR SHUTTER:

Leave the gas supply shutoff valve in the OFF position or leave the main valve on the LP cylinder in the closed position. The grill control knobs should also remain in the OFF position.

With the roll dome open, remove the pins located at the far end of the burner assemblies. Slide the burner gently to either the right or left to disengage them from the retaining bracket. Once clear, lift the burner up and pull it back and away from the back side of the gas valve (See "Figure 17" for further details).

FIGURE 17. BURNER ASSEMBLY DETAILS

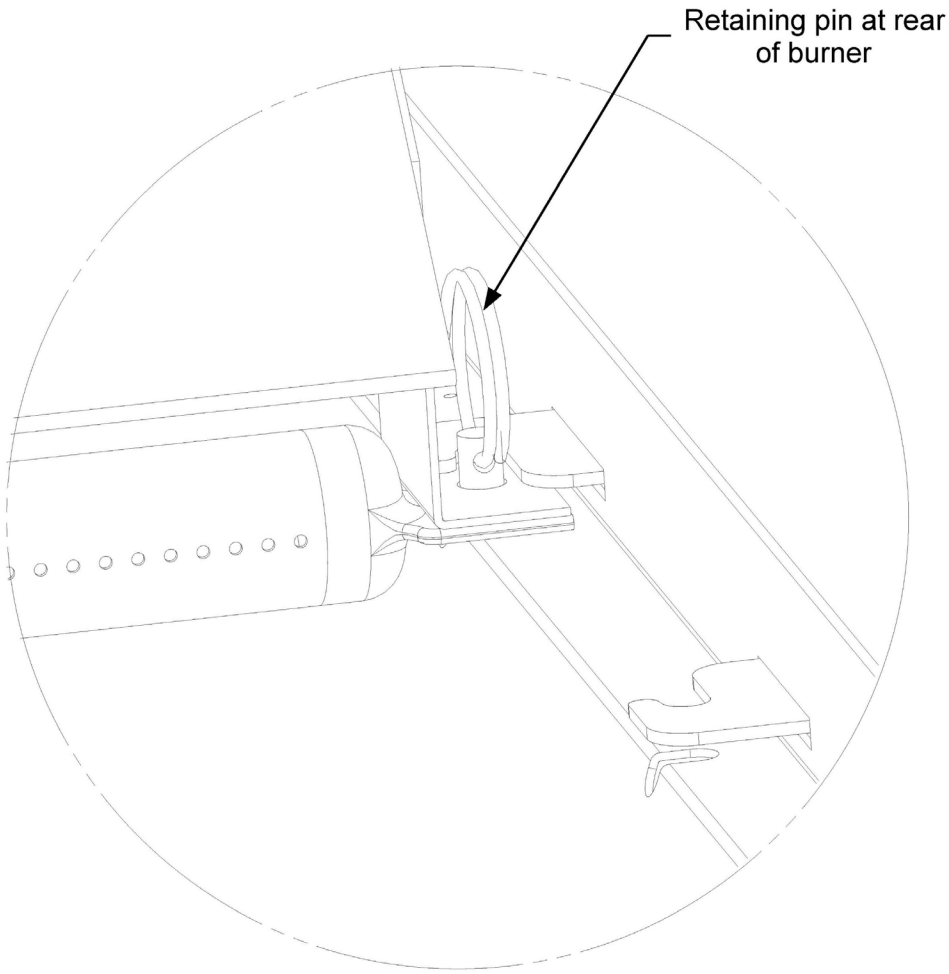

Using a screwdriver, loosen the shutter adjustment lock screw (See "Figure 19"). Be careful not to remove the lock screw. Once loose, you can rotate the air shutter to adjust the amount of air entering the venturi. Replace the burners into the appliance to adjust the air shutters.

IMPORTANT: Use caution when handling the burner tubes as they can get very hot. The radiant surface can also get very hot and can cause severe burns. Use caution when handling components and use protective gloves.

IMPORTANT: Always ensure that the brass orifices are inserted into the holes in the ends of the air shutters and centered (See “Figure 18” for further details).

FIGURE 18. ORIFICE ACCESS AND ALIGNMENT

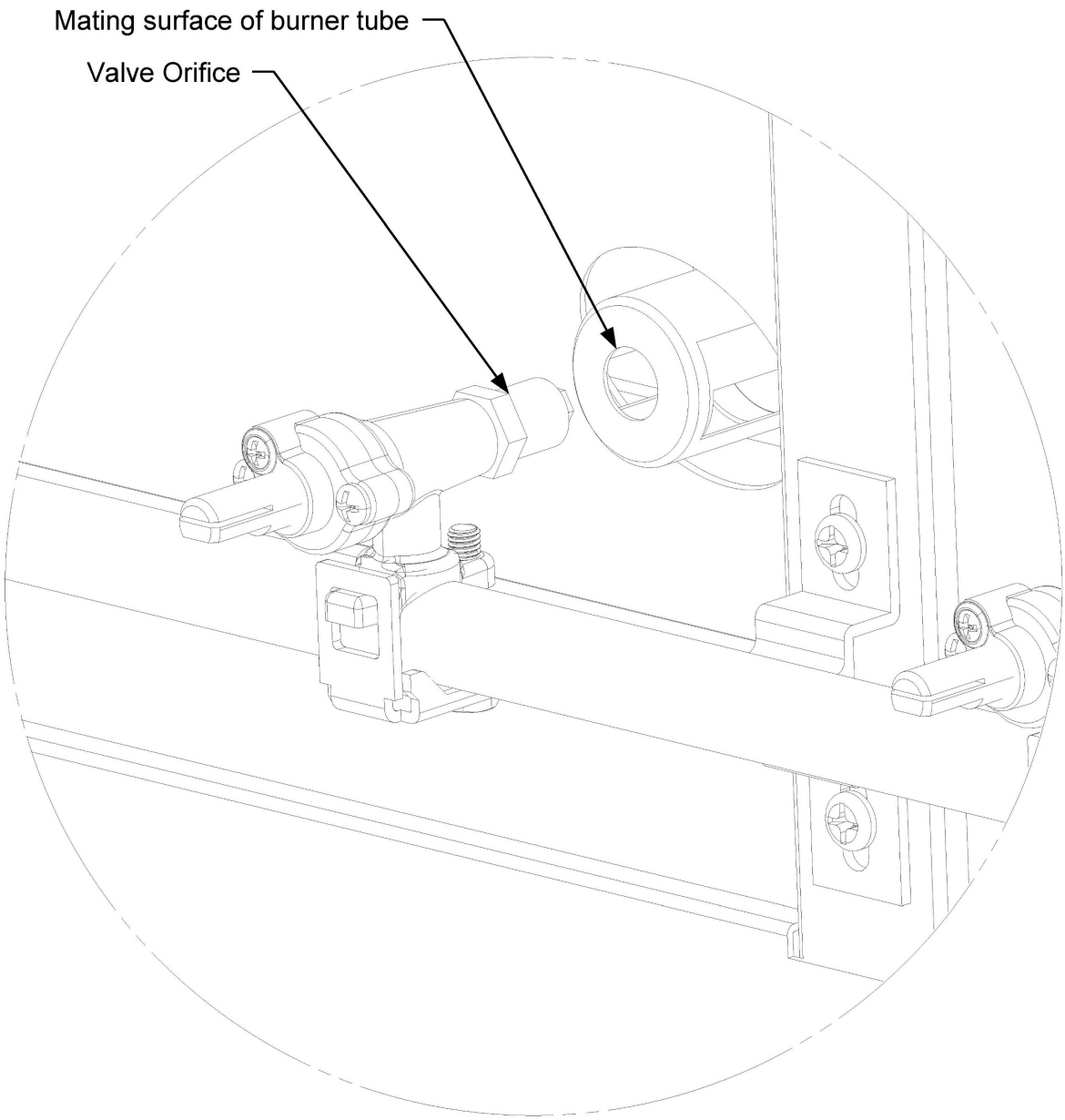

Turn on the gas supply valve or open the main valve on the LP cylinder. Following the lighting instructions (See INDEX:” Lighting Your Grill” for further details), light the burners to be adjusted.

If the flames are mostly yellow or are noisy and lift off the burner ports, rotate the air shutter to progressively reduce the amount of air entering the venturi. Continue to close the air shutter until the flame no longer lifts from the burner. For a sooty flame, progressively open the air shutter until the flame burns cleanly.

FIGURE 19. SHUTTER ADJUSTMENT

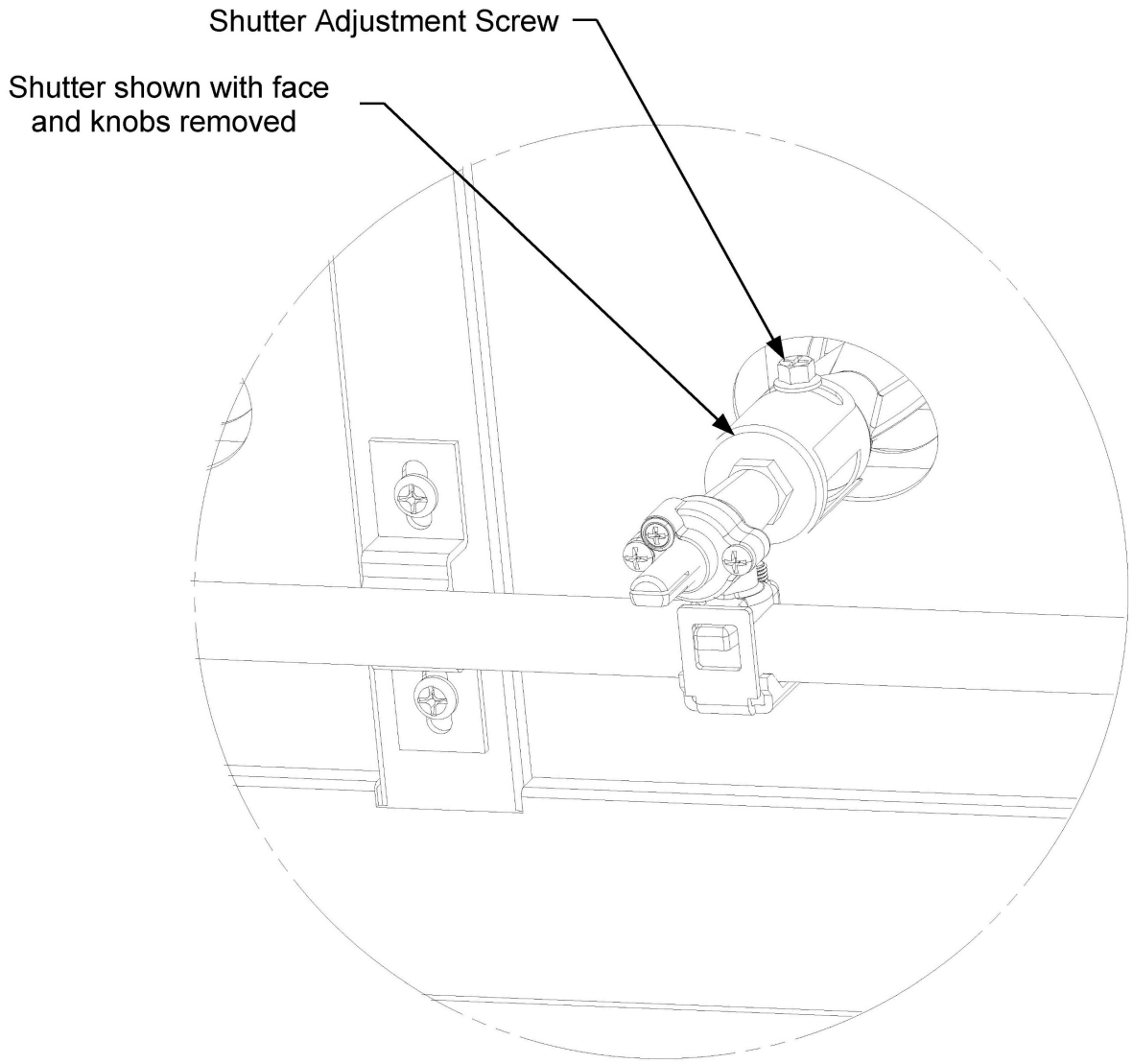

Once adjusted to a stable flame that burns cleanly and does not lift, turn the grill control knob to the OFF position. Tighten the lock screw. Re-light and confirm the adjustment is good. Once confirmed, replace the radiant and burner tube, place the pin back into hole at the back of the burner tube to secure the radiant and burner tube in place, then replace the faceplate. For appliances equipped with the lighting option, ensure that all connections are made to the switches and bezels.

Caring for Your Grill

STAINLESS STEEL CARE:

The Crown Verity Grills is built from 304 stainless steel, which is a high-quality, non-magnetic stainless steel that is very corrosion resistant. It is also a highly sanitary surface. The stainless steel components of your grill are warranted for life against structural deterioration or failure (See INDEX: "Commercial and Residential Warranty" for further details). With proper care, your grill should last a lifetime. The stainless steel will discolor from the intense heat over time; this condition is normal.

Always clean your stainless steel grill with a mild, food-safe, organic degreaser, followed by a stainless steel polish. **ALWAYS SCRUB WITH THE GRAIN, NEVER ACROSS.** Remove all cleaner residue before lighting the grill in order avoid a build-up of film from the cleaner.

SALT WATER ENVIRONMENTS: 304 Stainless steel is corrosion resistant but is not impervious to rust in salt-water environments. Exposure to salt air and sea spray will eventually damage the appliance if not cared for properly. The best thing you can do to protect it is to clean it frequently. Don't give the salt time to establish the chemical reaction that contributes to rust. In salt air environments, we recommend cleaning all stainless steel surfaces at least every two weeks to keep your grill in prime condition. When not in use, we recommend that you keep the cover on the appliance.

POOLS AND CHLORINE: chlorine in the air from pools can also damage 304 Stainless steel over time. Again, the best thing you can do to protect it is to clean it frequently. We recommend cleaning all stainless steel surfaces at least every two weeks to keep your grill in prime condition. When not in use, we recommend that you keep the cover on the appliance.

COOKING GRATE CARE:

Clean the cooking grates with a long-handled brass brush, or wooden paddle. It is best to do this while the cooking grates are warm to hot.

- Wear long, insulated gloves and use caution when doing so.
- Never drop the cooking grates, as the welds along the rungs can crack.

BURNER CARE:

The burners should be visually inspected once a year. To access the burners, first make sure the grill is completely cooled. Ensure the control valves are in the OFF position and turn off the main gas supply. Open the roll dome or remove completely. Carefully remove the cooking grates as they are heavy. The radiants and burners are now exposed. Visually inspect the burners to confirm they are structurally sound. You have the option of removing the radiant to gain better visual access if desired (See "Figure 17" for further details).

It is unlikely the burners in your grill will become dirty. However, they may be cleaned using a brass brush if necessary. Gently brush off any debris, being careful not to dislodge the burners. Clogged burner ports may be opened up with a straightened paper clip. Do not use a toothpick or anything else that could break off inside the burner ports. To remove the burners for cleaning, remove the burner pin and swing the radiant and burner to either side of the retaining bracket to lift and remove the burner (See "Figure 17" for further details). After cleaning the burners, you must make sure the venturi opening of the burner is centered over the brass orifice when replacing the burner. Once the burners are in place, reassemble the grill and visually inspect the gas hose before lighting.

ORIFICE CLEANING:

Clogged orifices create a dangerous condition that must be resolved before the grill may be used. If you are not entirely comfortable with the procedure, please use a licensed technician or contact Crown Verity customer service at 1-888-505-7240

The orifices can be accessed once the burners are removed. Remove the brass orifice using a 1/2 inch ratcheting socket wrench (See "Figure 18" for further details).

Shine a flashlight through the orifice to look for any obstructions. Remove obstructions with a needle. Use extreme care not to enlarge the hole. Reinstall and tighten the orifice. Re-install the burner ensuring it is centered on the orifice. Test fire the burners and check for proper flame characteristics.

IGNITER BATTERIES:

For appliances not equipped with a lighting package, the electronic ignition system is battery operated. If you do not hear a rapid and strong clicking sound when you press and hold the operating knob, you may need to change the batteries.

EMPTYING THE GREASE/WATER TRAY:

The grease tray should be cleaned after every use. The tray is equipped with a drain cap that can be removed to drain the water/ grease mixture from the tray.

WARNING: The tray gets extremely hot when the grill is operating. Empty the tray only when the grill is cool. Before using the grill is a good time to empty the tray.

Pull the tray forward so that the drain cap is clear of the front of the appliance. Place a bucket under the cap and slowly remove the drain cap. The water gas mixture in a full tray will flow outward at first so ensure the bucket is positioned to capture the contents. Once emptied, replace the drain cap and remove the tray completely to wipe out any excess grease.

With the grease tray removed, next remove the grease deflector. Pull it out and wipe down any grease that has deposited on the deflector. Once cleaned, place the grease deflector back in place ensuring it is pushed all the way to the back of the fire box. Re-install the grease tray ensuring the drain cap is tightened. Install the grease tray with approximately three inches of the tray exposed and fill the tray with approximately one inch of water. Once filled, push the tray into place ensuring that it is positioned all the way to the stop at the back of the fire box.

Troubleshooting

The troubleshooting tips here are for general information only. The information may save you the trouble of a service call. If your grill requires service, contact Crown Verity customer service at 1-888-505-7240.

GRILL WON'T LIGHT:

The grill/side burners are equipped with an electronic ignition system. To check if the system is working try the following:

- Do you hear a rapid clicking noise when you press and hold the electronic ignition button? If there is no clicking, or the clicking is slow or faint, replace the ignition batteries (See INDEX: "Caring for Your Grill" for further details).
- For appliances equipped with a light package, if there is not a rapid clicking noise try turning on the lights to ensure that the grill is connected to power.
- If you do hear rapid clicking, but the grill won't light with the electronic ignition, try manually lighting the grill (See INDEX: "Lighting Your Grill" for further details). If the unit does not light manually, there may not be any gas getting to the burners. Turn the grill control knobs to the OFF position. Confirm that the grill is connected to the gas supply, that the main gas supply is on, or that the LP cylinder is not empty.

SMELL OF GAS WHILE COOKING:

IF YOU SMELL GAS WHILE THE GRILL IS OPERATING, IMMEDIATELY TURN OFF ALL BURNERS AND SHUT OFF THE MAIN FUEL SUPPLY.

- Perform a leak test (See INDEX: "Leal Test Procedure" for further details).
- Check for blockages (See INDEX: "Caring for Your Grill" for further details).

GRILL WON'T GET TO TEMPERATURE:

If the unit does not get to operating temperature within 30 minutes of starting, the burners may not be getting sufficient gas flow.

- If possible, re-orient the oven to ensure that excessive wind is not affecting performance.
- Leaving the burner valve open before opening the cylinder valve may cause the flow control device to activate. Close all valves and follow the lighting procedures (See INDEX: "Lighting Your Grill" for further details)..
- LP cylinder does not have enough gas to deliver proper pressure. Change the tank if necessary. In some situations, in cold ambient temperatures, an LP cylinder will ice up, creating a drop in pressure. If this happens, turn off the tank and let it warm up before trying again. A full tank is less likely to ice up than a tank that is less than half full.
- Check that the Main gas supply is fully on and not partially opened.
- Have the line pressure checked by a qualified technician (See INDEX: "Gas Connections" for further details.)
- Orifices are clear and not clogged. A clogged orifice creates a dangerous situation. Do not use the grill until the issue has been resolved (See INDEX: "Caring for Your Grill" for further details).

THE GRILL IS PRODUCING A LOT OF SMOKE:

This is typically caused by something oily getting onto the cooking grates. If this happens, the only thing you can do is to try and burn it off. Use caution when doing this as the grill will get extremely hot very fast, so never leave it unattended when trying to burn off any oily substances. Burnt cheese or other solids can be scraped or brushed off the cooking grates.

THE LIGHTS WON'T ILLUMINATE:

If the grill/side burner were purchased with an optional light package and the lights won't illuminate, try the following:

- Ensure that the appliance is connected to a live AC power source.
- Check the 12 volt harness connection to the power supply.
- If the switches are not illuminated, remove the face, and check the switch connections (See INDEX: "Burner Adjustments" Figure 16, for further details).
- If the switches are illuminated but the burner knobs are not, remove the face and check the harness connections to the LED bezels (See INDEX: "Burner Adjustments" Figure 16, for further details).
- For dome lights, replace the bulb. The replacement bulbs are halogen, 12 volt, 10W, T3 Type with a G4 bi-pin. They are readily available at most home improvement stores. Avoid touching the glass on the new bulb as it may shorten their life. Pull the old bulb out without twisting and replace holding the new bulb with a paper towel or cloth to hold the bulb.

Contacting Crown Verity Customer Care

Before calling Crown Verity Customer Care, please make sure you have the following information:

- Model Number
- Date of purchase
- Proof of purchase by original owner
- Serial number

For warranty service, contact Crown Verity Service Department for an authorized service agent near you at: **(888) 505-7240 or** **service@.crownverity.com**

Contact Crown Verity for replacement parts. Parts are shipped F.O.B Brantford, ON or Bowling Green, KY.

Installation Checklist

Installer should initial next to each item:

- ☐ Specified clearances maintained.
- ☐ Initial assembly completed — all tape and internal packaging removed.
- ☐ Grease/water tray installed.
- ☐ Burner knobs installed.
- ☐ Cooking grates installed.
- ☐ Igniter starts pilot tubes when button is depressed.
- ☐ For appliance equipped with a light package, the lights turn on.
- ☐ Pilot and Burner Tubes light.
- ☐ Gas pressures have been set in accordance with the rating plate on the grill.
- ☐ Manual shutoff valve is installed and accessible.
- ☐ Owner informed of shutoff valve location.
- ☐ Unit and supply connections have been tested and are free of leaks.
- ☐ Leave this Manual with the owner.

Please ensure the installer completes the checklist, explaining each item to you. The installer should initial each item above and sign below.

Installer Signature _____ Date _____

Commercial & Residential Warranty

RESIDENTIAL LIMITED WARRANTY TERMS & CONDITIONS

This warranty is limited to products manufactured by Crown Verity Inc., to the original purchaser, commencing on the date of purchase and is valid only with a proof of purchase. This warranty page and its coverage only applies to Infinite SeriesTM, Estate SeriesTM and PRO SeriesTM grills. The warranty covers defects in material and workmanship under normal use, providing that:

1. The equipment is properly installed per Crown Verity's Operator's Manual and by a qualified professional installer, including all start-up checks.
2. The equipment has not been accidently or intentionally damaged, altered, or misused.
3. The serial number rating plate affixed to the equipment has not been intentionally defaced or removed.
4. The equipment is used in a residential application as defined by ANSI Z21.58/CSA 1.6 current versions.

To activate the Crown Verity warranty please visit our warranty registration page https://crownveritycanada.ca/support#faqs This warranty is limited to the original purchaserand cannot be transferred.

WARRANTY COVERAGE

LIMITED WARRANTY

Crown Verity will warrant replacement parts for Canada and the Continental United States for thefollowing period:

Limited Lifetime Warranty: The stainless-steel grill body, stainless steel gas burners and cooking grates are warranted to be free from defects in material and workmanship when subjected to normal domestic use and maintenance for the lifetime of the original purchaser. This warranty excludes surface corrosion,scratches, and discoloration which may occur during normal use. Failure to perform required maintenance will void this warranty.

Limited Six-Year Warranty: The Radiants, Manifolds and Gas valves are warranted to be free from defects in material and workmanship when subjected to normal domestic use and maintenance for six (6) years from theoriginal date of purchase. Failure to perform required maintenance will void this warranty.

Limited One-Year Warranty: For a period of one (1) year from the original date of purchase, Crown Verity will replace, or repairparts found to be defective at no cost to the original purchaser. This includes the cost of shipping replacement parts and, where necessary, service labor at prevailing local rates by a Crown Verityauthorized service person. Service will be provided during normal business hours and must be authorized in advance by Crown Verity.

All non-grill components, such as modular and built-in cabinetry, fall under the Limited One Year Warranty.

WARRANTY LIMITATIONS

The Crown Verity warranty does not apply to damages caused by:

- Negligence.
- Installation or start-up, damages or problems caused by improper installation or use.
- Unauthorized repair by anyone other than a Factory Authorized Service Agent.
- Erratic voltages or gas supply.
- Air and Gas adjustment.
- Damage caused by nature.
- Ordinary wear and tear.
- Display models are sold “as is”. If you have purchased a display model, please be advised that it is sold “as is” and that it is subject to the following warranty exclusions: any exterior or cosmetic damage is non-warrantable; any missing components will be replaced at consumer’s expense; major handling damage to manifold, valve and ignition system will be serviced at consumer’s expense; all other warranties will remain in effect.
- The equipment is properly installed per Crown Verity’s Operator’s Manual and by a qualified professional installer, including all start-up checks.
- The cost of a service call to diagnose complaint.
- Modification to Crown Verity product will void related warranties.

WARRANTY EXCLUSIONS

The Crown Verity warranty does not apply to labor or repairs required for:

- Batteries, fuses, and other wearable items
- Door adjustments and or lid adjustments
- Tightening of screws or fasteners
- Damage in shipment
- Adjustments and cleaning of main burners pilot burners or orifices
- Accessories such as brushes, spatulas, and cylinders
- Normal discoloration of materials
- Units used in a commercial application. Refer to our Commercial Warranty.

COMMERCIAL LIMITED WARRANTY TERMS & CONDITIONS

This warranty is limited to products manufactured by Crown Verity Inc., to the original purchaser, commencing on the date of purchase and is valid only with a proof of purchase. The warranty coversdefects in material and workmanship under normal use, providing that:

1. The equipment is properly installed per Crown Verity's Operator's Manual and by a qualified professional installer, including all start-up checks.
2. The equipment has not been accidently or intentionally damaged, altered, or misused.
3. The serial number rating plate affixed to the equipment has not been intentionally defaced or removed.
4. The equipment is used in a commercial application as defined by ANSI Z83.11/CSA 1.8.

To activate the Crown Verity warranty please visit our warranty registration page https://crownverity.ca/support#faqs. This warranty is limited to the original purchaser and cannot be transferred.

WARRANTY COVERAGE

LIMITED WARRANTY

Crown Verity will warrant replacement parts for Canada and the Continental United States for thefollowing period:

Limited Lifetime* Warranty: The stainless-steel grill body and cooking grates are warranted to be free from defects in material andworkmanship when subjected to normal domestic use and maintenance for the lifetime of the original purchaser. This warranty excludes surface

corrosion, scratches, and discoloration which may occur during normal use. Failure to perform required maintenance will void this warranty.
* Applies to all grills sold after January 1, 2015 or with a serial number higher than 21010.

Limited Ten-Year Warranty: The stainless steel gas burners are warranted to be free from defects in material and workmanship when subjected to normal domestic use and maintenance for ten (10) years from the original date ofpurchase. Failure to perform required maintenance will void this warranty.

Limited One-Year Warranty: For a period of one (1) year from the original date of purchase, Crown Verity will replace, or repair parts found to be defective at no cost to the original purchaser. This includes the cost of shipping replacement parts and, where necessary, service labor at prevailing local rates by a Crown Verity authorized service person. Service will be provided during normal business hours and must be authorized in advance by Crown Verity. The limited one-year warranty covers Crown Verity Grills, Griddles,Fryers, Steamers, Sinks & Pizza Ovens.

WARRANTY LIMITATIONS

The Crown Verity warranty does not apply to damages caused by:

- Negligence.
- Installation or start-up, damages or problems caused by improper installation or use.
- Unauthorized repair by anyone other than a Factory Authorized Service Agent.
- Erratic voltages or gas supply.
- Air and Gas adjustment.
- Damage caused by nature.
- Ordinary wear and tear.
- Display models are sold “as is”. If you have purchased a display model, please be advised that it is sold “as is” and that it is subject to the following warranty exclusions: any exterior orcosmetic damage is non-warrantable; any missing components will be replaced at consumer’s expense; major handling damage to manifold, valve and ignition system will be serviced at consumer’s expense; all other warranties will remain in effect.
- The equipment is properly installed per Crown Verity’s Operator’s Manual and by a qualifiedprofessional installer, including all start-up checks.
- The cost of a service call to diagnose complaint.
- Modification to Crown Verity product will void related warranties.

WARRANTY EXCLUSIONS

The Crown Verity warranty does not apply to labor or repairs required for:

- Batteries, fuses, and other wearable items
- Door adjustments and or lid adjustments
- Tightening of screws or fasteners
- Damage in shipment
- Adjustments and cleaning of main burners pilot burners or orifices
- Accessories such as brushes, spatulas, and cylinders
- Normal discoloration of materials

Appendix "A"

GRILL RATING PLATE

MANUFACTURED BY/FABRIQUE PAR

CROWN VERITY INC.
37 ADAMS BLVD
BRANTFORD, ON, CANADA N3S 7V8
www.crownverity.com

CONFORMS TO ANSI STANDARD Z83.11 2016 / CSA 1.8 2016
CONFORMS TO ANSI STANDARD Z21.58 2018 / CSA 1.6 2018

SERIAL #: IC000001

MODEL# IGM 24 ■ 30 ■ 36 ■ 42 ■ 48 ■ 482RD ■

IE 30 ■ 36 ■ 42 ■ 36I ■

GAS TYPE: PROPANE (LP) ■ NATURAL GAS (NG) ■

ORIFICES – MAIN BURNER	#58 LP	#51 NG
ORIFICES - PILOT	#70 LP	#57 NG
MANIFOLD PRESSURE	11.0" W.C. LP	4.0" W.C. NG

INPUT:	MAIN BURNERS EACH	14,750 BTUH
INPUT:	PILOTS EACH	5,500 BTUH

MANIFOLD PRESSURES ARE MEASURED AT THE FIRST BURNER ORIFICE. REMOVE THE BURNER RADIANT AND TUBE AND ATTACH A MANOMETER DIRECTLY TO THE ORIFICE.

VOLTS	100-240Vac
AMPS	1.0A
FREQ	50/60Hz

CLEARANCES DEGAGEMENTS MINIMAL.

SIDES 12 INCHES COTES - 12 PO.
REAR 18 INCHES L' ARRI ERE - 18 PO.

•FOR OUTDOOR USE ONLY. IF STORED INDOORS, DETACH & LEAVE CYLINDER OUTDOORS.

•DISCONNECT LP CYLINDERS OR NATURAL GAS SUPPLY WHEN NOT IN USE.

•CAUTION: USE ONLY GAS REGULATOR SUPPLIED WITH APPLIANCE. THIS REGULATOR IS SET FOR AN OUTLET PRESSURE OF 4.0 (NG) OR 11 (LP) INCHES WATER COLUMN.

•DO NOT USE THIS APPLIANCE UNDER OVERHEAD UNPROTECTED COMBUSTIBLE SURFACES.

•FOR USE IN NON-COMBUSTIBLE LOCATIONS ONLY, KEEP THE AREA AROUND THIS APPLIANCE CLEAR OF LEAVES, GRASS AND OTHER COMBUSTIBLE MATERIALS.

•DO NOT STORE A SPARE LP GAS CYLINDER UNDER OR NEAR THIS APPLIANCE.

•NEVER FILL THE CYLINDER BEYOND 80 PERCENT FULL.

WARNING: IMPROPER INSTALLATION ADJUSTMENT, ALTERATION, SERVICE OR MAINTENANCE CAN CAUSE PROPERTY DAMAGE, INJURY OR DEATH. READ THE INSTALLATION OPERATING AND MAINTENANCE INSTRUCTIONS THOROUGHLY BEFORE INSTALLATION OR SERVICING THIS EQUIPMENT.

WARNING: ELECTRICAL GROUNDING INSTRUCTIONS

A) USE ONLY WITH A GFI PROTECTED CIRCUIT
B) USE ONLY EXTENSION CORDS APPROVED FOR OUTDOOR USE MARKED WITH A W-A, AND RATED FOR THE POWER OF THIS APPLIANCE

MADE IN CANADA FABRIQUE AU CANADA

•POUR USAGE A L'EXTERIEUR SEULEMENT. SI ENTREPOSE A L'INTER-IEUR, D'ETACHER LES BOUTEILLES ET LES LAISSER A L'EXTERIEUR.

•L'ALIMENTATION EN GAZ DOIT ETRE COUPEE A LA BOUTEILLE D'ALIMENTATION EN GAZ LORSQUE CET APPAREIL N'EST PAS UTILISE.

•MISE EN GARDE: UTILISEZ SEULEMENT LE REGULATEUR FOURNIS AVEC L'APPAREIL. CE REGULATEUR EST REGLE POUR UNE PRESSION DE SORTIE DE 4.0 (NG) OU 11 (PL) PO COLONNE D'EAU.

• NE PAS UTILISER CET APPAREIL SOUS DES SURFACES COMBUSTILES NON PROTEGEES.

•DOIT ETRE UTILISE SEULEMENT DANS DES LOCAUX NON INFLAMMABLES. GARDER A DISTANCE L'HERBE, FEUILLES ET AUTRE MATERIAUX COMBUSTIBLES.

•NE RANGEZ PAS UNE BOUTEILLE DE GAZ PROPANE DE RECHANGE SOUS OU PRÈS DE CET APPAREIL

•NE JAMAIS REMPLIR PAS LE CYLINDRE AU-DELÀ DE 80 POUR CENT

AVERTISSEMENT: UNE INSTALLATION, UN ADJUSTEMENT. UNE ALTERATION, UN SERVICE OU UN ENTRETIEN NON CONFORME AUX NORMES PEUT CAUSER DES DOMMAGES A LA PROPRIETE, DES BLESSURES OU LA MORT. LISEZ ATTENTIUEMENT LES DIRECTIVES D'INSTALLA-TION, D'OPERATION ET D'ENTRETIEN AVANT DE FAIRE L'INSTALLATION OU L'ENTRETIEN DE CET EQUIPEMENT.

AVERTISSEMENT: INSTRUCTIONS DE MISE À LA TERRE ÉLECTRIQUE

A) UTILISER UNIQUEMENT AVEC UN CIRCUIT PROTÉGÉ DDFT
B) N'UTILISEZ QUE DES RALLONGES APPROUVÉES POUR UNE UTILISATION EXTÉRIEURE MARQUÉES D'UN W-A ET DONT LA PUISSANCE DE CET APPAREIL

LIGHTING AND OPERATING INSTRUCTIONS

- OPEN ALL LIDS WHILE LIGHTING
- TURN OFF ALL BURNERS AND PILOT VALVES.
- TURN OFF GAS SUPPLY (LP CYLINDER VALVE).
- OPEN GAS VALVE, WAIT 15 SECONDS.
- TURN PILOT VALVE TO ON POSITION AND IGNITE.
- OPEN AND ADJUST MAIN BURNER VALVE AS DESIRED.

IF IGNITION DOES NOT TAKE PLACE, TURN OF ALL VALVES, WAIT 5 MINUTES AND REPEAT.

SHUT DOWN: TURN ALL BURNERS AND PILOT VALVES TO THE OFF POSITION. TURN OFF AND DISCONNECT CONNECT GAS SUPPLY. DISCONNECT LP SUPPLY CYLINDERS WHEN NOT IN USE.

CLEAN THE APPLIANCE REGULARLY, ADD WATER TO THE GREASE TRAYS AND FOLLOW THE OPERATIONS MANUAL.

MISE EN MARCHE ET OPERATION

- SOULEVEZ TOUS COUVERCLES PENDANT L'ALLUMAGE
- FERMEZ TOUS SOUPAPES DE BRÛLEUR ET DE PILOTE.
- FERMEZ L'ALIMENTATION EN GAZ. (SOUPAPE DE CYLINDRE LP.)
- OUVREZ L'ALIMENTATION EN GAZ. ATTENDRE 15 SEC.
- METTRE LE(S) PILOTE(S) A ON ET ALLUMER.
- OUVREZ LES SOUPAPES DE BRÛLEUR COMME DESIRÉ

SI L'APPAREIL NE S'ALLUME PAS, FERMEZ TOUS SOUPAPES, ATTENDRE 5 MIN. ET REPETER.

FERMETURE: METTRE TOUS SOUPAPES DE BRÛLEUR ET DE PILOTE A OFF. FERMEZ ET DEBRANCHER L'ALIMENTATION EN GAZ. DEBRANCHER LE(S) CYLINDRE(S) LP. LORSQUE L'APPAREIL N'EST PAS UTILISÉ.

NETTOYER LA GRILLE REGULIEREMENT PUIS SUIVRE LA MANUEL D'OPERATION.

GAS-FIRED
c UL us
LISTED
MH64834
Outdoor Cooking Gas Appliance

Appendix "A" Cont'd

BUILT-IN RATING PLATE

MANUFACTURED BY/FABRIQUE PAR

CROWN VERITY INC.
37 ADAMS BLVD
BRANTFORD, ON, CANADA N3S 7V8
www.crownverity.com

CONFORMS TO ANSI STANDARD Z83.11 2016 / CSA 1.8 2016
CONFORMS TO ANSI STANDARD Z21.58 2018 / CSA 1.6 2018

SERIAL #: IB000001

MODEL# IBI 24 ■ 30 ■ 36 ■ 42 ■ 48 ■ 482RD ■

GAS TYPE: PROPANE (LP) ■ NATURAL GAS (NG) ■

ORIFICES – MAIN BURNER	#58 LP	#51 NG
ORIFICES - PILOT	#70 LP	#57 NG
MANIFOLD PRESSURE	11.0" W.C. LP	4.0" W.C. NG

INPUT:	MAIN BURNERS EACH	14,750 BTUH
INPUT:	PILOTS EACH	5,500 BTUH

MANIFOLD PRESSURES ARE MEASURED AT THE FIRST BURNER ORIFICE. REMOVE THE BURNER RADIANT AND TUBE AND ATTACH A MANOMETER DIRECTLY TO THE ORIFICE.

VOLTS	100-240Vac
AMPS	1.0A
FREQ	50/60Hz

CLEARANCES DEGAGEMENTS MINIMAL.

SIDES 12 INCHES COTES - 12 PO.
REAR 18 INCHES L' ARRI ERE - 18 PO.

ONLY FOR INSTALLATION IN A BUILT-IN ENCLOSURE CONSTRUCTED OF NON-COMBUSTIBLE MATERIALS

MINIMUM ACCEPTABLE SPACING BETWEEN SIMILAR ADJACENT APPLIANCES IS 3 INCHES.

•FOR OUTDOOR USE ONLY. IF STORED INDOORS, DETACH & LEAVE CYLINDER OUTDOORS.

•DISCONNECT LP CYLINDERS OR NATURAL GAS SUPPLY WHEN NOT IN USE.

•CAUTION: USE ONLY GAS REGULATOR SUPPLIED WITH APPLIANCE. THIS REGULATOR IS SET FOR AN OUTLET PRESSURE OF 4.0 (NG) OR 11 (LP) INCHES WATER COLUMN.

•DO NOT USE THIS APPLIANCE UNDER OVERHEAD UNPROTECTED COMBUSTIBLE SURFACES.

•FOR USE IN NON-COMBUSTIBLE LOCATIONS ONLY, KEEP THE AREA AROUND THIS APPLIANCE CLEAR OF LEAVES, GRASS AND OTHER COMBUSTIBLE MATERIALS.

•DO NOT STORE A SPARE LP GAS CYLINDER UNDER OR NEAR THIS APPLIANCE.

•NEVER FILL THE CYLINDER BEYOND 80 PERCENT FULL.

WARNING: IMPROPER INSTALLATION ADJUSTMENT, ALTERATION, SERVICE OR MAINTENANCE CAN CAUSE PROPERTY DAMAGE, INJURY OR DEATH. READ THE INSTALLATION OPERATING AND MAINTENANCE INSTRUCTIONS THOROUGHLY BEFORE INSTALLATION OR SERVICING THIS EQUIPMENT.

WARNING: ELECTRICAL GROUNDING INSTRUCTIONS

A) USE ONLY WITH A GFI PROTECTED CIRCUIT
B) USE ONLY EXTENSION CORDS APPROVED FOR OUTDOOR USE MARKED WITH A W-A, AND RATED FOR THE POWER OF THIS APPLIANCE

MADE IN CANADA FABRIQUE AU CANADA

•POUR USAGE A L'EXTERIEUR SEULEMENT. SI ENTREPOSE A L'INTER-IEUR, D'ETACHER LES BOUTEILLES ET LES LAISSER A L'EXTERIEUR.

•L'ALIMENTATION EN GAZ DOIT ETRE COUPEE A LA BOUTEILLE D'ALIMENTATION EN GAZ LORSQUE CET APPAREIL N'EST PAS UTILISE.

•MISE EN GARDE: UTILISEZ SEULEMENT LE REGULATEUR FOURNIS AVEC L'APPAREIL. CE REGULATEUR EST REGLE POUR UNE PRESSION DE SORTIE DE 4.0 (NG) OU 11 (PL) PO COLONNE D'EAU.

• NE PAS UTILISER CET APPAREIL SOUS DES SURFACES COMBUSTILES NON PROTEGEES.

•DOIT ETRE UTILISE SEULEMENT DANS DES LOCAUX NON INFLAMMABLES. GARDER A DISTANCE L'HERBE, FEUILLES ET AUTRE MATERIAUX COMBUSTIBLES.

•NE RANGEZ PAS UNE BOUTEILLE DE GAZ PROPANE DE RECHANGE SOUS OU PRÈS DE CET APPAREIL

•NE JAMAIS REMPLIR PAS LE CYLINDRE AU-DELÀ DE 80 POUR CENT

AVERTISSEMENT: UNE INSTALLATION, UN ADJUSTEMENT. UNE ALTERATION, UN SERVICE OU UN ENTRETIEN NON CONFORME AUX NORMES PEUT CAUSER DES DOMMAGES A LA PROPRIETE, DES BLESSURES OU LA MORT. LISEZ ATTENTIUEMENT LES DIRECTIVES D'INSTALLA-TION, D'OPERATION ET D'ENTRETIEN AVANT DE FAIRE L'INSTALLATION OU L'ENTRETIEN DE CET EQUIPEMENT.

AVERTISSEMENT: INSTRUCTIONS DE MISE À LA TERRE ÉLECTRIQUE

A) UTILISER UNIQUEMENT AVEC UN CIRCUIT PROTÉGÉ DDFT
B) N'UTILISEZ QUE DES RALLONGES APPROUVÉES POUR UNE UTILISATION EXTÉRIEURE MARQUÉES D'UN W-A ET DONT LA PUISSANCE DE CET APPAREIL

LIGHTING AND OPERATING INSTRUCTIONS

- OPEN ALL LIDS WHILE LIGHTING
- TURN OFF ALL BURNERS AND PILOT VALVES.
- TURN OFF GAS SUPPLY (LP CYLINDER VALVE).
- OPEN GAS VALVE, WAIT 15 SECONDS.
- TURN PILOT VALVE TO ON POSITION AND IGNITE.
- OPEN AND ADJUST MAIN BURNER VALVE AS DESIRED.

IF IGNITION DOES NOT TAKE PLACE, TURN OF ALL VALVES, WAIT 5 MINUTES AND REPEAT.

SHUT DOWN: TURN ALL BURNERS AND PILOT VALVES TO THE OFF POSITION. TURN OFF AND DISCONNECT CONNECT GAS SUPPLY. DISCONNECT LP SUPPLY CYLINDERS WHEN NOT IN USE.

CLEAN THE APPLIANCE REGULARLY, ADD WATER TO THE GREASE TRAYS AND FOLLOW THE OPERATIONS MANUAL.

MISE EN MARCHE ET OPERATION

- SOULEVEZ TOUS COUVERCLES PENDANT L'ALLUMAGE
- FERMEZ TOUS SOUPAPES DE BRÛLEUR ET DE PILOTE.
- FERMEZ L'ALIMENTATION EN GAZ. (SOUPAPE DE CYLINDRE LP.)
- OUVREZ L'ALIMENTATION EN GAZ. ATTENDRE 15 SEC.
- METTRE LE(S) PILOTE(S) A ON ET ALLUMER.
- OUVREZ LES SOUPAPES DE BRÛLEUR COMME DESIRÉ

SI L'APPAREIL NE S'ALLUME PAS, FERMEZ TOUS SOUPAPES, ATTENDRE 5 MIN. ET REPETER.

FERMETURE: METTRE TOUS SOUPAPES DE BRÛLEUR ET DE PILOTE A OFF. FERMEZ ET DEBRANCHER L'ALIMENTATION EN GAZ. DEBRANCHER LE(S) CYLINDRE(S) LP. LORSQUE L'APPAREIL N'EST PAS UTILISÉ.

NETTOYER LA GRILLE REGULIEREMENT PUIS SUIVRE LA MANUEL D'OPERATION.

GAS-FIRED
c UL US
LISTED
MH64834
Outdoor Cooking Gas Appliance

Appendix "A" Cont'd

SIDE BURNER RATING PLATE

MANUFACTURED BY/FABRIQUE PAR

CROWN VERITY INC.
37 ADAMS BLVD
BRANTFORD, ON, CANADA N3S 7V8
www.crownverity.com

CONFORMS TO ANSI STANDARD Z83.11 2016 / CSA 1.8 2016
CONFORMS TO ANSI STANDARD Z21.58 2018 / CSA 1.6 2018

SERIAL #: SB000001

MODEL# ICM-SB ■ IBISC-SB ■ IBISB ■

GAS TYPE: PROPANE (LP) ■ NATURAL GAS (NG) ■

ORIFICES – MAIN BURNERS	#58 LP	#51 NG
MANIFOLD PRESSURE	11.0" W.C. LP	4.0" W.C. NG

INPUT:	MAIN BURNERS EACH	12,000 BTUH

MANIFOLD PRESSURES ARE MEASURED AT THE FIRST BURNER ORIFICE. REMOVE THE BURNER RADIANT AND TUBE AND ATTACH A MANOMETER DIRECTLY TO THE ORIFICE.

VOLTS	100-240Vac
AMPS	1.0A
FREQ	50/60Hz

CLEARANCES

SIDES 12 INCHES
REAR 18 INCHES

DEGAGEMENTS MINIMAL.

COTES - 12 PO.
L' ARRI ERE - 18 PO.

OFF POSITION

REAR BURNER

OFF POSITION

FRONT BURNER

•FOR OUTDOOR USE ONLY. IF STORED INDOORS, DETACH & LEAVE CYLINDER OUTDOORS.

•DISCONNECT LP CYLINDERS OR NATURAL GAS SUPPLY WHEN NOT IN USE.

•CAUTION: USE ONLY GAS REGULATOR SUPPLIED WITH APPLIANCE. THIS REGULATOR IS SET FOR AN OUTLET PRESSURE OF 4.0 (NG) OR 11 (LP) INCHES WATER COLUMN.

•DO NOT USE THIS APPLIANCE UNDER OVERHEAD UNPROTECTED COMBUSTIBLE SURFACES.

•FOR USE IN NON-COMBUSTIBLE LOCATIONS ONLY, KEEP THE AREA AROUND THIS APPLIANCE CLEAR OF LEAVES, GRASS AND OTHER COMBUSTIBLE MATERIALS.

•DO NOT STORE A SPARE LP GAS CYLINDER UNDER OR NEAR THIS APPLIANCE.

•NEVER FILL THE CYLINDER BEYOND 80 PERCENT FULL.

WARNING: IMPROPER INSTALLATION ADJUSTMENT, ALTERATION, SERVICE OR MAINTENANCE CAN CAUSE PROPERTY DAMAGE, INJURY OR DEATH. READ THE INSTALLATION OPERATING AND MAINTENANCE INSTRUCTIONS THOROUGHLY BEFORE INSTALLATION OR SERVICING THIS EQUIPMENT.

WARNING: ELECTRICAL GROUNDING INSTRUCTIONS

A) USE ONLY WITH A GFI PROTECTED CIRCUIT
B) USE ONLY EXTENSION CORDS APPROVED FOR OUTDOOR USE MARKED WITH A W-A, AND RATED FOR THE POWER OF THIS APPLIANCE

MADE IN CANADA FABRIQUE AU CANADA

•POUR USAGE A L'EXTERIEUR SEULEMENT. SI ENTREPOSE A L'INTER-IEUR, D'ETACHER LES BOUTEILLES ET LES LAISSER A L'EXTERIEUR.

•L'ALIMENTATION EN GAZ DOIT ETRE COUPEE A LA BOUTEILLE D'ALIMENTATION EN GAZ LORSQUE CET APPAREIL N'EST PAS UTILISE.

•MISE EN GARDE: UTILISEZ SEULEMENT LE REGULATEUR FOURNIS AVEC L'APPAREIL. CE REGULATEUR EST REGLE POUR UNE PRESSION DE SORTIE DE 4.0 (NG) OU 11 (PL) PO COLONNE D'EAU.

• NE PAS UTILISER CET APPAREIL SOUS DES SURFACES COMBUSTILES NON PROTEGEES.

•DOIT ETRE UTILISE SEULEMENT DANS DES LOCAUX NON INFLAMMABLES. GARDER A DISTANCE L'HERBE, FEUILLES ET AUTRE MATERIAUX COMBUSTIBLES.

•NE RANGEZ PAS UNE BOUTEILLE DE GAZ PROPANE DE RECHANGE SOUS OU PRÈS DE CET APPAREIL

•NE JAMAIS REMPLIR PAS LE CYLINDRE AU-DELÀ DE 80 POUR CENT

AVERTISSEMENT: UNE INSTALLATION, UN ADJUSTEMENT. UNE ALTERATION, UN SERVICE OU UN ENTRETIEN NON CONFORME AUX NORMES PEUT CAUSER DES DOMMAGES A LA PROPRIETE, DES BLESSURES OU LA MORT. LISEZ ATTENTIUEMENT LES DIRECTIVES D'INSTALLA-TION, D'OPERATION ET D'ENTRETIEN AVANT DE FAIRE L'INSTALLATION OU L'ENTRETIEN DE CET EQUIPEMENT.

AVERTISSEMENT: INSTRUCTIONS DE MISE À LA TERRE ÉLECTRIQUE

A) UTILISER UNIQUEMENT AVEC UN CIRCUIT PROTÉGÉ DDFT
B) N'UTILISEZ QUE DES RALLONGES APPROUVÉES POUR UNE UTILISATION EXTÉRIEURE MARQUÉES D'UN W-A ET DONT LA PUISSANCE DE CET APPAREIL

LIGHTING AND OPERATING INSTRUCTIONS

- OPEN ALL LIDS WHILE LIGHTING
- TURN OFF ALL BURNERS AND PILOT VALVES.
- TURN OFF GAS SUPPLY (LP CYLINDER VALVE).
- OPEN GAS VALVE, WAIT 15 SECONDS.
- TURN PILOT VALVE TO ON POSITION AND IGNITE.
- OPEN AND ADJUST MAIN BURNER VALVE AS DESIRED.

IF IGNITION DOES NOT TAKE PLACE, TURN OF ALL VALVES, WAIT 5 MINUTES AND REPEAT.

SHUT DOWN: TURN ALL BURNERS AND PILOT VALVES TO THE OFF POSITION. TURN OFF AND DISCONNECT CONNECT GAS SUPPLY. DISCONNECT LP SUPPLY CYLINDERS WHEN NOT IN USE.

CLEAN THE APPLIANCE REGULARLY, ADD WATER TO THE GREASE TRAYS AND FOLLOW THE OPERATIONS MANUAL.

MISE EN MARCHE ET OPERATION

- SOULEVEZ TOUS COUVERCLES PENDANT L'ALLUMAGE
- FERMEZ TOUS SOUPAPES DE BRÛLEUR ET DE PILOTE.
- FERMEZ L'ALIMENTATION EN GAZ. (SOUPAPE DE CYLINDRE LP.)
- OUVREZ L'ALIMENTATION EN GAZ. ATTENDRE 15 SEC.
- METTRE LE(S) PILOTE(S) A ON ET ALLUMER.
- OUVREZ LES SOUPAPES DE BRÛLEUR COMME DESIRÉ

SI L'APPAREIL NE S'ALLUME PAS, FERMEZ TOUS SOUPAPES, ATTENDRE 5 MIN. ET REPETER.

FERMETURE: METTRE TOUS SOUPAPES DE BRÛLEUR ET DE PILOTE A OFF. FERMEZ ET DEBRANCHER L'ALIMENTATION EN GAZ. DEBRANCHER LE(S) CYLINDRE(S) LP. LORSQUE L'APPAREIL N'EST PAS UTILISÉ.

NETTOYER LA GRILLE REGULIEREMENT PUIS SUIVRE LA MANUEL D'OPERATION.

GAS-FIRED
C UL US
LISTED
MH64834
Outdoor Cooking Gas Appliance

Appendix "B"

PRESSURE DROP TABLE (See INDEX: "Gas Connections" for further details).

The BTU's for each appliance are listed in the tables below for reference. Find the maximum BTU requirements for the appliance(s) purchased adding the combined BTU's together. Cross reference the total BTU's against "Table 3" to determine the maximum allowable supply line length for the BTU's required. If the supply line length available does not support the BTU requirements, the pipe size will need to be changed accordingly. Please contact a certified gas technician for additional size options.

Maximum Runs for All Appliances on a supply Line: Table 3

Run Length 3/4 Pipe (in feet)	Max BTU for All Appliances on Line
10	360,000
20	245,000
30	198,000
40	169,000
50	150,000
60	135,000
70	123,000
80	115,000

BTU Grills: Table 1

	BTU's LP Pilot Orifice - 70	BTU's LP Burner Orifice - 58	BTU's NG Pilot Orifice - 57	BTU's NG Burner Orifice - 51	Total BTU's NG/LP
IBI30	5,500	14,750	5,500	14,750	64,500
IBI36	5,500	14,750	5,500	14,750	79,250
IBI42	5,500	14,750	5,500	14,750	94,000
IBI48	5,500	14,750	5,500	14,750	108,750
IBI482RD	5,500	14,750	5,500	14,750	94,000
IGM24	5,500	14,750	5,500	14,750	49,750
IGM36	5,500	14,750	5,500	14,750	79.250
IGM42	5,500	14,750	5,500	14,750	94,000
IE30	5,500	14,750	5,500	14,750	64,500
IE36	5,500	14,750	5,500	14,750	79,250
IE42	5,500	14,750	5,500	14,750	94,000
IE36I (GRILL)	5,500	14,750	5,500	14,750	79,250

BTU Side Burners: Table 2

	BTU's LP Burner Orifice - 58	BTU's NG Burner Orifice - 52	Total BTU's NG/LP
IBISB	12,000	12,000	24,000
IBISC-SB	12,000	12,000	24,000
ICM-SB	12,000	12,000	24,000
IE36I (SB)	12,000	12,000	24,000

Exploded Parts View

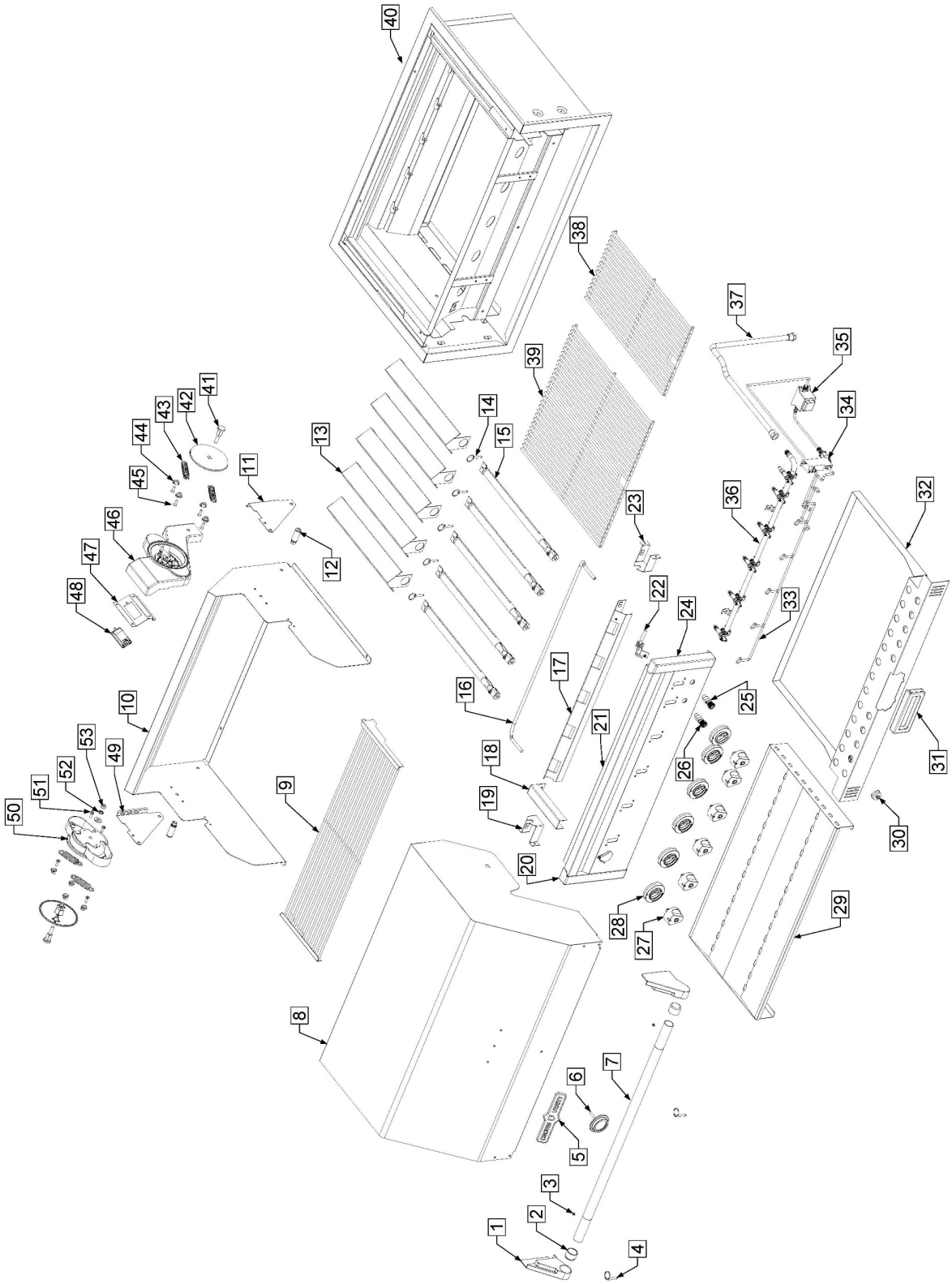

Grill Parts List

ITEM	DESCRIPTION	PART NUMBER
1	HANDLE END CAP	ZCV-EMC-RD-1014
2	HANDLE INSERT	ZCV-EMC-RD-1000
3	DOME GROMMET	ZCV-MS35489-1X
4	DOME RETAINER PIN	ZCV-2020
5	DOME NAME PLATE	ZCV-2003-16
6	DOME THERMOMETER	ZCV-2005
7	DOME HANDLE	ZCV-EMC-RD36-3-1002
8	OUTER DOME ASSEMBLY	ZCV-EMC-RD36-5-1000
9	BUN RACK	CV-ABR-36/72
10	INNER DOME ASSEMBLY	ZCV-EMC-RD36-6-1000
11	RH BUN RACK BRACKET	ZCV-EMC-RD-1009
12	DOME STOP HARDWARE	ZCV-4040
13	RADIANT	ZCV-2070
14	BURNER PIN	ZCV-2020
15	TUBE BURNER	ZCV-2060
16	PILOT TUBE	ZCV-3032-BI
17	PILOT TUBE COVER	ZCV-EMC-GB36-2
18	LIGHTER TUBE COVER	ZCV-EMC-GB-6
19	PILOT TUBE COVER BRACKET LH	ZCV-EMC-GB-7
20	FACE END CAP LH	ZCV-EMC-GB-1003-1
21	GRILL FACE	ZCV-EMC-36-3-1000
22	ELECTRODE ASSEMBLY	ZCV-2139
23	PILOT TUBE COVER BRACKET RH	ZCV-EMC-GB-5
24	FACE END CAP RH	ZCV-EMC-GB-1002-1
25	LIGHT SWITCH	ZCV-4036
26	IGNITION SWITCH	ZCV-4035
27	BURNER KNOB	ZCV-2094
28	BURNER BEZEL	ZCV-2094-2
29	DEFLECTOR PLATE ASSEMBLY	ZCV-IBI36-6-1
30	GREASE TRAY END CAP	F4-3025 Cap
31	INFINITE HANDLE ASSEMBLY	ZCV-EMC-DH2
32	GREASE TRAY ASSEMBLY	ZCV-IBI-36-6-2
33	LIGHT HARNESS ASSEMBLY	ZCV-4027-KFD
34	SPARK CONTROLLER	ZCV-4031
35	POWER SUPPLY	ZCV-4034
36	GRILL MANIFOLD ASSEMBLY	ZCV-CM-36-R-C
37	MANIFOLD HOSE ASSEMBLY	ZCV-4006
38	12 INCH GRATE	ZCV-2170
39	22 INCH GRATE	ZCV-2150
40	GRILL BODY ASSEMBLY	ZCV-EMC-GB36
41	PIVOT BOLT	ZCV-EMC-RDSA-3
42	SPRING ASSIST COVER	ZCV-EMC-RDSA-2
43	TENSION SPRING	ZCV-EMC-RDSA-5

44	SPRING RETAINER	ZCV-EMC-RDSA-6
45	.250-20 COUNTERSUNK SCREW	ZCV-8084
46	DOME LIGHT HOUSING	ZCV-EMC-RDSA-8
47	DOME LIGHT COVER	ZCV-EMC-RDSA-7
48	DOME LIGHT	ZCV-EMC-RDSA-9
49	LH BUN RACK BRACKET	ZCV-EMC-RD-1010
50	SPRING ASSIST HOUSING	ZCV-EMC-RDSA-1
51	.250-20 PAN HEAD SCREW	ZCV-2196
52	.375 LOCK WASHER	ZCV-2010
53	.375-16 LOCKING NUT	ZCV-8081