PHILIPS

EasyKey

5000 Series

Smart Rim Door Lock

5100

User manual

Register products and get support on the following site:
www.philips.com/support

The appearance of the products are slightly different according to the different function combinations. For details, please be subject to the actual product purchased.

Contents

1 Important information 02

Security
Caution
Disposal of used products and batteries

2 Install your EasyKey 03

Packaging list
Exploded views
Pre-installation instructions
Installation steps

3 Get to know your EasyKey 07

Outside escutcheon
Inside escutcheon

4 How to set up your EasyKey 08

Pre-setup instructions

-Modify Master PIN code
-User settings
-Delete a user
-System settings
-Extended functions
-System query
-Local query
-Bluetooth Settings

5 How to use your EasyKey 14

Unlock

Outside Unlocking
-With a PIN code
-With a fingerprint(optional)
-With a card

Inside Unlocking
-With mechanical key

Lock

Auto/Manual modes
-Outside locking
-Inside locking

6 Other functions 16

Restore to factory settings
One-button mute function
Outside forced lock function

7 Meanings & Use of indicators 18

Door status indicator
Low battery indicator
Outside forced lock indicator
Mute mode indicator

8 Troubleshooting 20

Alarm types and alarm modes
How to apply an emergency power
How to replace batteries

1 Important information

Security

◆Before using Philips EasyKey, please read and understand all instructions. Damage caused by non-compliance with the instructions will not be covered by warranty.

◆Use only the manufacturer-specified accessories/components.

◆Use only the alkaline batteries the product is equipped with, or use the same specification type of alkaline batteries.

◆Do not forcibly disassemble this product to avoid triggering an alarm or damaging the product.

◆Do not scrape the fingerprint sensor with sharp objects, otherwise it may cause permanent damage.

◆Do not expose products to environments where there is water leakage or splashing.

◆Do not expose the product to corrosive substances to prevent damaging the protective cover.

◆Pleae clean the product with a soft cloth.

◆Do not remove the battery during setting up and operating.

◆Please let a professional technician to install the door lock and follow the installation guidelines provided.Do not disassemble the lock by yourself. Keep the relevant sealed stickers properly. Do not easily disclose the password information.

◆Please modify the default master PIN code immediately after finishing installing and debugging, and keep the mechanical key properly.

◆Please replace all the batteries immediately if there is a low battery alarm. Please make sure to correctly match the poles (+/-) when installing the batteries.

Caution

◆Do not place the battery near fire sources to avoid explosion.

◆Do not use any emergency power supply that does not meet the safety requirements to power up the product.

◆Do not connect the 2 poles of the batteries with metals to avoid short circuit which may lead to an explosion.

◆Please make sure any component replacement is executed by Philips, Philips authorized service center or professional technicians.

◆Do not use accessories or parts that have been produced by other manufacturers or have not been specifically recommended by Philips. The use of such accessories and parts may void your warranty.

Disposal of used products and batteries

◆You can have your locks reclaimed at Philips authorized service centers. You will receive corresponding compensation if your products meet our conditions.

◆Please familiarize yourself with the local electronic product collection system.

◆Please follow local regulations and do not discard used products into ordinary household waste.

◆Proper disposal of used products can help to avoid potential negative impacts on the environment and human health.

◆Batteries must not be disposed of with ordinary household waste.

◆Please familiarize yourself with the local regulations on batteries classification recycling. Disposing of batteries properly can help avoid a negative impact on the environment and human health.

2 Install your EasyKey

Packaging list

This packaging list is for reference only. Please refer to the actual packaging contents.

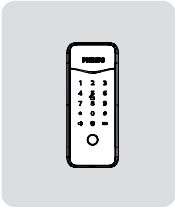

①Outside escutcheon (including silicone pad)

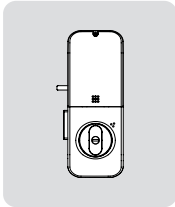

②Inside escutcheon (including silicone pad)

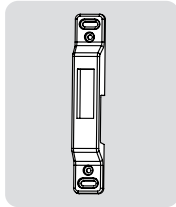

③Striker

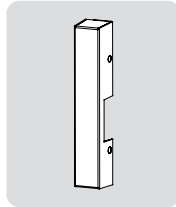

④Striker cover

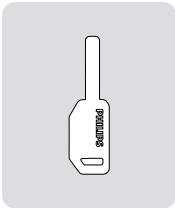

⑤Mechanical key x2

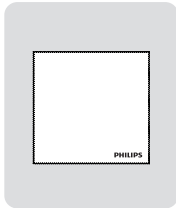

⑥Cleaning Pad

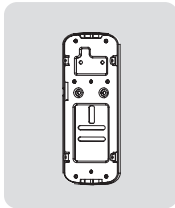

⑦Mounting plate

⑧User manual

⑨Warranty card

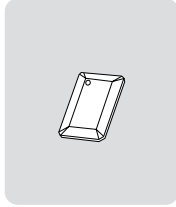

⑩Smart key card x2

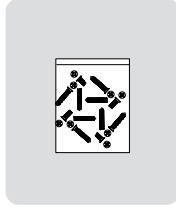

⑪Installation kit

Exploded views

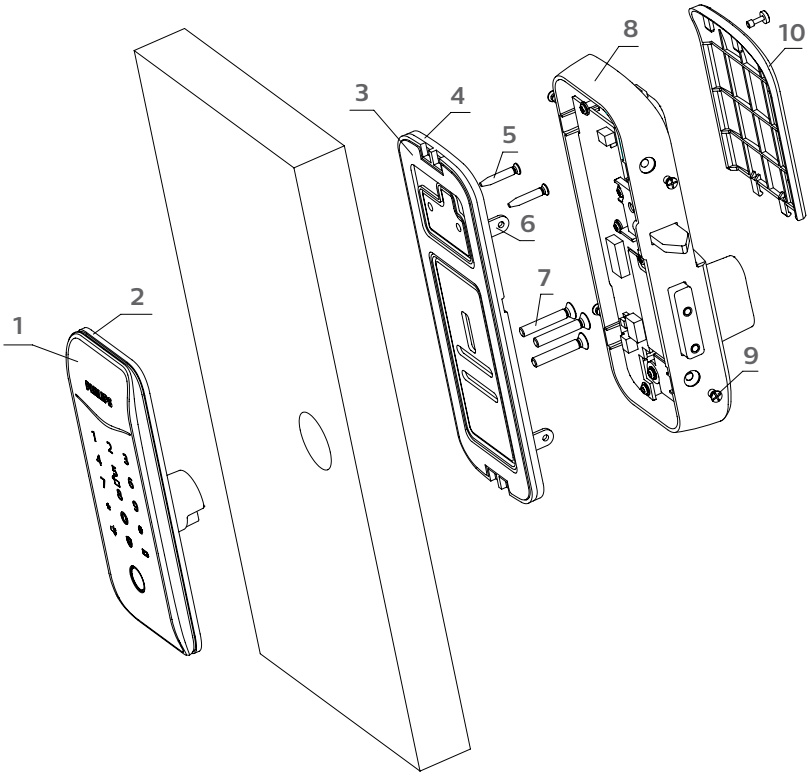

1.Outside escutcheon (x1)

2.Outside escutcheon silicone pad (x1)

3.Inside escutcheon silicone pad (x1)

4.Inner plastic pad (x1)

5.M4 tapping screw (x2)

6.Mounting plate (x1)

7.M5 flat-head screw (x3)

8.Inside escutcheon (x1)

9.M4X6 chamfer head screw (x4)

10.Battery cover (x1)

Pre-installation instruction

Step 1 | Check the door opening direction

This product can be installed on doors of 4 opening directions: left-out pull, right-in push, right-out pull and left-in push.

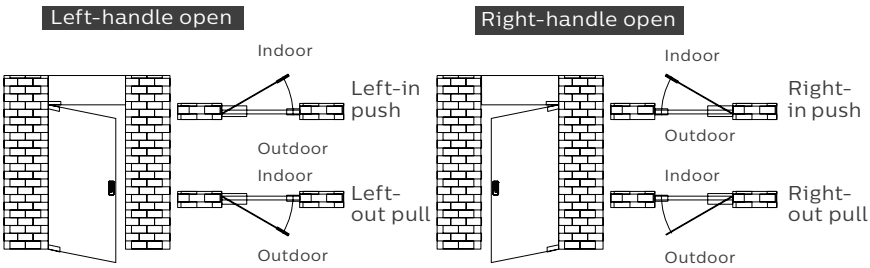

Step 2 Effects of various door opening directions

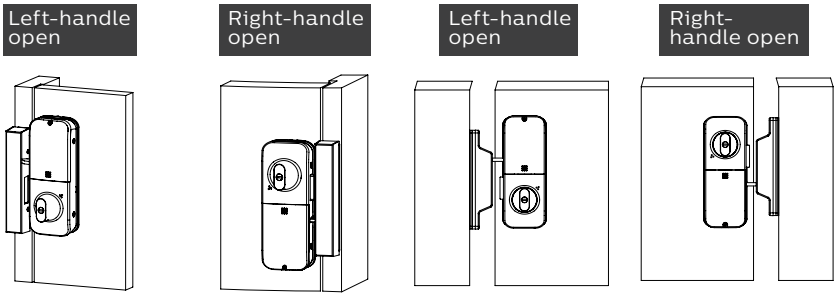

Step 3 | Select the correct drilling template according to the door opening direction

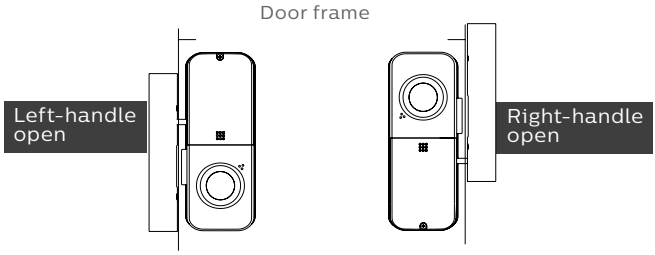

Installation steps

The following installation steps apply to Left -handle opening. If your door is left-handle opening, please turn the inside escutcheon upside down.

1. Pass the connecting cable of the outside escutcheon through the door hole.
2. Fix the mounting plate with screws.
3. Insert the cable into the inside escutcheon.

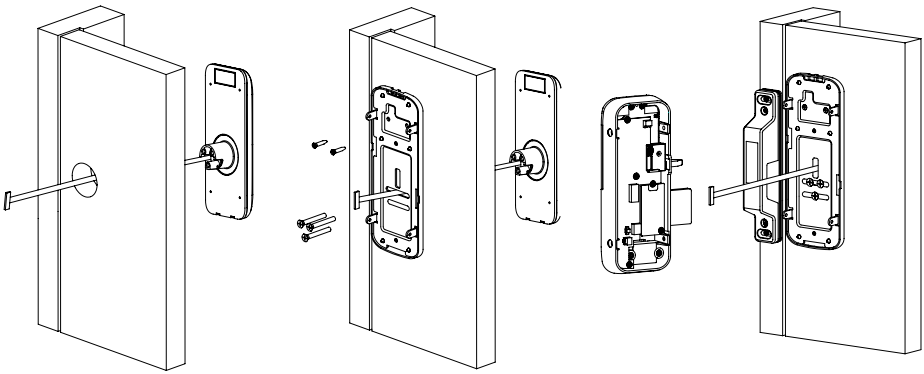

4. Fix the inside escutcheon with screws.
5. Fix the striker with screws.
6. Fix the striker cover with screws.

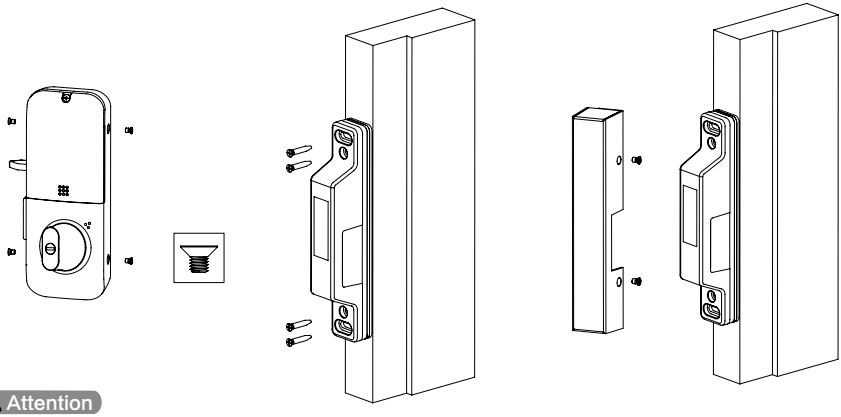

Attention

Please make sure to hide the extra cable in the door hole.

3 Get to know your EasyKey

Outside escutcheon

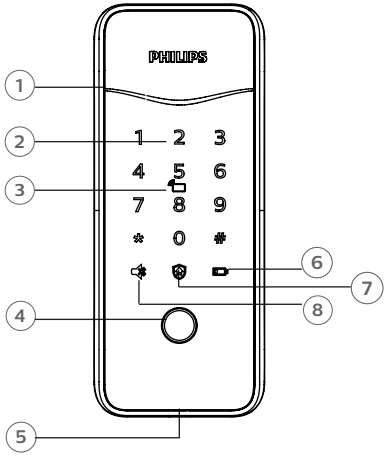

1	Door status indicator
2	Keypad
3	Card reader area
4	Fingerprint
5	Emergency power interface
6	Low battery indicator
7	Outside forced lock button
8	Mute button

Inside escutcheon

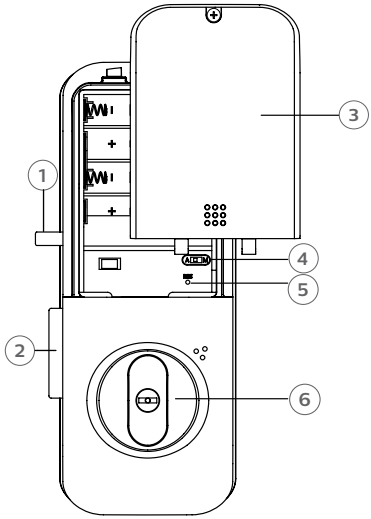

1	Sensor latch bolt
2	Main dead bolt
3	Battery cover
4	Auto/Manual mode switch
5	RES buttoon
6	Mechanical key hole

4. How to set up your EasyKey

Pre-setup Instructions:

◆There are 2 operating modes in the EasyKey: General mode and dual verification mode.

General mode	Dual verification mode
Unlock with any registered identity information	Unlock with any two of PIN code,card and fingerprint(optional)

◆User Number
You can delete a single user information by its user number without having to delete everything.

◆You can record the user information in the following table for future query.

Number	Name	Fingerprint (optional)	PIN Code	Card
00				
01				
02				
03				
04				
05				
06				
07				
08				
09				

◆Icon annotation

Master PIN code

One-time user PIN code

User PIN code

User number 00-09

User number 00-99

Fingerprint

Card Reader

#

*

Attention

1.Press [*] to return to the previous menu.
2.The default master PIN code is 12345678.

◆How to enter master mode:

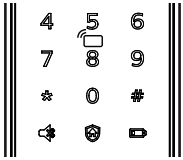

① Light up the keypad.

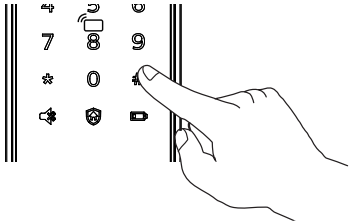

② Press [#] before inputting any other numbers. After hearing a voice prompt of "Enter master PIN code", enter your master PIN code and confirm with [#]. Then you are in master mode.

Modify master PIN code

Enter [#], enter master PIN code and confirm with [#].

Enter [1] to modify master PIN code.

Enter the new master PIN code and confirm with [#] again. Re-enter the same master PIN code and confirm with [#]. After hearing a voice prompt of “Succeeded”, press [*] to return to previous menu until you finally exit master mode.

User settings

Add a user PIN code

Enter [#], then enter master PIN code and confirm with [#].

Enter [2] to add a user record, then enter [1] to add a new user PIN code, and the system will automatically number it and generate a voice prompt.

Enter a user PIN code of 6 to 12 digits and confirm with [#]. Then re-enter the user PIN code and confirm with [#]. After hearing a voice prompt of “Succeeded”, press [*] until you exit master mode.

Add a one-time User PIN Code

Enter [#], enter master PIN code and confirm with [#].

Enter [2] to enter into user setting, then enter [2] again to add a one-time user PIN code.

Enter a one-time user PIN code of 6 to 12 digits and confirm with [#]. Then re-enter the one-time user PIN code and confirm with [#]. After hearing a voice prompt of “Succeeded”, press [*] until you exit master mode.

Add a Fingerprint(optional)

Enter [#], enter master PIN code and confirm with [#].

Enter [2] to add a user record, then enter [3] to add a user fingerprint, and the system will automatically number it and generate a voice prompt.

Place your finger against the sensor. After hearing a voice prompt of “Take away your finger and enroll again”, please take away your finger and re-place it against the sensor. After hearing a voice prompt of “Succeeded”, press [*] until you exit master mode.

Add a Key Tag

Enter [#], enter master PIN code and confirm with [#].

Enter [2] to add a user record, then enter [4] to add a user key tag, and the system will automatically number it and generate a voice prompt.

Place the key tag against the card reader until you hear a beep. After hearing a voice prompt of “Succeeded”, press [*] until you exit the master mode.

Delete a User Record

Delete a single User PIN Code

Enter [#], enter master PIN code and confirm with [#].

Enter [3] to delete a user record, then enter [1] to delete a user PIN code, and then enter [1] to delete a single user PIN code.

Enter a user code (code: 00-09) of 2 digits and confirm with[#]. After hearing a voice prompt of “Succeeded”, press [*] until you exit the master mode.

Delete All User PIN Codes

Enter [#], enter master PIN code and confirm with [#].

Enter [3] to delete a user record, then enter [1] to delete a user PIN code, and then enter [2] to delete all user PIN codes. After hearing a voice prompt of "Succeeded", press [*] until you exit the master mode.

Delete all One-time PIN Codes

Enter [#], enter master PIN code and confirm with [#].

Enter [3] to delete a user record, then enter [2] to delete all one-time user PIN code.

After hearing a voice prompt of “Succeeded”, press [*] until you exit the master mode.

Delete a Fingerprint(optional)

Enter [#], enter master PIN code and confirm with [#].

Enter [3] to delete a user record, then enter [3] to delete fingerprint record, and then enter [1] to delete one single fingerprint record.

Enter the 2-digit [user number] (00-99) of the fingerprint that is to be deleted and confirm with [#]. After hearing a voice prompt of “Succeeded”, press [*] until you exit the master mode.

Delete All Fingerprints(optional)

Enter [#], enter master PIN code and confirm with [#].

Enter [3] to delete a user record, then enter [3] to delete fingerprint record, and then enter [2] to delete all fingerprint records. After hearing a voice prompt of "Succeeded", press [*] until you exit the master mode.

Delete a Key Tag

Enter [#], enter master PIN code and confirm with [#].

Enter [3] to delete a user record, then enter [4] to delete key tag record, and then enter [1] to delete one single key tag record. After hearing a voice prompt of “Succeeded”, press [*] until you exit the master mode.

Delete All Key Tags

Enter [#], enter master PIN code and confirm with [#].

Enter [3] to delete a user record, then enter [4] to delete key tag record, and then enter [2] to delete all key tag records. After hearing a voice prompt of "Succeeded", press [*] until you exit the master mode.

System date initialization

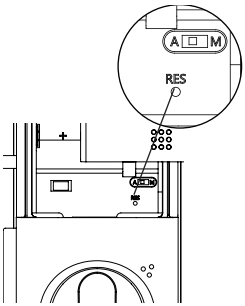

Remove the battery cover, then double press the [RES] hole with a sharp object, after hearing a voice prompt of “Restoring to default settings”, all user information will be emptied.

System Settings

Language Settings

Enter [#], enter master PIN code and confirm with [#].

Enter [4] to get into system settings, then enter [1] to get into language settings.

Choose the language as needed: For Chinese, press [1]; for English, press [2]. After hearing a voice prompt of “Succeeded”, press [*] until you exit the master mode.

Attention

The default language is English.

Volume Settings

Enter [#], then enter master PIN code and confirm with [#].

Enter [4] to get into system settings, then enter [2] to enter into volume settings.

Choose the volume as needed: For high volume, press [1]; for low volume, press [2]; for mute mode, press [3]. After hearing a voice prompt of “Succeeded”, press [*] until you exit the master mode.

Attention

The default volume is “high volume”.

Switch to Dual Verification Mode

Enter [#], then enter master PIN code and confirm with [#].

Enter [4] to get into system settings, then enter [3] to enter into identify verification methods portfolio.

For single verification method, press [1]; for dual verification method, press [2]. After hearing a voice prompt of “Succeeded”, press [*] until you exit the master mode.

Extended Functions

Enter [#], enter master PIN code and confirm with [#].

Enter [5] to get into extended functions.

To join a network, press [1]. To exit a network, press [2]. Before setting up the extended functions, please download and open Philips EasyKey (APP) from App Stores via your phone.

Attention

The extended functions are optional.

System Query

Security Code Query

Enter [#], enter master PIN code and confirm with [#].

Enter [6] to get into system query, then enter [1] to get into security code query, the system will broadcast the product series number automatically.

Attention

Directly input 400# could enter into system query.

Local Query

Enter [#], enter master PIN code and confirm with [#].

Enter [6] to get into system query, then enter [2] to get into product software version query, the system will broadcast the product software version automatically.

Attention

Directly input 114# could enter into local query.

Bluetooth Settings

Enter [#], then enter master PIN code and confirm with [#].

Enter [7] to get into Bluetooth settings menu.

To disable Bluetooth, please press [3]. After hearing a voice prompt of “Settings succeeded”, press [*] until you exit the master mode.

Attention

1.Directly input 403# to enable Bluetooth, and input 404# to disable Bluetooth.

2.When the Bluetooth is off, please press [1] to enable Bluetooth.

3. When using the newly updated EasyKey App to bind with the smart lock, users could follow up the chapter of “Add a device” to finish the binding process.

5 How to use your EasyKey

Unlock | Outside Unlocking

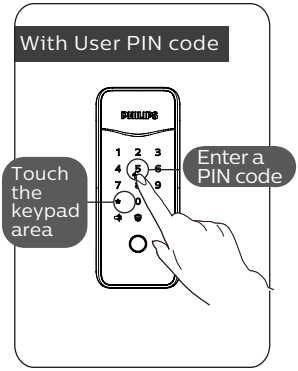

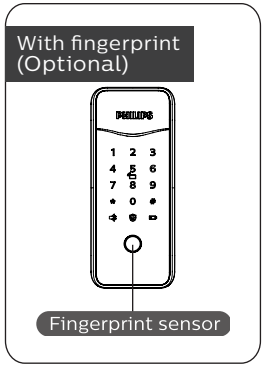

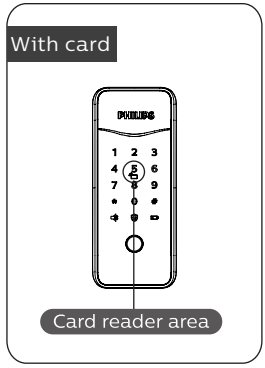

1 Touch and wake up the keypad, then enter a registered user PIN code and confirm with [#].

2 After hearing a voice prompt of “Door opened”, push or pull the handle to open the door.

1 Place the finger of which the fingerprint has been registered against the sensor.

2 After hearing a voice prompt of “Door opened”, push or pull the handle to open the door.

1 Place the key tag/card that has been successfully registered properly against the card reader.

2 After hearing a voice prompt of “Door opened”, push or pull the handle to open the door.

Unlock | Inside Unlocking

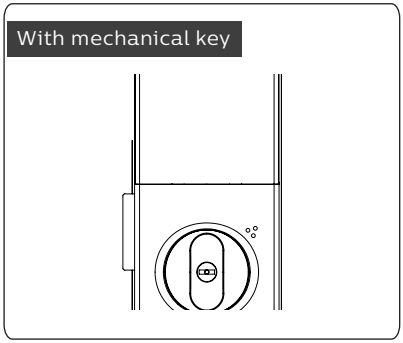

Use mechanical key to unlock.

Lock | Auto/Manual modes

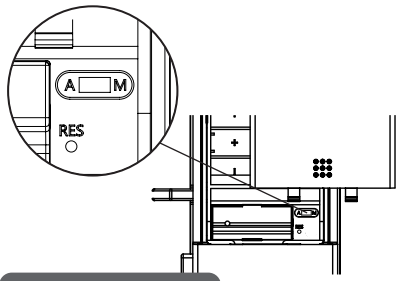

Automatic/manual toggle switch position

[A] represents automatic mode where the main deadbolt can automatically pop up to get the door locked after closing the door.

[M] represents manual mode where the main deadbolt won't automatically pop up after closing the door and the door will remain open status.

Lock from outside

When the lock is in auto mode, the deadbolt will automatically pop up after closing the door, and there will be a voice prompt of "Door closed".

When the lock is in manual mode, the deadbolt won't automatically pop up after closing the door. Only after a successful verification by fingerprint, PIN code or card can the deadbolt pop up and the door be closed. After the door is successfully locked, there will be a voice prompt of "Door closed".

Lock from inside

Under auto mode, the deadbolt will automatically pop up after closing the door. There will be a voice prompt of "Door closed".

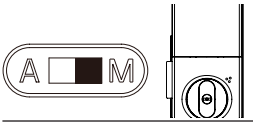

Under manual mode, the deadbolt will not pop up automatically after closing the door. You need to use the key to lock the door. After the door is successfully locked, there will be a voice prompt of "Door closed".

6 Other functions

Default Settings:One button to restore to factory settings

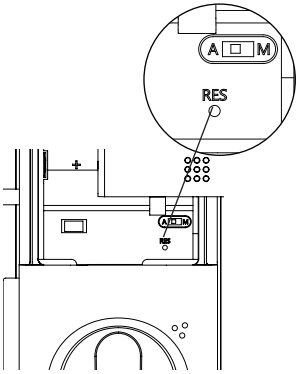

Function:
To empty all user information and restore to factory settings
Use:
Double press the [RES] with a sharp object, and all user records in the system will be emptied, and the system will restore to default settings.

One-button mute function

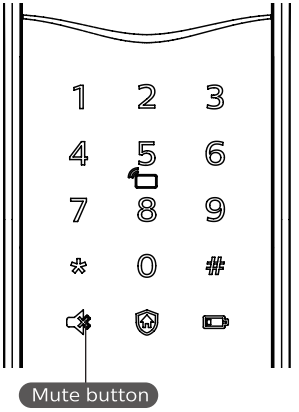

Function:
Use only one button to mute the lock by turning off the voice guide. Applicable to the scenes where you don't want to disturb your family.

How to use:
1. **Mute:** When the system is awake, long press the [Mute] button for 2 seconds to enter one-time mute mode. The button will glow green.

2. **Unmute:** When the system is awake, long press the [Mute] button for 2 seconds to restore the voice guide. The button will glow white.

Outside forced lock function

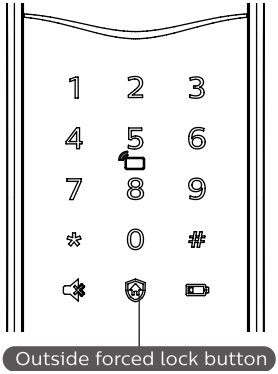

Function:
Unlocking from inside will trigger an alarm.

Use:
After the door is successfully locked, long press the functional button for 2 seconds to enter the outside forced lock mode.

Attention

Enabling the outside forced lock function will not affect unlocking from outside.

7 Meanings & Use of indicators

Lock status indicator

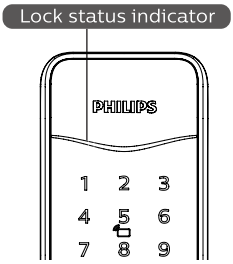

Colors of the light and the corresponding meanings:

Blue: After the system wakes up, the light will glow blue, indicating that you can operate the lock.
Green: After the door is unlocked, the light will glow green, indicating that the door has been opened.
Red: After the door is locked, the light will glow red, indicating that the door has been closed.

Low battery indicator

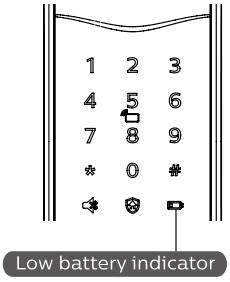

Colors of the light and the corresponding meanings:

Red: After waking up, the system will run an automatic examination on the battery voltage. If the voltage is too low, the light will flash in red and there will be a voice prompt of “Low battery. Please replace all batteries”.

Outside forced lock indicator

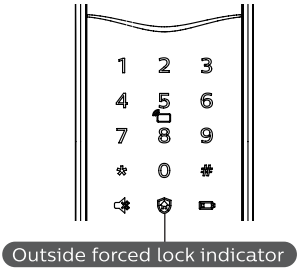

Colors of the light and the corresponding meanings:

White:
1. When the door is locked, the light will be lighted up, indicating that you can enable the outside forced lock function.
2. If you have enabled the outside forced lock function, the light will be lighted up after the system wakes up, indicating this function is under use.

Inside Deadlock Indicator

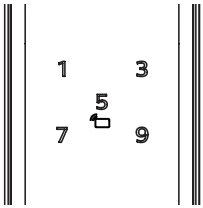

When the door is under inside deadlocking, the digital functions of the outside escutcheon will be locked.
If the system wakes up manually, the keypad will show the combination of “15937 (X)” with a voice prompt of “inside deadlocking enabled”.

Mute mode indicator

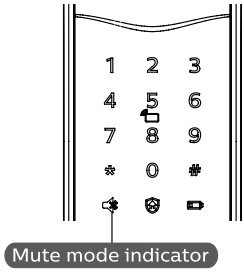

Colors of the light and the corresponding meanings:

1. **White:** Indicates the mute mode is off.
2. **Green:** Indicates the mute mode is on.

System Locked Indicator

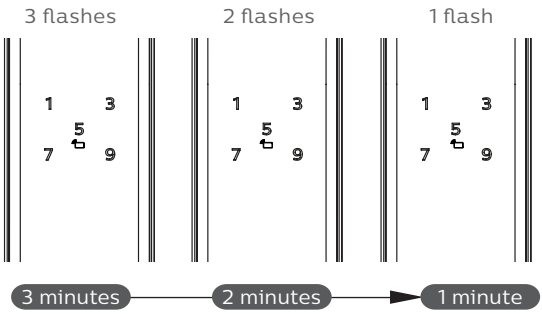

If any of the verification methods among fingerprint, password, or card/key tag has scanned to be incorrect and the number of consecutive incorrect entries reaches 5 times within 5 minutes, the EasyKey will be locked for 3 minutes.

⚠ Attention
Only under any of the verification methods above or the keypad is wakened up, will the prompt be seen.

8 Troubleshooting

Types of alarms and alarm modes

Inside unlocking alarm under outside forced lock mode

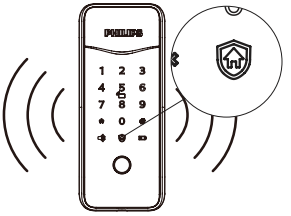

Triggering: If the lock is under outside forced lock mode, unlocking from inside will trigger the alarm.

Alarm mode: Continuous repeated alarms.

Turning off: The alarm can be turned off by a successful verification of any type.

Low battery alarm, remind you to replacing the batteries in time

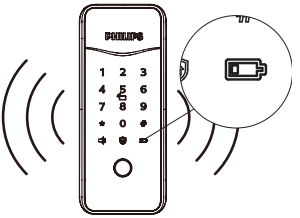

Triggering: After waking up, the system will run an automatic examination on the battery voltage. If the voltage is too low, the lock give an alarm and a voice prompt of “Low battery. Please replace all batteries”.

Alarm mode: A voice prompt of “Low battery. Please replace all batteries”.

Turning off: The alarm will be automatically turned off.

How to apply an emergency power supply

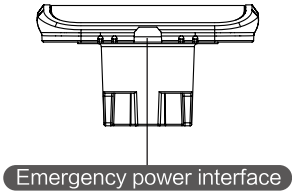

When the battery voltage is insufficient, and the door cannot be opened from the outside, you can power up the lock through the Micro USB interface by using a 5V power bank as an emergency power supply. After opening the door lock, please replace the batteries immediately.

How to replace batteries

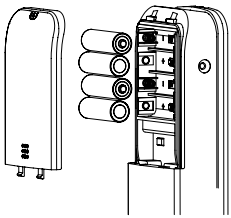

The lock is powered by four 1.5V alkaline batteries. The battery cabinet is located at the upper part of the inside escutcheon. Push the battery cover upwards to remove the batteries.

Philips and the Philips Shield Emblem are registered trademarks of Koninklijke Philips N.V. and are used under license. This product has been manufactured by and is sold under the responsibility of Shenzhen Conex Intelligent Technology Co., Ltd., and Shenzhen Conex Intelligent Technology Co., Ltd. is the warrantor in relation to this product.