Smart Ceiling Fan
CLF 325S

USER MANUAL

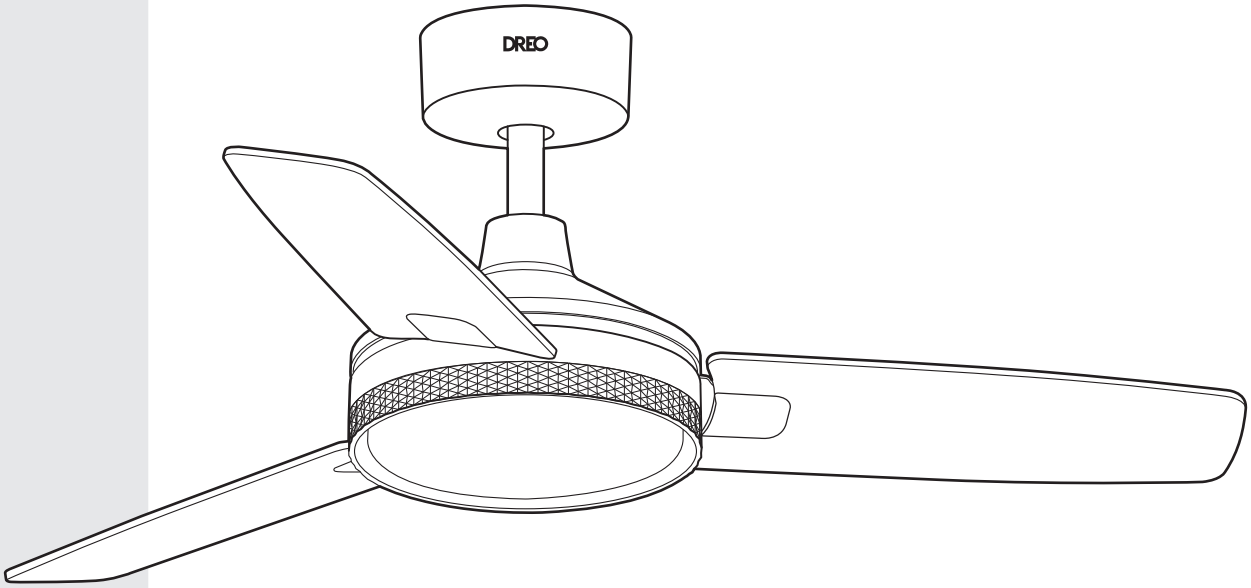

Thanks for Choosing
DREO!

Your support means the world to us.
We hope you enjoy our product as much as we did creating it.

CONTENTS

01 IMPORTANT SAFETY INSTRUCTIONS 1

02 PACKAGE CONTENTS 2

03 BEFORE INSTALLATION 3

04 ASSEMBLING THE CEILING BRACKET 4

05 ASSEMBLING THE BLADES 5-6

06 ASSEMBLING THE DOWNROD 7-8

07 HANGING AND CONNECTING YOUR CEILING FAN 9-11

08 ASSEMBLING THE LIGHT COVER 12

09 USING YOUR CEILING FAN 13-16

10 CONNECTING TO YOUR CEILING FAN 17

11 CLEANING AND MAINTENANCE 18

12 TROUBLESHOOTING 19

13 DREO CUSTOMER CARE 20-21

IMPORTANT SAFETY INSTRUCTIONS

01

READ AND SAVE THESE INSTRUCTIONS FOR HOUSEHOLD USE ONLY

1. **WARNING:** To Reduce The Risk Of Fire, Electric Shock, Or Personal Injury, Mount Directly To A Structural Framing Member Or To An Outlet Box Marked Acceptable for Fan Support of 15.9 kg (35 lbs). For Outlet Box Mounting, Use Mounting Screws Provided With The Outlet Box.
2. To avoid possible electrical shock, before installing or servicing your fan, disconnect the power by turning off the circuit breakers to the outlet box and associated wall switch location. If you cannot lock the circuit breakers in the off position, securely fasten a prominent warning device, such as a tag, to the service panel.
3. To reduce the risk of electric shock, this fan must be installed with an isolating wall control/switch.
4. **WARNING:** To reduce the risk of personal injury, do not bend the blade brackets when installing the blade brackets, balancing the blades, or cleaning the fan. Do not insert foreign objects in between rotating fan blades.
5. Chemical burn hazard. Keep batteries away from children. This remote contains a lithium button cell battery. If a new or used lithium button/coin cell battery is swallowed or enters the body, it can cause severe internal burns and can lead to death in as little as 2 hours. Always completely secure the battery compartment. If the battery compartment does not close securely, stop using the product, remove the batteries, and keep it away from children. If you think batteries might have been swallowed or placed inside any part of the body, seek immediate medical attention. Dispose of cells properly and keep away from children. Even used cells may cause injury.
6. Non-rechargeable batteries are not to be recharged. Exhausted batteries are to be removed from the product.
7. This appliance can be used by children aged from 8 years and above and persons with reduced physical, sensory or mental capabilities or lack of experience and knowledge if they have been given supervision or instruction concerning use of the appliance in a safe way and understand the hazards involved. Children shall not play with the appliance. Cleaning and user maintenance shall not be made by children without supervision. It is recommended that children be supervised to ensure that they are not using the appliance improperly.
8. **WARNING:** To reduce the risk of fire or electric shock or injury to persons, do not use replacement parts that have not been recommended by the manufacturer (e.g. parts made at home using a 3D printer).
9. Read all instructions and safety information before installing your new fan. Review the accompanying assembly diagrams.
10. Before installing the fan, disconnect the power by removing fuses or turning off circuit breakers.
11. Make sure all electrical connections comply with local law and the national electrical code. Please hire a qualified electrician or consult a do-it -yourself wiring handbook if you are unfamiliar with installing electrical wiring.
12. Make sure the installation site is roomy enough to allow fan blades to rotate. There is at least seven feet from the floor to fan blades' tips.
13. If you are mounting the fan on a ceiling outlet box, please use a metal outlet box. Secure the box directly to the building structure. The outlet box and its support must be able to support the rotating fan (at least 35 lbs).Do not use a plastic outlet box. Attach the mounting bracket using the ceiling outlet box's hardware.
14. After installing the fan, make sure all the connections are secured so that the fan won't fall.
15. Do not insert anything between fan blades while the fan is operating.
16. Turn the fan off and wait for it to stop before reversing fan's rotating direction.
17. **WARNING:** To reduce the risk of electrical shock and personal injury, do not install the fan on a sloped ceiling and do not use this fan with any solid-state fan speed control device, or rheostat. You must install the outlet box using the two steel screws and lock washers coming with the fan.
18. All wiring must be in accordance with national and local electrical codes ANSI/NFPA 70. If you are unfamiliar with wiring, use a qualified electrician.
19. After making the wire connections, the wires should be spread apart with the grounded conductor and the equipment-grounding conductor on one side of the outlet box and the ungrounded conductor on the other side of the outlet box.
20. The splices after being made should be turned upward and pushed carefully up into the outlet box.

2.1 Instructions for supply connections: the white conductor of a fan identified as grounded conductor to be connected to a grounded conductor of power supply, the black conductorof fan identified as ungrounded conductor to be connected to an ungrounded conductor of power supply, the green conductor of fan identified for equipment grounding to be connected to an equipment-grounding conductor.

22. The total weight of the fan install to outlet box is 4.2 kg, check that the outlet box is securely installed in place such that it is able to support at least the fan weight.
23. When mounted directly to the building structure, appliance installation shall not expose combustible material and do not install the appliance to a ceiling with combustible finish. The installation of the appliance cannot leave the wood of the rafters or any thermal insulation exposed to the interior of the room.
24. To Reduce The Risk Of Electric Shock, Disconnect The Electrical Supply Circuit To The Fan Before Installing Light Kit.



Electrical Shock Hazard
DANGER - This symbol indicates risks of electrical shock, which WILL result in severe personal injury or death.



Fan Fall Hazard
DANGER - This symbol indicates risks of the ceiling fan falling, which WILL result in severe personal injury or death.

Gentle Reminder:



Check the appliance regularly and refer to TROUBLESHOOTING or contact our customer support if it shows any of the following signs:

- Components or parts are damaged.
- Loud noise or unusual smell.

Specifications

Model No.	DR-HCF005S
Power Supply	120V~60Hz
Rated Power	54W
Remote Control Battery	CR2025 3V

PACKAGE CONTENTS

02

To ensure a successful installation,
first SCAN the QR code to watch the installation video

If you need help, we also provide support at 1.888.290.1688 or visit us at www.dreo.com.

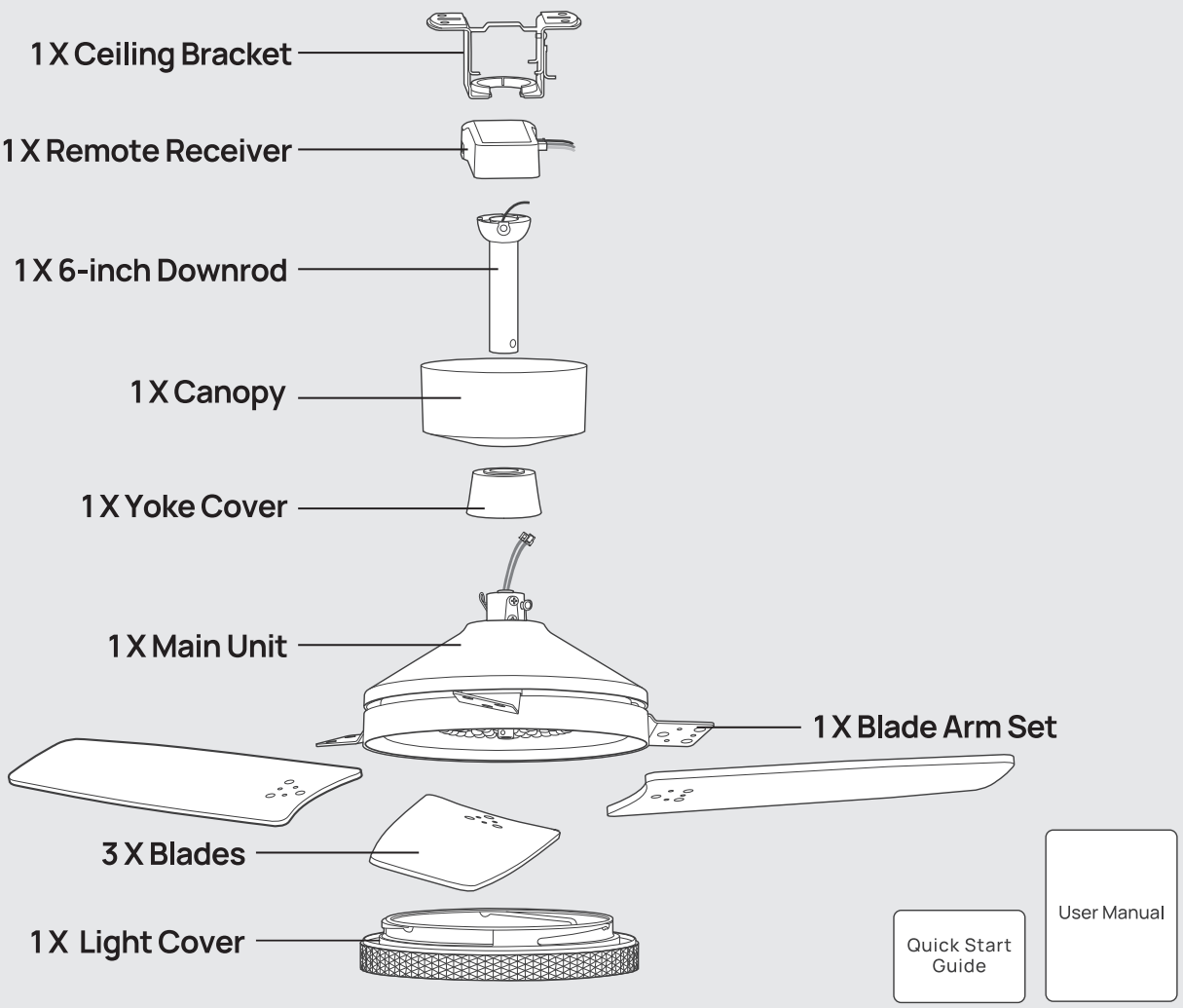

❶ Parts for Ceiling Bracket


Wood Screws X 2


Washer X 2


Cable Tie X 1


Wire Connector Cap X 3+1(extra)

❷ Parts for Blades


Screw X 9+2(extra)

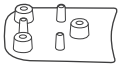
Blade Arm Covers X 3


Balancing Weight X 2


Balancing Clip X 1

❸ Parts for Remote Control Holder



3M Glue X 1


Wall-mounted Screw X 2


Remote Control (Battery Included)


Remote Control Holder



Remote Receiver X 1

BEFORE INSTALLATION 03

TOOLS NEEDED (NOT INCLUDED)

Essential Tools for a Successful Installation:

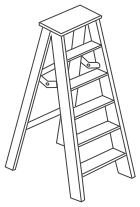
Ladder


Phillips Screwdriver


Wire Stripper

Optional Tools:

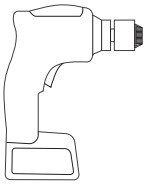
Drill


9/64" Drill Bit

WARNING: Electrical Shock Hazard. Check the wall switch control to prevent SEVERE PERSONAL INJURY OR DEATH.

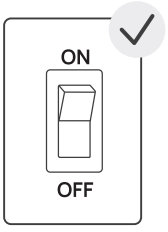

Ensure your wall switch is a conventional one that can control the fan and light on/off.

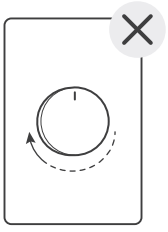

Do not connect it to a dimmer or the fan's gear switch.

WARNING: Fan Fall Hazard. Check the room dimensions control to prevent SEVERE PERSONAL INJURY OR DEATH.

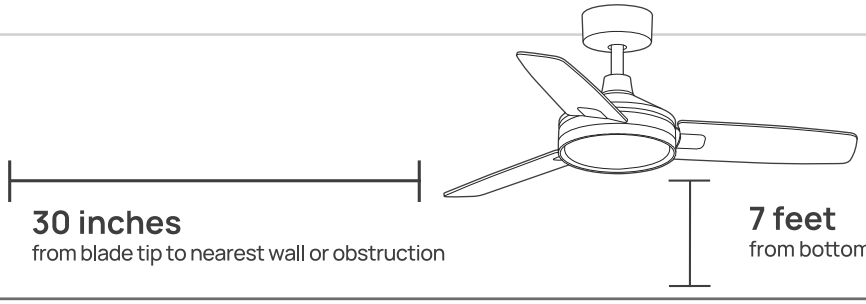

WARNING: Fan Fall Hazard. Check the room ceiling angle to prevent SEVERE PERSONAL INJURY OR DEATH.

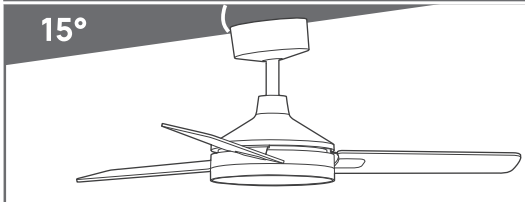

Make sure your room ceiling angle is less than 15°

It is recommended to have a partner when installing the ceiling fan.

ASSEMBLING THE CEILING BRACKET

04

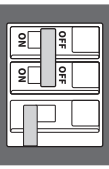

⚠WARNING:
To avoid possible electrical shock, before installing your ceiling fan, disconnect the power by turning off the circuit breakers to the outlet box associated with the wall switch location. If you are unfamiliar or uncomfortable with wiring, contact a qualified electrician.

What You'll Need

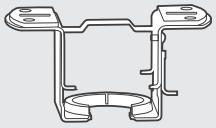
Ceiling Bracket


Wood Screws X 2
(Only for Option 2)


Washer X 2
(Only for Option 2)

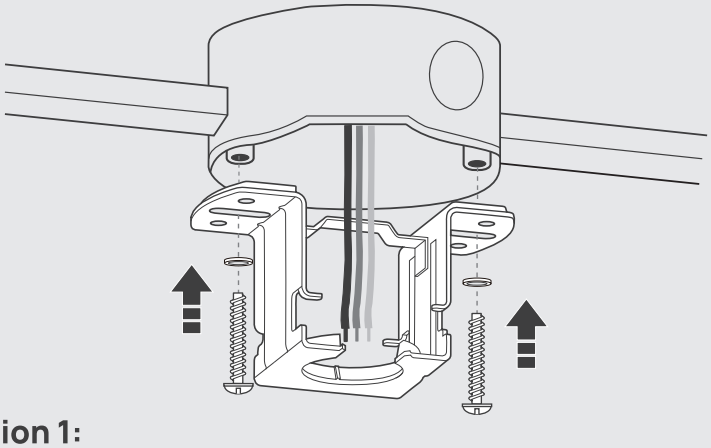

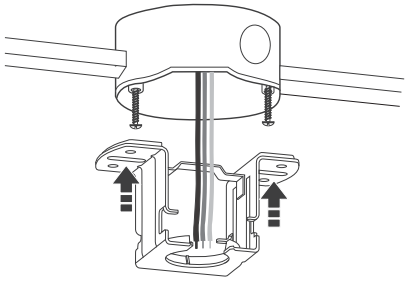

Note: Machine screws are **not included** in the shipped package, they are typically provided with your outlet box.

Option 1:

Use machine screws (provided with outlet box) when:
Securing to existing ceiling fan-rated outlet box.
Make sure it is securely installed and is acceptable for fan support of 15.9 kg (35 lbs) or less.

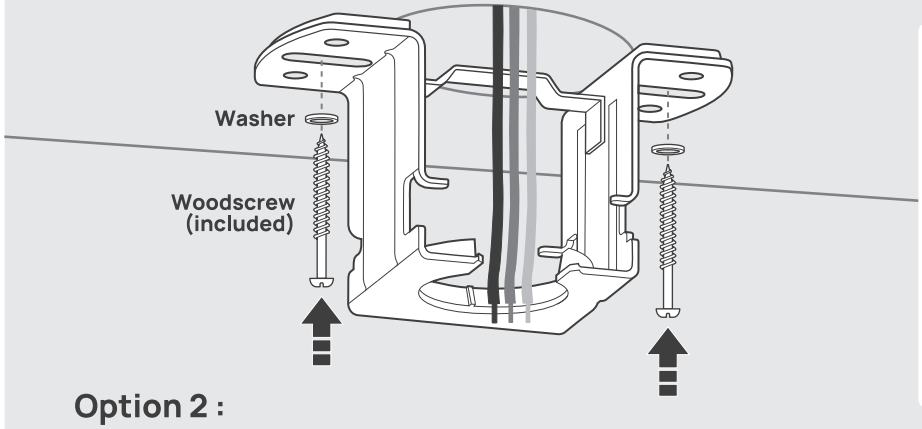

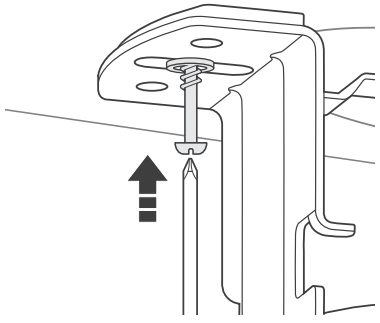

Option 2 :

Use wood screws and washers when:
Securing to support structure with approved electrical outlet box.
Drill 9/64" pilot holes in Support Structure to aid in securing ceiling bracket.

ASSEMBLING THE BLADES 05

What You'll Need



Screw X 9+2(extra)

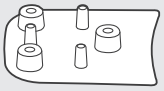

Blade Arm Covers X 3



Blades X 3

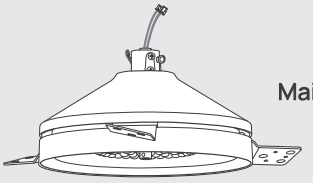

Main Unit

1

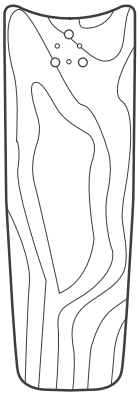

Or

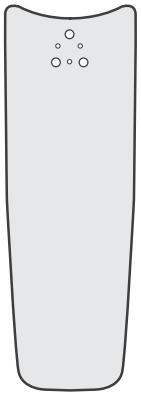

You have the freedom to select either the front or back side according to your preference.

Note: For better performance, utilize the fan blades consistently, whether using the front or reverse side.

2

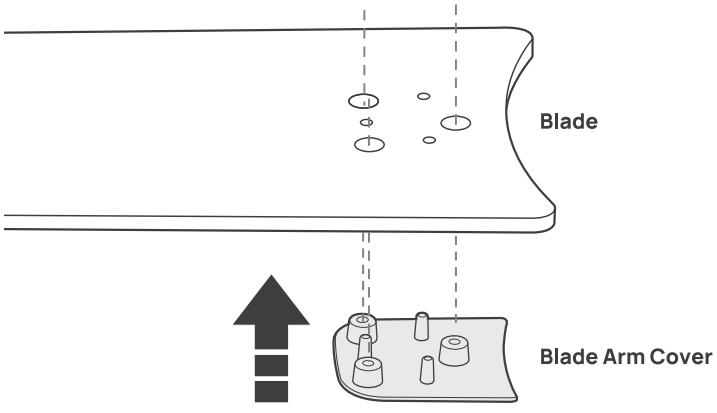

Attach the blade arm cover to the blade.
Make sure the cover goes underneath the blade side that will face the floor.

3

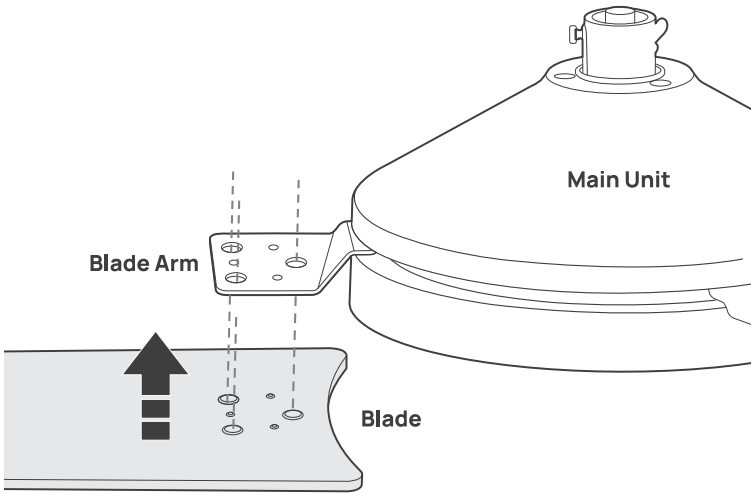

Bring the blade with the attached cover to the blade arm leaving the screw holes facing the blade arm.

4

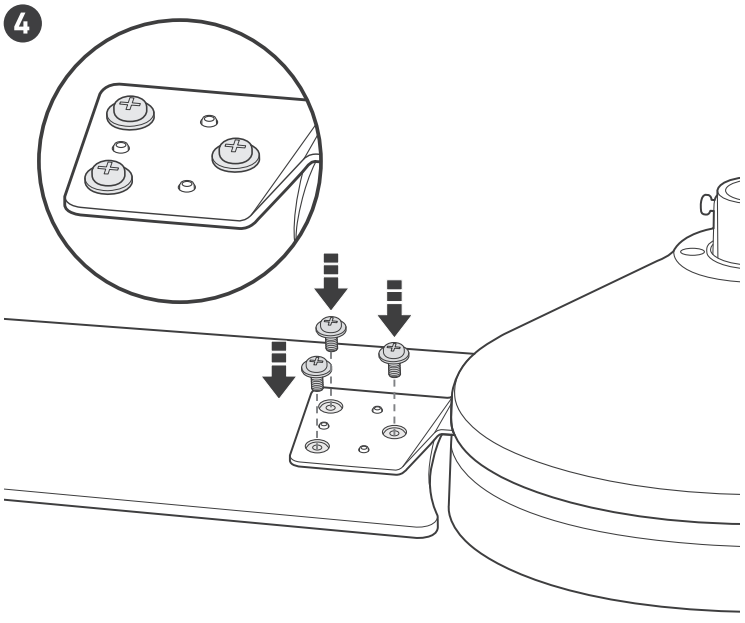

Insert the screws into the blade holes.
Use a screwdriver to securely tighten them.

5 Follow the above three steps to complete the assembly of the remaining two blades.

NOTE: Follow the instructions on the manual carefully. Incorrect installation could result in the fan not functioning properly.

ASSEMBLING THE DOWNROD 06

What You'll Need


Downrod

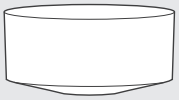
Canopy


Yoke Cover

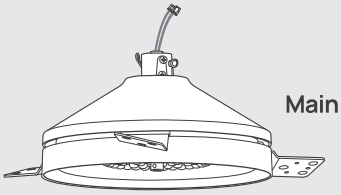
Main Unit

1

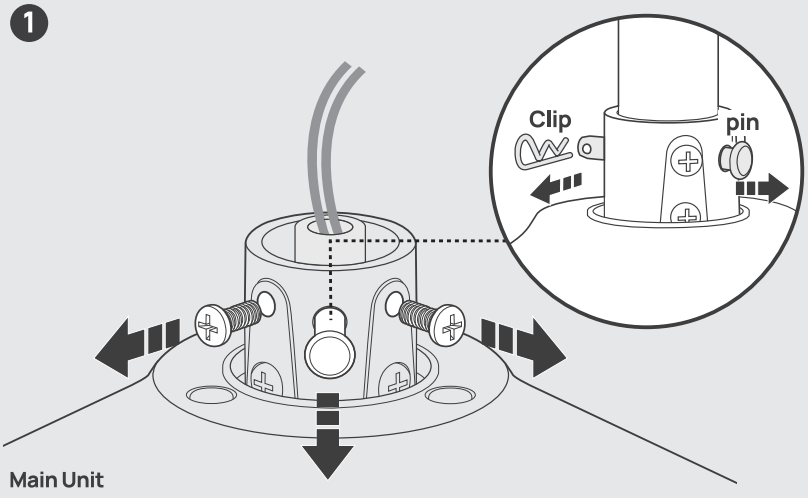

Remove the pre-installed setscrews, downrod pin and clip of the **main unit.**

2

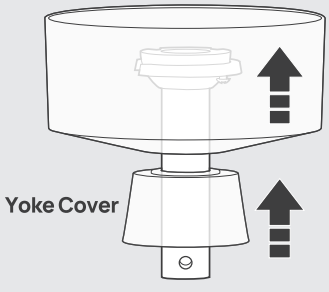

Insert the canopy and then the yoke cover to the downrod.

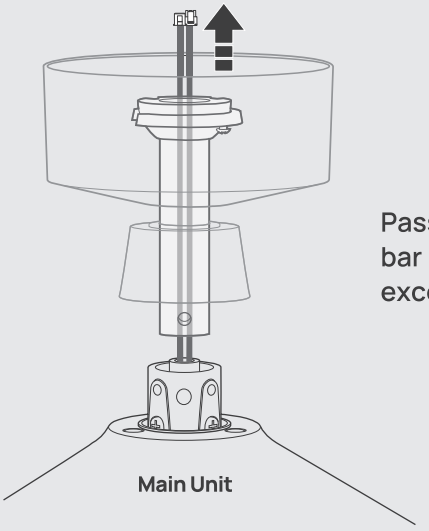

Pass all the wires to the horizontal bar in the downrod to prevent excessive wire tangling.

3

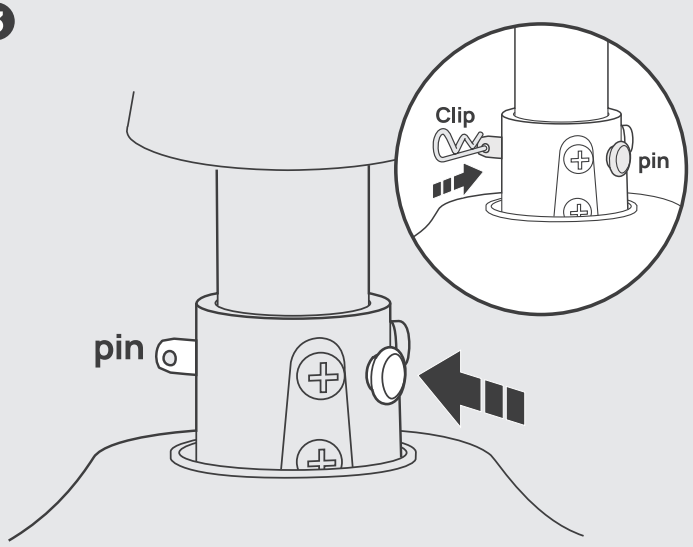

Carefully slide the downrod into the yoke of the motor assembly.

Lift the canopy and yoke cover.

Align the holes in the downrod.

Carefully re-install the downrod pin and clip.

4

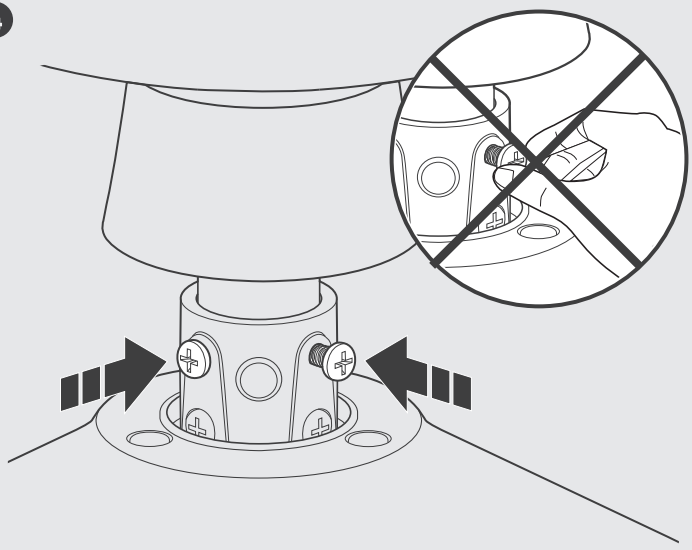

Tighten the setscrew with a **screwdriver.**

WARNING: Fan Fall Hazard.

To prevent SERIOUS INJURY or DEATH:
- ALWAYS tighten setscrew with screwdrivers.
- DO NOT hand tighten setscrew.
- CHECK the setscrew is tight using screwdrivers each time you change fan direction.

5

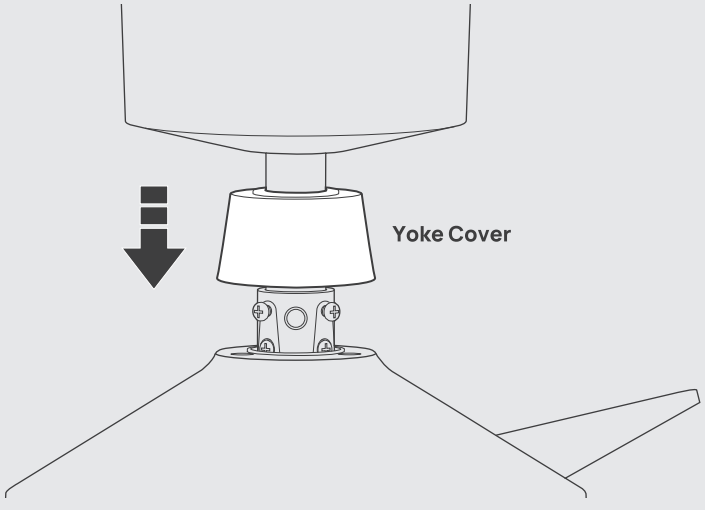

Pull down the yoke cover.

HANGING AND CONNECTING YOUR CEILING FAN

07

WARNING:
Electrical Shock Hazard. Risks of SEVERE PERSONAL INJURY OR DEATH.
Contact a qualified electrician if you are unfamiliar or uncomfortable with wiring!

What You'll Need


Cable Tie


Wire Connector Cap X 3+1(extra)

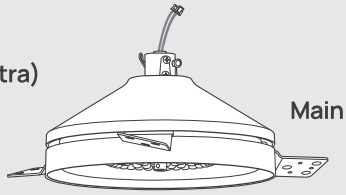
Main Unit

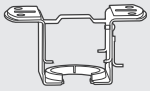
Ceiling Bracket


Remote Receiver

1

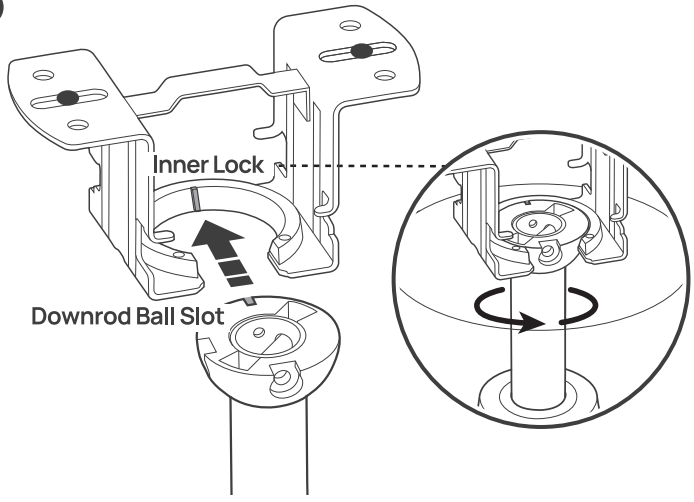

Place the downrod ball into the ceiling bracket.

Make sure the downrod ball slot matches the inner lock.

Rotate the downrod until it's secured.

2

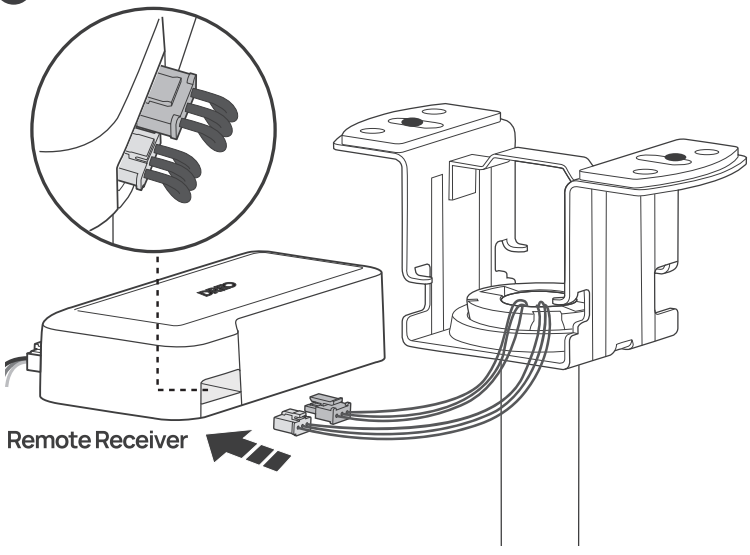

Connect the remote receiver to the main unit by matching corresponding plug colors.

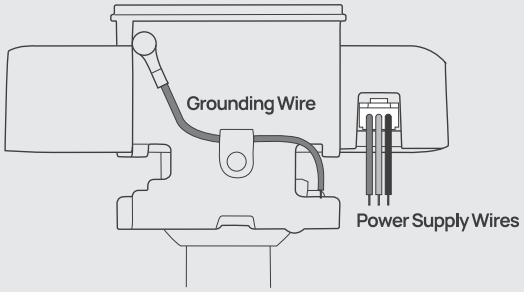

WARNING: Electrical Shock Hazard.
To prevent loosening of cords and cables due to entanglement: Make sure the grounding wire and power supply connection wires are on the same side.

3

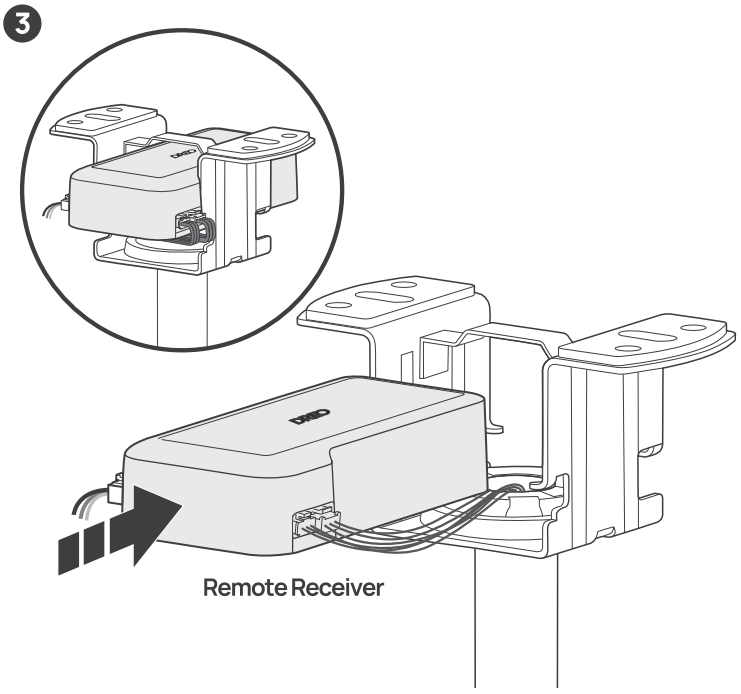

Install the remote receiver on the space in between the ceiling bracket anchors.

4

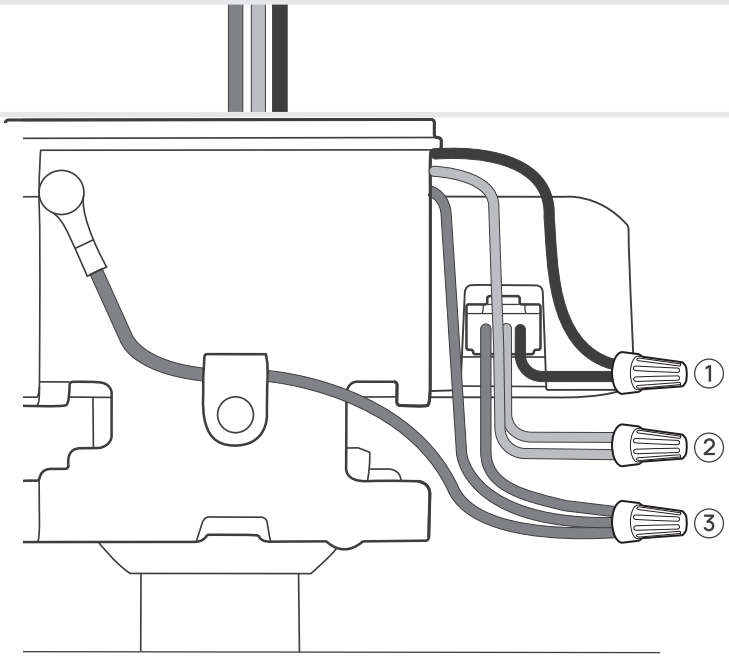

AC IN L	Black
AC IN N	White
⏚	Green, Green/Yellow Stripe, Bare Copper

1. Connect the **two black (ungrounded) wires** from the ceiling and the remote receiver together.
2. Connect the **two white (grounded) wires** from the ceiling and the remote receiver together.
3. Connect the **three grounding wires (green, green/yellow stripe, or bare copper)** from the ceiling, the ceiling bracket, and the remote receiver together.

WARNING: Electrical Shock Hazard.
To prevent SEVERE PERSONAL INJURY OR DEATH:
- Wires MUST be connected as shown in the image above.
- All wiring MUST be in accordance with national and local electrical codes ANSI/NFPA 70. Contact a qualified electrician if you are unfamiliar with wiring or in doubt.

5

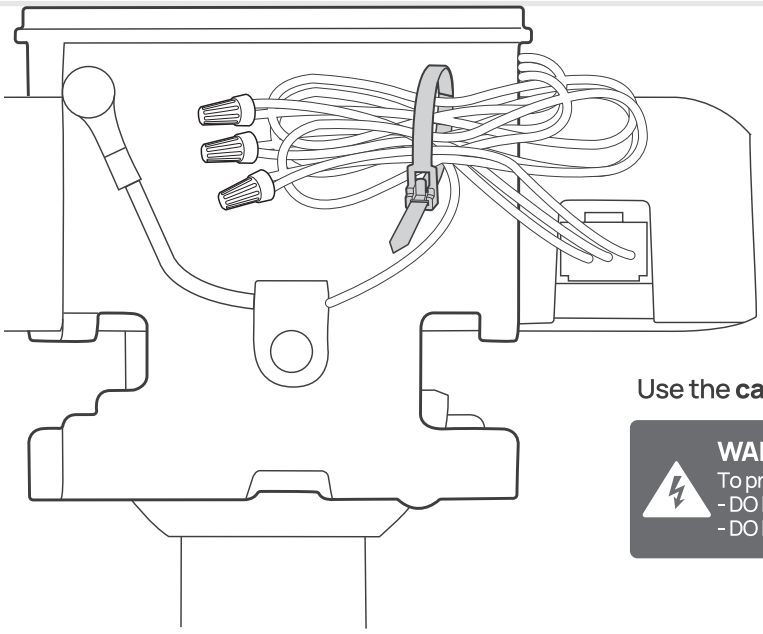

Use the **cable tie** to bundle all the wires together.

WARNING: Electrical Shock Hazard.
To prevent SEVERE PERSONAL INJURY OR DEATH:
- DO NOT leave cables exposed.
- DO NOT let exposed cables be in contact with the downrod.

6

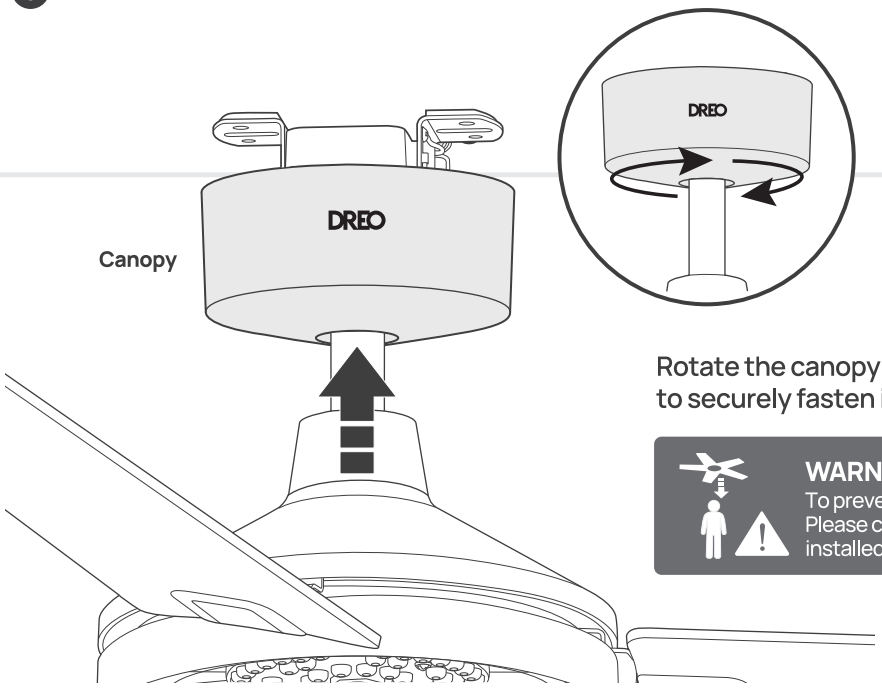

Rotate the canopy clockwise (from your bottom view) to securely fasten it to the ceiling bracket.

WARNING: Fan Fall Hazard.
To prevent SEVERE PERSONAL INJURY OR DEATH:
Please check if the ceiling fan has been properly installed before use.

ASSEMBLING THE LIGHT COVER 08

What You'll Need

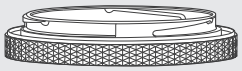

Light Cover

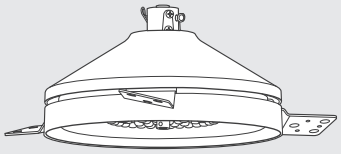

Main Unit

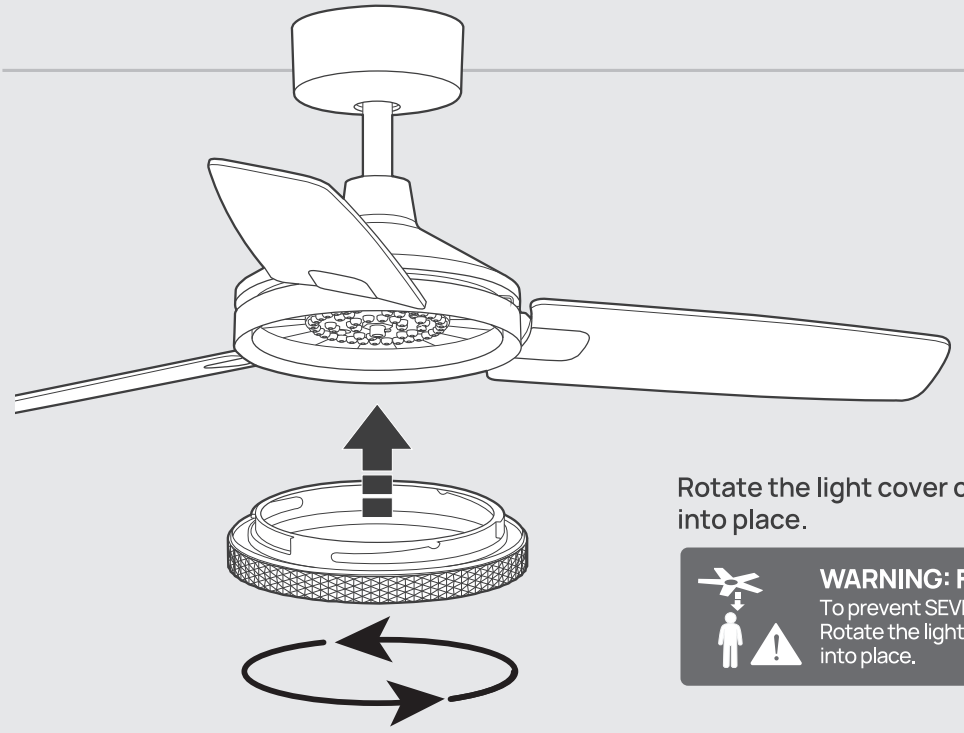

Rotate the light cover clockwise to securely fasten it into place.

WARNING: Fan Fall Hazard.
To prevent SEVERE PERSONAL INJURY OR DEATH:
Rotate the light cover clockwise to securely fasten it into place.

Excess Accessories:

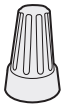

Wire Connector Cap X 1



Screw X 2

Keepable Accessories:

See the attached instruction leaflet for specific usage.



Balancing Weight X 2



Balancing Clip X 1

Congratulations!
You are ready to use your ceiling fan

USING YOUR CEILING FAN

09

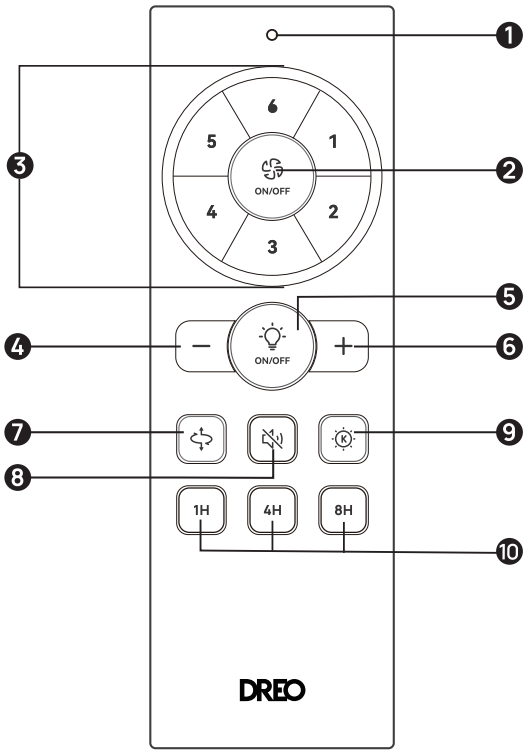

1. Command Indicator
2. Fan Power Button (On/Off)
3. Fan Speed Settings (1 to 6)
4. Decrease Brightness Button
5. Light Power Button (On/Off)
6. Increase Brightness Button
7. Airflow Direction Button
8. Mute Button
9. Light Temperature Button
10. Quick Timer Settings(1H - 4H - 8H)

5 + 9
WiFi Connection/Disconnection
(Long press 3 Seconds)
Touch 8H repeatedly 5 times to restore factory settings.

Note:
When the remote control battery is low, the command indicator light will flash for a few seconds.

Remote Control Pairing

The remote control that shipped with your fan is already paired.
Note: When pairing a new remote control, you MUST disconnect power (at the wall switch, breaker, or fan from other ceiling fans within range) to prevent faulty operation.

Pairing a new remote control to an existing fan

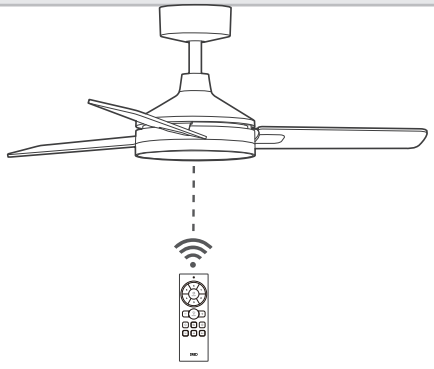

If you lose your remote control or purchase a new one, please follow the steps below to pair the control to your ceiling fan.

- Power cycle the fan by toggling the wall switch (or circuit breaker if needed). Within three minutes, long press the Light Power Button and the Fan Power Button on your remote for 3 seconds to pair it.
- If applicable, the fan will turn on the the lights will flash and stay on for three seconds, along with a continuous beep to indicate successful pairing.

Installing one fan operating on multiple remote controls

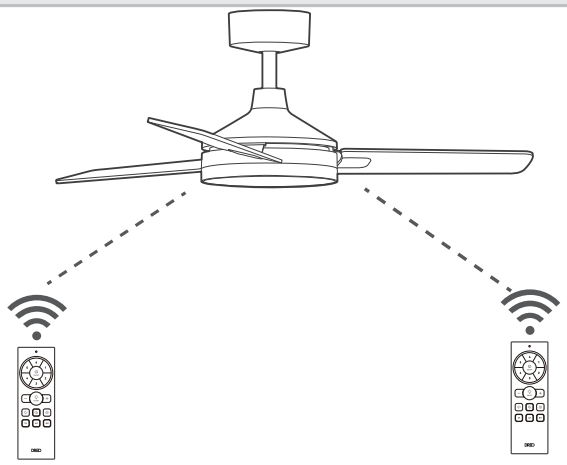

To have multiple remote controls operate one fan, you must pair each additional control to the receiver in the fan. The remote control that shipped with your fan is already paired.

- For each additional control, power cycle the fan by toggling the wall switch (or circuit breaker if needed). Within three minutes, long press the Light Power Button and the Fan Power Button on your remote for 3 seconds to pair it.
- If applicable, the fan will turn on and the lights will flash and stay on for three seconds, along with a continuous beep to indicate successful pairing.

Installing multiple fans operating on a single remote control

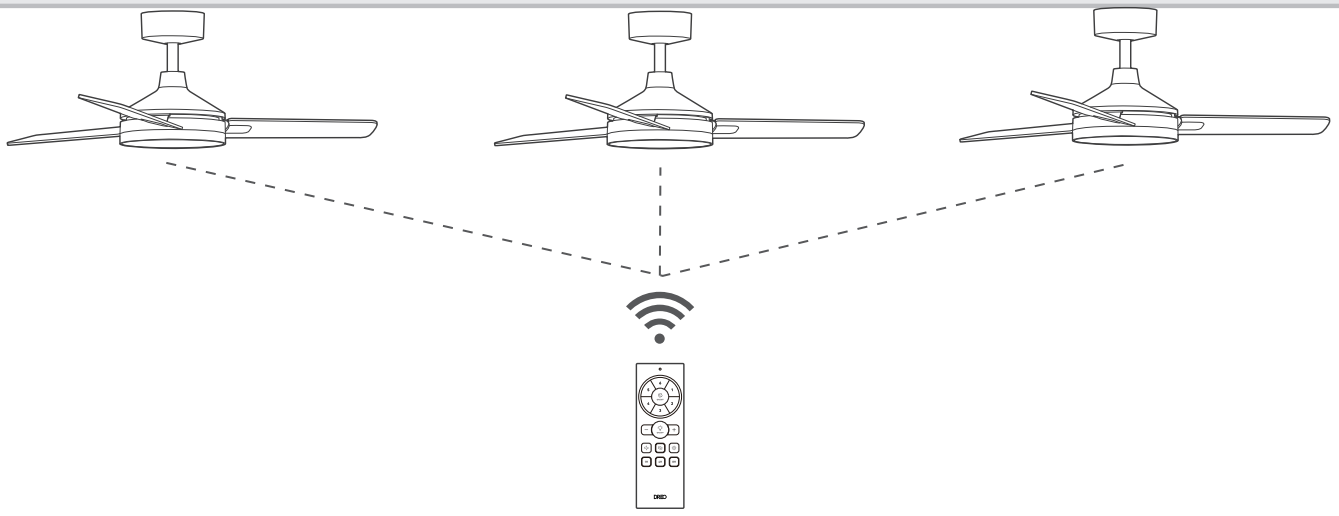

To have multiple fans operated by a single remote control, you must pair the remote control to each additional receiver. The receiver that shipped with your fan is already paired to the remote control.

- For each additional fan, ensure that a compatible receiver is installed. Disconnect power from all other fans while pairing.
- Power cycle the fan by toggling the wall switch (or circuit breaker if needed). Within three minutes, long press the Light Power Button and the Fan Power Button on your remote for 3 seconds to pair it.
- If applicable, the fan will turn on and the lights will flash and stay on for three seconds, along with a continuous beep to indicate successful pairing.

Battery Replacement

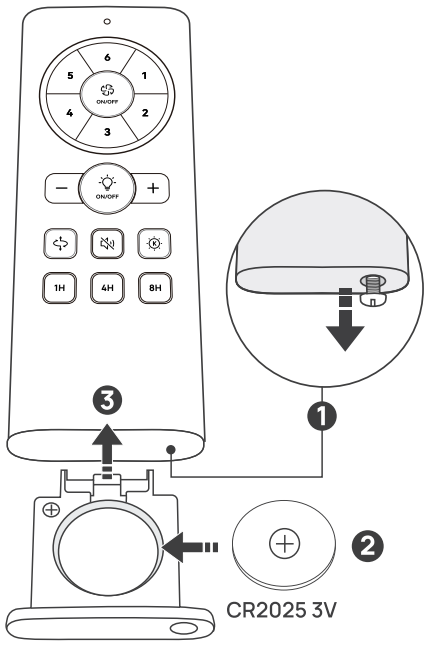

1.Unscrew the locking button with a Phillips screwdriver to remove the battery holder.
2.Replace with the same battery type with the (+) side facing up.
3.Push the holder in and tighten the screw until it is securely locked into place.

Note: If the indicator on the remote control doesn't turn on anymore, please consider replacing the battery.

⚠ WARNING

- **INGESTION HAZARD:** This product contains a button cell or coin battery.
- **DEATH** or serious injury can occur if ingested.
- A swallowed button cell or coin battery can cause **Internal Chemical Burns** in as little as **2 hours.**
- **KEEP** new and used batteries **OUT OF REACH of CHILDREN**
- **Seek immediate medical attention** if a battery is suspected to be swallowed or inserted inside any part of the body.



a) Remove and immediately recycle or dispose of used batteries according to local regulations and keep away from children. Do NOT dispose of batteries in household trash or incinerate.
b) Even used batteries may cause severe injury or death.
c) Call a local poison control center for treatment information.
d) Compatible battery type: CR2025.
e) Battery nominal voltage:3.0 Vdc
f) Non-rechargeable batteries are not to be recharged.
g) Do not force discharge, recharge, disassemble, heat above (rated temperature: 140 °F) or incinerate. Doing so may result in injury due to venting, leakage or explosion resulting in chemical burns.
h) Ensure the batteries are installed correctly according to polarity (+ and -).
i) Do not mix old and new batteries, different brands or types of batteries, such as alkaline, carbon-zinc, or rechargeable batteries.
j) Remove and immediately recycle or dispose of batteries from equipment not used for an extended period of time according to local regulations.
k) Always completely secure the battery compartment. If the battery compartment does not close securely, stop using the product, remove the batteries, and keep them away from children.

Install the Remote Control Holder



3M Glue X 1



Wall-mounted Screw X 2



Remote Control Holder



Remote Control (Battery Included)

Option 1:

1 Peel off the 3M glue on the back of the holder to adhere it to the desired location.

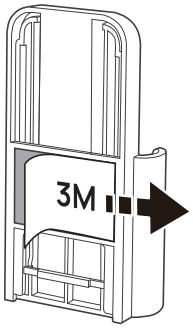

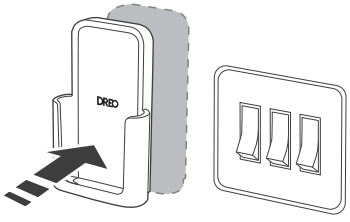

2 Store your remote control.

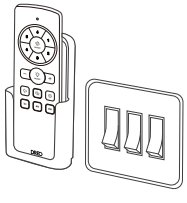

Option 2:

1 Slide the backboard downward to remove it.

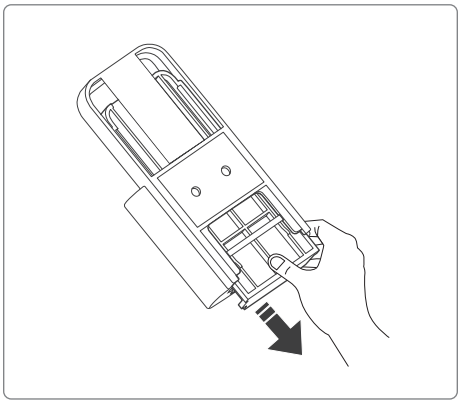

2 Use the two holes on the holder as a guide to drill two corresponding holes in the flat wall.

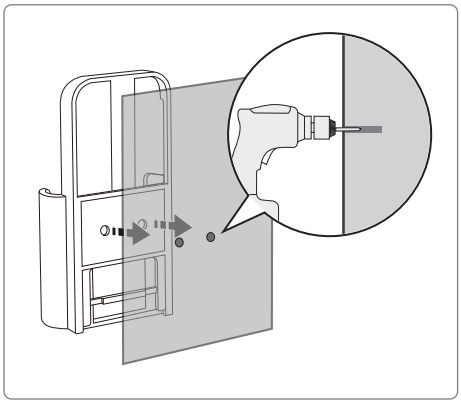

3 Align the two holes on the holder with the two holes on the wall.

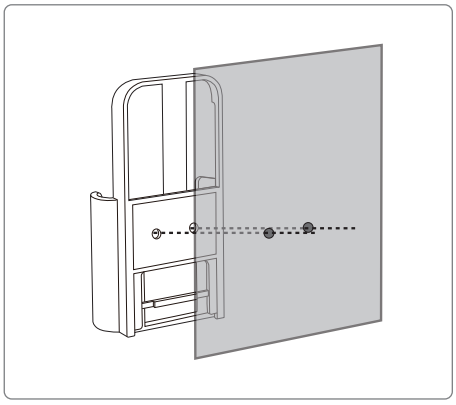

4 Insert the two screws into the holes and tighten them using a screwdriver.

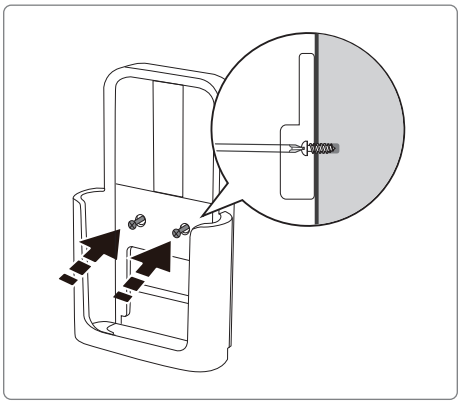

5 Slide the backboard upward to reposition it.

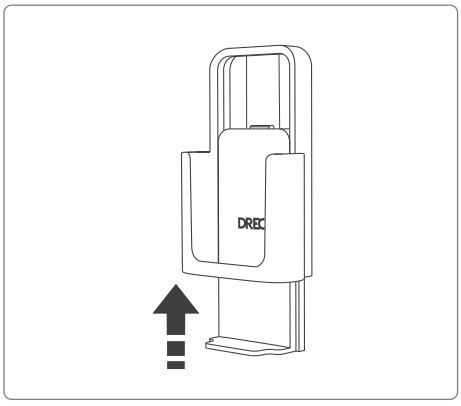

6 Store your remote control.

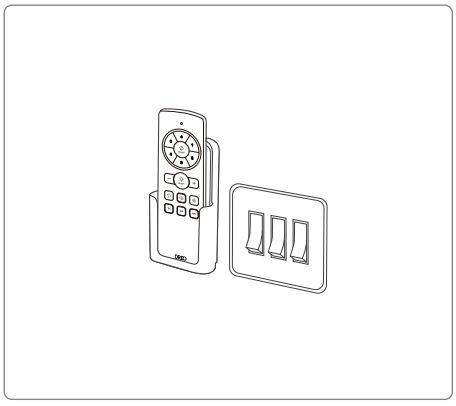

Additional Features

Memory

If the fan is turned OFF or disconnected from power, it will operate under the previous settings (except the timer setting) when it is turned ON again.

Timer

When the ceiling fan is ON/OFF, touch the timer button 1H 4H 8H on the remote control to set a timer(1H, 4H, 8H).
When the timer ends, the ceiling fan will stop/start running automatically.

Mute

Press the mute button on the remote control to turn on/off button sounds.

Soft Light Mode

Long press the light temperature button for 3s seconds.

CONNECTING TO YOUR CEILING FAN

10

This device includes the radio transmitting module whose CMIIT ID is FCC ID: 2A3SYCF005S.

Before connecting the appliance to your mobile device, please scan the QR code on the left or go to the app store and search **"DREO"**, then select and download the app.

Download on the App Store

GET IT ON Google Play

Look for " CLF 325S" when connecting your new ceiling fan.

You can use the DREO app to connect your ceiling fan to **Amazon Alexa** or **Google Home**. Please follow the in-app instructions to set up your voice assistant.
NOTE: You must create a DREO account to access voice assistants.



Launch DREO and sign in or create an account by following in-app instructions. 1

2 **Enable Bluetooth on your mobile device and plug in your ceiling fan.**



Hold the light power button and color temperature button on remote control for 3 seconds to start WiFi connection.
(The ceiling fan light will dim intermittently during the pairing process.) 3

4 **Tap + Add Device and select CLF 325S.**



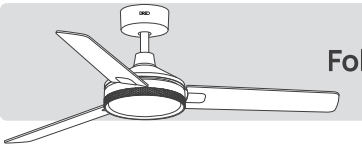

Follow in-app instructions to complete WiFi connection. 5

6 **You're now ready to control the appliance on your app.**

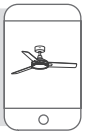

To restart network setup, hold the light power button and color temperature button again for 3 seconds.

CLEANING AND MAINTENANCE 11

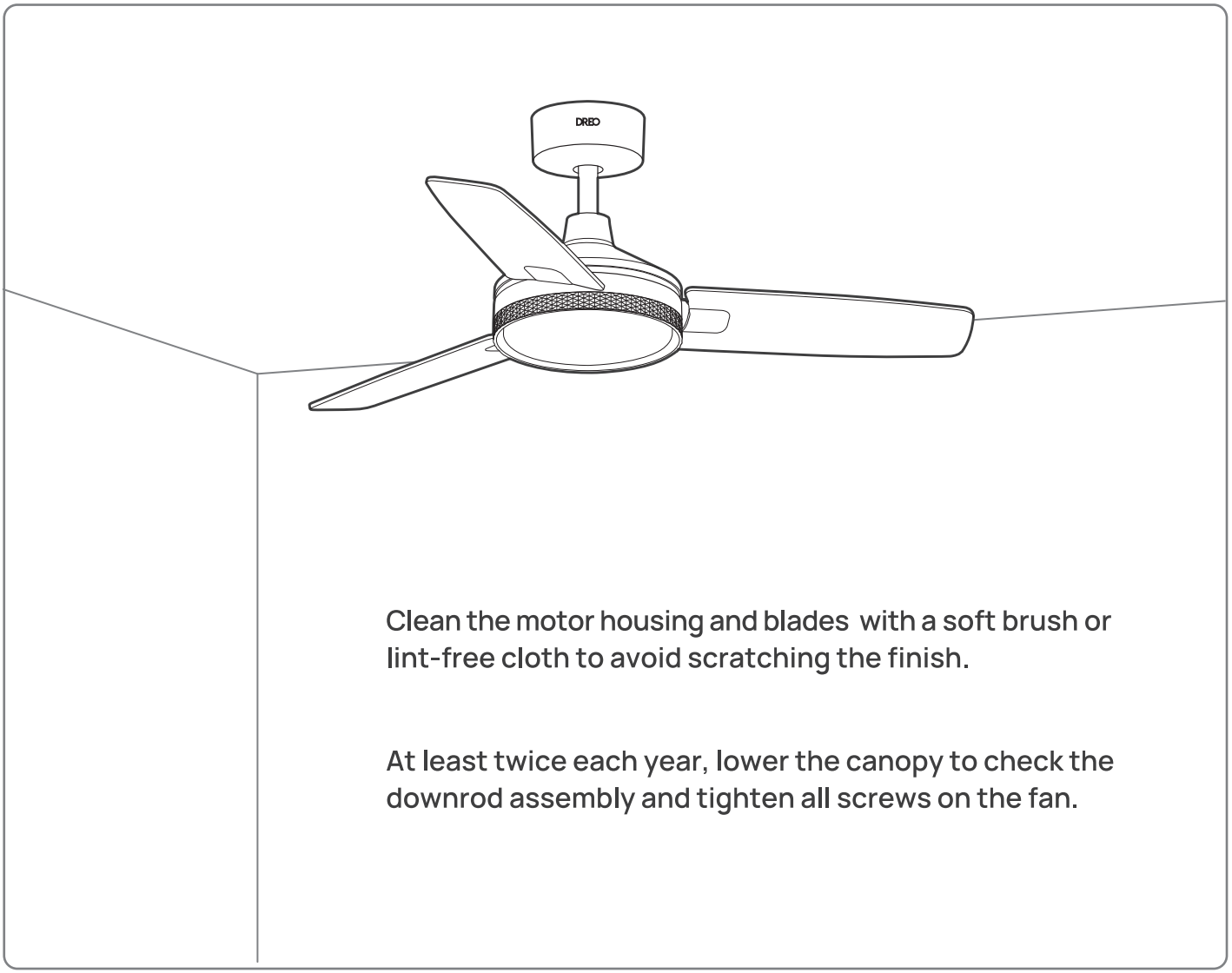

Clean the motor housing and blades with a soft brush or lint-free cloth to avoid scratching the finish.

At least twice each year, lower the canopy to check the downrod assembly and tighten all screws on the fan.

- Shut off the main power supply before you begin any maintenance task.
- **DO NOT** use water or a damp cloth to clean the fan.
- Cleaning products may damage the finishes.

TROUBLESHOOTING 12

Problem	Solution
Fan Doesn't Work	• Make sure the power switch is on. • Check the circuit breaker to ensure the power is turned on. • Make sure the blades spin freely. • Turn off power from the circuit breaker, then loosen the canopy and check all the connections according to the wiring diagram. • Check that the remote receiver wiring sequence is correct and properly connected.
Excessive Wobbling	• Make sure the blades are properly installed on the blade iron posts. • Turn the power off, support the fan carefully, and check that the hanger ball is properly seated.
Remote Control of Fan is Erratic	• Make sure the battery is installed correctly. If the command indicator light keeps flashing, indicating low battery, install a fresh battery.
Remote Only Works Close to Fan	• Change battery
Noisy Operation	• Make sure the blades are properly installed. • Check to see if any of the blades are cracked. If so, replace all of the blades.

If you find any damaged or missing parts upon receiving the package or during installation, or if your issue is not listed above or continues to persist, please contact our Customer Support immediately. (see page 20)

DREO CUSTOMER CARE 13

12-MONTH LIMITED WARRANTY

What is Covered

DREO warrants to you that your product will be free from original defects in materials and workmanship for a period of twelve (12) months from the date of your purchase, when you use your product for intended purposes in accordance with this User Manual.

Please retain your proof of purchase. If you do not retain your proof of purchase, your warranty will start two (2) months from the date of manufacture printed on your product label.

What is Not Covered

This limited warranty only applies to the original purchaser of your product and is non-transferable. This warranty is only valid if your product is used in the country in which you originally purchased it. In addition, this warranty will not apply, and DREO will not be liable for any costs, damages, or repairs, in connection with any of the following:

- Accidents or use of your product with inappropriate force;
- Damage or destruction caused by wrong voltage or unstable electric current;
- Normal wear and tear;
- Careless operation or handling, misuse, abuse, neglect, and/or failure to maintain or use your product in accordance with this User Manual;
- Any partially or completely altered, modified and/or dismantled products;
- Reduction in battery discharge time due to battery age or use (as applicable);
- Products with altered or removed serial numbers;
- Clearing any blockages from the product;
- Purchases from retailers and distributors not authorized by DREO to sell this product;
- Defects caused by or resulting from damages from shipping or handling by any third party not authorized by DREO to ship or handle your product; or
- Defects caused by or resulting from repairs, service, improper maintenance, or alteration to your product or any of its components by anyone other than a repair person authorized by DREO.

Any service and customer support that DREO provides to you under this limited warranty will not extend the duration of this limited warranty.

Warranty Limitations and Exclusions

ANY IMPLIED WARRANTIES RELATING TO YOUR PRODUCT, INCLUDING BUT NOT LIMITED TO THE WARRANTY OF MERCHANTABILITY AND THE WARRANTY OF FITNESS FOR A PARTICULAR PURPOSE, ARE LIMITED TO THE DURATION OF THE LIMITED WARRANTY SET FORTH ABOVE AND ARE OTHERWISE DISCLAIMED.

THIS LIMITED WARRANTY SHALL BE THE SOLE REMEDY OF THE PURCHASER OR USER OF THE PRODUCT, AND DREO SHALL NOT BE LIABLE FOR AN ALLEGEDLY DEFECTIVE OR DAMAGED PRODUCT EXCEPT TO REPAIR OR REPLACE IT IN ACCORDANCE WITH THIS LIMITED WARRANTY. DREO WILL NOT BE LIABLE FOR SPECIAL, INCIDENTAL, INDIRECT, CONTINGENT, OR CONSEQUENTIAL DAMAGES OR LOSSES OF ANY NATURE THAT YOU MAY INCUR IN CONNECTION WITH YOUR PURCHASE OR USE OF YOUR PRODUCT.

Some jurisdictions do not allow limitations on how long an implied warranty lasts or the exclusion or limitation of incidental or consequential damages, so the above limitations or exclusions may not apply to you. This limited warranty gives you specific legal rights, and you also may have other rights which vary from jurisdiction to jurisdiction.

Limited Remedies

If your product fails because of an original defect in material and/or workmanship during the warranty period, DREO will repair or replace (in DREO's sole discretion) your product.

To obtain warranty service on your product, contact us at support@dreo.com or at (888) 290-1688 (available from Monday - Friday, 9:00 AM - 5:00 PM PST/PDT) for further instructions.

IN THE EVENT OF AN ORIGINAL DEFECT IN MATERIAL AND/OR WORKMANSHIP, TO THE EXTENT PERMITTED BY LAW, THE REMEDIES SET FORTH IMMEDIATELY ABOVE ARE YOUR SOLE AND EXCLUSIVE REMEDIES.

FCC STATEMENT

This device complies with Part 15 of the FCC Rules.
This equipment has been tested and found to comply with the limits for a Class B digital device, pursuant to Part 15 of the FCC Rules. These limits are designed to provide reasonable protection against harmful interference in a residential installation.This equipment generates, uses and can radiate radio frequency energy and, if not installed and used in accordance with the instructions, may cause harmful interference to radio communications. However, there is no guarantee that interference will not occur in a particular installation. Please note that changes or modifications of this product is not expressly approved by the party responsible for compliance could void the user's authority to operate the equipment. If this equipment does cause harmful interference to radio or television reception, which can be determined by turning the equipment off and on, the user is encouraged to try to correct the interference by one or more of the following measures:

-Reorient or relocate the receiving antenna.
-Increase the separation between the equipment and receiver.
-Connect the equipment into an outlet on a circuit different from that to which the receiver is connected.
-Consult the dealer or an experienced radio/TV technician for help.

This equipment complies with FCC radiation exposure limits set forth for an uncontrolled environment. This equipment should be installed and operated with a minimum distance of 20cm between the radiator & your body. This transmitter must not be co-located or operating in conjunction with any other antenna or transmitter.

Model No.: DR-HCF005S
Rev_1.1_EN

We're Here to Help!

(888) 290-1688 Mon - Fri, 9:00 am-5:00 pm PST/PDT
support@dreo.com
www.dreo.com
Shenzhen Hesung Innovation Technology Co., LTD
26F, Bldg A7, Creative City, Shenzhen, China

MADE IN CHINA

www.dreo.com

Looking for help?

Contact us to get expert support.

support@dreo.com (888) 290-1688 www.dreo.com

Mon - Fri, 9:00 am-5:00 pm PST/PDT