Form No. 3444-892 Rev A

TORO®

Count on it.

Operator's Manual

Snow Thrower

Tracked Compact Tool Carriers and TXL 2000 Tool Carrier

Model No. 22583—Serial No. 320000001 and Up

Model No. 22585—Serial No. 320000001 and Up

Register at www.Toro.com.

Original Instructions (EN)

3444-892

⚠ WARNING

CALIFORNIA
Proposition 65 Warning

Use of this product may cause exposure to chemicals known to the State of California to cause cancer, birth defects, or other reproductive harm.

Introduction

This snow thrower is intended to be used on a Toro tool carrier or compact tool carrier. It is designed primarily for removing snow from paved surfaces, such as driveways and sidewalks, and other surfaces for traffic on residential or commercial properties. It is not designed for removing materials other than snow, nor is it a model with a pivoting scraper designed for clearing off gravel surfaces. It is not designed for use on non-Toro traction units.

Read this information carefully to learn how to operate and maintain your product properly and to avoid injury and product damage. You are responsible for operating the product properly and safely.

Visit www.Toro.com for product safety and operation training materials, accessory information, help finding a dealer, or to register your product.

Whenever you need service, genuine Toro parts, or additional information, contact an Authorized Service Dealer or Toro Customer Service and have the model and serial numbers of your product ready. The model and serial numbers are printed on a plate located on the right side of the drive head. Write the numbers in the space provided.

Important: **With your mobile device, you can scan the QR code on the serial number decal (if equipped) to access warranty, parts, and other product information.**

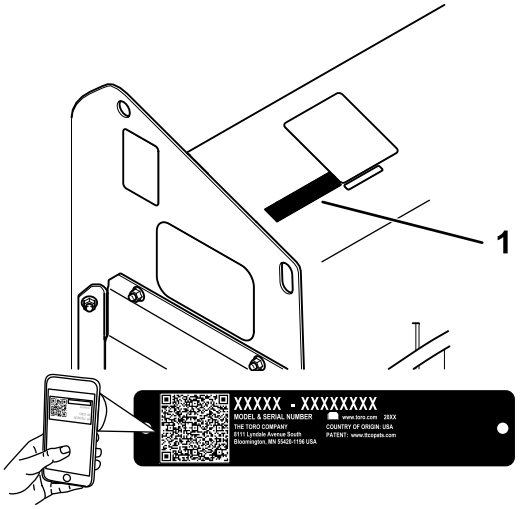

g327524

Figure 1
Model 22585 shown

1. Model and serial number location

Model No. _____

Serial No. _____

This manual identifies potential hazards and has safety messages identified by the safety-alert symbol (Figure 2), which signals a hazard that may cause serious injury or death if you do not follow the recommended precautions.



g000502

Figure 2

1. Safety-alert symbol

This manual uses 2 words to highlight information. **Important** calls attention to special mechanical information and **Note** emphasizes general information worthy of special attention.

© 2021—The Toro® Company
8111 Lyndale Avenue South
Bloomington, MN 55420

Contact us at www.Toro.com.
Printed in the USA
All Rights Reserved

Contents

Safety 3
General Safety 3
Slope Safety 3
Snow Thrower Safety 4
Maintenance and Storage Safety 4
Safety and Instructional Decals 5
Setup 7
1 Installing the Accessory Port 7
2 Install the Attachment 7
3 Installing the Control Box 8
4 Installing the Reflector Decal 9
Product Overview 11
Controls 11
Specifications 11
Attachments/Accessories 12
Operation 12
Installing and Removing the Attachment 12
Adjusting the Skids 13
Operating the Snow Thrower 14
Clearing a Clogged Snow Thrower 14
Transport Position 14
Operating Tips 15
Maintenance 16
Recommended Maintenance Schedule(s) 16
Greasing the Snow Thrower 16
Checking and Replacing the Skids 17
Replacing the Scraper Blade 17
Checking the Hydraulic Lines 18
Storage 18
Troubleshooting 19

Safety

This machine has been designed in accordance with ANSI B71.3-2014.

General Safety

This product is capable of amputating hands and feet and of throwing objects. Always follow all safety instructions to avoid serious injury or death.

- **Do not transport an attachment with the arms raised or extended**; always transport the attachment close to the ground, with the loader arms retracted; refer to Transport Position (page 14).
- Have the property or work area marked for buried lines and other objects, and do not dig in marked areas.
- Read and understand the content of this *Operator's Manual* before starting the engine.
- Use your full attention while operating the machine. Do not engage in any activity that causes distractions; otherwise, injury or property damage may occur.
- Never allow children or untrained people to operate the machine.
- Keep your hands and feet away from the moving components and attachments.
- Do not operate the machine without the guards and other safety protective devices in place and working on the machine.
- Keep bystanders and pets away from the machine.
- Stop the machine, shut off the engine, and remove the key before servicing, fueling, or unclogging the machine.

Improperly using or maintaining this machine can result in injury. To reduce the potential for injury, comply with these safety instructions and always pay attention to the safety-alert symbol ⚠, which means Caution, Warning, or Danger—personal safety instruction. Failure to comply with these instructions may result in personal injury or death.

Slope Safety

- **Operate the machine up and down slopes with the heavy end of the machine uphill.** Weight distribution changes with attachments. This attachment makes the front of machine the heavy end.
- **Keep the attachment in the lowered position with the loader arms retracted when on slopes.** Raising the attachment or extending the loader arms on a slope affects the stability of the machine.

- Slopes are a major factor related to loss of control and tip-over accidents, which can result in severe injury or death. Operating the machine on any slope or uneven terrain requires extra caution.
- Establish your own procedures and rules for operating on slopes. These procedures must include surveying the site to determine which slopes are safe for machine operation. Always use common sense and good judgment when performing this survey.
- Slow down and use extra care on hillsides. Ground conditions can affect the stability of the machine.
- Avoid starting or stopping on a slope. If the machine loses traction, proceed slowly, straight down the slope.
- Avoid turning on slopes. If you must turn, turn slowly and keep the heavy end of the machine uphill.
- Keep all movements on slopes slow and gradual. Do not make sudden changes in speed or direction.
- If you feel uneasy operating the machine on a slope, do not do it.
- Watch for holes, ruts, or bumps, as uneven terrain could overturn the machine. Tall grass can hide obstacles.
- Use caution when operating on wet surfaces. Reduced traction could cause sliding.
- Evaluate the area to ensure that the ground is stable enough to support the machine.
- Use caution when operating the machine near the following:
  - Drop-offs
  - Ditches
  - Embankments
  - Bodies of water

  The machine could suddenly roll over if a track or wheel goes over the edge or the edge caves in. Maintain a safe distance between the machine and any hazard.
- Do not remove or add attachments on a slope.
- Do not park the machine on a hillside or slope.

Snow Thrower Safety

- Shut off the engine before unclogging the machine and always use a stick.
- Thoroughly inspect the area where the machine is to be used and remove all doormats, sleds, boards, wires, and other foreign objects.
- Let the engine and machine adjust to outdoor temperatures before starting to clear the snow.
- Never direct the discharge toward people or areas where property damage can occur.
- Exercise caution to avoid slipping or falling, especially when operating the machine in reverse.
- When not actively clearing snow, disengage power to the auger.
- Keep the area of operation free of all objects that could be picked up and thrown by the auger/impeller.
- Exercise extreme caution when operating the machine on or crossing gravel drives, walks, or roads. Stay alert for hidden hazards or traffic.

Maintenance and Storage Safety

- Check fasteners at frequent intervals for proper tightness to ensure that the equipment is in safe operating condition.
- Refer to the *Operator's Manual* for important details if you store the attachment for an extended period of time
- Maintain or replace safety and instruction labels, as necessary.

Safety and Instructional Decals

Safety decals and instructions are easily visible to the operator and are located near any area of potential danger. Replace any decal that is damaged or missing.

Decal 93-7309 is used on Model 22583 only.

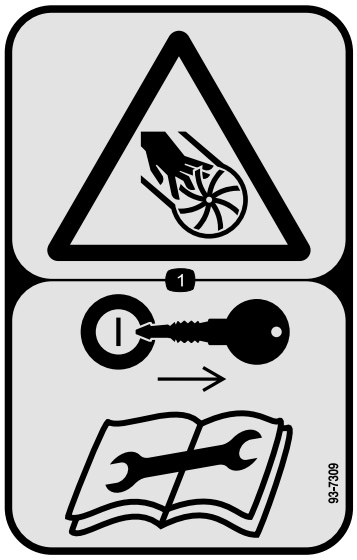

decal93-7309

93-7309

1. Cutting/dismemberment hazard, impeller—remove the key and read the instructions before performing maintenance.



decal133-8061

133-8061



decal139-8896

139-8896

1. Cutting/dismemberment hazard of foot, auger—keep bystanders away.

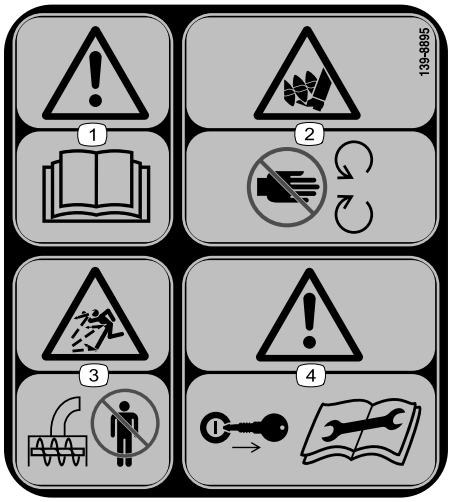

decal139-8895

139-8895

1. Warning—read the *Operator's Manual*.
2. Cutting/dismemberment hazard of foot, auger—stay away from moving parts.
3. Thrown object hazard—keep bystanders away.
4. Warning—remove the key from the ignition before servicing the machine.

Decal 144-1299 is used on Model 22585 only.



decal144-1299

144-1299

1. Cutting/dismemberment hazard of hand; impeller
2. Do not place your hand in the chute.

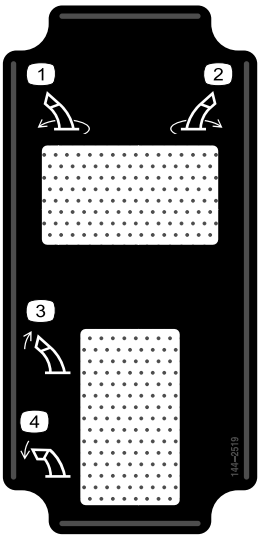

decal144-2519

144-2519

1. Rotate the deflector left.
2. Rotate the deflector right.
3. Raise the deflector chute
4. Lower the deflector chute

Setup

Loose Parts

Use the chart below to verify that all parts have been shipped.

Procedure	Description	Qty.	Use
1	Accessory port kit (sold separately)	1	Install the accessory port.
2	No parts required	–	Install the attachment.
3	No parts required	–	Install the control box.
4	Reflector decal 51 x 76 (2 x 3 inches)—TL 1000, TX427, and TX525 Reflector decal 152 x 38 mm (6 x 1-1/2 inches)—TXL 2000	2 2	Install the reflector decal.

1

Installing the Accessory Port

TX 427 and TX 525 Only

Parts needed for this procedure:

1	Accessory port kit (sold separately)

Procedure

Refer to the *Installation Instructions* for the kit.

2

Install the Attachment

No Parts Required

Procedure

Refer to the *Operator's Manual* for the traction unit for the installation procedure.

Important: **Before installing the attachment, position the machine on a level surface, ensure that the mount plates are free of any dirt or debris, and ensure that the pins rotate freely. If the pins do not rotate freely, grease them.**

Note: Always use the traction unit to lift and move the attachment.

⚠ WARNING

If you do not fully seat the quick-attach pins through the attachment mount plate, the attachment could fall off the machine, crushing you or bystanders.

Ensure that the quick-attach pins are fully seated in the attachment mount plate.

⚠ WARNING

Hydraulic fluid escaping under pressure can penetrate skin and cause injury. Fluid injected into the skin must be surgically removed within a few hours by a doctor familiar with this form of injury; otherwise, gangrene may result.

- **Ensure that all hydraulic-fluid hoses and lines are in good condition and all hydraulic connections and fittings are tight before applying pressure to the hydraulic system.**
- **Keep your body and hands away from pinhole leaks or nozzles that eject high-pressure hydraulic fluid.**
- **Use cardboard or paper to find hydraulic leaks; never use your hands.**

⚠ CAUTION

Hydraulic couplers, hydraulic lines/valves, and hydraulic fluid may be hot. If you contact hot components, you may be burned.

- **Wear gloves when operating the hydraulic couplers.**
- **Allow the machine to cool before touching hydraulic components.**
- **Do not touch hydraulic fluid spills.**

3

Installing the Control Box

No Parts Required

Procedure

1. Route the wire harness from the attachment, along the hydraulic hoses, to the control panel.

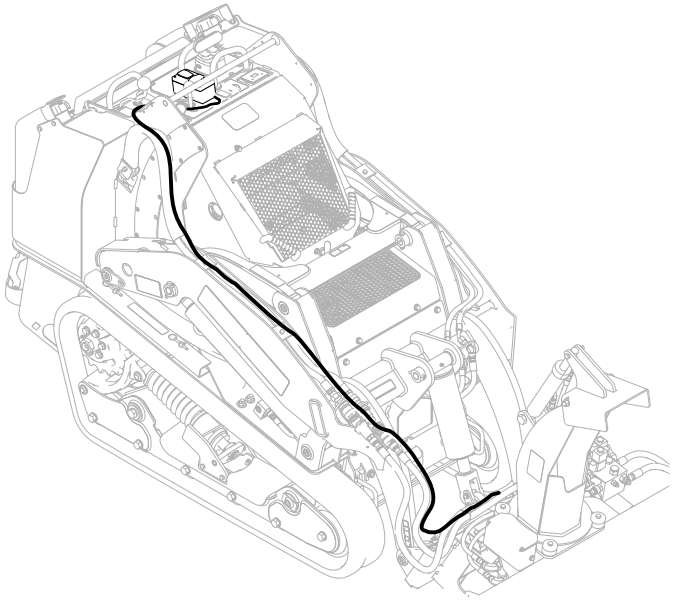

g327731

Figure 3

Compact Tool Carriers (TX 1000 shown)

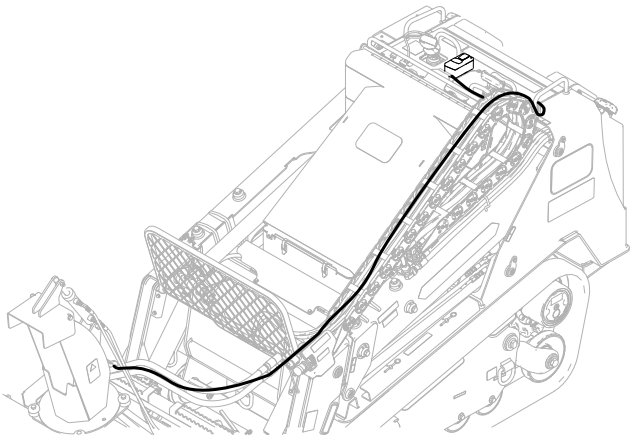

g328045

Figure 4

TXL 2000 with telescoping arms

2. Place the control box on the control panel.

   Note: The magnets under the controller will hold it in place.

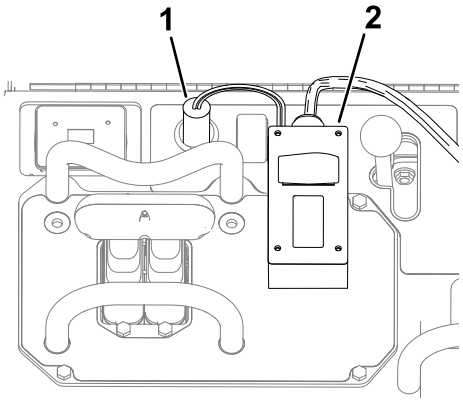

g327887

Figure 5

TX 1000 Shown

1. 12 V plug
2. Control box

3. Plug the wire harness in the 12 V power socket.
4. Secure the wire harness to the hydraulic hoses and secure any excess wire using cable ties.

4

Installing the Reflector Decal

Parts needed for this procedure:

2	Reflector decal 51 x 76 (2 x 3 inches)—TL 1000, TX427, and TX525
2	Reflector decal 152 x 38 mm (6 x 1-1/2 inches)—TXL 2000

Procedure

1. Park the machine in a heated area and allow the steel surfaces at the back of the machine (Figure 8) to warm and condensation to dry.

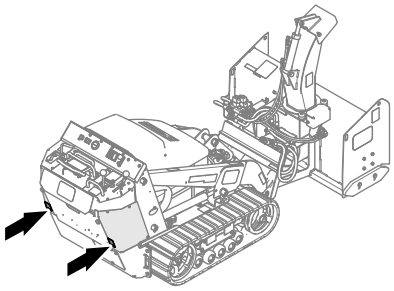

g345324

Figure 6
TX427 and TX525 Machines

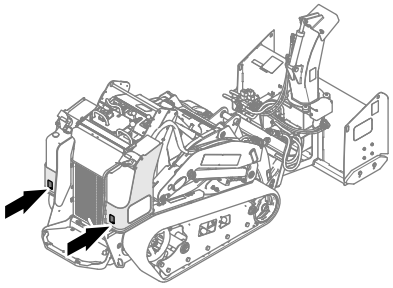

g345322

Figure 7
TX1000 Machines

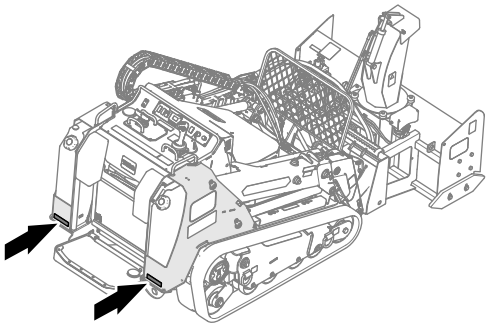

g347057

Figure 8
TXL 2000 Machines

2. Lower the attachments, engage the parking brake, shut off the engine and remove key, and wait for all moving parts to stop.
3. Ensure that the decal mount surface (rear-support cover or tank plate) of the machine is warm and dry (Figure 6, Figure 7, and Figure 8).
4. Use alcohol and a clean rag to wipe clean the mounting surface where you will apply the reflector decal.
5. Use the Decal Table to select the reflective decal for your machine.

Decal Table

Machine Model	Reflector Decal Dimension
TX427	51 x 76 (2 x 3 inches)
TX525	
TX1000	
TXL 2000	152 x 38 mm (6 x 1-1/2 inches)

6. Remove the backing from the reflector decal.
7. Adhere the decal to the mounting surface as shown in Figure 9, Figure 10, or Figure 11.

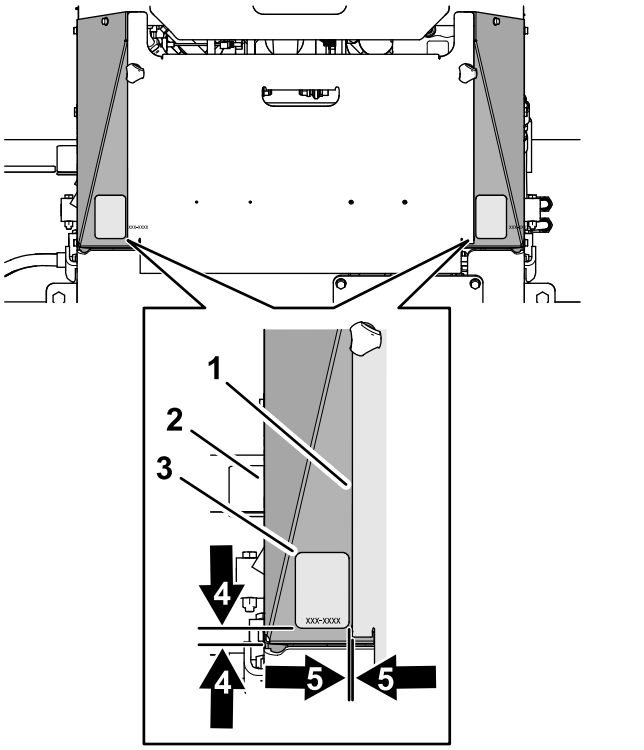

g345323

Figure 9
TX427 and TX525 Machines

1. Rear access cover
2. Rear-support cover
3. Reflector decal 51 x 76 (2 x 3 inches)
4. 10 mm (3/8 inch)
5. 3 mm (1/8 inch)

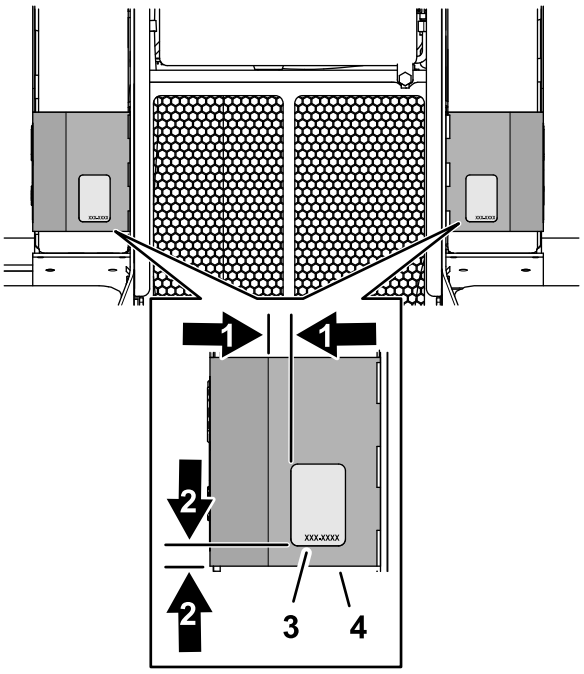

g345321

Figure 10
TX1000 Machines

1. 13 mm (1/2 inch)—Bend radius to tecal
2. 13 mm (1/2 inch)
3. Reflector decal 51 x 76 (2 x 3 inches)
4. Tank plate

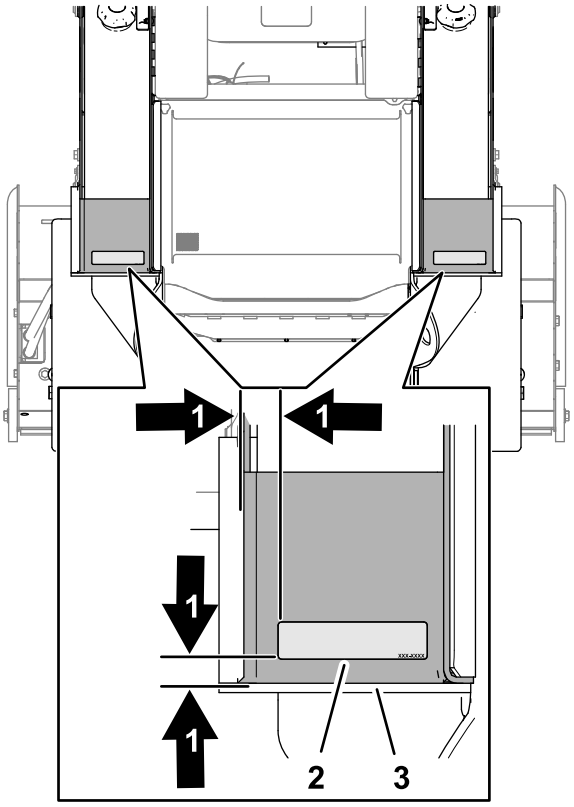

g347111

Figure 11
TXL 2000

1. 25 mm (1 inch)
2. Reflector decal 152 x 38 mm (6 x 1-1/2 inches)
3. Tank plate

8. Repeat steps 4 through 7 at the other side of the machine.

Product Overview

Controls

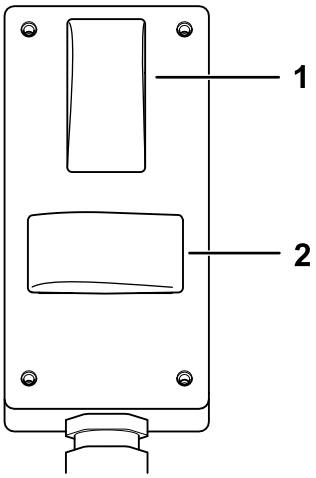

g327582

Figure 12

1. Deflector angle control
2. Chute direction control

Specifications

Note: Specifications and design are subject to change without notice.

Model 22583

Width	163 cm (64 inches)
Clearing width	136 cm (53-1/2 inches)
Length	101 cm (39.8 inches)
Height	148 cm (58.4 inches)
Weight	422 kg (930 lb)

Model 22585

Width	123 cm (48-1/2 inches)
Clearing width	113 cm (44-1/2 inches)
Length	94 cm (37 inches)
Height	137 cm (54 inches)
Weight	276 kg (609 lb)

Attachments/Accessories

A selection of Toro approved attachments and accessories is available for use with the machine to enhance and expand its capabilities. Contact your Authorized Service Dealer or authorized Toro distributor or go to www.Toro.com for a list of all approved attachments and accessories.

To ensure optimum performance and continued safety certification of the machine, use only genuine Toro replacement parts and accessories. Replacement parts and accessories made by other manufacturers could be dangerous, and such use could void the product warranty.

Operation

Determine the left and right sides of the machine from the normal operating position.

Installing and Removing the Attachment

Refer to the *Operator's Manual* for the traction unit for the installation and removal procedure.

Important: **Before installing the attachment, position the machine on a level surface, ensure that the mount plates are free of any dirt or debris, and ensure that the pins rotate freely. If the pins do not rotate freely, grease them.**

Note: Always use the traction unit to lift and move the attachment.

⚠ WARNING

If you do not fully seat the quick-attach pins through the attachment mount plate, the attachment could fall off the machine, crushing you or bystanders.

Ensure that the quick-attach pins are fully seated in the attachment mount plate.

⚠ WARNING

Hydraulic fluid escaping under pressure can penetrate skin and cause injury. Fluid injected into the skin must be surgically removed within a few hours by a doctor familiar with this form of injury; otherwise, gangrene may result.

- **Ensure that all hydraulic-fluid hoses and lines are in good condition and all hydraulic connections and fittings are tight before applying pressure to the hydraulic system.**
- **Keep your body and hands away from pinhole leaks or nozzles that eject high-pressure hydraulic fluid.**
- **Use cardboard or paper to find hydraulic leaks; never use your hands.**

⚠ CAUTION

Hydraulic couplers, hydraulic lines/valves, and hydraulic fluid may be hot. If you contact hot components, you may be burned.

- **Wear gloves when operating the hydraulic couplers.**
- **Allow the machine to cool before touching hydraulic components.**
- **Do not touch hydraulic fluid spills.**

Adjusting the Skids

Model 22583

The distance between the scraper blade and the ground is controlled by skids on each side of the housing. Adjust the height so that the scraper blade does not catch on uneven surfaces.

1. Park the machine on a level surface and engage the parking brake (if equipped).
2. Raise the snow thrower 30 cm (12 inches) off the ground.
3. Shut off the engine and remove the key.
4. Loosen the bolts securing the skids to the housing.

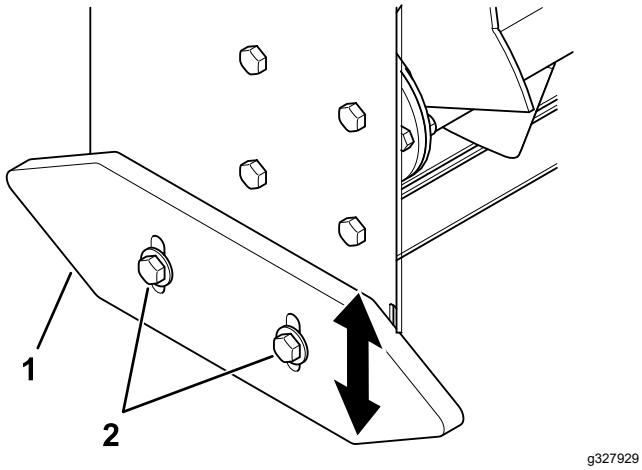

Figure 13

1. Skid
2. Bolts

5. Start the engine, lower the loader arms, and tilt the snow thrower to the desired scraper blade position.

   Important: **For cracked, rough, or uneven surfaces, position the scraper blade higher above the surface.**

   For smooth, paved surfaces, position the scraper blade is closer to the surface.

   Note: You can also place a sturdy object of the desired scraper height under the scraper and lower the scraper onto it.
6. Shut off the engine and remove the key.
7. Position the skids evenly on both sides so that the bottom edges contact or are parallel with the surface.

   Important: **Not positioning the skids evenly or parallel with the surface causes premature wear.**
8. Tighten the fasteners.

Model 22585

The distance between the scraper blade and the ground is controlled by skids on each side of the housing. Adjust the height so that the scraper blade does not catch on uneven surfaces.

1. Park the machine on a level surface and engage the parking brake (if equipped).
2. Raise the snow thrower 30 cm (12 inches) off the ground.
3. Shut off the engine and remove the key.
4. Remove the nuts, washers, and bolts securing the skids to the housing.

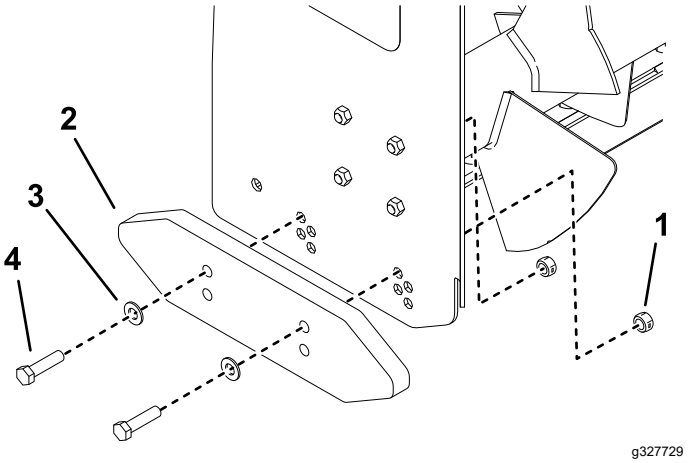

Figure 14

1. Nut (2)
2. Skid
3. Washer (2)
4. Bolt (2)

5. Position the skids evenly on both sides so that they are parallel with the surface and install the fasteners.

   Important: **For cracked, rough, or uneven surfaces, position the skids lower.**

   For smooth, paved surfaces, position the skids higher so that the scraper blade is closer to the surface.

   Important: **Not positioning the skids evenly or parallel with the surface causes premature wear.**

Operating the Snow Thrower

Use the detent position (if applicable) as you operate the snow thrower. Set the engine speed to low throttle and engage the auxiliary hydraulic controls to start the auger.

Note: The fan should spin clockwise, and the auger should spin counterclockwise when viewed from the left side from the operating position. If the fan or auger spins in the wrong direction, switch the couplers on the hydraulic hoses.

Important: **For telescoping machines, operate the snow thrower with the loader arms retracted; extending the arms could damage the wire harness and control box.**

Clearing a Clogged Snow Thrower

⚠ WARNING

If the auger/impeller is running but there is no snow coming out of the discharge chute, the discharge chute may be clogged.

Never use your hands to clear a clogged discharge chute. This could result in personal injury.

Note: If an object is lodged in the auger, reverse the hydraulic flow. If this does not dislodge the object, continue as follows.

1. Park the machine on a level surface and engage the parking brake (if equipped).
2. Shut off the engine, remove the key, and wait for all moving parts to stop before leaving the operating position.
3. Disconnect the hydraulic hoses.
4. Use a stick to clear the snow thrower.
5. Connect the hydraulic hoses before resuming operation.

Transport Position

When transporting the attachment, keep it as close to the ground as possible, no more than 15 cm (6 inches) above the ground. Tilt it rearward.

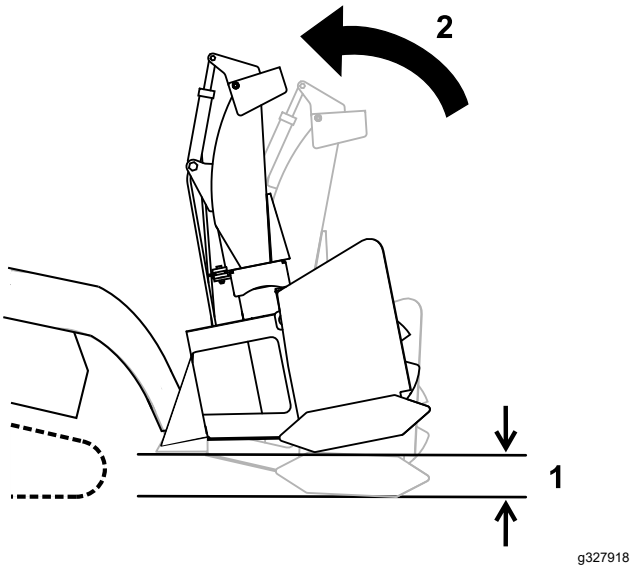

Figure 15

1. No more than 15 cm (6 inches) above the ground
2. Tilt the attachment rearward.

Operating Tips

- Engage and disengage the snow thrower auger at low throttle.
- Use the chute direction control to rotate the chute 180° side to side.
- When clearing snow when you can discharge snow on both sides of the path, clear the snow from the center of the path and then clear outwards.
- When clearing snow with 1 discharge direction, clear snow further from the discharge area and then clear toward the discharge area.
- Use the deflector angle control to move the chute deflector up and down to control the height and distance snow is thrown.
- Remove snow as soon as possible after it falls. This produces the best snow removal results.
- Discharge snow downwind whenever possible and overlap each pass to ensure complete snow removal. If the tracks or wheels slip, reduce the forward speed.
- Run the snow thrower for a few minutes after clearing snow so moving parts do not freeze.
- Do not overload the snow thrower by clearing snow at too fast a rate. If the engine slows down, reduce the forward speed to supply more power to the snow thrower.
- Do not use the snow thrower to push snow. Reduce the forward speed and allow the snow thrower to collect and discharge the snow.
- In some snow and cold weather conditions, some controls and moving parts may freeze. Therefore, when any control becomes difficult to operate, shut off the machine and wait for all moving parts to stop; then check all parts for freeze up. **Do not use excessive force when trying to operate frozen controls.** Free all controls and moving parts before operating.
- When possible, discharge snow the same direction as the wind.

Maintenance

Determine the left and right sides of the machine from the normal operating position.

⚠ CAUTION

If you leave the key in the switch, someone could accidently start the engine and seriously injure you or other bystanders.

Remove the key from the switch before you perform any maintenance.

Recommended Maintenance Schedule(s)

Maintenance Service Interval	Maintenance Procedure
Before each use or daily	• Grease the snow thrower. (Immediately after every washing.) • Check the hydraulic lines for leaks, loose fittings, kinked lines, loose mounting supports, wear, weather, and chemical deterioration.
Every 100 hours	• Check the condition of the skids. • Check the condition of the scraper blade.
Before storage	• Grease the snow thrower. • Paint chipped surfaces.
Yearly or before storage	• Check the condition of the skids. • Check the condition of the scraper blade.

Greasing the Snow Thrower

Model 22583 Only

Service Interval: Before each use or daily
(Immediately after every washing.)

Before storage

Grease Type: General-purpose grease

1. Park the machine on a level surface and engage the parking brake (if equipped).
2. Shut off the engine, remove the key, and wait for all moving parts to stop before leaving the operating position.
3. Grease the bearing.

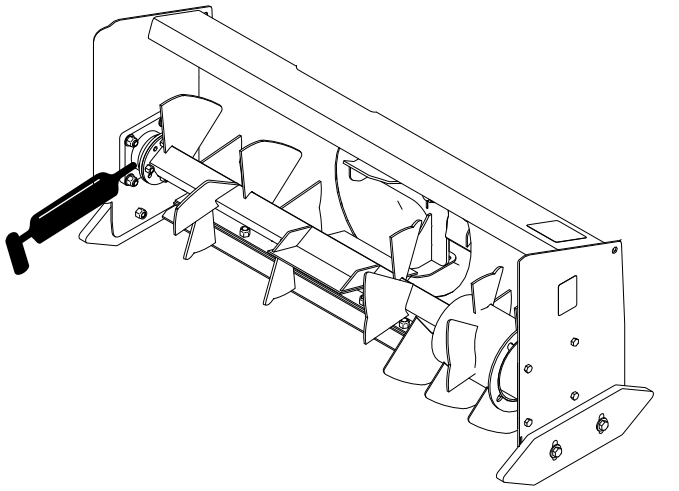

g328476

Figure 16

4. Wipe up any excess grease.

Checking and Replacing the Skids

Service Interval: Every 100 hours

Yearly or before storage

Check the skids for wear. Rotate the skids or replace them when worn.

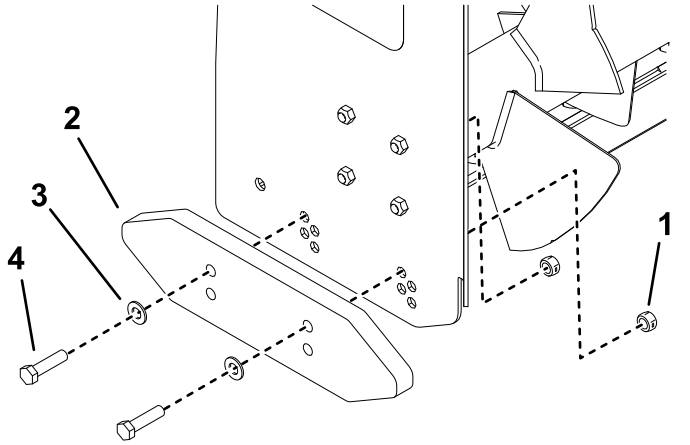

Figure 17

Model 22585

1. Nut (2)
2. Skid
3. Washer (2)
4. Bolt (2)

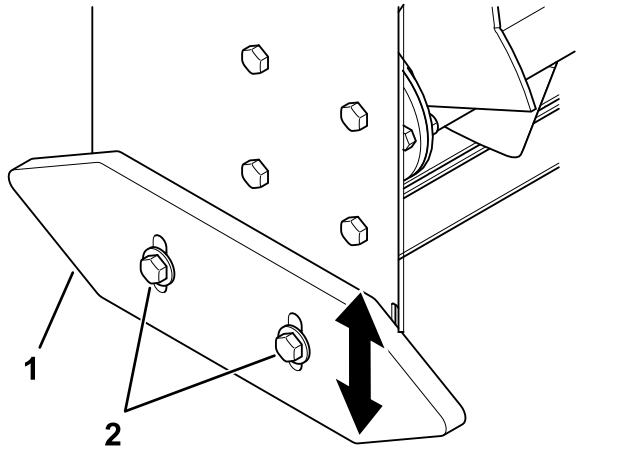

Figure 18

Model 22583

1. Skid
2. Bolts

Replacing the Scraper Blade

Service Interval: Every 100 hours—Check the condition of the scraper blade.

Yearly or before storage—Check the condition of the scraper blade.

The scraper blade contacts the ground to prevent damage to the snow thrower housing. Periodically inspect the scraper blade for wear. Rotate or replace it when it becomes worn, before the working surface contacts the housing.

1. Park the machine on a level surface and engage the parking brake (if equipped).
2. Raise the snow thrower 30 cm (12 inches) off the ground.
3. Shut off the engine and remove the key.
4. Remove the nuts, carriage bolts, and scraper blade.

   Note: The snow thrower for the TXL 2000 uses 10 carriage bolts and 10 nuts.

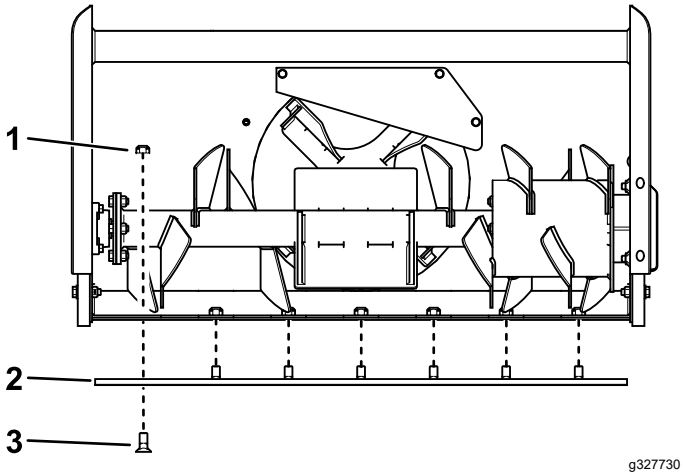

Figure 19

Compact Tool Carrier Snow Thrower Shown

1. Nut (7)
2. Scraper blade
3. Carriage bolt (7)

5. Replace or rotate the scraper blade and secure it with the previously removed fasteners.

Checking the Hydraulic Lines

Service Interval: Before each use or daily

⚠ WARNING

Hydraulic fluid escaping under pressure can penetrate skin and cause injury. Fluid injected into the skin must be surgically removed within a few hours by a doctor familiar with this form of injury; otherwise, gangrene may result.

- **Keep your body and hands away from pinhole leaks or nozzles that eject high-pressure hydraulic fluid.**
- **Use cardboard or paper to find hydraulic leaks; never use your hands.**

Storage

1. Before long term storage, wash the attachment with mild detergent and water to remove dirt and grime.
2. Check the condition of the scraper blade.
3. Check and tighten all bolts, nuts, and screws. Repair or replace any damaged or worn parts.
4. Paint all scratched or bare metal surfaces. Paint is available from your Authorized Service Dealer.
5. Store the attachment in a clean, dry garage or storage area. Cover it to protect it and keep it clean.

Troubleshooting

Problem	Possible Cause	Corrective Action
The snow thrower does not operate.	1. A hydraulic coupler is not completely connected	1. Check and tighten all couplers.
	2. A hydraulic coupler is damaged.	2. Check the couplers and replace any that are damaged.
	3. There is an obstruction in a hydraulic hose.	3. Find and remove the obstruction.
	4. A hydraulic hose is kinked.	4. Replace the kinked hose.
	5. The auxiliary valve on the traction unit is not opening.	5. Repair the valve.
	6. A hydraulic motor is damaged or worn.	6. Replace or repair the motor.
The chute does not rotate or the deflector does not raise or lower.	1. The wire harness or solenoid connector is not fully connected.	1. Fully connect the wire harness or solenoid connector.

California Proposition 65 Warning Information

What is this warning?

You may see a product for sale that has a warning label like the following:



WARNING: Cancer and Reproductive Harm—www.p65Warnings.ca.gov.

What is Prop 65?

Prop 65 applies to any company operating in California, selling products in California, or manufacturing products that may be sold in or brought into California. It mandates that the Governor of California maintain and publish a list of chemicals known to cause cancer, birth defects, and/or other reproductive harm. The list, which is updated annually, includes hundreds of chemicals found in many everyday items. The purpose of Prop 65 is to inform the public about exposure to these chemicals.

Prop 65 does not ban the sale of products containing these chemicals but instead requires warnings on any product, product packaging, or literature with the product. Moreover, a Prop 65 warning does not mean that a product is in violation of any product safety standards or requirements. In fact, the California government has clarified that a Prop 65 warning "is not the same as a regulatory decision that a product is 'safe' or 'unsafe.'" Many of these chemicals have been used in everyday products for years without documented harm. For more information, go to https://oag.ca.gov/prop65/faqs-view-all.

A Prop 65 warning means that a company has either (1) evaluated the exposure and has concluded that it exceeds the "no significant risk level"; or (2) has chosen to provide a warning based on its understanding about the presence of a listed chemical without attempting to evaluate the exposure.

Does this law apply everywhere?

Prop 65 warnings are required under California law only. These warnings are seen throughout California in a wide range of settings, including but not limited to restaurants, grocery stores, hotels, schools, and hospitals, and on a wide variety of products. Additionally, some online and mail order retailers provide Prop 65 warnings on their websites or in catalogs.

How do the California warnings compare to federal limits?

Prop 65 standards are often more stringent than federal and international standards. There are various substances that require a Prop 65 warning at levels that are far lower than federal action limits. For example, the Prop 65 standard for warnings for lead is 0.5 µg/day, which is well below the federal and international standards.

Why don't all similar products carry the warning?

- Products sold in California require Prop 65 labelling while similar products sold elsewhere do not.
- A company involved in a Prop 65 lawsuit reaching a settlement may be required to use Prop 65 warnings for its products, but other companies making similar products may have no such requirement.
- The enforcement of Prop 65 is inconsistent.
- Companies may elect not to provide warnings because they conclude that they are not required to do so under Prop 65; a lack of warnings for a product does not mean that the product is free of listed chemicals at similar levels.

Why does Toro include this warning?

Toro has chosen to provide consumers with as much information as possible so that they can make informed decisions about the products they buy and use. Toro provides warnings in certain cases based on its knowledge of the presence of one or more listed chemicals without evaluating the level of exposure, as not all the listed chemicals provide exposure limit requirements. While the exposure from Toro products may be negligible or well within the "no significant risk" range, out of an abundance of caution, Toro has elected to provide the Prop 65 warnings. Moreover, if Toro does not provide these warnings, it could be sued by the State of California or by private parties seeking to enforce Prop 65 and subject to substantial penalties.