RS 4 / RS 4 PRO

User Manual

v1.0 2024.04

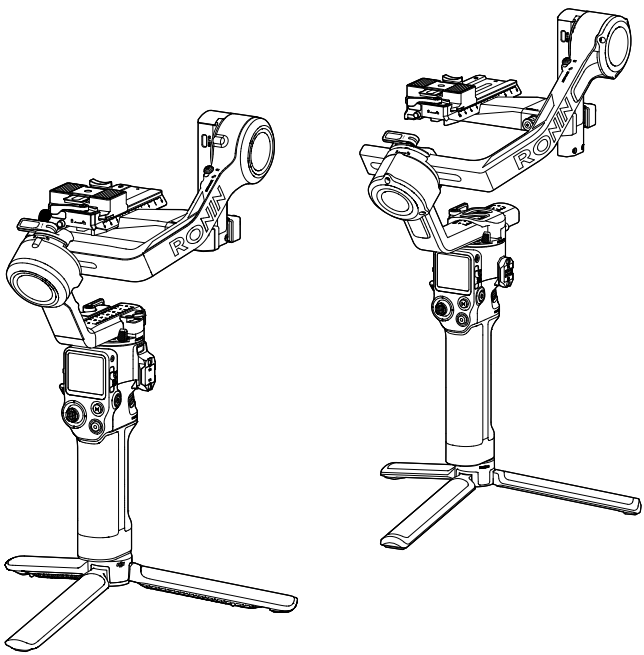

This document is copyrighted by DJI with all rights reserved. Unless otherwise authorized by DJI, you are not eligible to use or allow others to use the document or any part of the document by reproducing, transferring, or selling the document. Users should only refer to this document and the content thereof as instructions to operate DJI products. The document should not be used for other purposes.

Searching for Keywords

Search for keywords such as Battery or Install to find a topic. If you are using Adobe Acrobat Reader to read this document, press Ctrl+F on Windows or Command+F on Mac to begin a search.

Navigating to a Topic

View a complete list of topics in the table of contents. Click on a topic to navigate to that section.

Printing this Document

This document supports high resolution printing.

 © 2024 DJI OSMO All Rights Reserved.

Using this Manual

Legends

⚠ Important

Hints and Tips

Read Before Use

The following manuals have been produced to help you get the most out of your gimbal:

Quick Start Guide

Safety Guidelines

User Manual

Read the entire quick start guide and user manual and watch the informational and tutorial videos on the product page of the DJI™ official website (https://www.dji.com/rs-4, https://www.dji.com/rs-4-pro). Read the safety guidelines to understand your legal rights and responsibilities. If you have any questions or problems during the installation, maintenance, or use of this product, contact DJI or a DJI authorized dealer.

Download the Ronin App and Watch the Tutorial Videos

DJI RS 4

https://s.dji.com/guide73

DJI RS 4 Pro

https://s.dji.com/guide72

© 2024 DJI OSMO All Rights Reserved.

Contents

Using this Manual 3
Legends 3
Read Before Use 3
Download the Ronin App and Watch the Tutorial Videos 3

Contents 4

Introduction 5
DJI RS 4 Diagram 6
DJI RS 4 Pro Diagram 7

Using For The First Time 8
Charging the Battery 8
Attaching the Extended Grip/Tripod 9
Mounting the Camera 10
Balancing 14
Activation 22
Firmware Update 23
Connecting a Camera 23
Auto Tune 24

Operations 25
Button and Port Functions 25
Touchscreen 28
Gimbal Follow Modes 33
Gimbal Operation Modes 35
Ronin App Settings 37

Grip and Built-In Battery 49

Maintenance 52

Specifications 52

© 2024 DJI OSMO All Rights Reserved.

Introduction

DJI RS 4 and DJI RS 4 Pro are professional single-handed 3-axis gimbals compatible with most mainstream cameras using a 24-70mm F2.8 lens. DJI RS 4 is specifically designed for mirrorless cameras and supports a tested payload of up to 3 kg. DJI RS 4 Pro is specifically designed for mirrorless and miniature cameras and supports a tested payload of up to 4.5 kg.

The structure of the gimbal is easy to adjust. Quickly disassemble and install the gimbal horizontal plate to switch between horizontal shooting mode and vertical shooting mode. The new joystick mode switch can quickly switch the joystick mode to gimbal movement control or zoom control. The automated axis locks greatly improve shooting efficiency and experience. With a 1.8-inch OLED touchscreen, users can calibrate the gimbal and set parameters. Users can control the gimbal movement, shutter, recording, and camera focus using the onboard buttons. The gimbal can be paired with cameras via Bluetooth or connected to the camera using the camera control cable for convenient control. The onboard RSA/NATO ports support accessories like the DJI RS Briefcase Handle.

DJI RS 4 has a runtime of 12 hours [1] and DJI RS 4 Pro has a runtime of 13 hours [1]. Both gimbals are compatible with the BG70 High-Capacity Battery Grip, which extends the runtime of DJI RS 4 and DJI RS 4 Pro to 29.5 hours and 29 hours respectively. [2]

The gimbal can be connected to the Ronin app. Users can control the gimbal, set parameters, and use intelligent functions such as Panorama, Timelapse, and Track using the app.

DJI RS 4 enables camera control when used with the new DJI Focus Pro Motor. DJI RS 4 Pro enables autofocus when used with the new DJI Focus Pro Motor and LiDAR. DJI RS 4 Pro, DJI Transmission, and DJI Focus Pro focusing system are interconnected for stabilization, video monitoring, gimbal control, autofocus, and focus assistant.

[1] Measured with the gimbal balanced in a level and stationary state. When the gimbal is in motion, the operating time will be reduced.

[2] Measured at 24° C in a laboratory environment with the gimbal balanced in a level and stationary state, for reference only.

© 2024 DJI OSMO All Rights Reserved.

DJI RS 4 Diagram

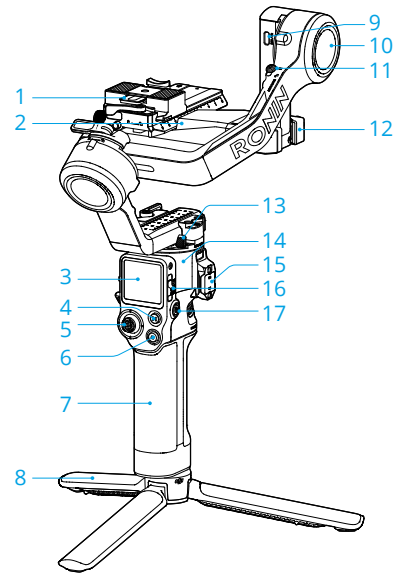

1. Upper/Lower Quick-Release Plate
2. Gimbal Horizontal Plate (Removable Part on the Camera Mounting Plate)
3. 1.8-inch OLED Full-Color Touchscreen
4. M Button
5. Joystick
6. Camera Control Button
7. BG21 Grip (Built-in battery with 1/4"-20 screw hole)
8. Extended Grip/Tripod
9. RSS Camera Control Port (USB-C)
10. Tilt Motor
11. Tilt Lock
12. Camera Mounting Plate
13. Pan Lock
14. Pan Motor
15. NATO Port
16. Gimbal Mode Switch
17. Power Button

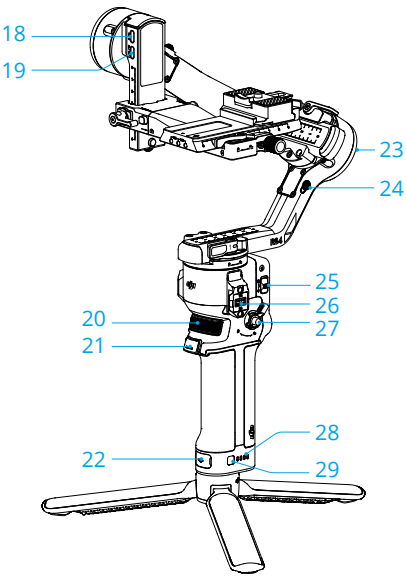

18. Focus Motor Port (USB-C)
19. Video Transmission Port (USB-C)
20. Front Dial
21. Trigger
22. Charging Port (USB-C)
23. Roll Motor
24. Roll Lock
25. Joystick Mode Switch
26. Ronin Series Accessories (RSA)/NATO Ports
27. Grip Lever/Safety Button
28. Battery Level Indicators
29. Battery Level Button

© 2024 DJI OSMO All Rights Reserved.

DJI RS 4 Pro Diagram

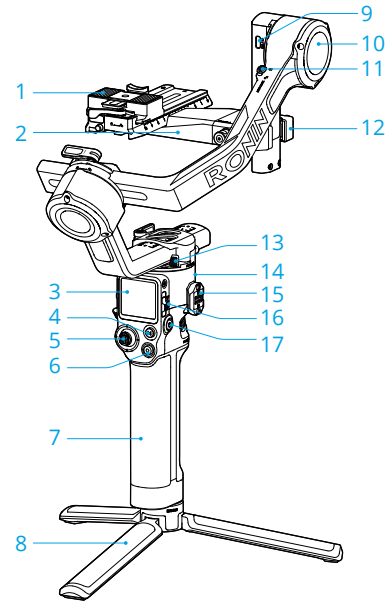

1. Upper/Lower Quick-Release Plate
2. Gimbal Horizontal Plate (Removable Part on the Camera Mounting Plate)
3. 1.8-inch OLED Full-Color Touchscreen
4. M Button
5. Joystick
6. Camera Control Button
7. BG30 Grip (Built-in battery with 1/4"-20 screw hole)
8. Extended Grip/Tripod
9. RSS Camera Control Port (USB-C)
10. Tilt Motor
11. Tilt Lock
12. Camera Mounting Plate
13. Pan Lock
14. Pan Motor
15. Ronin Series Accessories (RSA)/NATO Ports
16. Gimbal Mode Switch
17. Power Button

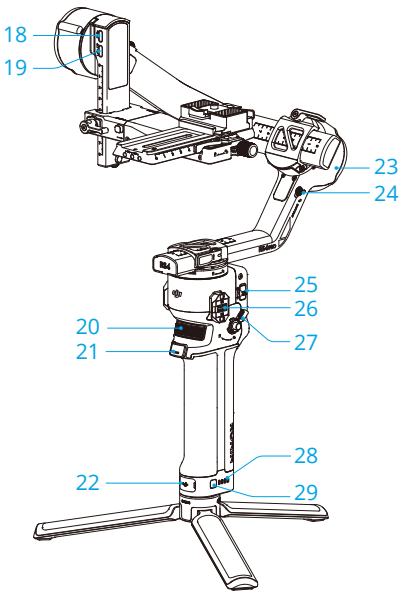

18. Focus Motor Port (USB-C)
19. Video Transmission/LiDAR Range Finder Port (USB-C)
20. Front Dial
21. Trigger
22. Charging Port (USB-C)
23. Roll Motor
24. Roll Lock
25. Joystick Mode Switch
26. Ronin Series Accessories (RSA)/NATO Ports
27. Grip Lever/Safety Button
28. Battery Level Indicators
29. Battery Level Button

© 2024 DJI OSMO All Rights Reserved.

Using For The First Time

Charging the Battery

For first time use, connect the USB-C port of the battery grip with the provided USB-A to USB-C cable to activate the battery and charging. Activation is completed when the battery indicator lights up. It takes about 2.5 hours [1] to fully charge the battery of DJI RS 4 and 1.5 hours [2] to fully charge the battery of DJI RS 4 Pro. Press the battery level button to check the current battery level when powered off.

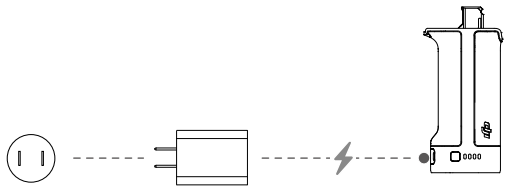

[1] Measured with a charger supporting 18 W fast charging. It is recommended to use chargers supporting PD protocol.

[2] Measured with a charger supporting 24 W fast charging. It is recommended to use chargers supporting QC 2.0 or PD protocol.

 © 2024 DJI OSMO All Rights Reserved.

Attaching the Extended Grip/Tripod

1. Attach the extended grip/tripod to the battery grip, tighten, and then unfold the tripod.
2. After removing the foam and protective film from the axis arms of DJI RS 4 and the silicone cover from the axis arms of DJI RS 4 Pro, attach the gimbal to the battery grip. Tighten the grip lever in the locking direction after you hear a "click" to ensure that the handle is firmly attached.

- DJI RS 4 and DJI RS 4 Pro are installed in the same way. DJI RS 4 is used as an example below.

- Move the grip lever firmly until no further rotation is possible. The arrow indicates the direction of locking only and does not represent the fully locked position.

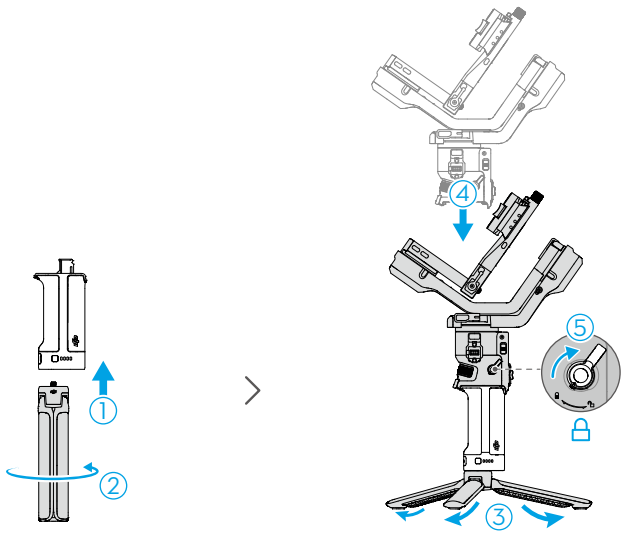

To remove the grip, hold the lever in the unlocked position, press and hold the safety button, and then pull the grip away from the gimbal.

© 2024 DJI OSMO All Rights Reserved.

Mounting the Camera

Supported Cameras and Lenses

DJI RS 4 and DJI RS 4 Pro have been rigorously tested to support a payload of 3 kg and 4.5 kg respectively. Make sure the combined weight of the camera, lens, and other accessories are within the load capacity. Refer to the official DJI website (https://www.dji.com/support/compatibility) for the most updated Ronin Series Compatibility List.

Mounting a Camera

Make the following preparations before mounting the camera:

- Remove the lens cap and check that the battery and memory card are inserted in the camera.
- Make sure to power off the gimbal.
- Unlock the pan axis and rotate it 180°. Move the tilt and roll locks to the unlocked position respectively and adjust the position of both axes as shown in the figure below, then lock the axes.

- DJI RS 4 and DJI RS 4 Pro are installed in the same way. DJI RS 4 is used as an example below.

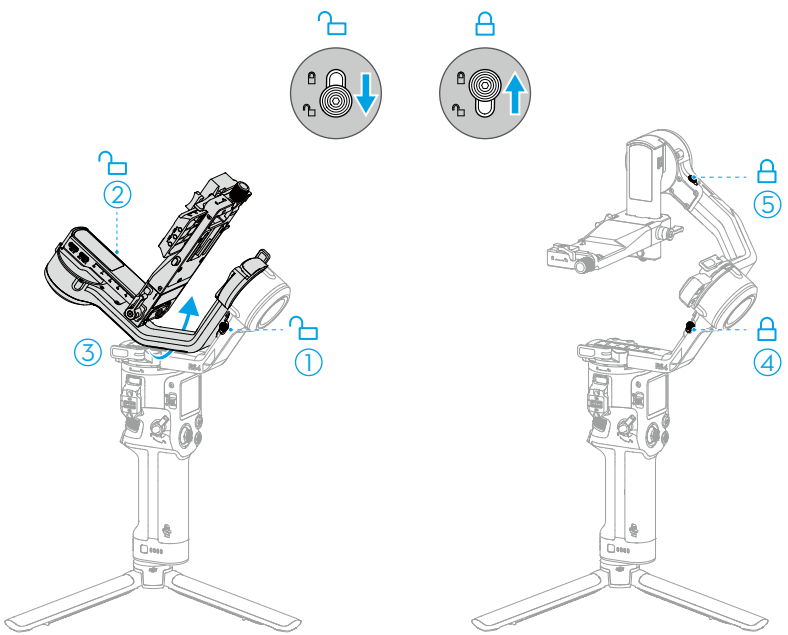

 © 2024 DJI OSMO All Rights Reserved.

- During mounting, if the pan axis lever, roll axis lever, and knobs on either side of the mounting plate interfere with the camera, lift up the levers or knobs to reorient them.

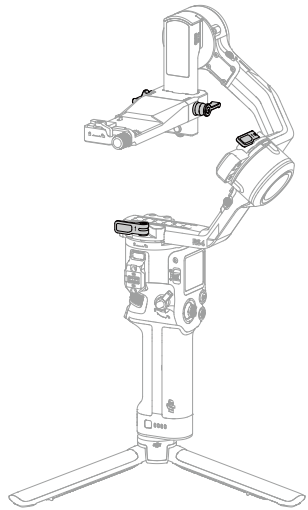

1. Attach the Upper Quick-Release Plate

Attach the upper quick-release plate to the bottom of the camera with the 1/4" screw in the screw kit. Snap the adjustable placement guide onto the camera body before locking the screw.

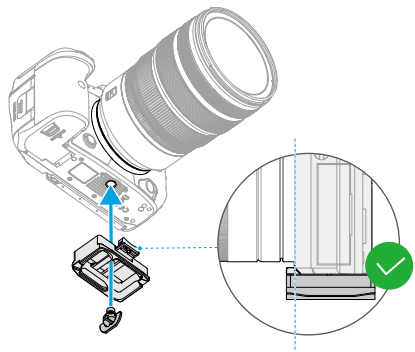

© 2024 DJI OSMO All Rights Reserved.

2. Attach the Camera to the Gimbal

DJI RS 4 and DJI RS 4 Pro support horizontal shooting and vertical shooting. Follow the steps to install the camera in horizontal and vertical shooting modes.

Horizontal Shooting

a. Move the lever on the mounting plate to the unlocked position, insert the lower quick-release plate and move the lever to the locked position after it is engaged.

b. Move the lever on the lower quick-release plate to the unlocked position, insert the upper quick-release plate and move the lever to the locked position after it is engaged.

- To remove the camera from the lower quick-release plate, move the lever to the unlocked position and remove the camera while pressing the safety lock beside the lever.
- To remove the lower quick-release plate, move the lever on the camera mounting plate to the unlocked position and remove the lower quick-release plate while pressing the safety lock on the mounting plate.

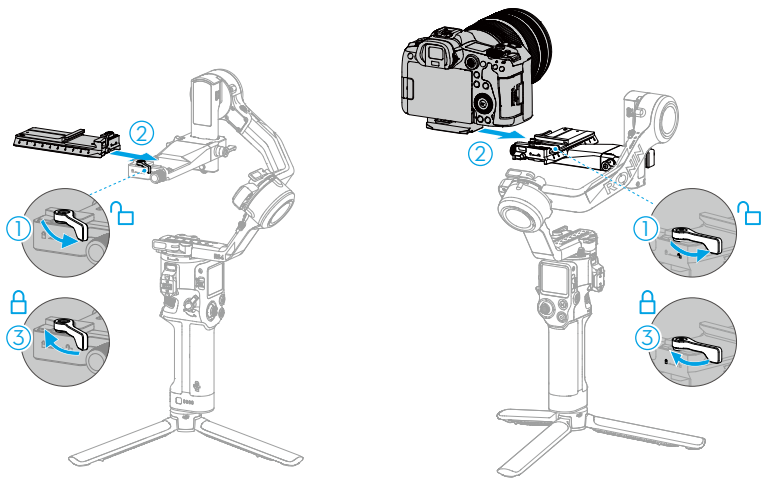

It is recommended to use the lens-fastening support when using a long or heavy lens.

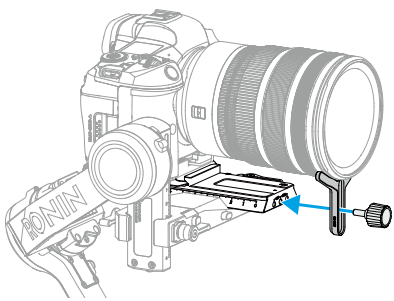

© 2024 DJI OSMO All Rights Reserved.

Vertical Shooting

a. Loosen the knob on the camera mounting plate and press the knob and safety lock at the same time, then remove the gimbal horizontal plate, mount it vertically to the gimbal and tighten the knob.

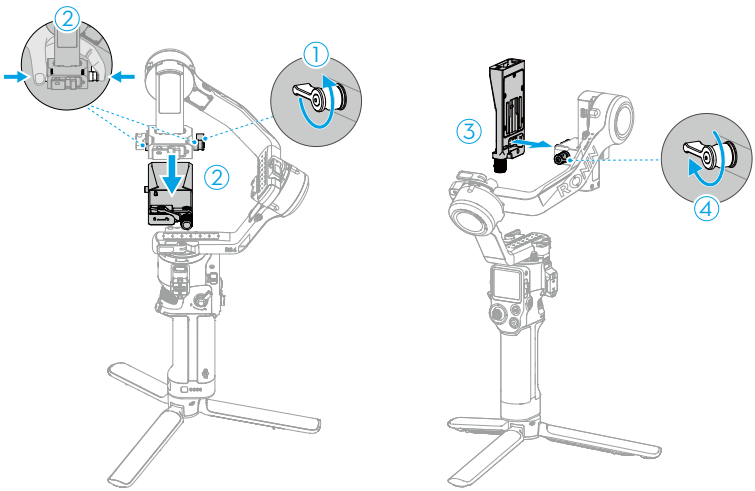

b. Move the lever on the horizontal plate to the unlocked position, insert the lower quick-release plate and move the lever to the locked position after it is engaged.

c. Unlock the tilt axis and lightly rest the axis arm to keep it in the horizontal position. Move the lever on the lower quick-release plate to the unlocked position, insert the upper quick-release plate, and move the lever to the locked position after it is engaged. Lock the tilt axis.

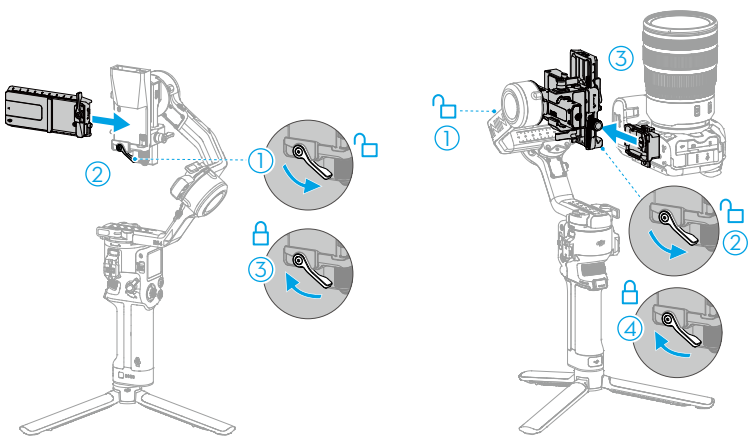

© 2024 DJI OSMO All Rights Reserved.

Balancing

Balance the vertical tilt, the depth for the tilt axis, the roll axis and the pan axis in sequence according to the shooting requirements before using the gimbal. This ensures the stability of videos and the full performance of the gimbal.

- The balance of DJI RS 4 and DJI RS 4 Pro is adjusted in the same way. DJI RS 4 is used as an example below.
- An unbalanced gimbal may affect the stability of videos and reduce the battery life. Severe imbalance may cause the device to overheat and go into hibernation.

Before Balancing

1. Before balancing, make sure to power on the camera if using an optical zoom lens and to select the focal length if using a varifocal lens.
2. Make sure DJI RS 4 / DJI RS 4 Pro is powered off or in sleep mode before balancing.

Balancing in Horizontal Shooting

1. balancing the Vertical Tilt
   a. Unlock the tilt axis ①.
   b. Follow the figure below (top view) and rotate the tilt axis so that the camera lens is pointing upward. Check to make sure the camera is not top or bottom-heavy. If top-heavy, move the camera backward. If bottom-heavy, move the camera forward. Loosen the mounting plate knob ② and move the mounting plate ③ back and forth to adjust the center of gravity.
   c. Tighten the mounting plate knob while holding the camera upward. The vertical tilt is balanced when the camera is steady while pointing upward.

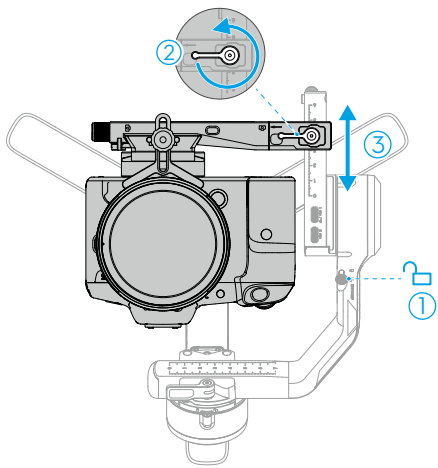

 © 2024 DJI OSMO All Rights Reserved.

2. Balancing Depth for the Tilt Axis
   a. Rotate the tilt axis so that the camera lens is pointing forward.
   b. Check to make sure the camera is not front or back-heavy. If front-heavy, move the camera backward by turning the knob. If back-heavy, move the camera forward. Unlock the lever ① on the mounting plate and move the lower quick-release plate ② back and forth to adjust the center of gravity.
   c. Move the lever on the mounting plate to the locked position. The tilt axis is balanced when the camera is steady while tilted up or down by 45°.
   d. Lock the tilt axis ③.

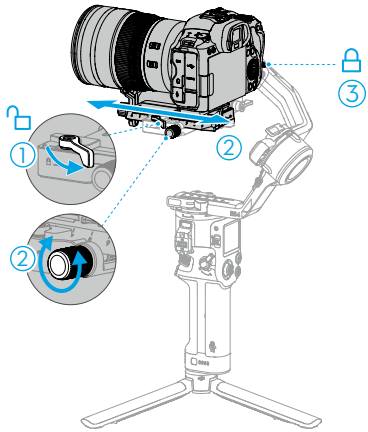

© 2024 DJI OSMO All Rights Reserved.

3. Balancing the Roll Axis
   a. Lightly rest the axis arm and unlock the roll axis ①.
   b. Check the direction in which the roll motor swings. If the camera rotates to the left, move the camera to the right. If the camera rotates to the right, move the camera to the left. Unlock the lever on the roll axis ②, lightly rest the mounting plate (camera) and move the roll axis arm ③ to adjust the center of gravity.
   c. Move the lever on the roll arm to the locked position. The roll axis is balanced when the camera is steady horizontally.
   d. Lock the roll axis.

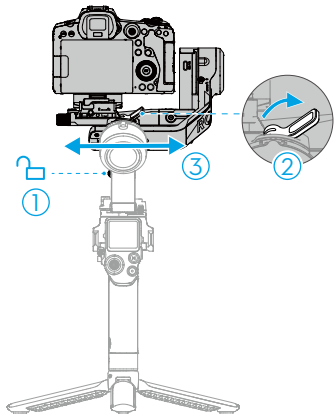

© 2024 DJI OSMO All Rights Reserved.

4. Balancing the Pan Axis
   a. Unlock the pan axis ①.
   b. While holding the grip, tilt the gimbal forward, and rotate the pan arm until parallel with you. Check the movement of the pan axis. If the camera lens rotates to the left, push the pan axis to the right. If the camera lens rotates to the right, push the pan axis to the left. Unlock the lever on the pan axis ② and move the pan axis arm ③ to adjust the center of gravity.
   c. Move the lever on the pan arm to the locked position. The pan axis is balanced when the camera is steady when rotating the pan while tilting the grip.

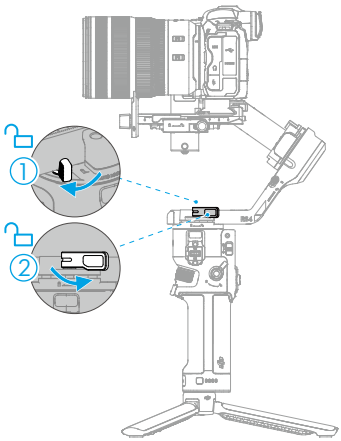

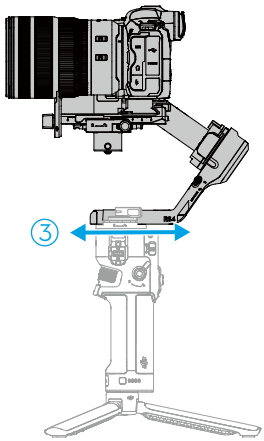

© 2024 DJI OSMO All Rights Reserved.

Balancing in Vertical Shooting

1. balancing the Vertical Tilt
   a. Unlock the tilt axis ①.
   b. Follow the figure below (top view) and rotate the tilt axis so that the camera lens is pointing upward. Check to make sure the camera is not top or bottom-heavy. If top-heavy, move the camera backward. If bottom-heavy, move the camera forward. Loosen the mounting plate knob ② and move the mounting plate ③ back and forth to adjust the center of gravity.
   c. Tighten the mounting plate knob while holding the camera upward. The vertical tilt is balanced when the camera is steady while pointing upward.

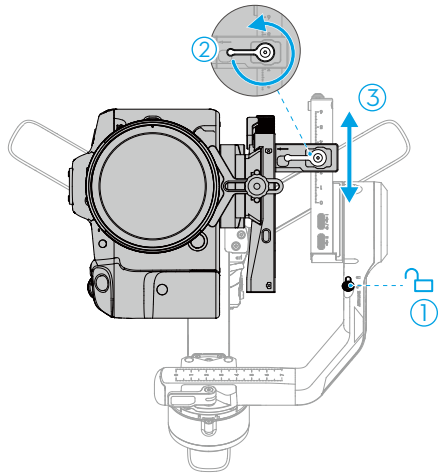

© 2024 DJI OSMO All Rights Reserved.

2. Balancing Depth for the Tilt Axis
   a. Rotate the tilt axis so that the camera lens is pointing forward.
   b. Check to make sure the camera is not front or back-heavy. If front-heavy, move the camera backward by turning the knob. If back-heavy, move the camera forward. Unlock the lever ① on the mounting plate and move the lower quick-release plate ② back and forth to adjust the center of gravity.
   c. Move the lever on the mounting plate to the locked position. The tilt axis is balanced when the camera is steady while tilted up or down by 45°.
   d. Lock the tilt axis ③.

> • There is no need to rebalance the depth for the tilt axis when switching to vertical shooting mode from horizontal shooting mode.

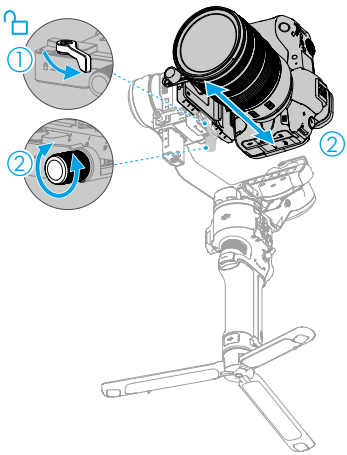

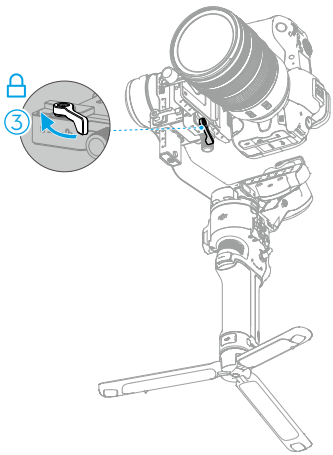

© 2024 DJI OSMO All Rights Reserved.

3. Balancing the Roll Axis
   a. Lightly rest the axis arm and unlock the roll axis ①.
   b. Check the direction in which the roll motor swings. If the camera rotates to the left, move the camera to the right. If the camera rotates to the right, move the camera to the left. Unlock the lever on the roll axis ② lightly rest the mounting plate (camera) and move the roll axis arm ③ to adjust the center of gravity.
   c. Move the lever on the roll arm to the locked position. The roll axis is balanced when the camera is steady horizontally.
   d. Lock the roll axis.

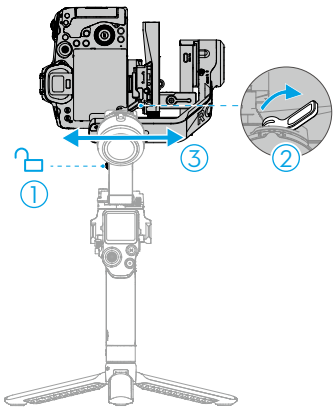

 © 2024 DJI OSMO All Rights Reserved.

4. Balancing the Pan Axis
   a. Unlock the pan axis ①.
   b. While holding the grip, tilt the gimbal forward, and rotate the pan arm until parallel with you. Check the movement of the pan axis. If the camera lens rotates to the left, push the pan axis to the right. If the camera lens rotates to the right, push the pan axis to the left. Unlock the lever on the pan axis ② and move the pan axis arm ③ to adjust the center of gravity.
   c. Move the lever on the pan arm to the locked position. The pan axis is balanced when the camera is steady when rotating the pan while tilting the grip.

- There is no need to readjust the balance of the pan axis when switching to vertical shooting mode from horizontal shooting mode.

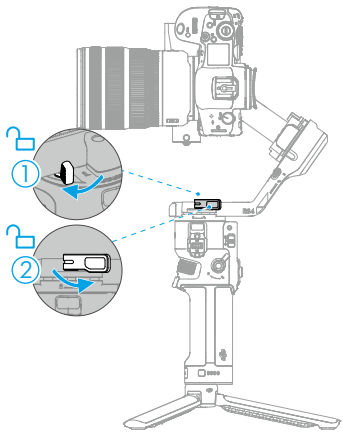

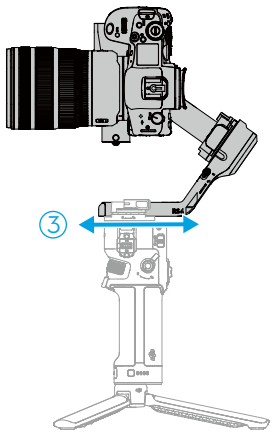

© 2024 DJI OSMO All Rights Reserved.

Activation

Activation is required for DJI RS 4 and DJI RS 4 Pro through the Ronin app. Follow the steps below to activate your device:

1. Press and hold the power button to power on your device, and select the language on the touchscreen.
2. Scan the QR code on the touchscreen to download the Ronin app. If the activation step is skipped, the gimbal will unlock automatically and prompt on-screen instructions.
3. Enable Bluetooth on the mobile phone. Launch the Ronin app and log in with a DJI account. Select the device used, type in the default password 12345678, and activate the gimbal according to the instructions. An internet connection is required for activation.

- Up to five uses without activating the gimbal are supported. After that, activation is required for further use.
- If the Ronin app cannot be downloaded after scanning the QR code on the screen of the device, visit https://www.dji.com/mobile/downloads/djiapp/dji-ronin or scan the QR code below.

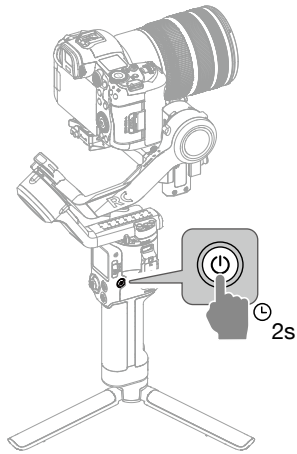

DJI Ronin App

 © 2024 DJI OSMO All Rights Reserved.

Firmware Update

If new firmware is available, users will be notified by the Ronin app. Update the firmware according to the on-screen instructions. DO NOT power off the gimbal or exit the app during the firmware update. If the update fails, restart the gimbal and Ronin app, and try again.

- Make sure the gimbal has sufficient power and the mobile phone is connected to the internet when updating.
- It is normal for the gimbal to unlock, lock, and reboot automatically during the update process.

Connecting a Camera

DJI RS 4 and DJI RS 4 Pro support connecting to the camera via Bluetooth or camera control cable.

Connect to the Camera via Bluetooth

Enable Bluetooth on Camera

The gimbal supports some Sony and Canon cameras controlling the shutter after connecting to the camera via Bluetooth. Refer to the Ronin Series Compatibility list for supported camera models and setting method.

Taking Canon EOS A7S3 as an example, set up the camera Bluetooth as follows.

1. Enter the Camera menu and select Network 2 > Bluetooth > Bluetooth Function> On.
2. Go to Networks, Bluetooth Remote Control, and select On.
3. Select the name of the gimbal used and perform pairing.

Taking Canon EOS R5 as an example, set up the camera Bluetooth as follows.

1. Enter the camera menu and select Wireless settings > Bluetooth Settings > Bluetooth > Enable.
2. Go to Wireless settings > Wi-Fi/Bluetooth connection and select Connect to Wireless Remote.
3. Short press the Q (speed control) button and select Drive Mode > Selfie. Set the delay to 1 s/remote or 2 s/remote.
4. Go to Settings > Power Saving > Auto Power Off, and select Disable.
5. Switch to Video Mode, and select Shoot and Record > Remote Control > Enable.

© 2024 DJI OSMO All Rights Reserved.

Setting up Gimbal Bluetooth

Swipe down from the top of the touchscreen on the Home screen to enter the Control Center screen. Tap the Bluetooth icon in the upper right corner. The gimbal will scan the Bluetooth signals of the surrounding devices. Select the corresponding camera Bluetooth to connect. Some cameras require a password for pairing. The Bluetooth icon turns blue indicating connection is successful.

- The gimbal can only connect to one camera at a time.

Notice

1. After connecting the camera to the gimbal for the first time, reboot the camera and gimbal, and then the Bluetooth shutter can automatically reconnect. Some cameras need the user to short press the gimbal camera control button to reconnect automatically after reboot.
2. Reconnect to the camera Bluetooth after firmware update.
3. Check the Ronin Series Compatibility list for detailed information on the control functions supported by the Bluetooth.

Connect to the Camera using Camera Control Cable

Use the camera control cable to connect the RSS camera control port of the gimbal to the USB port of the camera.

Check the Ronin Series Compatibility list for detailed information on cables used by the camera and the functions they can perform.

Auto Tune

Auto tune provides the proper stiffness for the motor according to the payload to obtain the optimum gimbal performance. Follow the steps below to start automatic calibration.

1. Press and hold the power button for two seconds to power on the gimbal and the three axes will unlock and expand automatically.
2. Press and hold the M button and trigger to start automatic calibration.

- Place the gimbal on a steady flat surface. DO NOT move the gimbal during automatic calibration. It is normal for the gimbal to shake or make sounds during the calibration.

 © 2024 DJI OSMO All Rights Reserved.

Operations

Button and Port Functions



Power Button

Press and hold: To power on/off the gimbal.

Press once: Enter or exit sleep mode. The three axes will automatically lock. Press again to wake up the gimbal.

- The three axes are automatically unlocked by default when the gimbal is powered on, and they will automatically fold and lock when the gimbal is powered off.
- Settings related to the automated axis locks can be adjusted in the system settings on the touchscreen.



Gimbal Mode Switch

Toggle to switch gimbal mode from PF, PTF, and FPV.

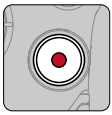

Camera Control Button

After connecting the camera, press halfway for autofocus. Press once to start or stop recording. Press and hold to take a photo.

- Check the Ronin Series Compatibility list for detailed information on supported camera features.



M Button

Press once to take photos by default.

For DJI RS 4, the function of the button can be set on the touchscreen to C1/Fn1 Button Mapping.

For DJI RS 4 Pro, the function of the button can be set on the touchscreen to C1/Fn1 Button Mapping or LiDAR AF/MF. *

* This requires the DJI Focus Pro LiDAR.

Press and hold: Enter Sport Mode. In Sport Mode, the follow speed of the gimbal increases greatly. It is suitable for shooting in scenarios where subjects move suddenly and at fast speeds.

Press and hold the M button while pressing the trigger twice: Enter and remain in Sport Mode. Repeat to exit.

© 2024 DJI OSMO All Rights Reserved.



Joystick Mode Switch

Push down: Set the joystick mode to gimbal movement control.

Push up: Set the joystick mode to zoom control.

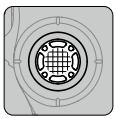

Joystick

For gimbal movement control: Move the joystick up and down to control the tilt of the gimbal and move the joystick left and right to control the pan of the gimbal.

For zoom control: Move the joystick up and down to control the zoom.

- Enable the power zoom on Sony cameras and then the joystick can control the power zoom of the camera. When used with the DJI Focus Pro Motor, the joystick can control the zoom after calibration. Set the motor to Z mode when in use.
- Joystick control mode and direction can be set in the Ronin app.



Trigger

Press and hold to enter Lock mode. In Lock mode, the gimbal will not respond to the movement of the grip. After setting up on the touchscreen, press and hold the trigger to enter FPV mode.

Tap twice to re-center the gimbal.

Tap three times to turn the gimbal 180° so that the camera faces you (selfie mode).



Front Dial

Turn to control the focus motor by default. The settings can be changed via the touchscreen. Refer to the Touchscreen section for more details.

- Check the Ronin Series Compatibility list for detailed information on supported features.

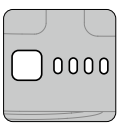

Battery Level Button

Press once to check battery level.



RSS Camera Control Port

For connecting the camera.

 © 2024 DJI OSMO All Rights Reserved.



Focus Motor Port

For connecting the focus motor.



Video Transmission Port (DJI RS 4)

For DJI RS 4, this port can be connected to the DJI Ronin Image Transmitter for communication or to the focus motor for focus control.

Video Transmission/LiDAR Range Finder Port (DJI RS 4 Pro)

For DJI RS 4 Pro, this port can be connected to the DJI Ronin Image Transmitter for communication, or to LiDAR to perform focus control, zoom control and ActiveTrack Pro.

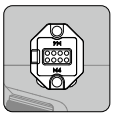

Ronin Series Accessories (RSA)/NATO Ports

For connecting the DJI R Focus Wheel, DJI R Twist Grip Dual Handle or the DJI RS Briefcase Handle.

- DJI RS 4 Pro has RSA/NATO ports on both sides of the touchscreen. DJI RS 4 has the RSA/NATO ports on the left side of the touchscreen and the NATO port on the right side.

© 2024 DJI OSMO All Rights Reserved.

Touchscreen

Home

The home screen displays icons for auto tune, balance status, gimbal follow mode, and follow speed. The status bar at the top of the touchscreen shows the gimbal connection status and battery level.

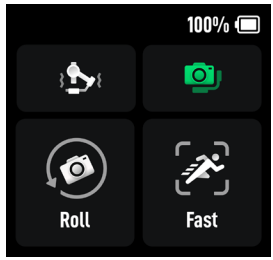

Auto Tune

The three values indicate the stiffness of the three axes on the auto tune page.

Tap Start Calibration and the gimbal of DJI RS 4 will calibrate automatically.

For DJI RS 4 Pro, select Handheld mode or Car Mount mode according to the shooting requirements and then tap Start Calibration. Handheld mode can meet the shooting requirements of most scenarios, and Car Mount mode can provide better stabilization in vehicle shooting scenarios.

- After balancing the gimbal, if changing the focal length, changing the lens or the camera causes the balance status icon to turn red, or if the gimbal shakes for no reason, it is recommended to perform automatic calibration.
- Place the gimbal on a steady flat surface. DO NOT move the gimbal during automatic calibration. It is normal for the gimbal to shake or make sounds during calibration.
- It is recommended to increase the stiffness if the gimbal is not stable enough and to lower the stiffness if the gimbal starts to shake.

Balance Status

When the status bar shows green or gray, this indicates the gimbal is balanced. If the status bar shows yellow, the gimbal is slightly unbalanced. The status bar shows red when the gimbal is critically unbalanced. In this case, re-balance the corresponding axis. To check the balance status of the gimbal, tilt the gimbal 15° left or right and check the status bar.

Gimbal Follow Mode

FPV mode can be switched to 3D Roll 360 mode or Custom mode via the touchscreen.

 © 2024 DJI OSMO All Rights Reserved.

Follow Speed

Tap to select follow speed. Users can choose fast, medium, slow, and custom. Tap the icon on the top-right of the touchscreen to customize the speed.

Slide Dow - Control Center Screen

Slide down from the top of the touchscreen to enter the control center screen.

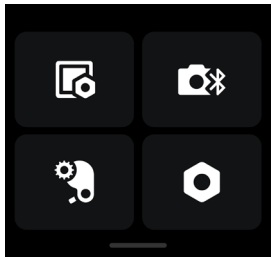

Display

Tap to set auto-lock, brightness while locked, and rotation. Enable rotation and the on-screen display will flip 180°. The screen will lock when there is no operation after timeout. The lock screen displays the gimbal follow mode, the mode of the joystick and its movement. Swipe up to exit the lock screen.

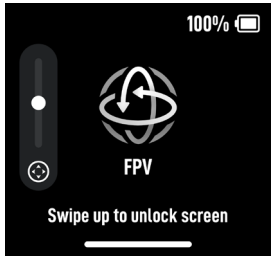

Bluetooth

Tap the icon to connect to the camera via Bluetooth. Tap Connect to pair the Bluetooth of the gimbal and camera. Some cameras, such as BMPCC-series cameras, require a password for pairing. The icon turns blue after connecting successfully.

- The gimbal can only connect to one camera at a time.

Focus Motor Endpoints

Focus motor calibration can be selected, and the endpoints of the focus motor can be set manually or be disabled.

© 2024 DJI OSMO All Rights Reserved.

System Settings

Item	Description
Disable Selfie	Disable Selfie prevents accidentally entering selfie mode and interrupting recording.
Orbit Follow	When enabled, the gimbal obtains smoother movements after enabling when shooting arc shots.
Auto Lock	Select whether or not to enable automated axis locks and the axis locks movement when powering on/off and entering/exiting sleep mode. ⚠ • When using DJI RS 4 Pro, make sure that the roll axis does not interfere with the pan axis before selecting Fold & Lock. Otherwise, the gimbal may be damaged.
Silent Mode	Enable to turn off sounds. The sound made by the gimbal during automatic calibration and the sound of locking/unlocking cannot be disabled.
Push Mode	Enable to manually control the tilt and pan axis.
Horiz Calibration	Try horizontal calibration or manual calibration when the gimbal is unlevel or the axis is drifting. If the gimbal is still unlevel after manual calibration, it is recommended to try again until the gimbal is level.
Gimbal Auto Check	Tap to analyze and output hardware status information of the gimbal. Tap to see details and solutions is there is any error detected.
Restore Parameters	Tap to restore gimbal parameters (joystick mode, follow mode, button function) and Bluetooth password.
Language	Supports 11 languages including Simplified Chinese, English and Traditional Chinese.
Device Info	Tap to view device information like device SN, device name, and password.
Firmware Version	Tap to view the firmware version of the gimbal and accessories.
Compliance Info	Tap to view the compliance information.

 © 2024 DJI OSMO All Rights Reserved.

Slide Up - Gimbal Settings Screen

Slide up from the bottom of the touchscreen to enter the gimbal settings screen.

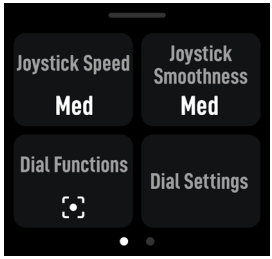

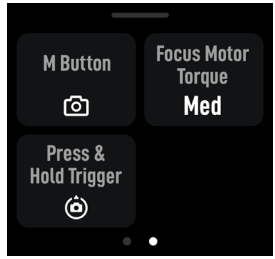

Joystick Speed	Allows users to control the speed of the joystick for the gimbal. Users can select from fast, medium, slow, and custom. Tap the icon on the top-right of the touchscreen to customize the speed. The larger the value, the faster the joystick speed.
Joystick Smoothness	Allows users to control the sensitivity of the gimbal. The lower the smoothness value, the more sensitive the movement of the gimbal.
Dial Functions	Allows users to set the function of the front dial. Users can choose to control the focus motor, Bluetooth (cable-driven) focus, ISO, aperture, shutter speed, roll axis, pan axis, and tilt axis.
Dial Settings	Allow users to set the response speed of the function set for the front dial or reverse the direction of the dial.
M Button	Allow users to take photos by default. For DJI RS 4, the function of the button can be set on the touchscreen to C1/Fn1 Button Mapping. For DJI RS 4 Pro, the function of the button can be set on the touchscreen to C1/Fn1 Button Mapping or LiDAR AF/MF. * * This requires the DJI Focus Pro LiDAR. Map the C1/Fn1 button feature of the camera: 1. Map M button to the C1 or Fn1 button of the Sony A7S3, A7M3, ZV-1 and Nikon Z50 and Z6II cameras. 2. Complete the settings on the camera for C1/Fn1 button. • The function is only available when connected to a camera via Bluetooth.
Focus Motor Torque	Tap to adjust the motor strength to high, medium, or low.
Press & Hold Trigger	The function of pressing and holding the trigger can be set to lock the gimbal or entering FPV mode.

© 2024 DJI OSMO All Rights Reserved.

Slide Left - Create Screen

Slide left from the right edge of the screen to enter the create screen.

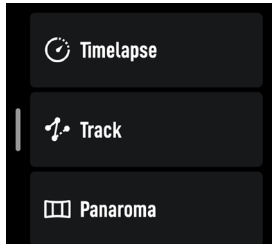

Timelapse

In Timelapse, the gimbal triggers the camera to capture still images at the set interval time and will automatically stop when completed. The duration for the Timelapse and the interval time can be set so that the gimbal can calculate the exact number of images required, and the duration of the video can be calculated after the frame rate is set.

Motionlapse allows users to set up to five waypoints so that the camera moves and shoots during the Timelapse.

Track

Track is designed to capture video with up to 10 waypoints. The waypoint needs to be selected by manually moving the gimbal or using the joystick. Tap + to add a waypoint.

The duration and stay time can be set on the waypoint settings screen after a waypoint is added and the position of the waypoint also can be reset. The duration indicates how much time it will take for the gimbal to travel from one waypoint to the next. The stay time indicates how long the gimbal will remain steady at the waypoint before moving to the next waypoint.

Panorama

Panorama allows users to capture a series of interconnecting still images with precise control based on the settings. Users can then generate a panorama using image processing software. The camera captures interconnecting still images based on the setting range when selecting 3x3 or 180° panorama. When creating a 720 VR panorama, users need to set the sensor type, lens focal length, overlap, and interval. When creating a custom panorama, users need to set the shooting range, sensor type, lens focal length, overlap, and interval.

- The interval time between shooting photos should be set to one second more than the shutter time to avoid blurred footage when using a long exposure.

 © 2024 DJI OSMO All Rights Reserved.

Slide Right - LiDAR/Video Transmission Screen (DJI RS 4 Pro)

Slide right from the left of the touchscreen to enter the LiDAR/Video Transmission screen.

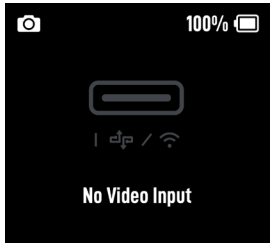

If no device is connected, “No Signal Input” will display on the screen.

ActiveTrack Pro and Force Mobile are available if the camera view is displayed on the touchscreen and the Ronin app when using the DJI Ronin Image Transmitter.

When using the DJI Focus Pro LiDAR, autofocus and ActiveTrack Pro are available.

Gimbal Follow Modes

The gimbal follow modes of DJI RS 4 and DJI RS 4 Pro include pan follow (PF), pan and tilt follow (PTF), and pan, tilt, and roll follow (FPV). FPV mode can be switched to 3D Roll 360 mode or Custom mode via the touchscreen.

- The gimbal follow modes of DJI RS 4 and DJI RS 4 Pro are the same. DJI RS 4 is used as an example below.

Gimbal Follow Mode	Description	Scenarios
PF 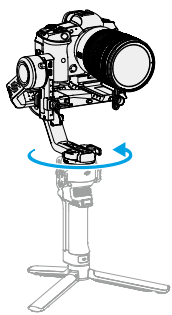	PF: Pan follow, where only the pan axis follows the movement of the grip.	Suitable for scenarios such as shooting emerging walk-through and arc shots or moving from left to right.

© 2024 DJI OSMO All Rights Reserved.

PTF 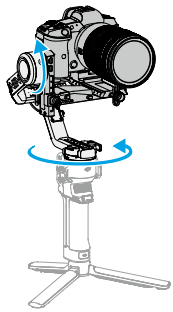	PTF: Pan and tilt follow, where both the pan and tilt axes follow the movement of the grip.	Suitable for scenarios when moving on a slant.
FPV 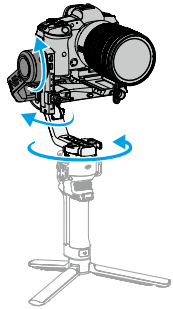	FPV: Pan, tilt, and roll follow, where all three axes follow the movement of the grip.	Suitable for scenarios when rotating the camera.
Custom	Custom: Enables or disables any axis follow as required. Lock mode is enabled when the three axes are disabled. All the three axes will not follow the movement of the grip in lock mode.	Suitable for smooth tracking shots and quick reaction shots. Custom mode is recommended for vehicle shooting scenarios. Disable 3-axis following when using this mode.
3D Roll 360	In 3D Roll 360 mode, the tilt axis is rotated 90° upwards and the camera lens is vertically upwards, at which point you can use the joystick to control the 360° rotation of the pan axis.	Suitable for rotating shots.

 © 2024 DJI OSMO All Rights Reserved.

Gimbal Operation Modes

There are four operation modes for DJI RS 4 and DJI RS 4 Pro: Upright, Underslung, Flashlight, and Briefcase.

- The gimbal operation modes of DJI RS 4 and DJI RS 4 Pro are the same. DJI RS 4 is used as an example below.

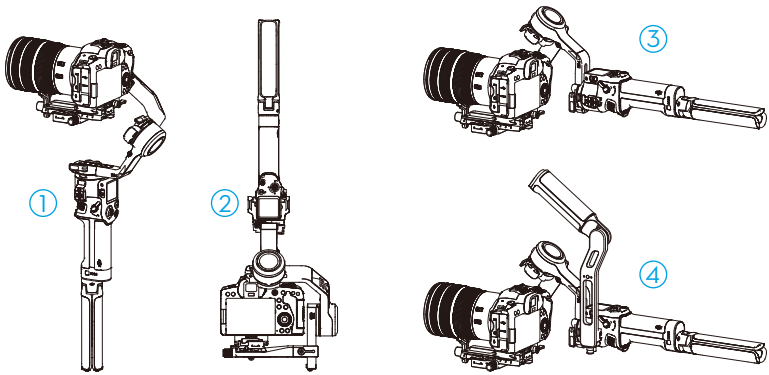

① **Upright Mode**

This is the standard working mode of the gimbal and is suitable for most shooting scenarios such as walking and running shots.

② **Underslung Mode**

The gimbal is flipped and the camera is in a lower position. This mode is suitable for taking low angle shots, such as tracking objects on the ground.

③ **Flashlight Mode**

The gimbal is held horizontally like a flashlight. This mode is suitable for shooting in confined spaces.

④ **Briefcase Mode**

The briefcase handle needs to be installed in this mode. The angle of the briefcase handle can be adjusted using the knob. The cold shoes and 1/4"-20 mounting holes of the gimbal allow for mounting external monitors to assist in shooting, making low-angle camera movements more intuitive.

© 2024 DJI OSMO All Rights Reserved.

Mount the briefcase handle to the gimbal according to the figure below.

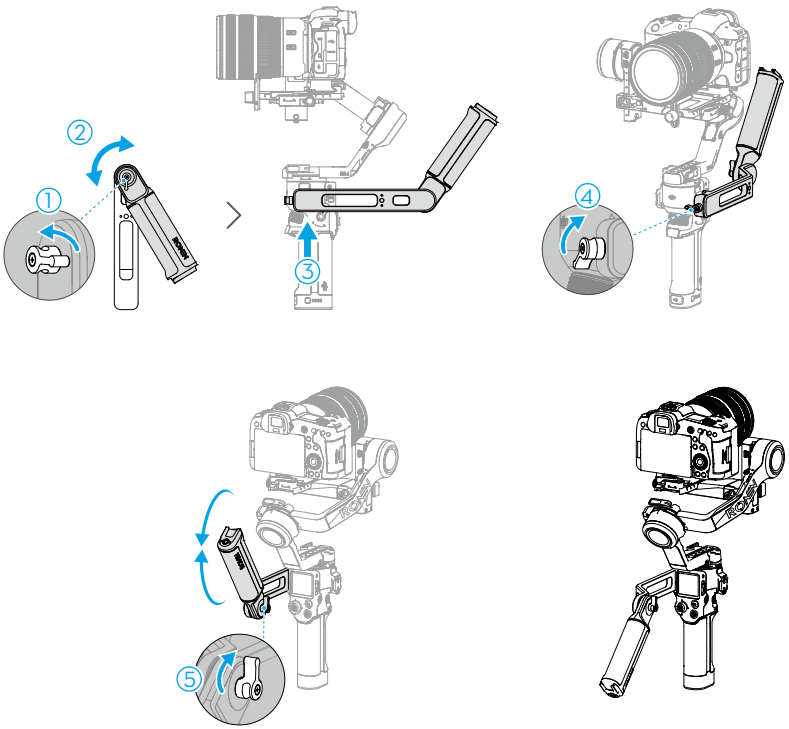

- It is recommended to mount the briefcase handle to the NATO port on the left side of the touchscreen.

© 2024 DJI OSMO All Rights Reserved.

Ronin App Settings

Users can activate the gimbal, update the firmware, use intelligent functions and image transmission using Ronin app. Motor parameters, user profile, joystick speed, and joystick direction can also be adjusted via the app. System status, user manual and the tutorial videos are also available.

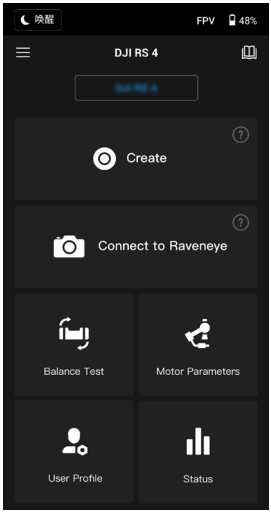

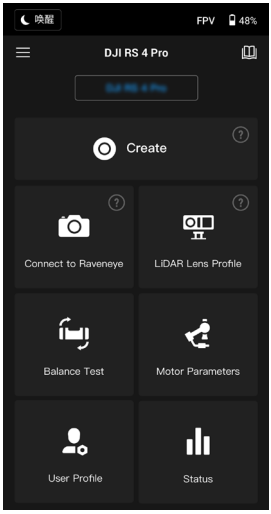

Top Bar

Sleep/Wake: Tap to enter or exit sleep mode.

FPV: Display the current follow mode.

Battery Level: Displays the battery level of the gimbal.

About

Settings: View your account, language, and the quick start guide.

Device List: Displays the device SN, device name and password.

Firmware: Displays the firmware version.

Academy

Watch the tutorials and read the manual documents.

Create

Includes virtual joystick, force mobile, panorama, timelapse, track, and gaming controller.

When the gimbal is connected to a focus motor, focus control is also included.

© 2024 DJI OSMO All Rights Reserved.

Virtual Joystick

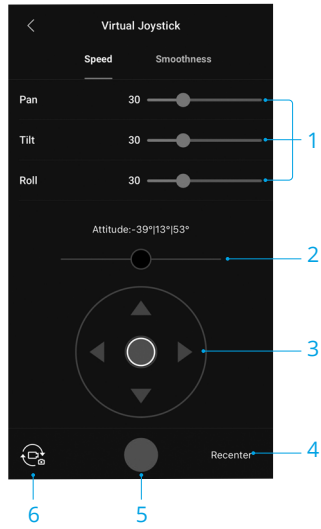

Use the virtual joystick in the app to control the movement of the gimbal and to shoot.

1. Control Bar: Control the speed and smoothness of the gimbal by adjusting the control bar. Speed allows users to adjust the remote-controlled rotational speed. Smoothness allows users to adjust the sensitivity of the gimbal. The lower the smoothness value, the more sensitive the movement of the gimbal.
2. Roll Stick: Control the roll axis movement of the gimbal using the virtual joystick.
3. Pan/Tilt Stick: Control the pan and tilt axis movement of the gimbal using the virtual joystick.
4. Recenter: Tap to recenter the gimbal.
5. Shoot/Record Button: Tap to take photos or record videos.
6. Photo/Video Toggle: Tap to switch between photo and video modes. Make sure the mode is the same as the settings on the camera.

 © 2024 DJI OSMO All Rights Reserved.

Force Mobile

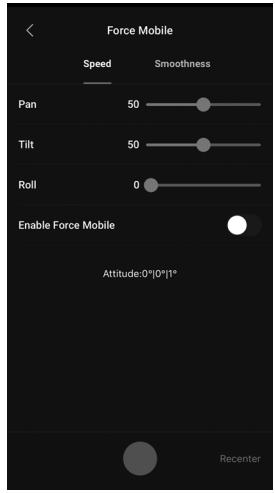

Force Mobile requires the phone holder and a mobile phone mounted on a tripod or handlebar vertically.

After enabling this feature in the Ronin app, the gimbal movement can be controlled by tilting and rotating your mobile phone.

Speed determines the relationship between the rotational speed and angle. When the speed is set to 50, the angle of rotation for the gimbal and mobile phone is 1-to-1.

Smoothness allows users to control the sensitivity of the gimbal. The lower the smoothness value, the more sensitive the movement of the gimbal.

Recenter: Tap to recenter the gimbal.

Shutter/Record Button: Tap to take photos or record videos.

© 2024 DJI OSMO All Rights Reserved.

Panorama

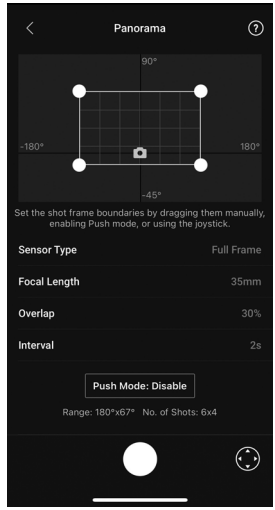

Panorama allows users to capture a series of interconnecting still images with precise control based on the sensor type, lens focal length, overlap, and interval.

Make sure you have connected the camera and gimbal using the corresponding camera control cable before using Panorama (Bluetooth connection is not supported).

Overlap determines the overlap ratio of every photo when generating a panorama.

The interval time between shooting photos should be set to one second more than the shutter time to avoid blurred footage when using a long exposure.

After confirming the camera settings, the panorama range can be set by dragging the white dots on the grid map, pushing the gimbal manually, or using the virtual joystick.

The total range covered by the endpoints and the shots required to compose the panorama is displayed above the grid map. The tilt axis range in Panorama is -45° to +90° in order to avoid capturing the gimbal in the shot, while the pan axis allows you to capture a full 360° rotation.

Tap the shutter/record button to begin.

 © 2024 DJI OSMO All Rights Reserved.

Timelapse

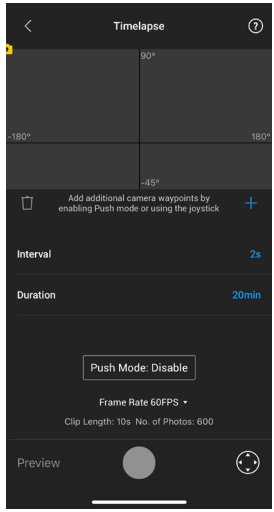

In Timelapse, the gimbal triggers the camera to capture still images with the set interval time and will automatically stop when completed. The duration for the Timelapse and the frame rate can be set so that the gimbal can calculate the exact number of images required.

By enabling Push mode, users can manually adjust the pan and tilt axes before starting the Timelapse. Users can push the gimbal to alter the camera orientation and adjust the framing. Tap the virtual joystick icon to use the virtual joystick to adjust the camera orientation.

Motionlapse allows users to set up to five waypoints so that the camera moves during the Timelapse.

To adjust the position of a waypoint, adjust the camera to the desired position, and tap the + icon to confirm the waypoint. You can also use the virtual joystick to control the pan, tilt, and roll axis as well.

To add another waypoint, move the gimbal to the next waypoint, and tap the + icon above the grid map. Afterwards, to delete a waypoint, select the waypoint and tap the trash icon. After setting up the waypoints, you can either tap Preview to make sure the Motionlapse includes everything or tap the shutter/record button to start shooting. Make sure the camera and gimbal have been connected using the corresponding camera control cable.

© 2024 DJI OSMO All Rights Reserved.

Track

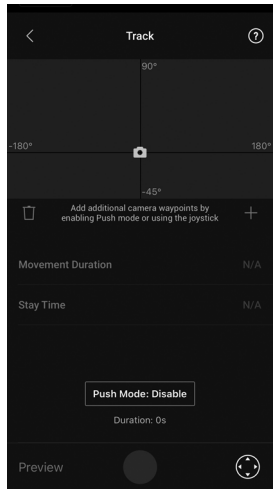

Track is designed to capture video with up to 10 waypoints. Users need to select the waypoint manually by moving the gimbal or using the virtual joystick. Tap + to add a waypoint. The duration and stay time can be set on the waypoint settings screen after a waypoint is added and the position of the waypoint also can be reset. The duration parameter below the grid map indicates how much time it will take for the gimbal to travel from one waypoint to the next. The stay time indicates how long the gimbal will remain steady at the waypoint before moving to the next waypoint.

⚠ • DO NOT press the shutter button of the camera while using Track.

 © 2024 DJI OSMO All Rights Reserved.

Gaming Controller

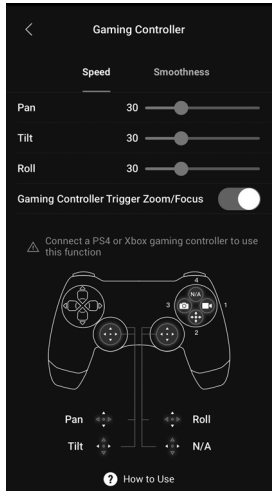

PS4 DualShock and Xbox controllers can be used to control the gimbal and camera. After connecting the controller to the mobile device and gimbal, users can control gimbal movements, focus, and zoom, and can record videos, recenter gimbal, and capture photos.

The speed and smoothness of the control sticks can be adjusted. Set the focus value within 10 on the camera settings for optimal performance. iOS 13 or higher, Android 9.0 or higher, and Ronin app v1.7.0 or higher are required.

Tap How to Use to learn more about the gaming controller.

© 2024 DJI OSMO All Rights Reserved.

Image Transmission

With the DJI Ronin Image Transmitter mounted, tap Connect to RavenEye on the homescreen of the Ronin app to use the image transmission feature.

LiDAR Lens Profile (DJI RS 4 Pro)

Lens can be calibrated and flange distance can be adjusted in LiDAR Lens Profile. Refer to Installation and Use of the DJI Focus Pro Motor and LiDAR for details.

Balance Test

Watch the tutorial videos on this page.

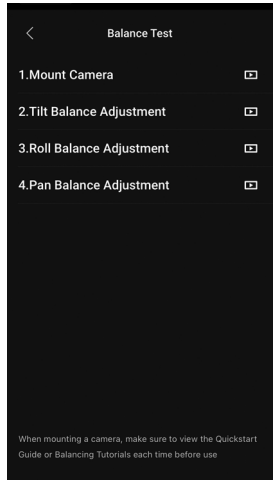

 © 2024 DJI OSMO All Rights Reserved.

Motor Parameters

There are Basic and Advanced menus. Stiffness can be displayed and adjusted in the Basic menu. In addition, Strength can be adjusted in the Advanced menu (do not adjust if not necessary).

Tap Auto Tune and the gimbal automatically calculates the result based on the weight of the gimbal setup.

After calibration, you can see detailed motor diagnostics at the bottom of the screen. If the gimbal is properly balanced, the power value of the motors should be in the range of ±5. If power consumption on a particular axis constantly goes beyond that range, check the mechanical balance of the gimbal.

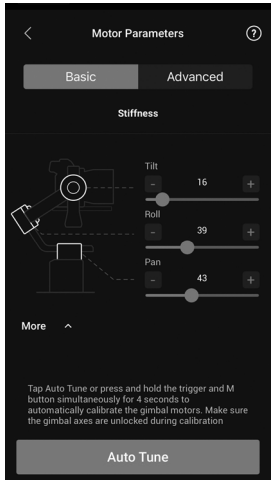

© 2024 DJI OSMO All Rights Reserved.

User Profile

Gimbal mode, follow speed, deadband, push mode and joystick control can be set in this page.

Deadband determines how much movement the gimbal tolerates prior to translating the pan, tilt, and roll movement of the camera.

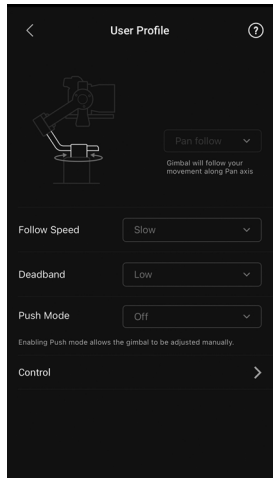

 © 2024 DJI OSMO All Rights Reserved.

Control Settings

Channels	The channel indicator provides feedback when configuring remote operation. Pan, tilt, and roll channels can be reassigned and each axis can also be inverted. Normal means the direction of movement is the same as the joystick. Inverted means the direction of movement is the opposite of the joystick. When using the joystick, you can only control CH1 and CH3, which is mapped to tilt and pan axes by default. You can customize channel mapping by tapping on the name of the axis on the right of the screen.
Motion	You can set the joystick control by adjusting deadband, max speed, smoothness, and endpoints for each axis. There are three default profiles for each setting.
Deadband	when the deadband value increases, more stick movement will be required to translate into the actual movement of the gimbal.
Max Speed	Allows the remote-controlled rotational speed to be adjusted.
Smoothness	Allows you to control the sensitivity of the gimbal.
Endpoint	Limits the rotational range of the gimbal by setting the endpoints. The pan axis has a slip-ring, enabling the gimbal to rotate continuously when the endpoints are set to 180°. On the tilt axis, you can set up the endpoints according to your requirements. Some longer lenses may hit the gimbal frame. Set the endpoint angle to prevent such cases.

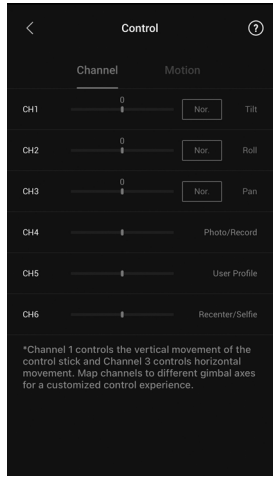

© 2024 DJI OSMO All Rights Reserved.

Status

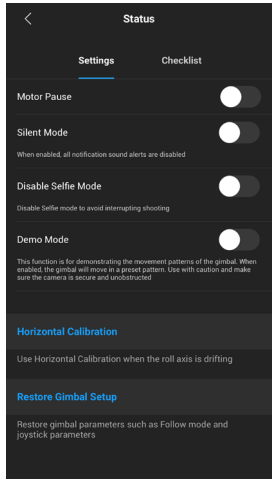

Settings

Use more features such as Motor Pause, Silent Mode, Horizontal Calibration, and Restore Gimbal Setup.

Checklist

Displays the connection status of the Bluetooth and camera. When the gimbal status is abnormal, the status information is displayed here.

 © 2024 DJI OSMO All Rights Reserved.

Grip and Built-In Battery

DJI RS 4 is equipped with the BG21 grip with a built-in 3000 mAh battery that gives the gimbal a maximum running time of about 12 hours [1]. DJI RS 4 Pro is equipped with the BG30 grip with a built-in 1950 mAh battery that gives the gimbal a maximum running time of about 13 hours [1]. Both gimbals are compatible with the BG70 High-Capacity Battery Grip, which extends the running time of DJI RS 4 and DJI RS 4 Pro to 29.5 hours and 29 hours respectively [2], providing uninterrupted power support for long-duration shooting tasks.

[1] Measured with the gimbal balanced in a level and stationary state. When the gimbal is in motion, the operating time will be reduced.

[2] Measured at 24° C in a laboratory environment with the gimbal balanced in a level and stationary state, for reference only.

Safety Guidelines

WARNING Procedures, which if not properly followed, create the probability of property damage, collateral damage, and serious injury OR create a high probability of superficial injury.

NOTICE Procedures, which if not properly followed, create a possibility of physical property damage AND a little or no possibility of injury.

⚠ WARNING

Read the user manual to become familiar with the features of this product before operating. Failure to operate the product correctly can result in damage to the product, personal property, and cause serious injury. This is a sophisticated product. It must be operated with caution and common sense and requires some basic mechanical ability. Failure to operate this product in a safe and responsible manner could result in injury or damage to the product or other property.

This product is not intended for use by children without direct adult supervision. Do not use with incompatible components or alter this product in any way outside of the documents provided by SZ DJI TECHNOLOGY CO.,LTD. These Safety Guidelines contain instructions for safety, operation and maintenance. It is essential to read and follow all of the instructions and warnings in the user manual, prior to assembly, setup or use, in order to operate the product correctly and avoid damage or serious injury.

To avoid fire, serious injury, and property damage, observe the following safety guidelines when using, charging, or storing the grip.

WARNING

Grip Use

1. DO NOT allow the grip to come into contact with any kind of liquid. DO NOT leave the grip out in the rain or near a source of moisture. DO NOT drop the grip into water. If the inside of the battery comes into contact with water, chemical decomposition may occur, potentially resulting in the battery catching on fire, and may even lead to an explosion.
2. If the grip falls into water by accident, put it in a safe and open area immediately. Maintain a safe distance from the grip until it is completely dry. DO NOT use the grip again, and dispose of the grip properly as described in the Grip Disposal section.

© 2024 DJI OSMO All Rights Reserved.

3. Put out any fire using water, sand, fire blanket, or a dry powder fire extinguisher.
4. DO NOT use non-DJI batteries. Go to www.dji.com to purchase new batteries. DJI takes no responsibility for any damage caused by non-DJI batteries.
5. DO NOT use or charge a swollen, leaky, or damaged grip. If the grip is abnormal, contact DJI or a DJI authorized dealer for further assistance.
6. The grip should be used in temperatures from -20° to 45° C (-4° to 113° F). Use of the grip in environments above 50° C (122° F) can lead to a fire or explosion. Use of grip below -10° C (14° F) can lead to permanent damage.
7. DO NOT use the grip in strong electrostatic or electromagnetic environments. Otherwise, the battery control board may malfunction.
8. DO NOT disassemble or pierce the grip in any way or the battery may leak, ignite, or explode.
9. DO NOT drop or strike batteries. DO NOT place heavy objects on the grip.
10. Electrolytes in the battery are highly corrosive. If any electrolytes make contact with your skin or eyes, immediately wash the affected area with fresh running water for at least 15 minutes, and then see a doctor immediately.
11. DO NOT use the grip if dropped.
12. DO NOT heat batteries. DO NOT put the grip in a microwave oven or in a pressurized container.
13. DO NOT manually short-circuit the grip.
14. Clean grip terminals with a clean, dry cloth.

Grip Charging

1. DO NOT leave the grip unattended during charging. DO NOT charge the grip near flammable materials or on flammable surfaces such as carpet or wood.
2. Charging the grip outside of the temperature range of 5° to 40° C (41° to 104° F) may lead to leakage, overheating, or battery damage. The ideal charging temperature is 22° to 28° C (72° to 82° F).

Grip Storage

1. Keep the grip out of the reach of children and animals.
2. If the grip will be stored for an extended period, charge the grip until the battery level reaches between 30% and 50%.
3. DO NOT leave the grip near heat sources such as a furnace or heater. DO NOT leave the grip inside of a vehicle on hot days. The ideal storage temperature is 22° to 28° C (72° to 82° F).
4. Keep the grip dry.

Grip Maintenance

1. DO NOT use the grip when the temperature is too high or too low.
2. DO NOT store the battery in environments with a temperature higher than 45° C (113° F) or lower than 0° C (32° F).

 © 2024 DJI OSMO All Rights Reserved.

Travel Notice

1. Before carrying the grip on an airline flight, it must first be discharged until the battery level is lower than 30%. Only discharge the grip in a fireproof location and store the grip in a ventilated location.
2. Keep the grip away from metal objects such as glasses, watches, jewelry, and hairpins.
3. DO NOT transport a damaged grip or a grip with battery level higher than 30%.

Grip Disposal

Dispose of the grip in specific recycling boxes only after a complete discharge. DO NOT place the grip in regular trash containers. Strictly follow your local regulations regarding the disposal and recycling of batteries.

NOTICE

Grip Use

1. Make sure the grip is fully charged before use.
2. If a low-battery warning appears, charge the grip as soon as possible.

Grip Charging

1. The grip is designed to stop charging when it is full. It is good practice, however, to monitor the charging progress and disconnect the grip when fully charged.

Grip Storage

1. Discharge the grip to 40%-65% if it will not be used for 10 days or more. This can greatly extend the battery life.
2. If the grip is stored for an extended period and the battery is depleted, the grip will enter sleep mode. Recharge the grip to exit sleep mode.
3. Remove the grip from the gimbal when stored for an extended period.

Grip Maintenance

1. Battery life may be reduced if not used for an extended period.
2. Discharge and charge the grip completely once every three months to keep it in good condition.

Grip Disposal

1. If the grip is disabled and the battery cannot be fully discharged, contact a professional battery disposal or recycling agent for further assistance.
2. Dispose of the grip immediately if it cannot be powered on after over-discharging.

© 2024 DJI OSMO All Rights Reserved.

Maintenance

The gimbal is not waterproof. Make sure to protect it from dust and water during use. After use, it is recommended to wipe the gimbal with a soft dry cloth. DO NOT spray any cleaning liquids onto the gimbal.

Specifications

	DJI RS 4	DJI RS 4 Pro
Peripheral		
Accessory Port	Ronin Series Accessories (RSA)/ NATO Ports	Ronin Series Accessories (RSA)/ NATO Ports
	1/4"-20 Mounting Hole	1/4"-20 Mounting Hole
	Cold Shoe	Cold Shoe
	Video Transmission Port (USB-C)	Video Transmission/LiDAR Range Finder Port (USB-C)
	RSS Camera Control Port (USB-C)	RSS Camera Control Port (USB-C)
	Focus Motor Port (USB-C)	Focus Motor Port (USB-C)
Battery	Model: BHX711-3000-7.2V	Model: BG30-1950mAh-15.4V
	Type: LiPo 2S	Type: LiPo 4S
	Capacity: 3000 mAh	Capacity:1950 mAh
	Energy: 21 Wh	Energy: 30 Wh
	Max Runtime: 12 hours [1]	Max Runtime: 13 hours [1]
	Charging Time: Approx. 2.5 hours [2]	Charging Time: Approx. 1.5 hours [3]
	Suggested Charging Temperature: 5° to 40° C (41° to 104° F)	Suggested Charging Temperature: 5° to 40° C (41° to 104° F)
Connections	Bluetooth 5.1	Bluetooth 5.1
	Charging Port (USB-C)	Charging Port (USB-C)
Ronin App Requirements	iOS 11.0 or above	iOS 11.0 or above
	Android 8.0 or above	Android 8.0 or above
Languages Supported	English, Simplified Chinese, Traditional Chinese, German, French, Korean, Japanese, Spanish, Portuguese (Brazil), Russian, Thai	English, Simplified Chinese, Traditional Chinese, German, French, Korean, Japanese, Spanish, Portuguese (Brazil), Russian, Thai

 © 2024 DJI OSMO All Rights Reserved.

Working Performance		
Tested Payload	3 kg (6.6 lbs)	4.5 kg (10 lbs)
Maximum Controlled Rotation Speed	Pan: 360°/ s	Pan: 360°/ s
	Tilt: 360°/ s	Tilt: 360°/ s
	Roll: 360°/ s	Roll: 360°/ s
Mechanical Range	Pan Axis: 360° continuous rotation	Pan Axis: 360° continuous rotation
	Roll Axis: -95° to +240°	Roll Axis: -95° to +240°
	Tilt axis: -112° to +214°	Tilt axis: -112° to +214°
Mechanical & Electrical Properties		
Operating Frequency	2.4000-2.4835 GHz	2.4000-2.4835 GHz
Bluetooth Transmitter Power	<8 dBm	<8 dBm
Operating Temperature	-20° to 45° C (-4° to 113° F)	-20° to 45° C (-4° to 113° F)
Weight	Gimbal: Approx. 1066 g (2.35 lbs)	Gimbal: Approx. 1242 g (2.74 lbs)
	Grip: Approx. 203 g (0.45 lbs)	Grip: Approx. 265 g (0.58 lbs)
	Extended Grip/Tripod (Plastic): Approx. 183 g (0.4 lbs)	Extended Grip/Tripod (Metal): Approx. 226 g (0.49 lbs)
	Upper and Lower Quick-Release Plates: Approx. 98 g (0.22 lbs)	Upper and Lower Quick-Release Plates: Approx. 110 g (0.24 lbs)
Dimensions	Folded: 245×255×75 mm (L×W×H, excluding camera, grip, and the Extended Grip/Tripod)	Folded: 271×283×75 mm (L×W×H, excluding camera, grip, and the Extended Grip/Tripod)
	Unfolded: 370×191×189 mm (L×W×H, height includes grip and excludes the Extended Grip/Tripod)	Unfolded: 416×223×202 mm (L×W×H, height includes grip and excludes the Extended Grip/Tripod)

[1] Measured with the gimbal balanced in a level and stationary state. When the gimbal is in motion, the operating time will be reduced.

[2] Measured with a charger supporting 18 W fast charging. It is recommended to use chargers supporting PD protocol.

[3] Measured with a charger supporting 24 W fast charging. It is recommended to use chargers supporting QC 2.0 or PD protocol.

© 2024 DJI OSMO All Rights Reserved.

WE ARE HERE FOR YOU

Contact
DJI SUPPORT

This content is subject to change without prior notice.

https://www.dji.com/rs-4/downloads
https://www.dji.com/rs-4-pro/downloads

If you have any questions about this document, please contact DJI by sending a message to **DocSupport@dji.com**.

DJI is a trademark of DJI.
Copyright © 2024 DJI OSMO All Rights Reserved.