Form No. 3478-110 Rev A

TORO®

Count on it.

Operator's Manual

# TRX-250 and TRX-300 Trencher

**Model No. 22983—Serial No. 417120638 and Up**
**Model No. 22983G—Serial No. 417000000 and Up**
**Model No. 22983HD—Serial No. 400000000 and Up**
**Model No. 22984—Serial No. 417025991 and Up**
**Model No. 22984HD—Serial No. 417900000 and Up**

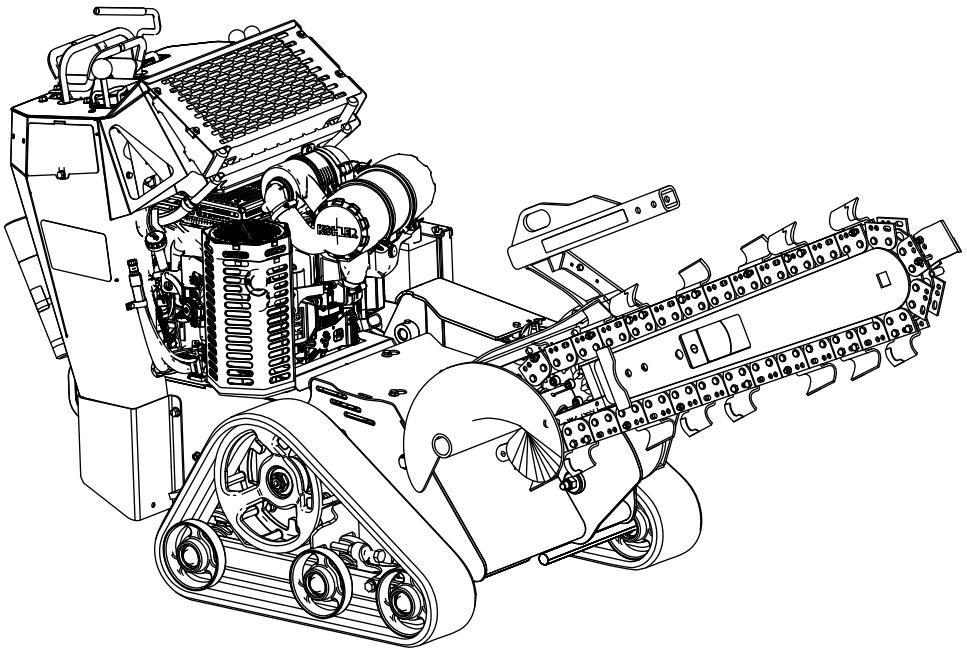

Register at www.Toro.com.
Original Instructions (EN)

CE UK CA

*3478-110*

This product complies with all relevant European directives; for details, please see the separate product specific Declaration of Conformity (DOC) sheet.

It is a violation of California Public Resource Code Section 4442 or 4443 to use or operate the engine on any forest-covered, brush-covered, or grass-covered land unless the engine is equipped with a spark arrester, as defined in Section 4442, maintained in effective working order or the engine is constructed, equipped, and maintained for the prevention of fire.

The enclosed engine owner's manual is supplied for information regarding the US Environmental Protection Agency (EPA) and the California Emission Control Regulation of emission systems, maintenance, and warranty. Replacements may be ordered through the engine manufacturer.

***Important:*** **If you are using a machine with a Toro engine above 1500 m (5,000 ft) for a continuous period, ensure that the High Altitude Kit has been installed so that the engine meets CARB/EPA emission regulations. The High Altitude Kit increases engine performance while preventing spark-plug fouling, hard starting, and increased emissions. Once you have installed the kit, attach the high-altitude label next to the serial decal on the machine. Contact any Authorized Service Dealer to obtain the proper High Altitude Kit and high-altitude label for your machine. To locate a dealer convenient to you, access our website at www.Toro.com or contact our Toro Customer Care Department at the number(s) listed in your Emission Control Warranty Statement.**

**Remove the kit from the engine and restore the engine to its original factory configuration when running the engine under 1500 m (5,000 ft). Do not operate an engine that has been converted for high-altitude use at lower altitudes; otherwise, you could overheat and damage the engine.**

**If you are unsure whether or not your machine has been converted for high-altitude use, look for the following label.**




decal127-9363

**⚠ WARNING**

**CALIFORNIA**
**Proposition 65 Warning**

**The engine exhaust from this product contains chemicals known to the State of California to cause cancer, birth defects, or other reproductive harm.**

**Battery posts, terminals, and related accessories contain lead and lead compounds, chemicals known to the State of California to cause cancer and reproductive harm. Wash hands after handling.**

**Use of this product may cause exposure to chemicals known to the State of California to cause cancer, birth defects, or other reproductive harm.**

# Introduction

This machine is designed primarily to dig trenches in soil to bury cabling and piping for various applications. It is not intended to cut wood or any material other than soil. Using this product for purposes other than its intended use could prove dangerous to you and bystanders. Do not modify the machine or attachments.

This machine should be operated, serviced, and repaired only by professionals familiar with its characteristics and acquainted with the relevant safety procedures.

Operate this machine in ambient temperatures from -7°C to 38°C (20°F to 100°F). Contact your Authorized Service Dealer for provisions required for operating in extreme temperatures.

Read this information carefully to learn how to operate and maintain your product properly and to avoid injury and product damage. You are responsible for operating the product properly and safely.

Visit www.Toro.com for product safety and operation training materials, accessory information, help finding a dealer, or to register your product.

Whenever you need service, genuine Toro parts, or additional information, contact an Authorized Service Dealer or Toro Customer Service and have the model and serial numbers of your product ready. Figure 1 illustrates the location of the model and serial

© 2025—The Toro® Company
8111 Lyndale Avenue South
Bloomington, MN 55420



Contact us at www.Toro.com.
Printed in the USA
All Rights Reserved

numbers on the product. Write the numbers in the space provided.

***Important:*** **With your mobile device, you can scan the QR code on the serial number decal (if equipped) to access warranty, parts, and other product information.**

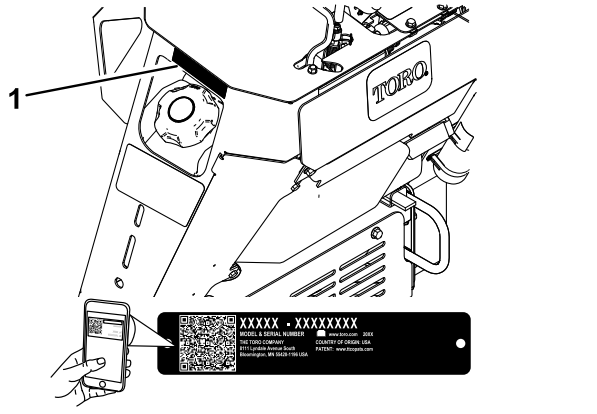


g272571

**Figure 1**

1. Model and serial number plate

**Model No.** _____

**Serial No.** _____

This manual identifies potential hazards and has safety messages identified by the safety-alert symbol (Figure 2), which signals a hazard that may cause serious injury or death if you do not follow the recommended precautions.



g000502

**Figure 2**

1. Safety-alert symbol

This manual uses 2 words to highlight information. **Important** calls attention to special mechanical information and **Note** emphasizes general information worthy of special attention.

# Contents


Safety ..... 4
General Safety ..... 4
Safety and Instructional Decals ..... 5
Setup ..... 12
1 Installing the Boom and Chain ..... 12
2 Installing the Safety Bar ..... 13
3 Installing the Crumber Extension Bar ..... 14
4 Checking the Fluid Levels ..... 14
5 Charging the Battery ..... 14
Product Overview ..... 15
Controls ..... 15
Specifications ..... 17
Attachments/Accessories ..... 17
Before Operation ..... 18
Before Operation Safety ..... 18
Adding Fuel ..... 18
Performing Daily Maintenance ..... 19
During Operation ..... 19
During Operation Safety ..... 19
Starting the Engine ..... 21
Driving the Machine ..... 21
Shutting off the Engine ..... 21
Digging a Trench ..... 22
Operating Tips ..... 22
After Operation ..... 23
After Operation Safety ..... 23
Securing the Machine for Transport ..... 23
Lifting the Machine ..... 24
Maintenance ..... 25
Maintenance Safety ..... 25
Recommended Maintenance Schedule(s) ..... 25
Pre-Maintenance Procedures ..... 27
Removing the Cover Plate ..... 27
Removing the Bottom Shield ..... 27
Lubrication ..... 28
Greasing the Machine ..... 28
Greasing the Trencher Housing ..... 28
Engine Maintenance ..... 29
Engine Safety ..... 29
Identifying the Engine ..... 29
Servicing a Kohler® Engine ..... 29
Servicing a Toro Engine ..... 34
Fuel System Maintenance ..... 38
Using the Fuel-Shutoff Valve ..... 38
Draining the Fuel Tank ..... 38
Replacing the Fuel Filter ..... 39
Electrical System Maintenance ..... 39
Electrical System Safety ..... 39
Servicing the Battery ..... 39
Replacing the Fuses ..... 42
Drive System Maintenance ..... 42
Servicing the Tracks ..... 42
Brake Maintenance ..... 45
Testing the Parking Brake ..... 45
Hydraulic System Maintenance ..... 46

Hydraulic System Safety ..... 46
Hydraulic Fluid Specifications ..... 46
Checking the Hydraulic-Fluid Level ..... 46
Replacing the Hydraulic Filter ..... 47
Changing the Hydraulic Fluid ..... 47
Trencher Maintenance ..... 48
Replacing the Digging Teeth ..... 48
Checking and Adjusting the Digging Chain and Boom ..... 48
Replacing the Drive Sprocket ..... 49
Cleaning ..... 50
Removing Debris from the Machine ..... 50
Storage ..... 51
Troubleshooting ..... 52

# Safety

## General Safety

**⚠ DANGER**

**There may be buried utility lines in the work area. Digging into them may cause a shock or an explosion.**

**Have the property or work area marked for buried lines and do not dig in marked areas. Contact your local marking service or utility company to have the property marked (for example, in the US, call 811 or in Australia, call 1100 for the nationwide marking service).**

This product is capable of amputating hands and feet. Always follow all safety instructions to avoid serious injury or death.

- Have the property or work area marked for buried lines and other objects, and do not dig in marked areas.
- Keep your hands and feet away from moving teeth, auger, or other parts.
- Keep bystanders and pets away from the machine.
- Read and understand the content of this *Operator's Manual* before starting the engine.
- Never allow children or untrained people to operate the machine.
- Do not operate the machine without the guards and other safety protective devices in place and working on the machine.
- Use your full attention while operating the machine. Do not engage in any activity that causes distractions; otherwise, injury or property damage may occur.
- Stop the machine, shut off the engine, and remove the key before servicing, fueling, or unclogging the machine.

Improperly using or maintaining this machine can result in injury. To reduce the potential for injury, comply with these safety instructions and always pay attention to the safety-alert symbol ⚠, which means Caution, Warning, or Danger—personal safety instruction. Failure to comply with these instructions may result in personal injury or death.

# Safety and Instructional Decals

Safety decals and instructions are easily visible to the operator and are located near any area of potential danger. Replace any decal that is damaged or missing.

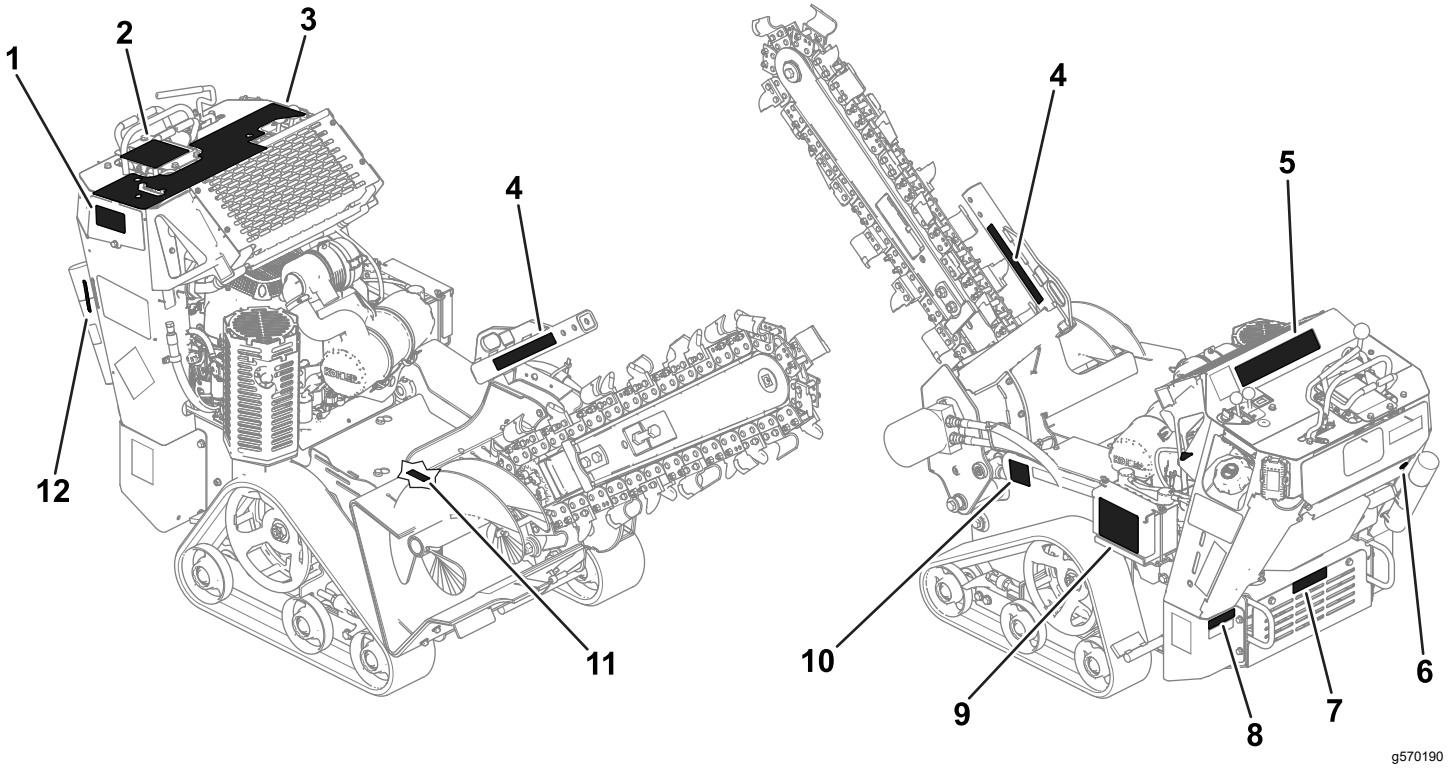


**Figure 4**

Safety decal locations—TRX-250 shown

| | | | |
|---|---|---|---|
| 1. 138-7154 | 4. 99-9952 | 7. 93-7814 | 10. 100-4650 |
| 2. 138-7107 | 5. 138-7104 | 8. 133-8062 | 11. 93-6686 |
| 3. 138-7105 | 6. 107-8495 | 9. 137-3882 | 12. 139-1271 |




decalbatterysymbols

### Battery Symbols

Some or all of these symbols are on your battery.

1. Explosion hazard
2. No fire, open flame, or smoking
3. Caustic liquid/chemical burn hazard
4. Wear eye protection.
5. Read the *Operator's Manual*.
6. Keep bystanders away from the battery.
7. Wear eye protection; explosive gases can cause blindness and other injuries.
8. Battery acid can cause blindness or severe burns.
9. Flush eyes immediately with water and get medical help fast.
10. Contains lead; do not discard

---

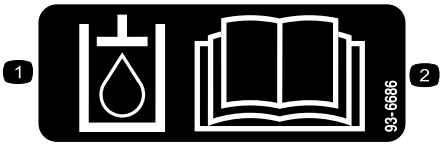


decal93-6686

### 93-6686

1. Hydraulic fluid
2. Read the *Operator's Manual*.

---

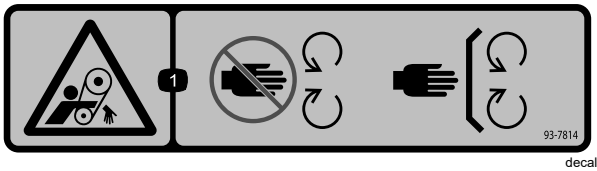


decal93-7814

### 93-7814

1. Entanglement hazard, belt—stay away from moving parts; keep all guards and shields in place.

---

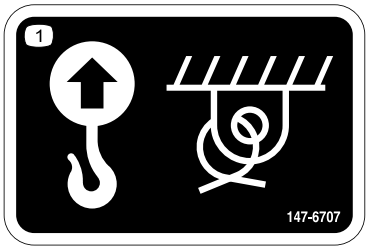


decal147-6707

### 147-6707

1. Lift point and tie-down point

---

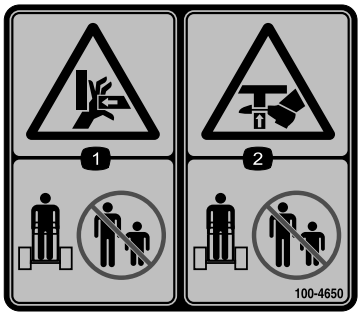


decal100-4650

### 100-4650

1. Crushing hazard of hand—keep bystanders away.
2. Crushing hazard of foot—keep bystanders away.

---




decal107-8495

### 107-8495

1. Parking brake

---

Decal 131-1097 is for machines with a Toro engine only.

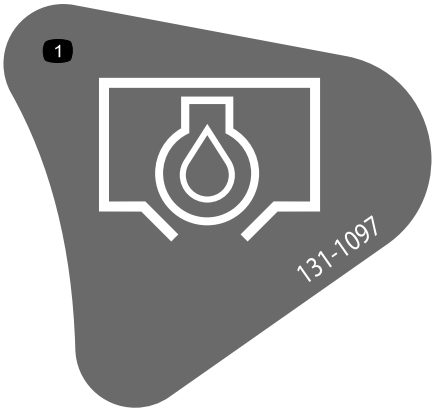


decal131-1097

**131-1097**

1. Oil drain

---




decal133-8062

**133-8062**

---

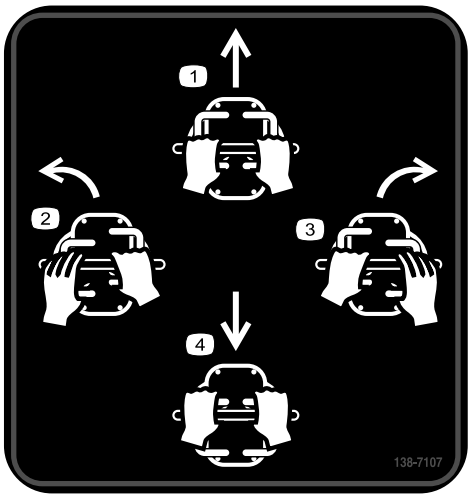


decal138-7107

**138-7107**

1. Forward
2. Left
3. Right
4. Reverse

---

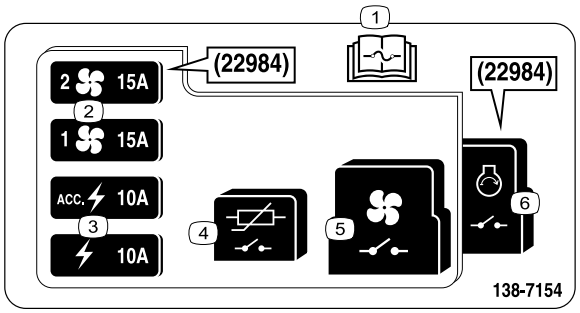


decal138-7154

**138-7154**

1. Read the *Operator's Manual* for fuse information.
2. Fan
3. Electric
4. Magneto relay
5. Fan relay
6. Ignition relay

---




decal139-1271

**139-1271**

1. Parking brake—Engage
2. Parking brake—Disengage

---

Decal 137-3882 is for TRX-250 models only.

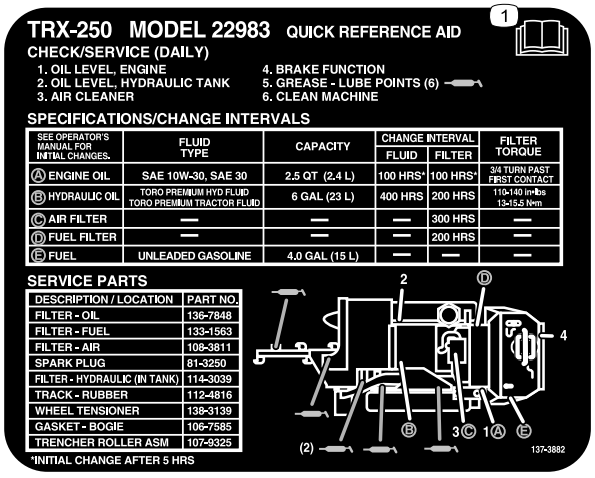


decal137-3882

**137-3882**

1. Read the *Operator's Manual*.

Decal 138-7155 is for TRX-300 models only.

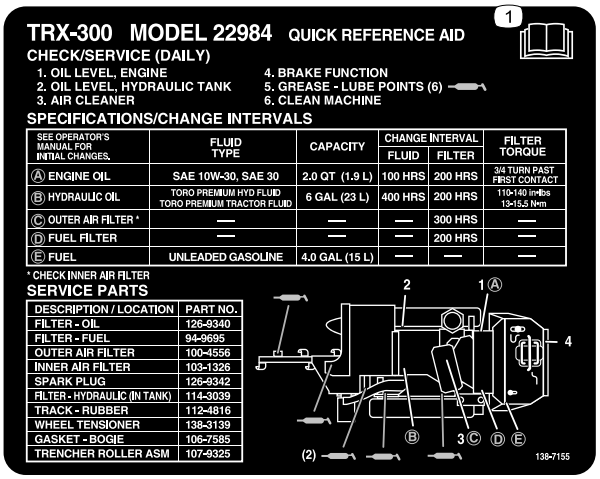


decal138-7155

**138-7155**

1. Read the *Operator's Manual*.

Decal 161-7275 is for Model 22983HD and 22984HD only.

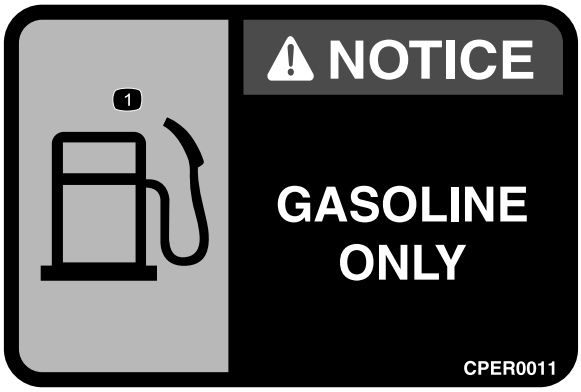


decal161-7275

**161-7275**

1. Fuel




decal99-9952

**99-9952**

1. Cutting/dismemberment hazard, auger and chain—keep bystanders away; stay away from moving parts.
2. Warning—remove the key before performing maintenance.
3. Explosion hazard; electrical shock hazard—do not operate if power lines may be present.

---

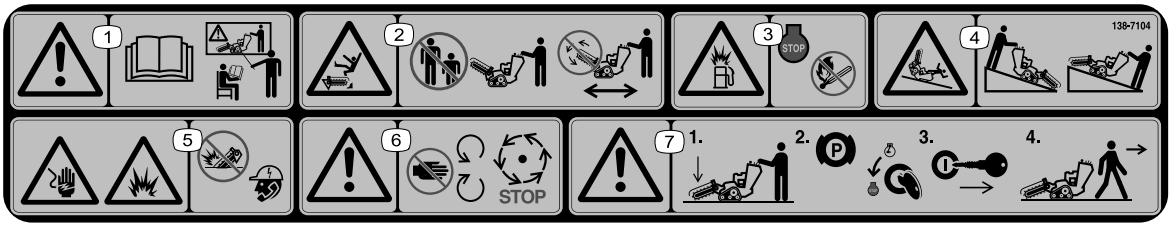


decal138-7104

**138-7104**

1. Warning—read the *Operator's Manual*; do not operate this machine unless you are trained.
2. Cutting/dismemberment hazard of the leg, trencher—keep bystanders away; do not operate the trencher chain while transporting the machine.
3. Explosion hazard, fueling—shut off the engine and extinguish all flames when fueling.
4. Tipping/crushing hazard—lower the boom when operating on slopes.
5. Electrical shock hazard; explosion hazard—do not operate if power lines may be present; call your local utility company.
6. Warning—stay away from moving parts; wait for all moving parts to stop.
7. Warning—lower the boom, engage the parking brake, shut off the engine, and remove the key before leaving the machine.

---

Decal 138-7105 is for TRX-250 models only.

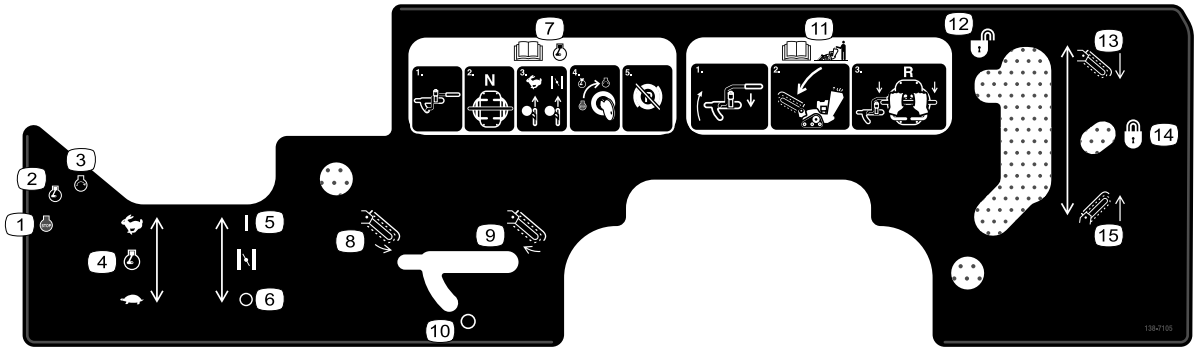


decal138-7105

**138-7105**

1. Engine—Shut off
2. Engine—Run
3. Engine—Start
4. Engine speed
5. Choke—On
6. Choke—Off
7. Read the *Operator's Manual* for information on starting the engine—move the trencher-control lever to the OFF position; place the traction control in the Neutral position; move the throttle lever to the Fast position and engage the choke; turn the key to the Run position; disengage the parking brake.
8. Trencher chain—Reverse
9. Trencher chain—Forward
10. Off
11. Read the *Operator's Manual* for information on operating the machine—move the trencher-control lever to the reference bar; lower the trencher boom; pull the traction control rearward.
12. Unlock
13. Lower the boom.
14. Lock
15. Raise the boom.

Decal 138-7106 is for TRX-300 models only

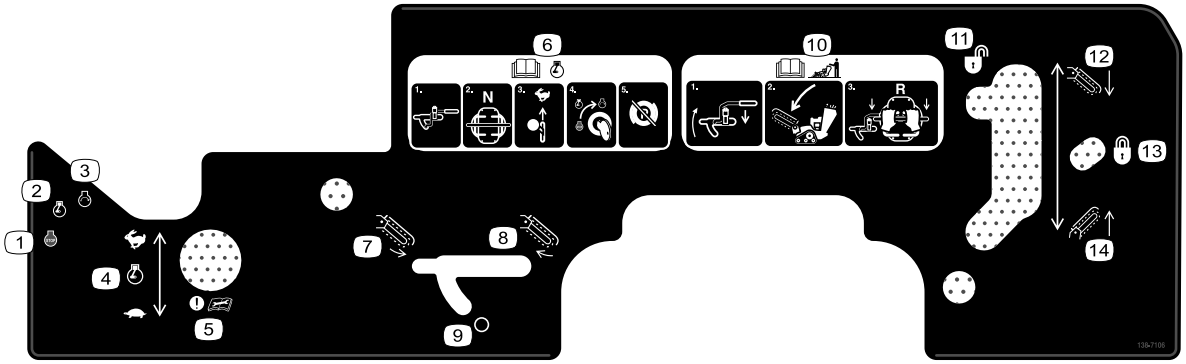


decal138-7106

**138-7106**

1. Engine—Shut off
2. Engine—Run
3. Engine—Start
4. Engine speed
5. Attention—read the *Operator's Manual* before performing maintenance.
6. Read the *Operator's Manual* for information on starting the engine—move the trencher-control lever to the OFF position; place the traction control in the Neutral position; move the throttle lever to the Fast position; turn the key to the Run position; disengage the parking brake.
7. Trencher chain—Reverse
8. Trencher chain—Forward
9. Off
10. Read the *Operator's Manual* for information on operating the machine—move the trencher-control lever to the reference bar; lower the trencher boom; pull the traction control rearward.
11. Unlock
12. Lower the boom.
13. Lock
14. Raise the boom.

# Setup

## Loose Parts

Use the chart below to verify that all parts have been shipped.

| Procedure | Description | Qty. | Use |
|---|---|---|---|
| 1 | Boom (sold separately)<br>Chain (sold separately) | 1<br>1 | Install the boom and chain. |
| 2 | Safety extension bar—supplied with the boom (sold separately)<br>Bolt—supplied with the boom (sold separately)<br>Locknut—supplied with the boom (sold separately) | 1<br>2<br>2 | Install the safety extension bar (trenchers without a crumber attachment only). |
| 3 | Crumber extension bar—supplied with the boom (sold separately)<br>Bolt—supplied with the boom (sold separately)<br>Locknut—supplied with the boom (sold separately) | 1<br>2<br>2 | Install the crumber extension bar. |
| 4 | No parts required | – | Check the fluid levels. |
| 5 | No parts required | – | Charge the battery. |

# 1

# Installing the Boom and Chain

**Parts needed for this procedure:**

| | |
|---|---|
| 1 | Boom (sold separately) |
| 1 | Chain (sold separately) |

## Procedure

***Important:*** **There are several boom and chain size configurations available. Refer to your Authorized Service Dealer to obtain the appropriate boom and chain to meet your requirements.**

1. Park the machine on a level surface and engage the parking brake.
2. Shut off the engine and remove the key.
3. Remove the bolt, 2 saddle washers, and nut securing the spoils auger and remove the auger (Figure 5).

   **Note:** Save the fasteners for future use.

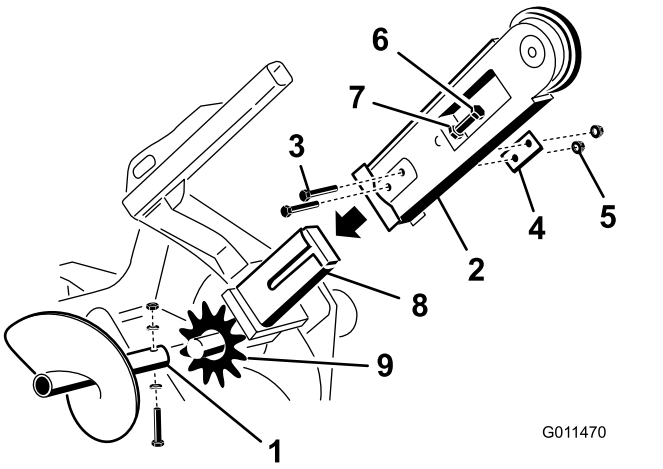


**Figure 5**

1. Spoils auger
2. Boom
3. Bolt (2)
4. Double washer
5. Nut (2)
6. Adjusting bolt
7. Jam nut
8. Arm on the drive head
9. Drive sprocket

4. Remove the 2 bolts, nuts, and double washers from the sides of the boom (Figure 5).
5. Loosen the adjusting bolt and jam nut (Figure 5).
6. Slide the boom over the arm on the drive head.

7. Install the 2 bolts, nuts, and double washers removed in step 4 through the boom and arm, but do not tighten them.
8. If the chain is not connected, connect the links by pressing or hammering the clevis pin supplied with the chain through the links.

   ***Important:*** **To avoid bending the chain links, place blocks under and between the links when hammering the clevis pin through.**
9. Secure the clevis pin with the cotter pin supplied with the chain.
10. Loop the digging chain over the auger drive shaft and onto the drive sprocket, ensuring that the digging teeth point forward on the upper span.
11. Set the upper span of the chain into place on the trencher boom, then wrap the chain around the roller at the end of the boom.
12. Thread the adjustment bolt into the boom and turn it in until there is 3.8 to 6.3 cm (1-1/2 to 2-1/2 inches) of slack in the chain on the bottom span.
13. Thread the jam nut down the adjusting bolt and tighten it securely against the boom.
14. Torque the 2 bolts and nuts securing the boom to 183 to 223 N·m (135 to 165 ft-lb).
15. Install the spoils auger using the bolt, 2 saddle washers, and nut that you removed previously.
16. Torque the bolt and nut to 101 N·m (75 ft-lb).

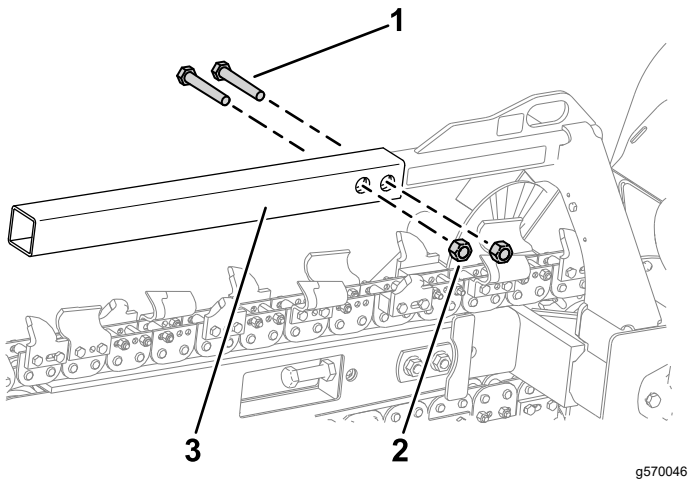


**Figure 6**

1. Bolt—1/2 x 3 inches (2)
2. Locknut—1/2 inch (2)
3. Safety extension bar

# 2

# Installing the Safety Bar

## Trenchers without a Crumber Attachment Only

**Parts needed for this procedure:**

| | |
|---|---|
| 1 | Safety extension bar—supplied with the boom (sold separately) |
| 2 | Bolt—supplied with the boom (sold separately) |
| 2 | Locknut—supplied with the boom (sold separately) |

## Procedure

Install the safety extension bar (supplied with the boom) over the end of the safety-rail assembly and secure it using the 2 bolts and locknuts.

# 3

# Installing the Crumber Extension Bar

## Trenchers with a Crumber Attachment Only

**Parts needed for this procedure:**

| | |
|---|---|
| 1 | Crumber extension bar—supplied with the boom (sold separately) |
| 2 | Bolt—supplied with the boom (sold separately) |
| 2 | Locknut—supplied with the boom (sold separately) |

## Procedure

Install the crumber extension bar (supplied with the boom) over the end of the safety-rail assembly and secure it using the 2 bolts and locknuts.

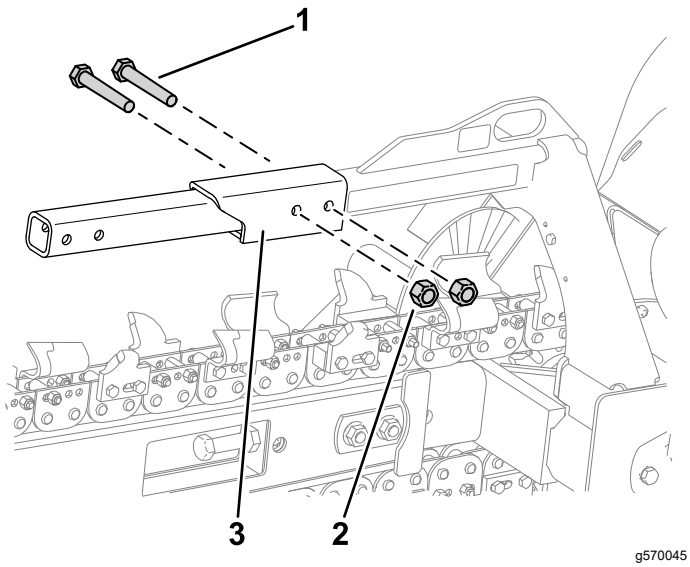


**Figure 7**

1. Bolt—1/2 x 3 inches (2)
2. Locknut—1/2 inch (2)
3. Crumber extension bar

# 4

# Checking the Fluid Levels

**No Parts Required**

## Procedure

Before starting the engine for the first time, check the engine-oil and hydraulic-fluid levels. Refer to the following sections for more information:

- Checking the Engine-Oil Level (page 30)
- Checking the Hydraulic-Fluid Level (page 46)

# 5

# Charging the Battery

**No Parts Required**

## Procedure

Charge the battery; refer to Charging the Battery (page 40) for more information.

# Product Overview

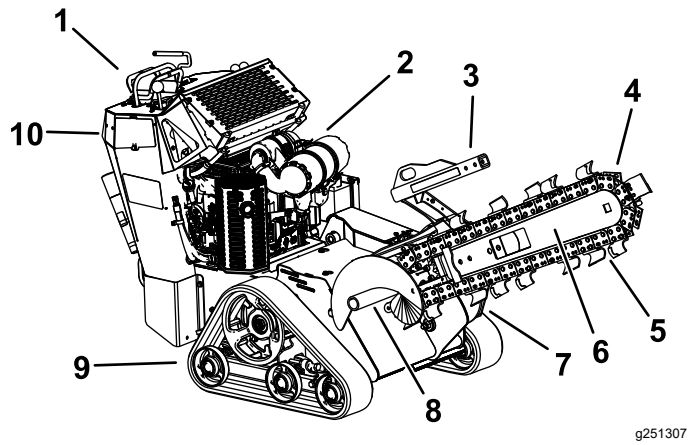


**Figure 8**

1. Control panel
2. Engine
3. Chain guard
4. Chain
5. Digging teeth
6. Boom
7. Trencher head
8. Spoils auger
9. Track
10. Reverse safety plate

# Controls

Become familiar with all the controls (Figure 9) before you start the engine and operate the machine.

## Control Panel

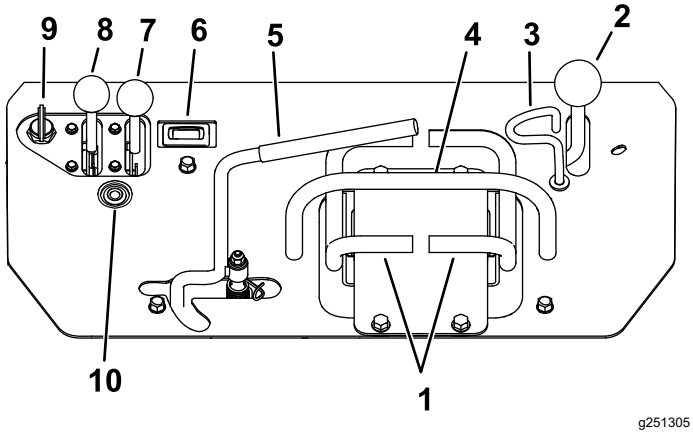


**Figure 9**

1. Traction control
2. Boom-elevation lever
3. Boom-elevation-lever lock
4. Reference bar
5. Trencher control lever
6. Hour meter
7. Choke lever—Toro engines only
8. Throttle lever
9. Key switch
10. Malfunction-indicator light (MIL)—Kohler engines only

## Electronic-Control Unit Malfunction-Indicator Light

**Kohler Machines Only**

The electronic-control unit (ECU) continuously monitors the operation of the EFI system.

If a problem or fault within the system is detected, the malfunction-indicator light (MIL) is illuminated (Figure 9).

The MIL is the red light located in the console panel.

When the MIL illuminates, make initial troubleshooting checks.

If these checks do not correct the problem, contact an authorized service dealer for your engine for further diagnosis and service.

## Key Switch

The key switch, used to start and shut off the engine, has 3 positions: OFF, RUN, and START. Refer to Starting the Engine (page 21).

## Throttle Lever

Move the control forward to increase the engine speed and rearward to decrease the engine speed.

## Choke Lever

**Toro Engines Only**

Before starting a cold engine, move the choke lever forward. After the engine starts, regulate the choke to keep the engine running smoothly. As soon as possible, move the choke lever all the way rearward.

**Note:** A warm engine requires little or no choking.

## Hour Meter

The hour meter displays the number of hours of operation that have been logged on the machine.

## Reference Bar

When driving the machine, use the reference bar as a handle and a leverage point for controlling the machine. To ensure smooth, controlled operation, do not take both hands off the reference bar while operating the machine.

# Traction Controls

- To move forward, move both traction controls forward (Figure 10).

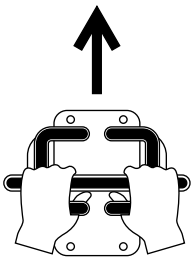

g258529

**Figure 10**

- To move rearward, move both traction controls rearward (Figure 11).

  ***Important:*** **When reversing, look behind you for obstructions and keep your hands on the reference bar.**

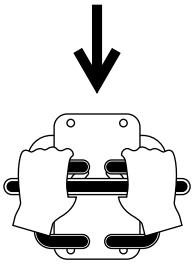

g258530

**Figure 11**

- To turn right, move the left traction control forward (Figure 12).

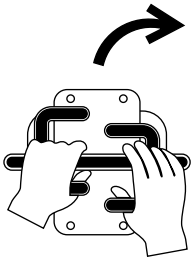

g258532

**Figure 12**

- To turn left, move the right traction control forward (Figure 13).

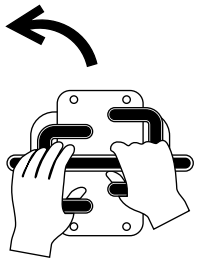

g258531

**Figure 13**

- To stop the machine, release the traction controls.

**Note:** The farther you move the traction control in any direction, the faster the machine moves in that direction.

# Boom-Elevation Lever

To lower the boom, slowly move the lever forward (Figure 14).

To raise the boom, slowly move the lever rearward (Figure 14).

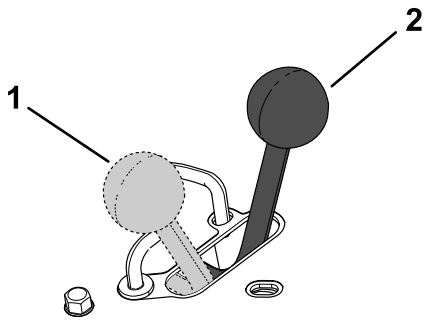


g258811

**Figure 14**

1. Raise the boom
2. Lower the boom

## Boom-Elevation Lock

The boom-elevation lock secures the boom-elevation lever so that you cannot push it forward. This helps to ensure that no one accidentally lowers the boom during maintenance. Secure the boom with the lock anytime you need to stop the machine with the boom raised.

To set the lock, lift up on it so it clears the hole in the control panel and swing it to the right in front of the boom elevation lever, pushing it down into the locked position (Figure 15).

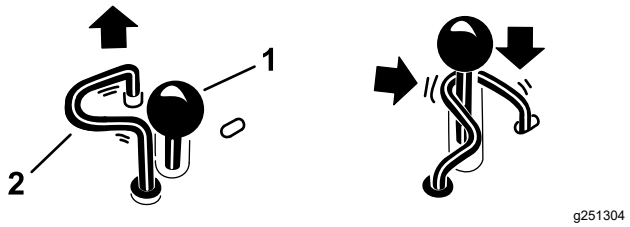


g251304

**Figure 15**

1. Boom-elevation lever
2. Boom-elevation lock

## Trencher Control Lever

To dig with the trencher, rotate the lever rearward and pull it down to the reference bar (Figure 16, number 1).

To reverse the trencher head, rotate the lever rearward, then move it left into the upper slot (Figure 16, number 2).

If you release the lever, it will automatically return to the neutral position (Figure 16, number 3), stopping the chain.

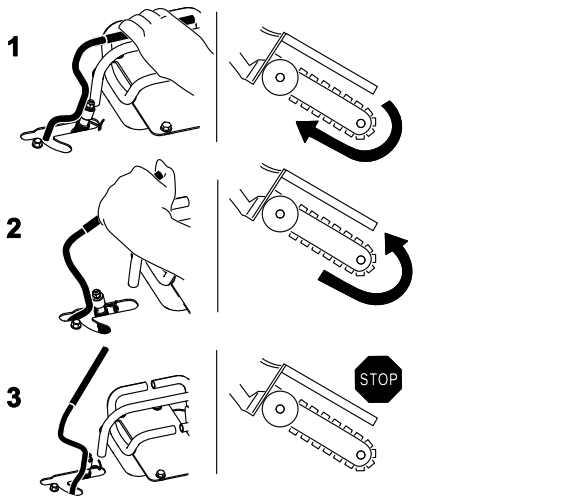


g261593

**Figure 16**

1. Forward
2. Reverse
3. Neutral

## Parking-Brake Lever

- To engage the parking brake, pull the brake lever rearward and up (Figure 17).
- To disengage the parking brake, pull the lever rearward and then down (Figure 17).

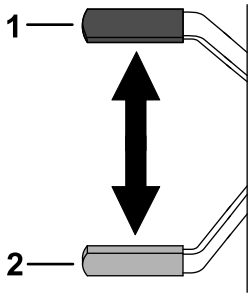


g251303

**Figure 17**

1. Parking brake engaged
2. Parking brake disengaged

# Specifications

**Note:** Specifications and design are subject to change without notice.

| | |
|---|---|
| Width | 86 cm (33.8 inches) |
| Length with 70 cm (24 inch) boom | 210 cm (83 inches) |
| Length with 91.4 cm (36 inch) boom | 235 cm (93 inches) |
| Length with 122 cm (48 inch) boom | 283 cm (111 inches) |
| Height | 117 cm (46 inches) |
| Weight for Model 22983, 22983G, and 22983HD | 501 kg (1,104 lb) |
| Weight for Model 22984 and 22984HD | 505 kg (1,114 lb) |

* A 91.4 cm (36 inch) boom and chain adds about 27 kg (60 lb) to the listed weight.

## Attachments/Accessories

A selection of Toro approved attachments and accessories is available for use with the machine to enhance and expand its capabilities. Contact your Authorized Service Dealer or authorized Toro distributor or go to www.Toro.com for a list of all approved attachments and accessories.

To ensure optimum performance and continued safety certification of the machine, use only genuine Toro replacement parts and accessories. Replacement parts and accessories made by other manufacturers could be dangerous, and such use could void the product warranty.

# Operation

**Note:** Determine the left and right sides of the machine from the normal operating position.

***Important:*** **Before operating the machine, check the fluid levels, and remove debris from the machine. Ensure that the area is clear of people and debris. You should also know and have marked the locations of all utility lines.**

# *Before Operation*

## Before Operation Safety

### General Safety

- Have the property or work area marked for buried lines and other objects, and do not dig in marked areas; note the location of unmarked objects and structures, such as underground storage tanks, wells, and septic systems.
- Inspect the area where you will use the equipment.
  - Evaluate the terrain to determine what accessories and attachments you need to properly and safely perform the job.
  - Remove all debris.
  - Ensure that the area is clear of bystanders before operating the machine.
  - Stop the machine if anyone enters the area.
- Become familiar with the safe operation of the equipment, operator controls, and safety decals.
  - The owner is responsible for training all operators and mechanics.
  - Never allow children or untrained people to operate or service the machine. Local regulations may restrict the age or require certified training of the operator.
  - Know how to stop the machine and shut off the engine quickly.
  - Check that the operator's presence controls, safety switches, and shields are attached and functioning properly. Do not operate the machine unless they are functioning properly.
  - Locate the pinch-point areas marked on the machine and attachments; keep your hands and feet away from these areas.
  - Stop the machine, shut off the engine, and remove the key before leaving the operating position.

### Fuel Safety

- Use extreme care in handling fuel. It is flammable and its vapors are explosive.
- Extinguish all cigarettes, cigars, pipes, and other sources of ignition.
- Use only an approved fuel container.
- Do not remove the fuel cap or fill the fuel tank while the engine is running or hot.
- Do not add or drain fuel in an enclosed space.
- Do not store the machine or fuel container where there is an open flame, spark, or pilot light, such as on a water heater or other appliance.
- If you spill fuel, do not attempt to start the engine; avoid creating any source of ignition until the fuel vapors have dissipated.
- Do not fill containers inside a vehicle or on a truck or trailer bed with a plastic liner. Always place containers on the ground, away from your vehicle before filling.
- Remove the equipment from the truck or trailer and refuel it while it is on the ground. If this is not possible, then refuel from a portable container rather than a fuel-dispenser nozzle.
- Keep the fuel-dispenser nozzle in contact with the rim of the fuel tank or container opening at all times until fueling is complete. Do not use a nozzle lock-open device.

## Adding Fuel

### Recommended Fuel

- For best results, use only clean, fresh (less than 30 days old), unleaded gasoline with an octane rating of 87 or higher ((R+M)/2 rating method).
- **Ethanol**: Gasoline with up to 10% ethanol (gasohol) or 15% MTBE (methyl tertiary butyl ether) by volume is acceptable. Ethanol and MTBE are not the same. Gasoline with 15% ethanol (E15) by volume is not approved for use. **Never use gasoline that contains more than 10% ethanol by volume**, such as E15 (contains 15% ethanol), E20 (contains 20% ethanol), or E85 (contains up to 85% ethanol). Using unapproved gasoline may cause performance problems and/or engine damage which may not be covered under warranty.
- **Do not** use gasoline containing methanol.
- **Do not** store fuel either in the fuel tank or fuel containers over the winter unless you use a fuel stabilizer.
- **Do not** add oil to gasoline.

## Using Stabilizer/Conditioner

Use fuel stabilizer/conditioner in the machine to keep the fuel fresh longer when used as directed by the fuel-stabilizer manufacturer.

***Important:*** **Do not use fuel additives containing methanol or ethanol.**

Add the amount of fuel stabilizer/conditioner to fresh fuel as directed by the fuel-stabilizer manufacturer.

## Filling the Fuel Tank

1. Park the machine on a level surface, engage the parking brake (if equipped), and lower the boom.
2. Shut off the engine, remove the key, and allow the engine to cool.
3. Clean around the fuel-tank cap and remove it (Figure 18).

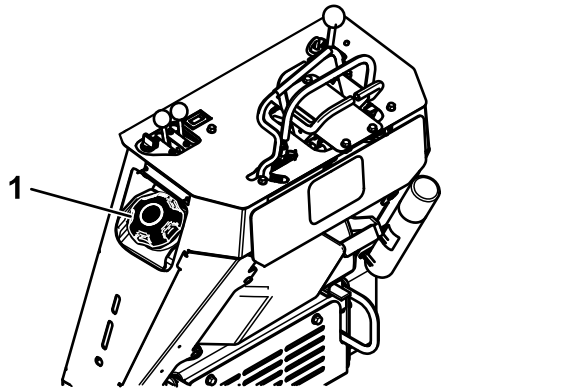


g251914

**Figure 18**

1. Fuel-tank cap

4. Add fuel to the tank until the level is 6 to 13 mm (1/4 to 1/2 inch) below the bottom of the filler neck.

   ***Important:*** **This space in the tank allows fuel to expand. Do not fill the fuel tank completely full.**
5. Install the fuel-tank cap securely, turning it until it clicks.
6. Wipe up any spilled fuel.

# Performing Daily Maintenance

Before starting the machine each day, perform the Each Use/Daily procedures listed in Maintenance (page 25).

# *During Operation*

# During Operation Safety

## General Safety

- Keep your hands and feet away from moving teeth, chain, auger, or other parts.
  - Keep bystanders and pets away from the machine and never carry passengers.
  - Wear appropriate clothing, including eye protection, long pants, substantial slip-resistant footwear, and hearing protection.
  - Tie back long hair and do not wear loose clothing or loose jewelry.
  - Stop digging if anyone enters the area.
- The machine moves in reverse during operation—be aware of your surroundings while using the machine.
  - Operate the machine only in areas where there is sufficient clearance for you to safely maneuver.
  - Be aware of obstacles in close proximity to you. Failure to maintain adequate distance from trees, walls, and other barriers may result in injury as the machine backs up during operation if you are not attentive to the surroundings.
  - Look behind and down before backing up to ensure that the path is clear.
- Use your full attention while operating the machine. Do not engage in any activity that causes distractions; otherwise, injury or property damage may occur.
- Never jerk the traction and boom-elevation controls; use a steady motion.
- The owner/user can prevent and is responsible for accidents that may cause personal injury or property damage.
- Do not operate the machine when you are tired, ill, or under the influence of alcohol or drugs.
- Operate the machine only in good light.
- Ensure that all the drives are in neutral and engage the parking brake before starting the engine. Start the engine only from the operator's position.
- Use care when approaching blind corners, shrubs, trees, or other objects that may obscure vision.
- Stop the digging chain when you are not digging.
- Stop the machine, shut off the engine, remove the key, and inspect the machine if you strike an object. Make any necessary repairs before resuming operation.
- Never run an engine in an enclosed area.

- Never leave a running machine unattended. Before leaving the operating position, do the following:
  - Park the machine on a level surface.
  - Lower the boom to the ground.
  - Engage the parking brake.
  - Shut off the engine and remove the key.
- Check for overhead clearance (i.e., electrical wires, branches, and doorways) before driving under any objects and do not contact them.
- Do not operate the machine when there is the risk of lightning.
- Use only Toro-approved attachments and accessories.

## Slope Safety

- Operate up and down slopes with the front of the machine uphill.
- Raising the boom on a slope affects the stability of the machine. Keep the boom in the lowered position when on slopes.
- Slopes are a major factor related to loss-of-control and tip-over accidents, which can result in severe injury or death. Operating the machine on any slope or uneven terrain requires extra caution.
- Establish your own procedures and rules for operating on slopes. These procedures must include surveying the site to determine which slopes are safe for machine operation. Always use common sense and good judgment when performing this survey.
- Slow down and use extra care on hillsides. Ground conditions can affect the stability of the machine.
- Avoid starting or stopping the machine on a slope.
- Avoid turning on slopes. If you must turn, turn slowly and keep the heavy end of the machine uphill.
- Keep all movements on slopes slow and gradual. Do not make sudden changes in speed or direction.
- If you feel uneasy operating the machine on a slope, do not do it.
- Watch for holes, ruts, or bumps, as uneven terrain could overturn the machine. Tall grass can hide obstacles.
- Use caution when operating on wet surfaces. Reduced traction could cause sliding.
- Evaluate the area to ensure that the ground is stable enough to support the machine.
- Use caution when operating the machine near the following:
  - Drop-offs
  - Ditches
  - Embankments
  - Bodies of water

  The machine could suddenly roll over if a track goes over the edge or the edge caves in. Maintain a safe distance between the machine and any hazard.
- If the machine starts to tip, let go of the controls and step away from the machine.
- Do not remove or add attachments on a slope.
- Do not park the machine on a hillside or slope.

# Starting the Engine

1. Move the throttle lever midway between the SLOW and FAST positions (Figure 19).

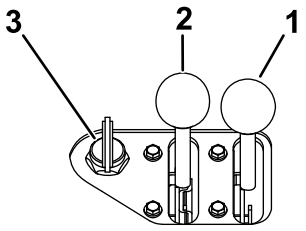


g251917

**Figure 19**

1. Choke lever (Toro engines only)
2. Throttle lever
3. Key

2. For Toro engines, do the following:
   A. Move the choke lever to the ON position (Figure 19).

      **Note:** A warm or hot engine may not require choking.

   B. Turn the key to the ON position (Figure 19). When the engine starts, release the key.

   C. Gradually move the choke lever to the OFF position (Figure 19). If the engine stalls or hesitates, engage the choke again until the engine warms up.
3. For Kohler engines, turn the key to the ON position (Figure 19). When the engine starts, release the key.
4. Move the throttle lever to the desired setting (Figure 19).

   ***Important:*** **Running the engine at high speeds when the hydraulic system is cold (i.e., when the air temperature is at or below freezing) could damage the hydraulic system. When starting the engine in cold conditions, allow it to run in the middle throttle position for 2 to 5 minutes before moving the throttle to the FAST position.**

   **Note:** If the outdoor temperature is below freezing, store the machine in a garage to keep it warmer and aid in starting.

# Driving the Machine

Use the traction controls to move the machine. The farther you move the traction controls in any direction, the faster the machine moves in that direction. Release the traction controls to stop the machine.

**⚠ CAUTION**

**When reversing, you may back into stationary objects or over bystanders and cause serious personal injury or death.**

**Look behind you for obstructions or bystanders and keep your hands on the reference bar.**

The throttle control regulates the engine speed as measured in rpm (revolutions per minute). Place the throttle lever in the FAST position for best performance. You can, however, use the throttle position to operate at slower speeds.

# Shutting off the Engine

1. Park the machine on a level surface, engage the parking brake (if applicable), and lower the boom.
2. Move the throttle lever to the SLOW position (Figure 19).
3. If the engine has been working hard or is hot, let it idle for a minute before turning the key switch to the OFF position.

   **Note:** This helps to cool the engine before you shut it off. In an emergency, you can shut off the engine immediately.
4. Turn the key switch to the OFF position and remove the key.

**⚠ CAUTION**

**A child or untrained bystander could attempt to operate the machine and be injured.**

**Remove the key from the switch when leaving the machine, even if just for a few seconds.**

# Digging a Trench

1. Start the engine, raise the boom, move the throttle lever to the FAST position, and move the machine over the area to be trenched.

   ***Important:*** **Allow the machine to warm up for several minutes before digging.**

2. Pull the trencher control lever to the reference bar to engage the trencher.
3. Without moving the traction controls, slowly lower the boom and chain into the ground to the desired depth.
4. Once the trencher boom is in the ground at a 45° to 60° angle, slowly move the machine rearward to extend the trench.

   **Note:** While trenching, the drive speed automatically decreases.

5. When finished, raise the boom out of the trench, then stop the trencher.

# Operating Tips

- Clean the area of trash, branches, and rocks before trenching to prevent damaging the machine.
- Always begin trenching with the slowest ground speed possible. Increase speed if conditions permit. If the chain speed slows down, reduce the ground speed to keep the chain moving at its fastest rate. Do not spin the tracks while trenching.
- Always use full throttle (maximum engine speed) when trenching.
- Always trench backward (i.e., in reverse).
- Trench with the chain at a 45° to 60° angle for best results.
- You will be able to dig a trench faster by controlling the depth with periodic adjustments of the boom.
- If the trencher binds in the soil, reverse the chain direction. Once the chain is loose, change chain directions and continue trenching.
- If you need the finished trench to be cleaner than what is possible with the trencher, you can purchase a crumber from your dealer. The crumber mounts onto the trencher head and scrapes the trench clean as you dig.
- To improve the quality of trenches less than 61 cm (24 inches) deep, use a 61 cm (24 inch) boom.
- Use the correct chain for the ground conditions, as listed in the following table:

| Soil Type | Recommended Chain Type |
|---|---|
| Sandy | Soil chain (configure with extra teeth for a faster digging speed; refer to your Authorized Service Dealer) |
| Sandy Loam/Loam/Loamy Clay | Soil chain |
| Wet, sticky clay | Soil chain |
| Hard soils: dry clay and compacted soils | Combination chain |
| Rocky soil/gravel | Rock chain |

# *After Operation*

## After Operation Safety

- Park the machine on a level surface, disengage the trencher hydraulics, lower the boom, engage the parking brake, shut off the engine, and remove the key. Wait for all movement to stop and allow the machine to cool before adjusting, servicing, cleaning, or storing it.
- Clean debris from the attachments, drives, mufflers, and engine to help prevent fires. Clean up oil or fuel spills.
- Keep all parts in good working condition and all hardware tightened.
- Use care when loading or unloading the machine into a trailer or truck.

## Securing the Machine for Transport

***Important:*** **Do not operate or drive the machine on roadways. Use care when loading or unloading the machine into a trailer or truck.**

1. Park the machine on a level surface, engage the parking brake (if applicable), and lower the boom.
2. Shut off the engine and remove the key.
3. Secure the machine to a trailer with chains or straps using the tie-down/lift loops at the front and rear of the machine (Figure 20 and Figure 21). Refer to your local ordinances for trailer and tie-down requirements.

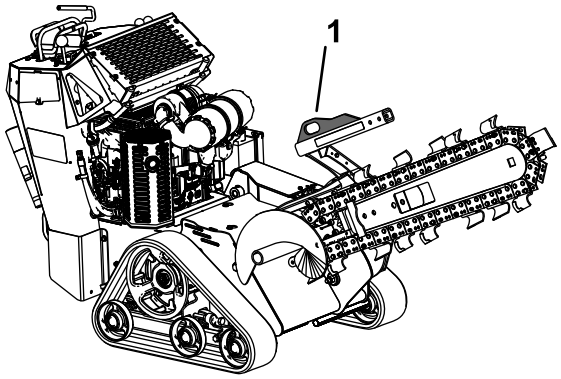


g251915

**Figure 20**

1. Front tie-down loop

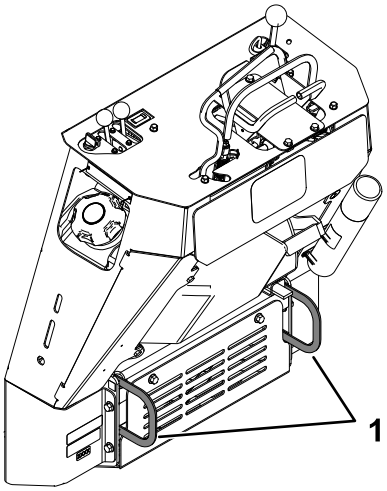


g251916

**Figure 21**

1. Rear tie-down loops

# Lifting the Machine

**Service Interval:** Before each use or daily—Inspect lift and tie-down points for structural integrity.

***Important:*** **Use a spreader bar when lifting to avoid damage to the machine.**

You can lift the machine using the tie-down/lift loops as lift points (Figure 20 and Figure 21).

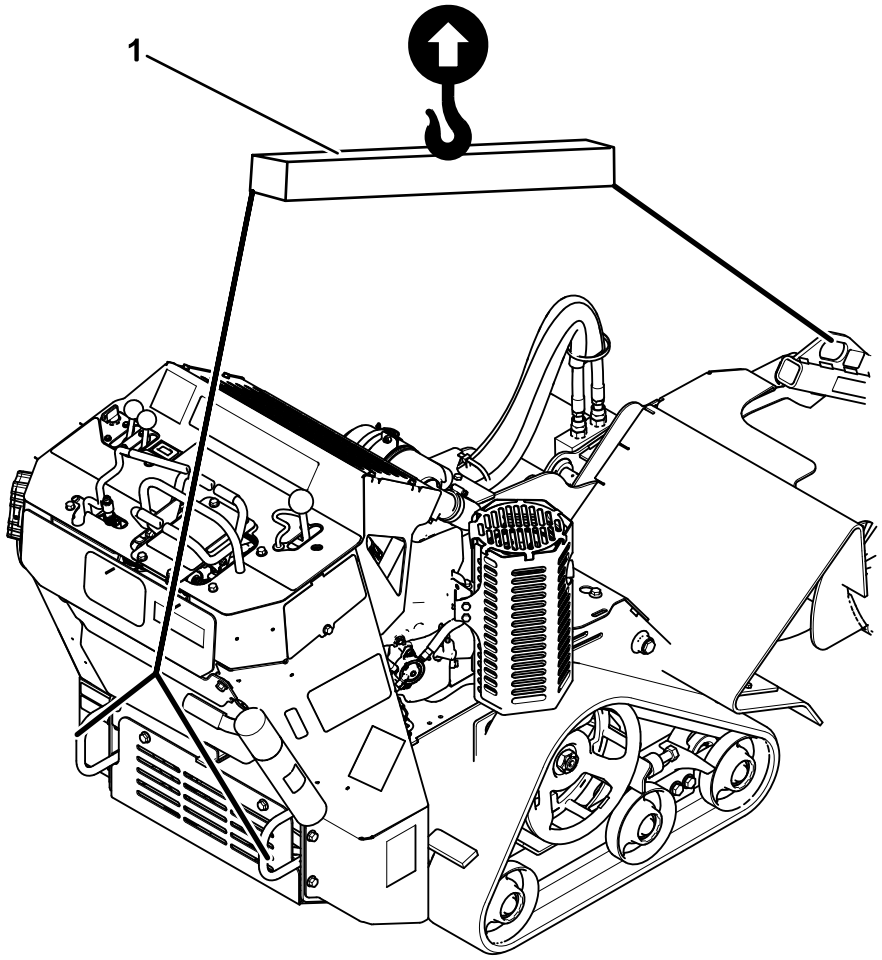


g502734

**Figure 22**

1. Spreader bar

# Maintenance

**Note:** Determine the left and right sides of the machine from the normal operating position.

**⚠ CAUTION**

**If you leave the key in the key switch, someone could accidently start the engine and seriously injure you or other bystanders.**

**Remove the key from the key switch and disconnect the wires from the spark plugs before you do any maintenance. Set the wires aside so that they do not accidentally contact the spark plugs.**

## Maintenance Safety

- Park the machine on a level surface, disengage the trencher hydraulics, lower the boom, engage the parking brake, shut off the engine, and remove the key. Wait for all movement to stop and allow the machine to cool before adjusting, cleaning, storing, or repairing it.
- Clean up oil or fuel spills.
- Do not allow untrained personnel to service the machine.
- Use jack stands to support the components when required.
- Carefully release pressure from components with stored energy.
- Disconnect the battery before making any repairs.
- Keep your hands and feet away from the moving parts. If possible, do not make adjustments with the engine running.
- Keep all parts in good working condition and all hardware tightened. Replace all worn or damaged decals.
- Do not tamper with the safety devices.
- Use only genuine Toro replacement parts.

## Recommended Maintenance Schedule(s)

| Maintenance Service Interval | Maintenance Procedure |
|---|---|
| After the first 5 hours | • For Toro engines—change the engine oil and filter. |
| After the first 50 hours | • Check and adjust the track tension. |
| Before each use or daily | • Inspect lift and tie-down points for structural integrity.<br>• Grease the machine. (Grease immediately after every washing.)<br>• Check the air cleaner.<br>• For Kohler engines—check the engine-oil level.<br>• For Toro engines—check the engine-oil level.<br>• Check the condition of and clean the tracks.<br>• Test the parking brake.<br>• Check the condition of the digging teeth and replace any that are worn or damaged.<br>• Check for loose fasteners. |
| After each use | • Remove debris from the machine. |
| Every 25 hours | • Check the battery-electrolyte level (replacement batteries only).<br>• Check the hydraulic-fluid level.<br>• Check the digging chain for excessive wear and proper tension. |
| Every 40 hours | • Grease the trencher housing. |
| Every 100 hours | • For Kohler engines—change the engine oil (more often in dusty or sandy conditions).<br>• For Toro engines—change the engine oil and oil filter (more often in dirty or dusty conditions).<br>• For Toro engines—check the spark plug(s).<br>• Check and adjust the track tension.<br>• Check the hydraulic lines for leaks, loose fittings, kinked lines, loose mounting supports, wear, weather, and chemical deterioration and repair if necessary. |

| Maintenance Service Interval | Maintenance Procedure |
|---|---|
| Every 150 hours | • For Kohler engines—Inspect the outer air filter. |
| Every 200 hours | • For Kohler engines—change the engine-oil filter (more often in dirty or dusty conditions).<br>• For Toro engines—check the valve clearance.<br>• For Toro engines—replace the spark plug(s).<br>• Replace the fuel filter.<br>• Replace the hydraulic filter. |
| Every 250 hours | • Check and grease the road wheels. |
| Every 300 hours | • For Kohler engines—replace the outer air filter (more often in dusty or sandy conditions).<br>• For Kohler engines—check the inner air filter.<br>• For Toro engines—replace the air filter (more often in dirty or dusty conditions). |
| Every 400 hours | • Change the hydraulic fluid. |
| Every 500 hours | • For Kohler engines—replace or clean and gap the spark plug(s). |
| Every 600 hours | • For Kohler engines—replace the inner air filter. |
| Every 1,500 hours | • Replace all moving hydraulic hoses. |
| Yearly or before storage | • Check and adjust the track tension.<br>• Check and adjust the chain tension.<br>• Touch up chipped paint |

***Important:*** **For Kohler engines, refer to your engine owner's manual for additional maintenance procedures.**

# Pre-Maintenance Procedures

## Removing the Cover Plate

1. Park the machine on a level surface, engage the parking brake (if applicable), and lower the boom.
2. Shut off the engine and remove the key.

**⚠ WARNING**

**There is a rotating shaft under the cover that is moving when the machine is running and can catch fingers, hands, loose hair, and clothing, causing serious injury, amputation, or death.**

**Always shut off the engine and wait for all moving parts to stop before removing the cover.**

3. Loosen the 3 bolts securing the cover plate to the frame sequentially until the cover is loose (Figure 23).

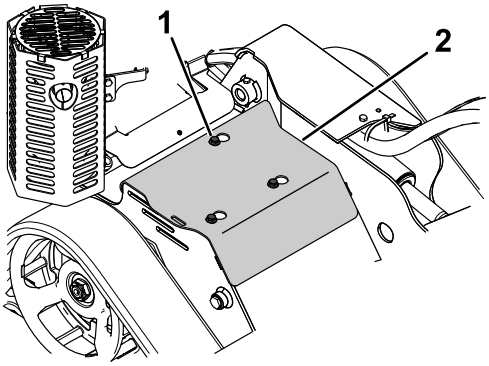


g258957

**Figure 23**

1. Bolt (3)
2. Cover plate

4. Slide the cover plate toward the right side of the machine, then pull it off over the bolts and off the machine.
5. To install the cover plate before operating the machine, slide the plate into place and tighten the 3 bolts you loosened previously (Figure 23).

## Removing the Bottom Shield

**Note:** The fasteners on the covers of this machine are designed to remain on the cover after removal.

Loosen all fasteners on each cover a few turns so that the cover is loose but still attached, then go back and loosen them until the cover comes free. This prevents you from accidentally stripping the bolts free of the retainers.

1. Park the machine on a level surface, engage the parking brake (if applicable), and lower the boom.
2. Shut off the engine and remove the key.
3. Loosen the 2 bolts securing the bottom shield sequentially until the shield is free (Figure 24).

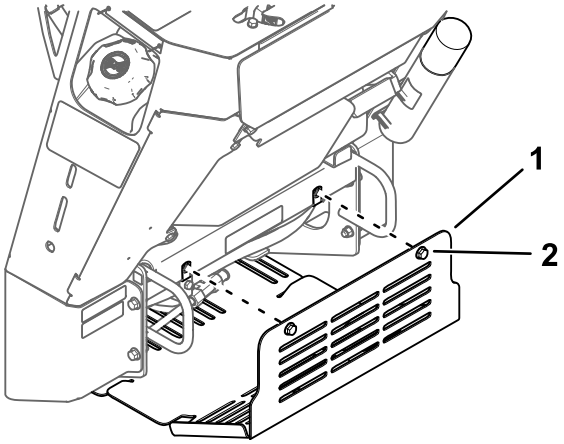


g325558

**Figure 24**

1. Bottom shield
2. Bolts

4. Pull the shield back and out of the machine.
5. To install the shield before operating the machine, slide the bottom shield into the machine so that it rests on all 4 tabs and secure it with the 2 bolts you loosened previously.

**Note:** You may need to lift up on the bottom shield to ensure that it rests on the front tabs.

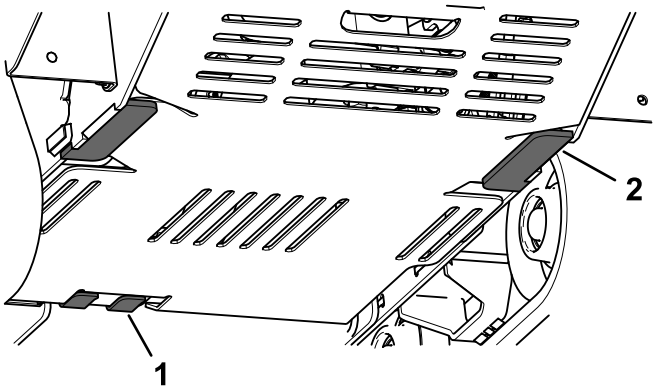


g325557

**Figure 25**

1. Front tab (2)
2. Rear tab (2)

# Greasing the Machine

**Service Interval:** Before each use or daily (Grease immediately after every washing.)

Grease Type: General-purpose grease.

1. Park the machine on a level surface, engage the parking brake, and lower the boom.
2. Shut off the engine and remove the key.
3. Clean the grease fittings with a rag.
4. Connect a grease gun to each fitting (Figure 26 through Figure 28).
5. Pump grease into the fittings until grease begins to ooze out of the bearings (approximately 3 pumps).
6. Wipe up any excess grease.

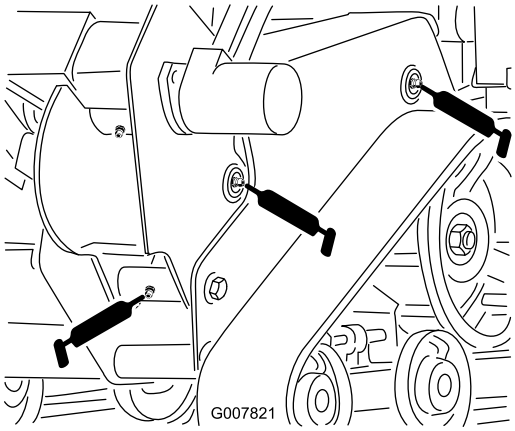


g007821

**Figure 26**

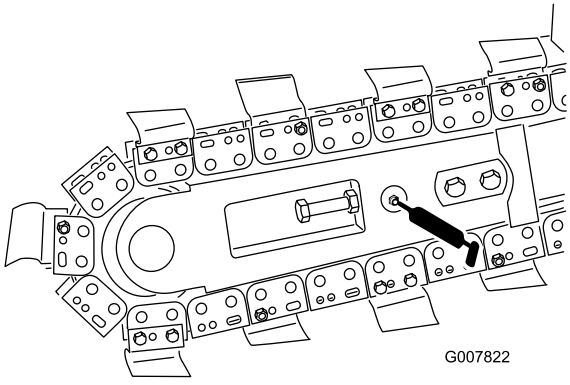


g007822

**Figure 27**

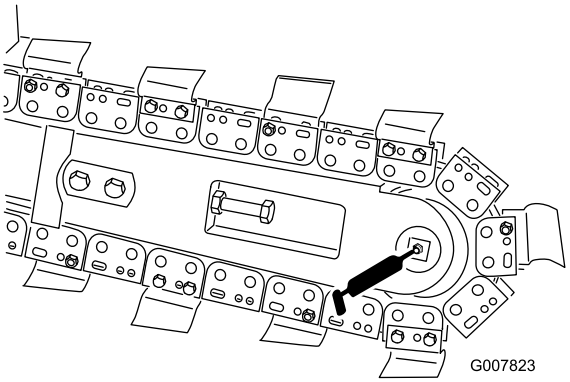


g007823

**Figure 28**

# Greasing the Trencher Housing

**Service Interval:** Every 40 hours

Grease Type: General-purpose grease.

1. Park the machine on a level surface, engage the parking brake, and lower the boom.
2. Shut off the engine and remove the key.
3. Clean the trencher housing grease fitting with a rag and connect a grease gun to it (Figure 29).

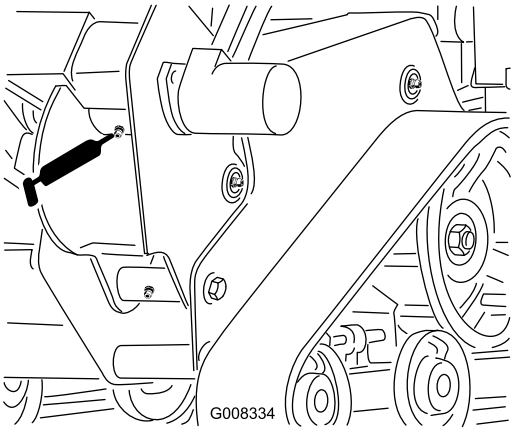


g008334

**Figure 29**

4. Pump grease into the fitting until grease comes out of the grease valve located next to the fitting.
5. Wipe up any excess grease.

# *Engine Maintenance*

## Engine Safety

- Shut off the engine before checking the oil or adding oil to the crankcase.
- Do not change the engine governor setting or overspeed the engine.
- Keep your hands, feet, face, clothing, and other body parts away from the muffler and other hot surfaces.

## Identifying the Engine

Use the following graphic to identify the engine you have and proceed to the section listed below for service (Figure 30).

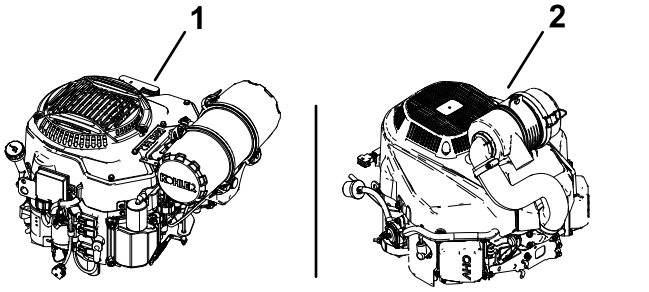


**Figure 30**

1. Kohler engine
2. Toro engine

- For Kohler engine maintenance, refer to Servicing a Kohler® Engine (page 29).
- For Toro engine maintenance, refer to Servicing a Toro Engine (page 34).

# Servicing a Kohler® Engine

## Servicing the Air Cleaner

**Service Interval:** Every 150 hours—For Kohler engines—Inspect the outer air filter.

Every 300 hours/Yearly (whichever comes first)—For Kohler engines—replace the outer air filter (more often in dusty or sandy conditions).

Every 300 hours—For Kohler engines—check the inner air filter.

Every 600 hours—For Kohler engines—replace the inner air filter.

**Note:** Check the filters more frequently if the operating conditions are extremely dusty or sandy.

### Removing the Filters

1. Park the machine on a level surface, engage the parking brake, and lower the boom.
2. Shut off the engine and remove the key.
3. Release the latches on the air cleaner and pull the air-inlet cover off the air-cleaner body (Figure 31).
4. Clean the air-inlet screen and cover.
5. Install the air-inlet cover and secure it with the latches (Figure 31).

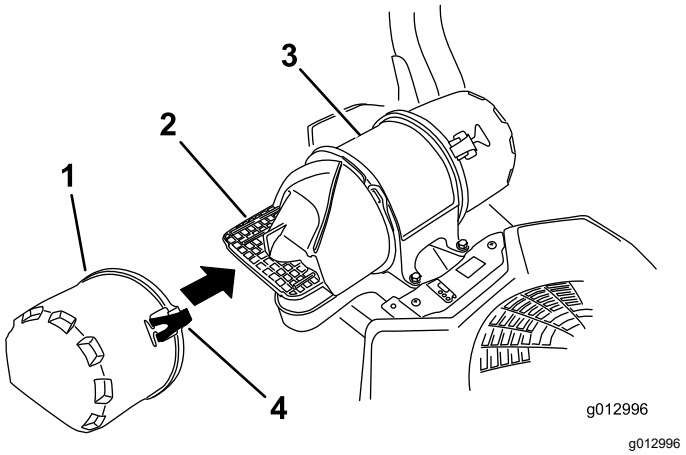


**Figure 31**

1. Air-inlet cover
2. Air-inlet screen
3. Air-cleaner body
4. Latch

6. Release the latches on the air cleaner and pull the air-cleaner cover off the air-cleaner body (Figure 32).
7. Clean the inside of the air-cleaner cover with compressed air.
8. Gently slide the outer filter out of the air-cleaner body (Figure 32).

**Note:** Avoid knocking the filter into the side of the body.

9. Remove the inner filter only if you intend to replace it.

   ***Important:*** **Never attempt to clean the inner filter. If the safety filter is dirty, then the outer filter is damaged. Replace both filters.**

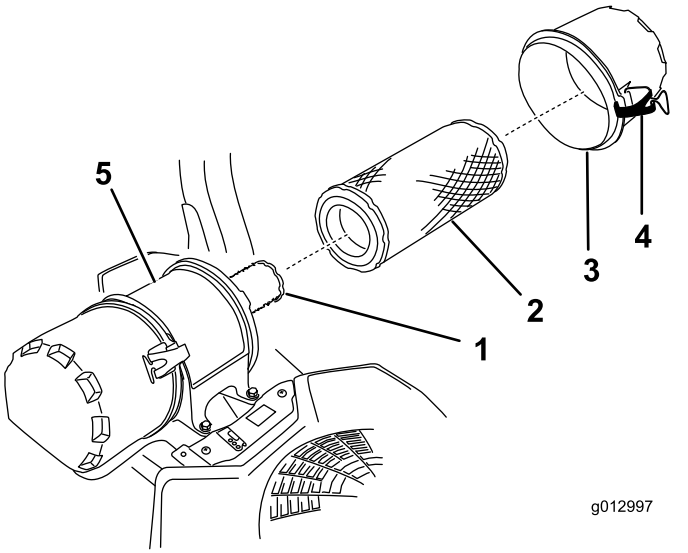


Figure 32

1. Inner filter
2. Outer filter
3. Air-cleaner cover
4. Latch
5. Air-cleaner body

### Inspecting the Filters

1. Inspect the inner filter. If it is dirty, replace both the inner and outer filters.

   ***Important:*** **Do not attempt to clean the inner filter. If the inner filter is dirty, then the outer filter is damaged.**

2. Inspect the outer filter for damage by looking into the filter while shining a bright light on the outside of the filter. If the outer filter is dirty, bent, or damaged, replace it.

   **Note:** Holes in the filter appear as bright spots. Do not clean the outer filter.

### Installing the Filters

***Important:*** **To prevent engine damage, always operate the engine with both air filters and the cover installed.**

1. If you are installing new filters, check each filter for shipping damage.

   **Note:** Do not use a damaged filter.

2. If you are replacing the inner filter, carefully slide it into the filter body (Figure 32).

3. Carefully slide the outer filter over the safety filter (Figure 32).

   **Note:** Ensure that the outer filter is fully seated by pushing on the outer rim while installing it.

   ***Important:*** **Do not press on the soft, inside area of the filter.**

4. Install the air-cleaner cover and secure the latches (Figure 31).

## Servicing the Engine Oil

**Service Interval:** Before each use or daily

Every 100 hours (more often in dusty or sandy conditions).

Every 200 hours (more often in dirty or dusty conditions).

### Engine Oil Specifications

**Oil Capacity:** with a filter change—1.9 L (64 fl oz); without a filter change—1.6 L (54 fl oz)

**Viscosity:** See the table below.

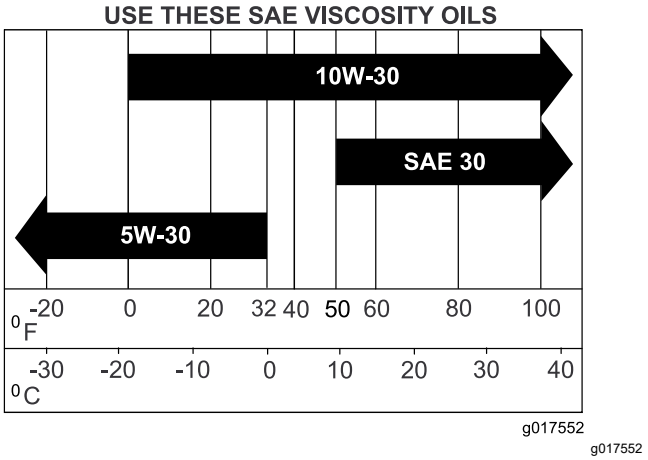


Figure 33

### Checking the Engine-Oil Level

1. Park the machine on a level surface, engage the parking brake (if applicable), and lower the boom.
2. Shut off the engine and remove the key.

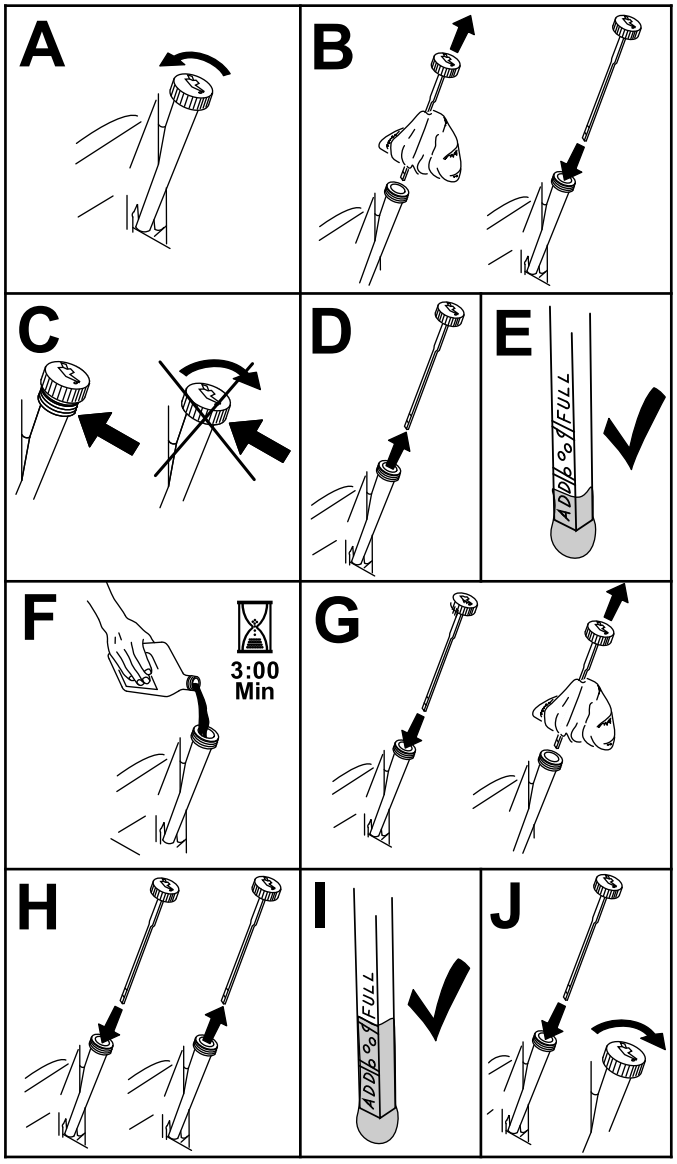


g194611

**Figure 34**

## Changing the Engine Oil

1. Start the engine and let it run 5 minutes. This warms the oil so it drains better.
2. Park the machine so that the drain side is slightly lower than the opposite side to ensure that the oil drains completely.
3. Lower the boom and engage the parking brake.
4. Shut off the engine, remove the key, and wait for all moving parts to stop before leaving the operating position.
5. Change the oil (Figure 35).

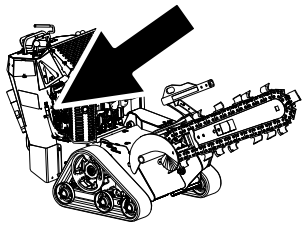

g261614

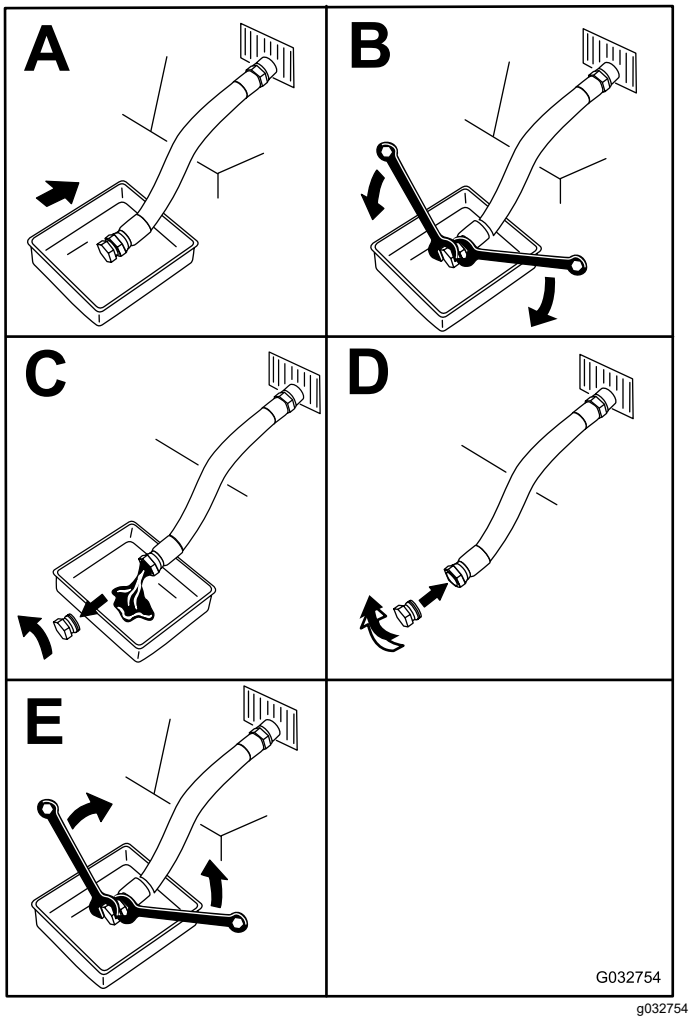


g032754

**Figure 35**

6. Slowly pour approximately 80% of the specified oil into the filler tube and slowly add the additional oil to bring it to the **Full** mark (Figure 36).

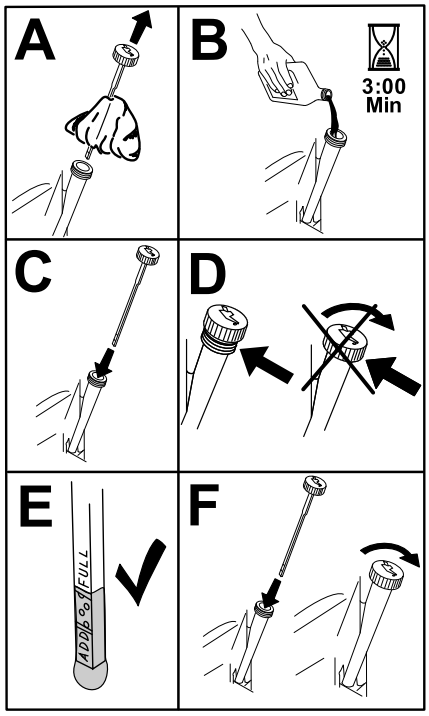


g194610

**Figure 36**

7. Start the engine and drive to a flat area.
8. Check the oil level again.

## Changing the Engine-Oil Filter

1. Drain the oil from the engine; refer to Changing the Engine Oil (page 31).
2. Change the engine-oil filter (Figure 37).

   **Note:** You can use a ratchet extension in the hole shown in Figure 38 to engage an oil-filter wrench.

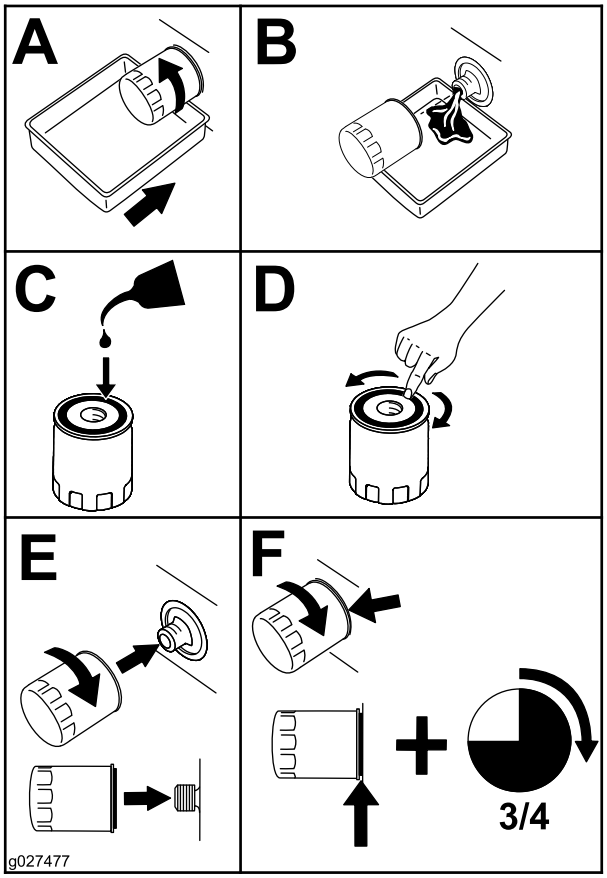


g027477

g027477

**Figure 37**

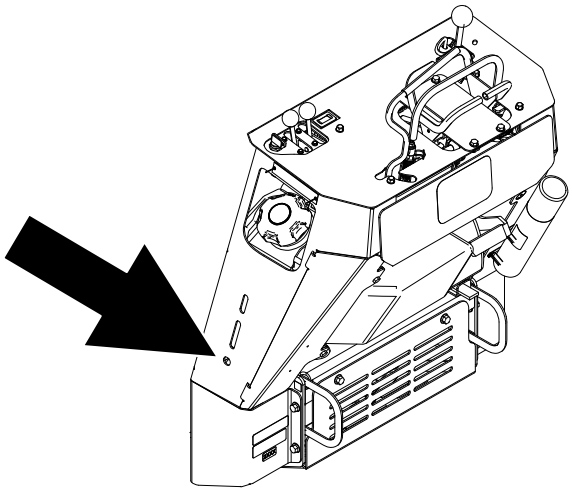

g261616

**Figure 38**

   **Note:** Ensure that the oil-filter gasket touches the engine, and then turn the oil filter an extra 3/4 turn.

3. Fill the crankcase with the proper type of new oil; refer to Engine Oil Specifications (page 30).

# Servicing the Spark Plug(s)

**Service Interval:** Every 500 hours

Make sure that the air gap between the center and side electrodes is correct before installing the spark plug(s). Use a spark plug wrench for removing and installing the spark plug(s) and a gapping tool/feeler gauge to check and adjust the air gap. Install a new spark plug(s) if necessary.

**Type of Spark Plug:** Champion® XC12YC or equivalent

**Air Gap:** 0.76 mm (0.03 inch)

## Removing the Spark Plug(s)

1. Park the machine on a level surface, engage the parking brake (if applicable), and lower the boom.
2. Shut off the engine and remove the key.
3. Locate and remove the spark plug(s) as shown in Figure 39.

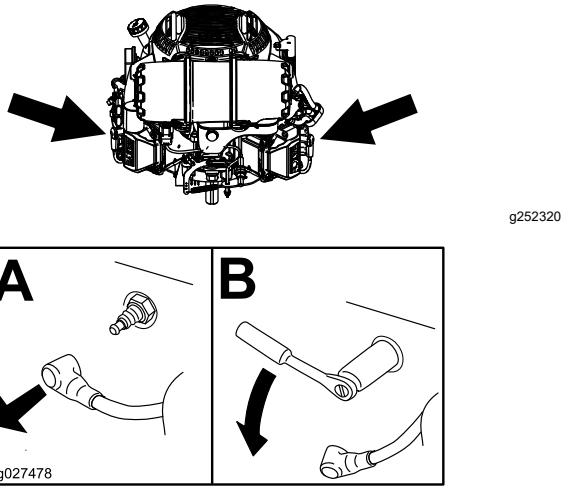


**Figure 39**

## Checking the Spark Plug(s)

***Important:*** **Do not clean the spark plug(s). Always replace the spark plug(s) when it has: a black coating, worn electrodes, an oily film, or cracks.**

If you see light brown or gray on the insulator, the engine is operating properly. A black coating on the insulator usually means the air cleaner is dirty.

Set the gap to 0.75 mm (0.03 inch).

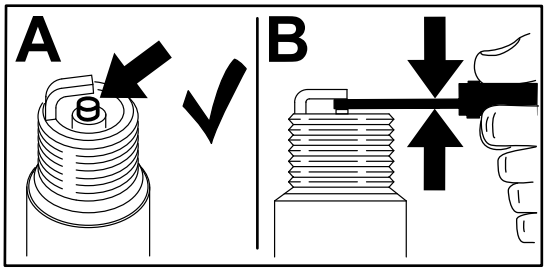


**Figure 40**

## Installing the Spark Plug(s)

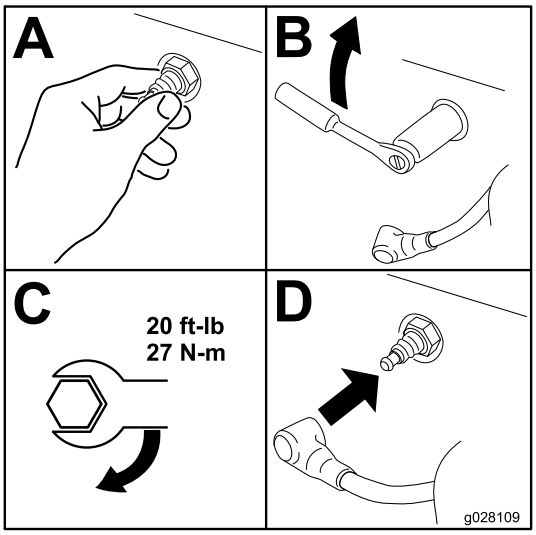


**Figure 41**

# Servicing a Toro Engine

## Servicing the Air Cleaner

**Service Interval:** Every 300 hours—For Toro engines—replace the air filter (more often in dirty or dusty conditions).

### Removing the Filter

1. Park the machine on a level surface, engage the parking brake (if applicable), and lower the boom.
2. Shut off the engine and remove the key.
3. Release the latches on the air cleaner and pull the air-cleaner cover off the air-cleaner body (Figure 42).

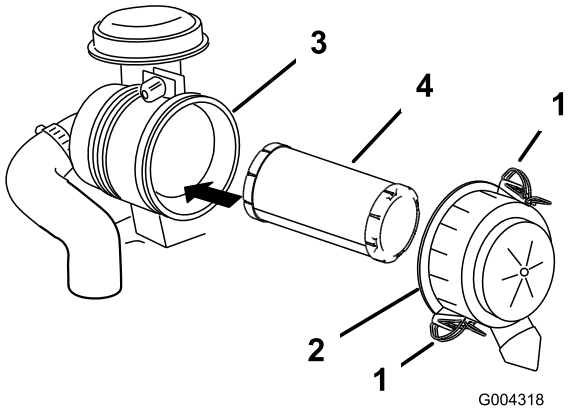


**Figure 42**

1. Latch
2. Air-cleaner cover
3. Air-cleaner body
4. Filter

4. Clean the inside of the air-cleaner cover with compressed air.
5. Gently slide the filter out of the air-cleaner body (Figure 42).

   **Note:** Avoid knocking the filter into the side of the body.

### Inspecting the Filter

Inspect the filter for damage by looking into the filter while shining a bright light on the outside of the filter. If the filter is dirty, bent, or damaged, replace it.

**Note:** Holes in the filter appear as bright spots. Do not clean the filter.

### Installing the Filter

***Important:*** **To prevent engine damage, always operate the engine with the air filter and the cover installed.**

1. If you are installing a new filter, check the filter for shipping damage.

   **Note:** Do not use a damaged filter.
2. Carefully slide the filter into the air-cleaner body (Figure 43).

   **Note:** Ensure that the filter is fully seated by pushing on the outer rim while installing it.

   ***Important:*** **Do not press on the soft, inside area of the filter.**
3. Install the air-cleaner cover and secure the latches (Figure 43).

## Servicing the Engine Oil

Before each use or daily

After the first 5 hours/After the first month (whichever comes first)—For Toro engines—change the engine oil and filter.

Every 100 hours/Yearly (whichever comes first)—For Toro engines—change the engine oil and oil filter (more often in dirty or dusty conditions).

### Engine-Oil Specifications

**Oil Type:** Detergent oil (API service SF, SG, SH, SJ, or SL)

**Crankcase Capacity:** 2.4 L (81 fl oz) with oil filter

**Viscosity:** See the table below.

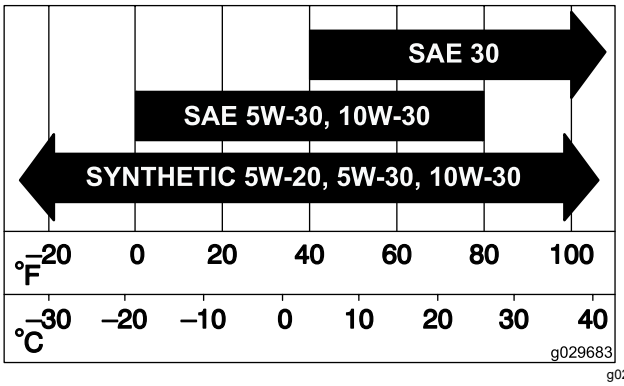


**Figure 43**

## Checking the Engine-Oil Level

1. Park the machine on a level surface, engage the parking brake (if applicable), and lower the boom.
2. Shut off the engine and remove the key.

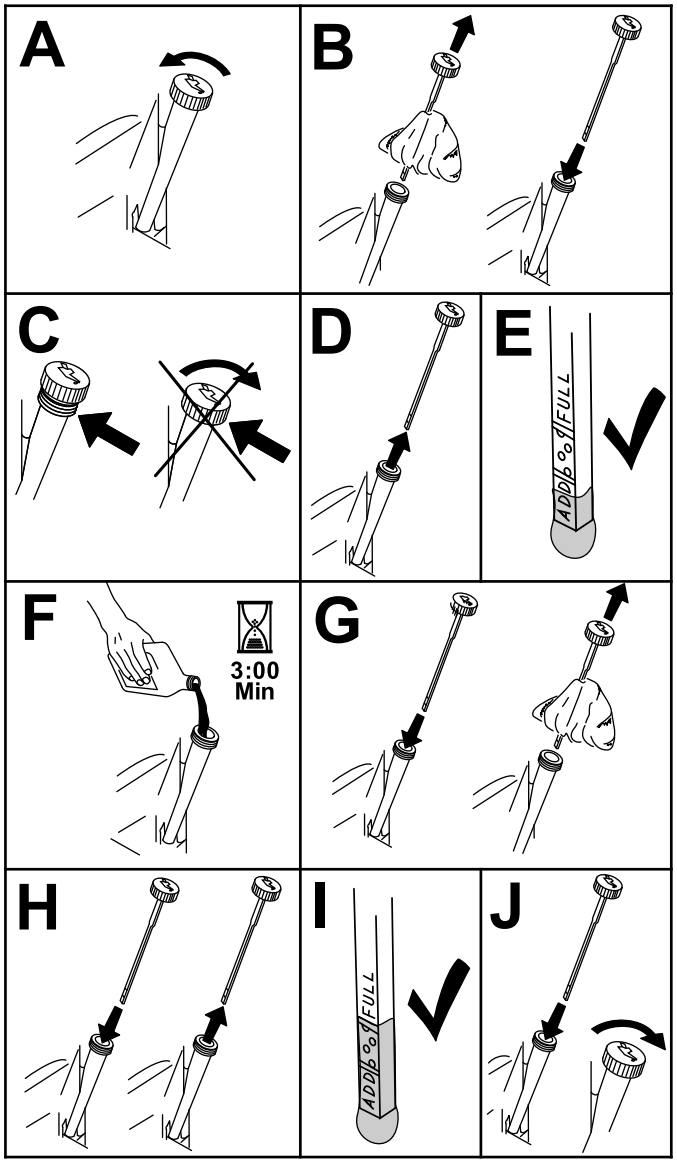


g194611

**Figure 44**

## Changing the Engine Oil and Oil Filter

1. Park the machine on a level surface, engage the parking brake (if applicable), and lower the boom.
2. Shut off the engine and remove the key.
3. Drain the oil from the engine (Figure 45).

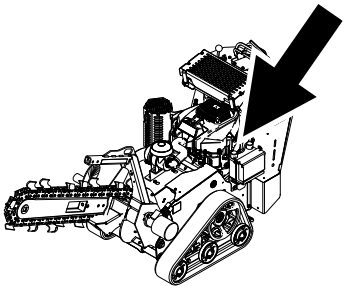

g272603

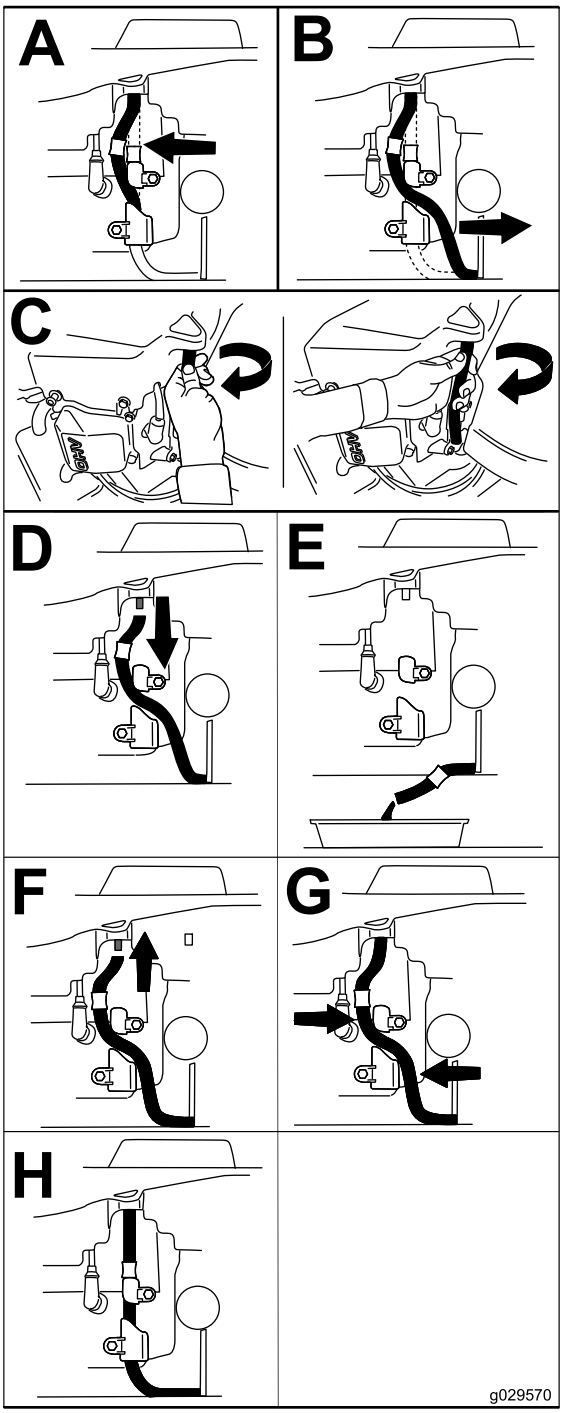


g029570

**Figure 45**

4. Change the engine-oil filter (Figure 46).

**Note:** Ensure that the oil-filter gasket touches the engine and then turn the filter an extra 3/4 turn.

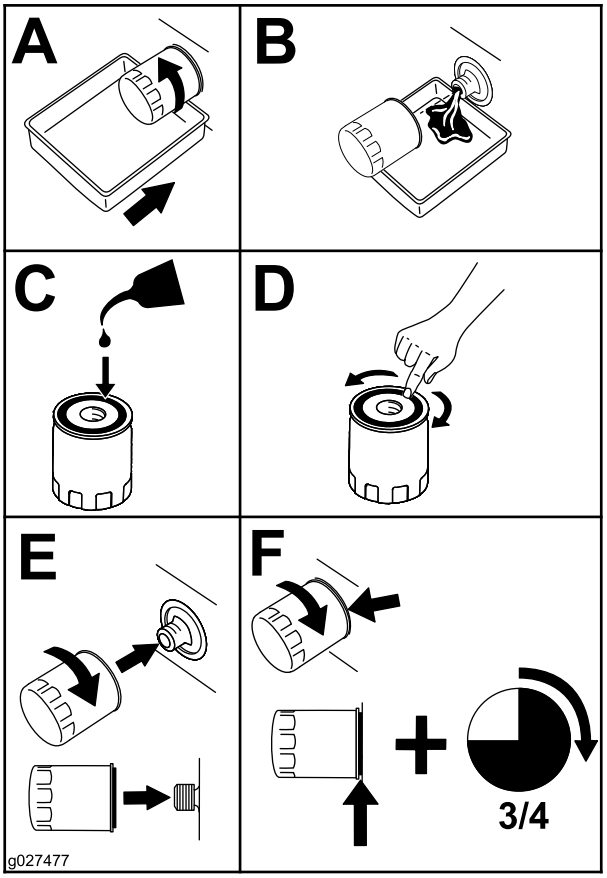


g027477

**Figure 46**

5. Slowly pour approximately 80% of the specified oil into the filler tube and slowly add the additional oil to bring it to the Full mark (Figure 47).

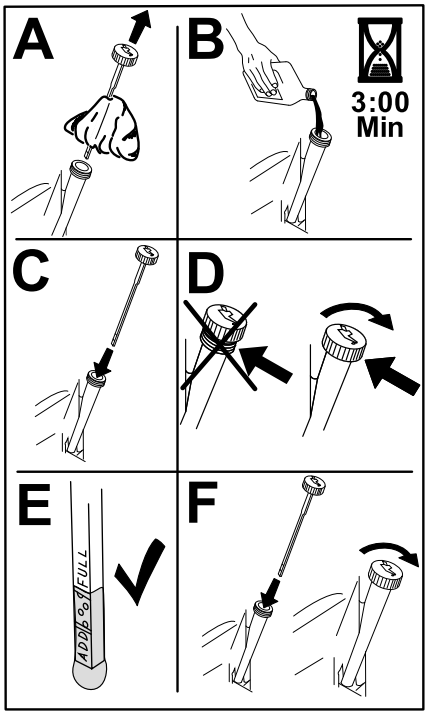


g193530

**Figure 47**

6. Dispose of the used oil at a recycling center.

# Servicing the Spark Plug(s)

**Service Interval:** Every 100 hours/Yearly (whichever comes first)—For Toro engines—check the spark plug(s).

Every 200 hours/Every 2 years (whichever comes first)—For Toro engines—replace the spark plug(s).

Ensure that the air gap between the center and side electrodes is correct before installing the spark plug. Use a spark plug wrench for removing and installing the spark plug and a gapping tool or feeler gauge to check and adjust the air gap. Install a new spark plug if necessary.

**Type:** Champion® RN9YC or NGK® BPR6ES

**Air gap:** 0.75 mm (0.03 inch)

## Removing the Spark Plug(s)

1. Park the machine on a level surface, engage the parking brake (if applicable), and lower the boom.
2. Shut off the engine and remove the key.
3. Locate and remove the spark plug(s) as shown in Figure 37.

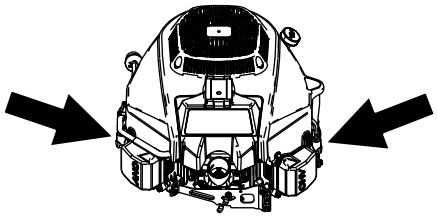

g252453

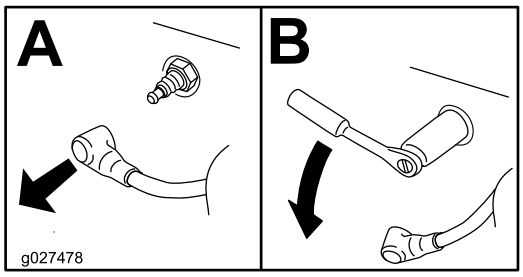


g027478

**Figure 48**

## Checking the Spark Plug(s)

***Important:*** **Do not clean the spark plug(s). Always replace the spark plug(s) when it has: a black coating, worn electrodes, an oily film, or cracks.**

If you see light brown or gray on the insulator, the engine is operating properly. A black coating on the insulator usually means the air cleaner is dirty.

Set the gap to 0.75 mm (0.03 inch).

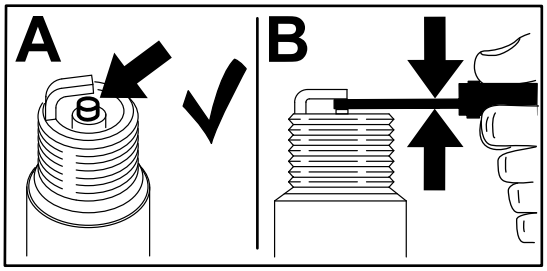


g206628

**Figure 49**

## Installing the Spark Plug(s)

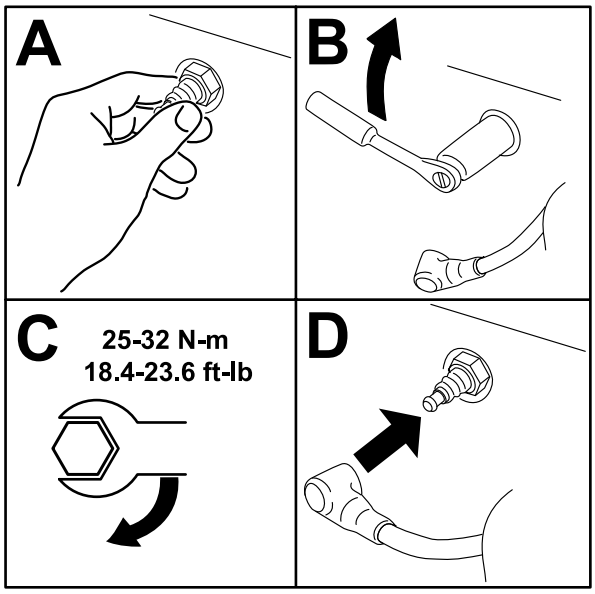


g273509

**Figure 50**

# *Fuel System Maintenance*

**⚠ DANGER**

**In certain conditions, fuel is extremely flammable and highly explosive. A fire or explosion from fuel can burn you and others and can damage property.**

**Refer to Adding Fuel (page 18) for a complete list of fuel related precautions.**

## Using the Fuel-Shutoff Valve

Close the fuel-shutoff valve for transport, maintenance, and storage. Ensure that the fuel-shutoff valve is open when starting the engine.

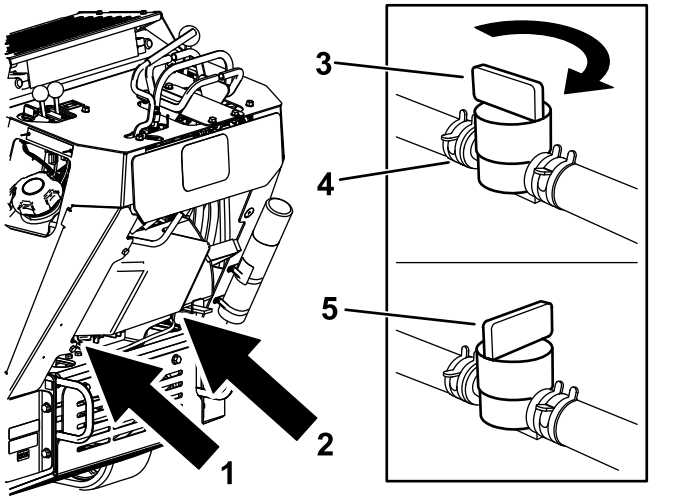


**Figure 51**

1. Location for Kohler engines
2. Location for Toro engines
3. Open position
4. Hose clamp (2)
5. Closed position

## Draining the Fuel Tank

1. Park the machine on a level surface, engage the parking brake, and lower the boom.
2. Shut off the engine and remove the key.
3. Turn the fuel-shutoff valve to the closed position (Figure 51).
4. Squeeze the ends of the hose clamp on the engine side of the valve together and slide it up the fuel line away from the valve (Figure 51).
5. Pull the fuel line off the valve (Figure 51).
6. Open the fuel-shutoff valve and allow the fuel to drain into a fuel can or drain pan.

   **Note:** If desired, you can replace the fuel filter at this time; refer to Replacing the Fuel Filter (page 39).
7. Install the fuel line onto the fuel-shutoff valve. Slide the hose clamp close to the valve to secure the fuel line.
8. Wipe up any spilled fuel.

# Replacing the Fuel Filter

**Service Interval:** Every 200 hours

Never install a dirty filter if it is removed from the fuel line.

**Note:** Note how the fuel filter is installed in order to install the new filter correctly.

**Note:** Wipe up any spilled fuel.

1. Park the machine on a level surface, engage the parking brake, and lower the boom.
2. Shut off the engine and remove the key.
3. Turn the fuel shutoff valve to the closed position (Figure 51).
4. Replace the fuel filter (Figure 52).

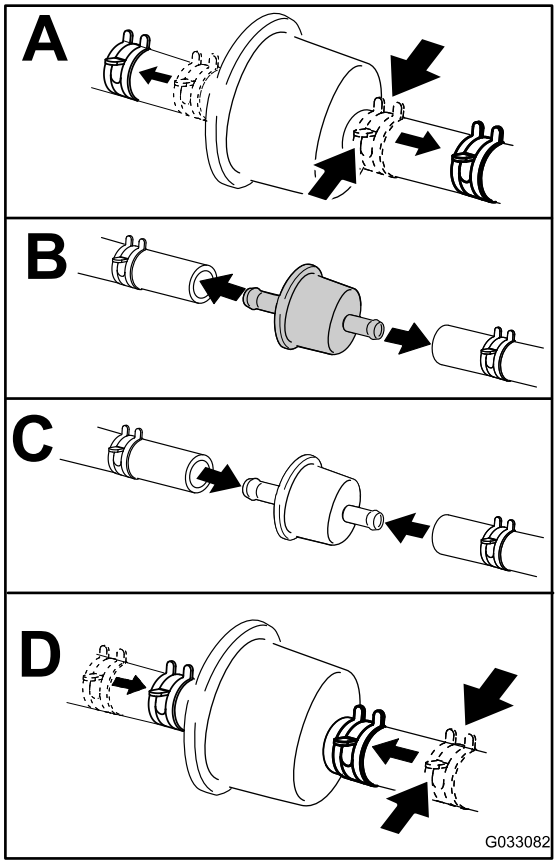


g033082

**Figure 52**

Filter for Toro engine shown

5. Turn the fuel shutoff valve to the open position (Figure 51).
6. Check for fuel leaks and repair if needed.
7. Wipe up any spilled fuel.

# *Electrical System Maintenance*

## Electrical System Safety

- Disconnect the battery before repairing the machine. Disconnect the negative terminal first and the positive last. Connect the positive terminal first and the negative last.
- Charge the battery in an open, well-ventilated area, away from sparks and flames. Unplug the charger before connecting or disconnecting the battery. Wear protective clothing and use insulated tools.
- Battery acid is poisonous and can cause burns. Avoid contact with skin, eyes, and clothing. Protect your face, eyes, and clothing when working with a battery.
- Battery gases can explode. Keep cigarettes, sparks, and flames away from the battery.

## Servicing the Battery

Voltage: 12 V with 350 A (cold cranking) at -18°C (0ºF).

**⚠ WARNING**

**Battery terminals or metal tools could short against metal machine components, causing sparks. Sparks can cause the battery gasses to explode, resulting in personal injury.**

- **When removing or installing the battery, do not allow the battery terminals to touch any metal parts of the machine.**
- **Do not allow metal tools to short between the battery terminals and metal parts of the machine.**

### Removing the Battery

1. Park the machine on a level surface, engage the parking brake, and lower the boom.
2. Shut off the engine and remove the key.
3. Lift the black rubber cover on the negative cable. Disconnect the negative battery cable from the negative (-) battery terminal (Figure 53).

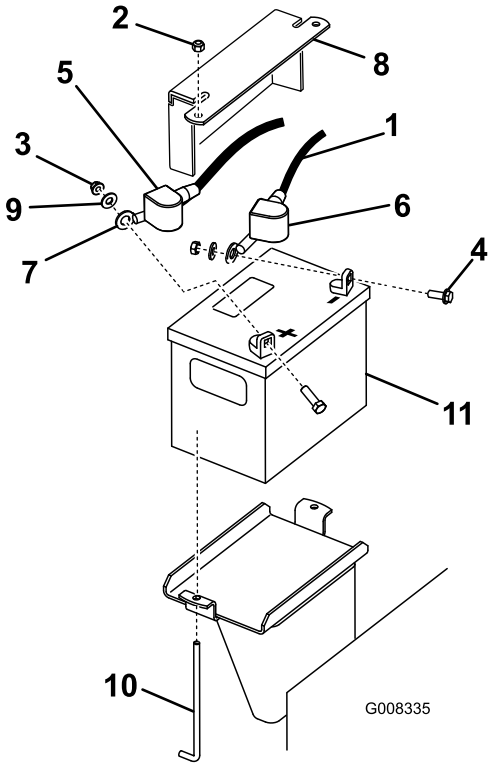


g008335

**Figure 53**

1. Negative cable
2. Nut (1/4 inch)
3. Nut (5/16 inch)
4. Bolt
5. Rubber cover (red)
6. Rubber cover (black)
7. Positive cable
8. Battery hold down plate
9. Washer
10. J-bolt
11. Battery

4. Slide the red terminal boot off the positive (red) battery terminal. Then remove the positive (red) battery cable (Figure 53).
5. Remove the hold-down plate, J-bolts, and locknuts securing the battery (Figure 53). Remove the battery.

# Charging the Battery

**⚠ WARNING**

**Charging the battery produces gasses that can explode.**

**Never smoke near the battery and keep sparks and flames away from battery.**

***Important:*** **Always keep the battery fully charged (1.265 specific gravity). This is especially important to prevent battery damage when the temperature is below 0°C (32°F).**

1. Remove the battery from the machine; refer to Removing the Battery (page 39).
2. Charge the battery for 4 to 8 hours at a rate of 3 to 4 A (Figure 54). Do not overcharge the battery.

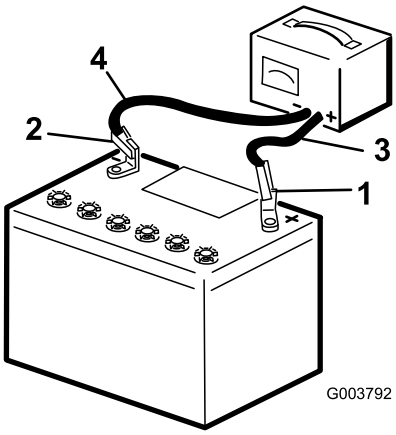


g003792

**Figure 54**

1. Positive battery post
2. Negative battery post
3. Red (+) charger lead
4. Black (-) charger lead

3. When the battery is fully charged, unplug the charger from the electrical outlet, then disconnect the charger leads from the battery posts (Figure 54).

# Cleaning the Battery

**Note:** Keep the terminals and the entire battery case clean, because a dirty battery discharges slowly.

1. Park the machine on a level surface, engage the parking brake, and lower the boom.
2. Shut off the engine and remove the key.
3. Remove the battery from the machine; Removing the Battery (page 39).
4. Wash the entire case with a solution of 4 parts water and 1 part baking soda.

5. If the batteries are corroded, clean them with a battery cleaner or a solution of 4 parts water and 1 part baking soda.
6. Rinse the battery with clear water.
7. Coat the battery posts and cable connectors with Grafo 112X (skin-over) grease (Toro Part No. 505-47) or petroleum jelly to prevent corrosion.
8. Install the battery; refer to Installing the Battery (page 41).

## Installing the Battery

1. Using the fasteners previously removed, install the positive (red) battery cable to the positive (+) battery terminal (Figure 53).
2. Slide the red terminal boot onto the positive battery post.
3. Using the fasteners previously removed, install the negative (black) battery cable to the negative (-) battery terminal (Figure 53).
4. Secure the battery using the bar and wing nuts (Figure 53).

***Important:*** **Ensure that the battery cables do not contact any sharp edges or each other.**

## Servicing a Replacement Battery

The original battery is maintenance-free and does not require service. The following procedures are for servicing a replacement battery.

**⚠ DANGER**

**Battery electrolyte contains sulfuric acid which is fatal if consumed and causes severe burns.**

- **Do not drink electrolyte and avoid contact with skin, eyes or clothing. Wear safety glasses to shield your eyes and rubber gloves to protect your hands.**
- **Fill the battery where clean water is always available for flushing the skin.**

### Checking the Battery Electrolyte Level

**Service Interval:** Every 25 hours (replacement batteries only).

1. Park the machine on a level surface, engage the parking brake, and lower the boom.
2. Shut off the engine and remove the key.
3. Look at the side of the battery. The electrolyte must be up to the **upper** line (Figure 55). Do not allow the electrolyte to fall below the lower line (Figure 55).

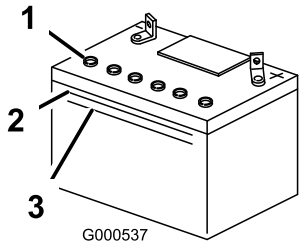


g000537

**Figure 55**

1. Vent caps
2. Upper line
3. Lower line

4. If the electrolyte is low, add the required amount of distilled water; refer to Adding Water to the Battery (page 41).

## Adding Water to the Battery

The best time to add distilled water to the battery is just before you operate the machine. This lets the water mix thoroughly with the electrolyte solution.

1. Park the machine on a level surface, engage the parking brake, and lower the boom.
2. Shut off the engine and remove the key.
3. Remove the battery from the machine; refer to Removing the Battery (page 39).

   ***Important:*** **Never fill the battery with distilled water while the battery is installed in the machine. Electrolyte could spill on other parts and cause corrosion.**
4. Clean the top of the battery with a paper towel.
5. Remove the vent caps from the battery (Figure 55).
6. Slowly pour distilled water into each battery cell until the electrolyte level is up to the Upper line (Figure 55) on the battery case.

   ***Important:*** **Do not overfill the battery; electrolyte (sulfuric acid) can cause severe corrosion and damage to the chassis.**
7. Wait 5 to 10 minutes after filling the battery cells. Add distilled water, if necessary, until the electrolyte level is up to the Upper line (Figure 55) on the battery case.
8. Install the battery vent caps.

# Replacing the Fuses

1. Park the machine on a level surface, engage the parking brake (if applicable), and lower the boom.
2. Shut off the engine and remove the key.
3. Remove the bolt and access panel on the right side of the machine (Figure 56).

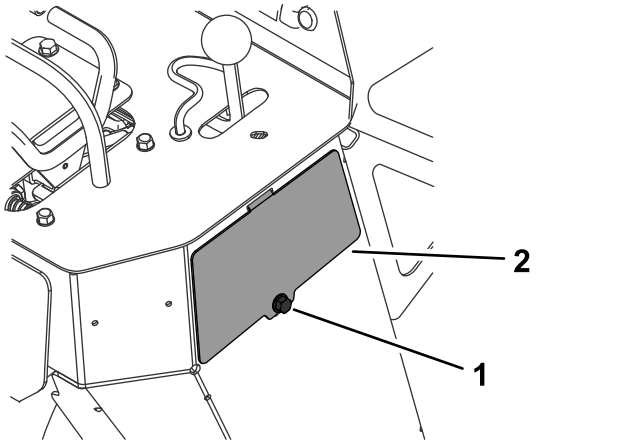


g259092

**Figure 56**

1. Bolt
2. Access panel

4. Replace any blown fuses (Figure 57).

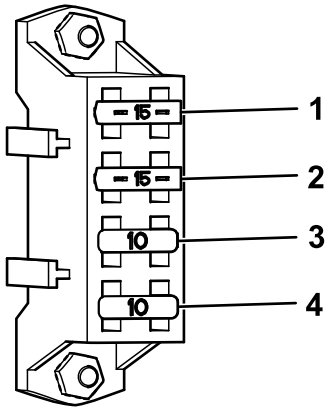


g259093

**Figure 57**

1. Fan— (15 A, Model 22984 only)
2. Fan— (15 A)
3. Accessory—(10 A)
4. Main power (10 A)

5. Install the access panel and secure it with the bolt (Figure 56).

# *Drive System Maintenance*

# Servicing the Tracks

## Cleaning the Tracks

**Service Interval:** Before each use or daily

Check the tracks for excessive wear and clean them periodically. If the tracks are worn, replace them.

1. Park the machine on a level surface, engage the parking brake, and lower the boom.
2. Shut off the engine and remove the key.
3. Using a water hose or pressure washer, remove dirt from each track system.

***Important:*** **Use care when using a high-pressure washer, because it can damage decals, the engine, and electrical and hydraulic systems, and it can deplete grease. Ensure that the fuel-tank cap and oil cap/dipstick are secure to avoid getting water in the engine. Keep water away from electrical items and hydraulic valves.**

***Important:*** **Ensure that you fully clean the road wheels and the drive wheel (Figure 58). The road wheels should rotate freely when clean.**

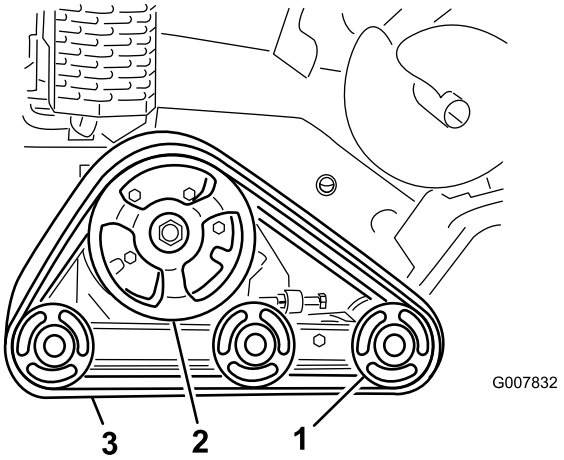


g007832

**Figure 58**

1. Road wheels
2. Drive wheel
3. Track

# Checking and Adjusting the Track Tension

**Service Interval:** After the first 50 hours

Every 100 hours

To check the tension of each track, place 20.4 kg (45 lb) on the track midway between the front road wheel and the drive wheel. The track should flex no more than 0.6 to 1 cm (1/4 to 3/8 inch). If it does, adjust the track tension using the following procedure:

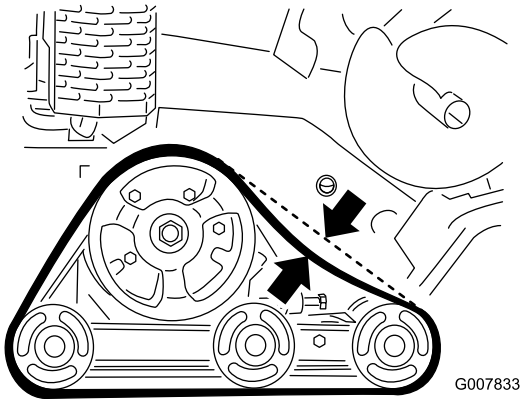


**Figure 59**

1. Park the machine on a level surface, engage the parking brake, and lower the boom.
2. Shut off the engine and remove the key.
3. Loosen the jam nut on the track tensioning bolt and the clamp bolts on the tension arm (Figure 60).

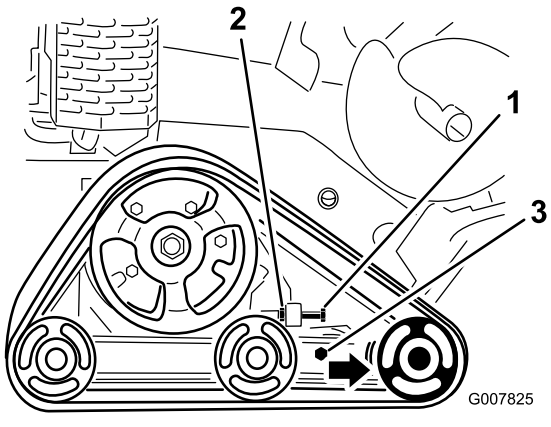


**Figure 60**

1. Tensioning bolt
2. Jam nut
3. Clamp bolts

4. Torque the tensioning bolt to 32.5 to 40 N·m (24 to 30 ft-lb) to tighten the track (Figure 60).
5. Ensure that the track deflects less than 0.6 to 1 cm (1/4 to 3/8 inch) when 20.6 kg (45 lb) of force is applied to the track span. Adjust the torque on the tensioning bolt as needed.
6. Tighten the jam nut.
7. Tighten the clamp bolts and torque to 102 N·m (75 ft-lb).

# Replacing the Tracks

When the tracks are badly worn, replace them.

1. Park the machine on a level surface, engage the parking brake, and lower the boom.
2. Shut off the engine and remove the key.
3. Lift and support the side of the unit to be worked on so that the track is 7.6 to 10 cm (3 to 4 inches) off the ground.
4. Back out the tensioning bolt and jam nut (Figure 60).
5. Loosen the clamp bolts (Figure 60).
6. Push the front road wheel rearward as far as it can goes (Figure 61).

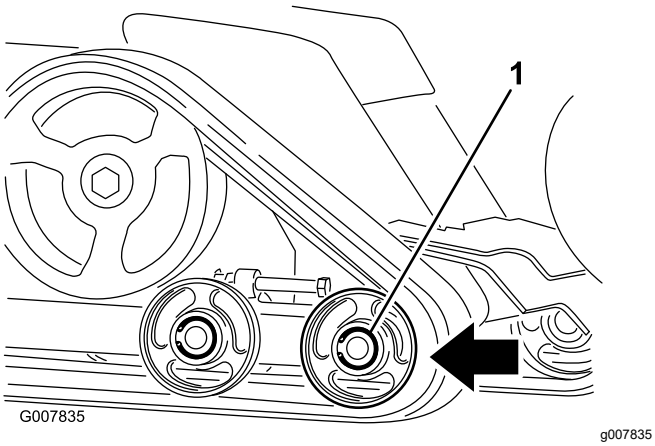


**Figure 61**

1. Front road wheel

7. Begin removing the track at the top of the front road wheel, peeling it off the wheel while rotating the track forward.

   **Note:** You may need to remove the front, outside road wheel. To remove it, remove the snap ring and cap from the center of the road wheel (Figure 62). Next remove the bolt and gasket from the center of the wheel and pull the wheel off the machine.

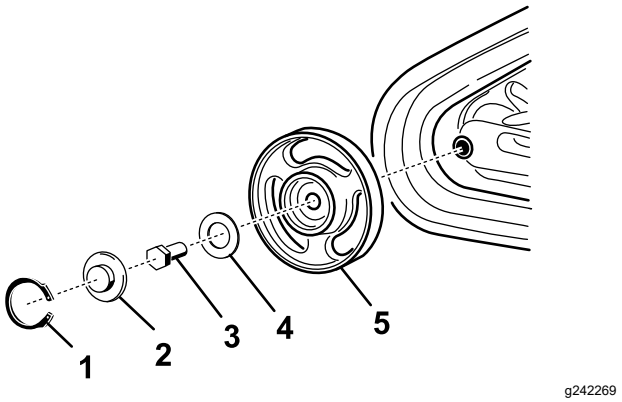


**Figure 62**

1. Snap ring
2. Cap
3. Bolt
4. Gasket
5. Wheel with bearings

8. When the track is off the road wheel, remove it from the machine (Figure 61).
9. Beginning at the drive wheel, coil the new track around the wheel, ensuring that the lugs on the track fit between the spacers on the wheel (Figure 61).
10. Push the track under and between the rear and center road wheels (Figure 61).
11. Starting at the bottom of the front road wheel, install the track around the wheel by rotating the track rearward while pushing the lugs into the wheel.
12. If you removed the front, outside road wheel, install it at this time using the bolt and gasket removed previously. Torque the bolt to 102 N·m (75 ft-lb) and then clean, grease, and install the cap and snap ring as instructed in the Checking and Greasing the Road Wheels (page 45).
13. Install the tensioning bolt and jam nut.
14. Torque the tensioning bolt to 32.5 to 40 N·m (24 to 30 ft-lb) to tighten the track.
15. Ensure that the track deflects less than 0.6 to 1 cm (1/4 to 3/8 inch) when 20.6 kg (45 lb) of force is applied to the track span. Adjust the torque on the tensioning bolt as needed.
16. Tighten the jam nut.
17. Tighten the clamp bolts and torque to 102 N·m (75 ft-lb).
18. Lower the machine to the ground.
19. Repeat the procedure to replace the other track.

## Checking and Greasing the Road Wheels

**Service Interval:** Every 250 hours

1. Park the machine on a level surface, engage the parking brake, and lower the boom.
2. Shut off the engine and remove the key.
3. Remove the tracks; refer to Replacing the Tracks (page 44).
4. Remove the snap ring and cap from a road wheel (Figure 63).

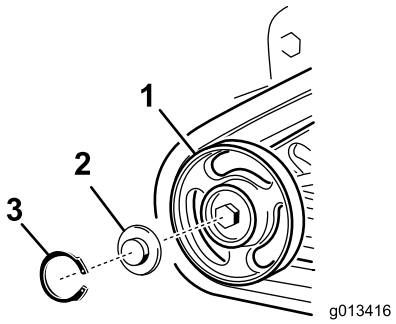


g013416

**Figure 63**

1. Road wheel
2. Road wheel cap
3. Snap ring

5. Check the grease under the cap and around the gasket (Figure 63). If it is dirty, gritty, or depleted, clean out all of the grease, replace the gasket, and add new grease.
6. Ensure that the road wheel turns smoothly on the bearing. If it is frozen, contact your Authorized Service Dealer to replace the road wheel.
7. Place the greased road wheel cap over the bolt head (Figure 63).
8. Secure the road wheel cap with the snap ring (Figure 63).
9. Repeat steps 4 through 8 for all 12 road wheels.
10. Install the tracks; refer to Replacing the Tracks (page 44).

# *Brake Maintenance*

## Testing the Parking Brake

**Service Interval:** Before each use or daily

1. Engage the parking-brake; refer to Controls (page 15).
2. Start the engine.
3. Slowly attempt to drive the machine forward or rearward.
4. If the machine moves, contact your Authorized Service Dealer for service.

# Hydraulic System Maintenance

## Hydraulic System Safety

- Seek immediate medical attention if fluid is injected into skin. Injected fluid must be surgically removed within a few hours by a doctor.
- Ensure that all hydraulic-fluid hoses and lines are in good condition and all hydraulic connections and fittings are tight before applying pressure to the hydraulic system.
- Keep your body and hands away from pinhole leaks or nozzles that eject high-pressure hydraulic fluid.
- Use cardboard or paper to find hydraulic leaks.
- Safely relieve all pressure in the hydraulic system before performing any work on the hydraulic system.

## Hydraulic Fluid Specifications

Every 1,500 hours/Every 2 years (whichever comes first)—Replace all moving hydraulic hoses.

**Hydraulic Tank Capacity:** 23 L (6 US gallons)

Use only 1 of the following fluids in the hydraulic system:

- **Toro Premium Transmission/Hydraulic Tractor Fluid** (refer to your Authorized Service Dealer for more information)
- **Toro PX Extended Life Hydraulic Fluid** (refer to your Authorized Service Dealer for more information)
- If either of the above Toro fluids are not available, you may use another **Universal Tractor Hydraulic Fluid (UTHF)**, but they must be only **conventional, petroleum-based** products. The specifications must fall within the listed range for all the following material properties and the fluid should meet the listed industry standards. Check with your hydraulic fluid supplier to determine if the fluid meets these specifications.

  **Note:** Toro will not assume responsibility for damage caused by improper substitutions, so use only products from reputable manufacturers who will stand behind their recommendations.

| **Material Properties** | |
|---|---|
| Viscosity, ASTM D445 | cSt at 40°C: 55 to 62 |
| | cSt at 100°C: 9.1 to 9.8 |
| Viscosity index, ASTM D2270 | 140 to 152 |
| Pour Point, ASTM D97 | -37 to -43°C (-35 to -46°F) |
| **Industry Standards** | |
| API GL-4, AGCO Powerfluid 821 XL, Ford New Holland FNHA-2-C-201.00, Kubota UDT, John Deere J20C, Vickers 35VQ25 and Volvo WB-101/BM | |

**Note:** Many hydraulic fluids are almost colorless, making it difficult to spot leaks. A red dye additive for the hydraulic system fluid is available in 20 ml (0.67 fl oz) bottles. One bottle is sufficient for 15 to 22 L (4 to 6 US gallons) of hydraulic fluid. Order Part No. 44-2500 from your Authorized Service Dealer.

## Checking the Hydraulic-Fluid Level

**Service Interval:** Every 25 hours

Refer to Hydraulic Fluid Specifications (page 46).

1. Park the machine on a level surface, engage the parking brake (if applicable), and lower the boom.
2. Shut off the engine and remove the key.
3. Look into the glass bubble on the right side of the machine. If you cannot see hydraulic fluid in the bubble, continue this procedure to add fluid.

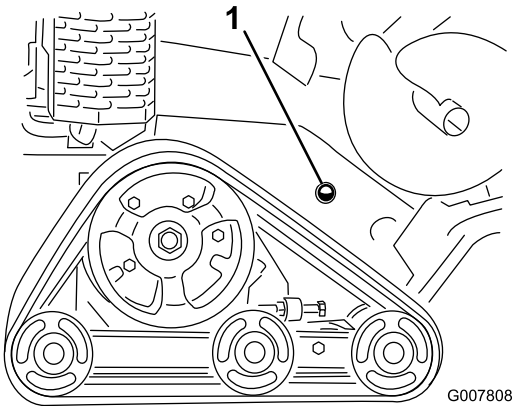


g007808

**Figure 64**

1. Hydraulic-fluid check bubble

4. Remove the cover plate; refer to Removing the Cover Plate (page 27).
5. Clean the area around the filler neck of the hydraulic tank and remove the cap and filter from the filler neck using a socket (Figure 65).

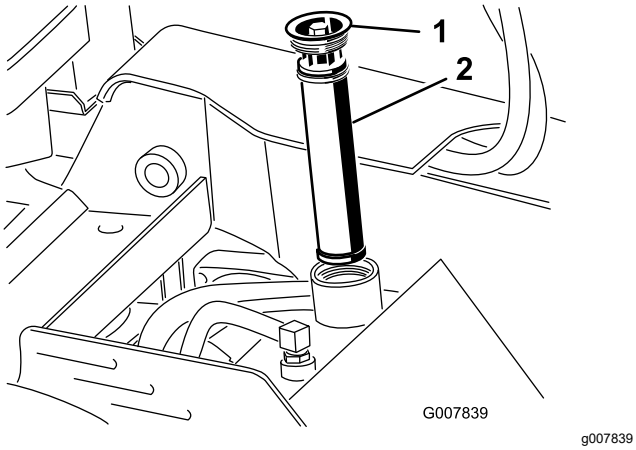


**Figure 65**

1. Filler-neck cap
2. Hydraulic-fluid filter

6. If the level is low, add fluid until it is visible in the glass bubble.
7. Install the cap and filter on the filler neck and torque bolt on top to 13 to 15.5 N·m (110 to 140 in-lb).
8. Install the cover plate; refer to Removing the Cover Plate (page 27).

# Replacing the Hydraulic Filter

**Service Interval:** Every 200 hours

1. Park the machine on a level surface, engage the parking brake (if applicable), and lower the boom.
2. Shut off the engine and remove the key.
3. Remove the cover plate; refer to Removing the Cover Plate (page 27).
4. Remove and discard the old filter (Figure 66).

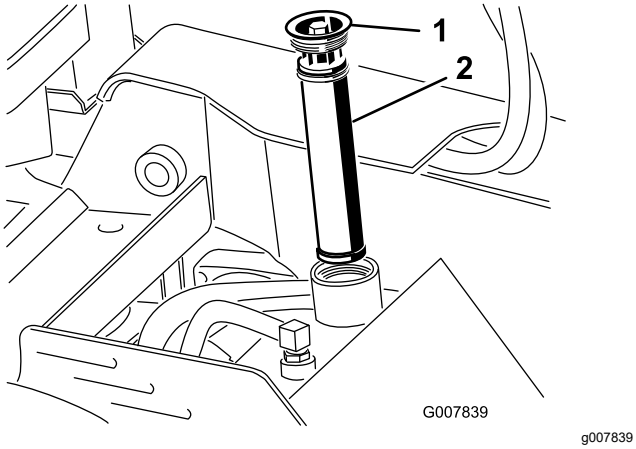


**Figure 66**

1. Filler cap
2. Hydraulic filter

5. Install the replacement hydraulic filter and filler cap (Figure 66) and torque the bolt on top to 13 to 15.5 N·m (110 to 140 in-lb).
6. Clean up any spilled fluid.
7. Install the top cover.

# Changing the Hydraulic Fluid

**Service Interval:** Every 400 hours/Yearly (whichever comes first)

1. Park the machine on a level surface, engage the parking brake (if applicable), and lower the boom.
2. Shut off the engine and remove the key.
3. Allow the machine to cool completely.
4. Raise the machine and support it using jackstands rated for the machine.
5. Remove the cover plate; refer to Removing the Cover Plate (page 27).
6. Remove the bottom shield; refer to Removing the Bottom Shield (page 27).
7. Remove the hydraulic-tank filler cap and filter (Figure 66).
8. Place a drain pan capable of holding 37.8 L (10 US Gallons) under the drain plug.
9. Remove the drain plug and allow the hydraulic fluid to drain into the pan (Figure 67).

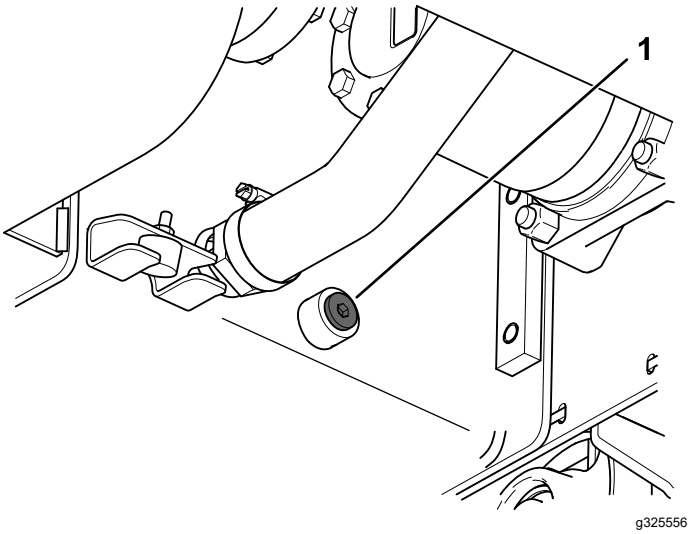


**Figure 67**

1. Drain plug

10. When finished, install the drain plug.

    **Note:** Dispose of the used oil at a certified recycling center.

11. Fill the hydraulic tank with hydraulic fluid; refer to Hydraulic Fluid Specifications (page 46).
12. Install the hydraulic filter and filler cap (Figure 66) and torque the bolt on top to 13 to 15.5 N·m (110 to 140 in-lb).
13. Start the engine and let it run for a few minutes.
14. Shut off the engine.
15. Check the hydraulic-fluid level and top it off if necessary; refer to Checking the Hydraulic-Fluid Level (page 46).
16. Clean up any spilled fluid.
17. Install the top cover and bottom shield.
18. Lower the machine.

# *Trencher Maintenance*

## Replacing the Digging Teeth

**Service Interval:** Before each use or daily—Check the condition of the digging teeth and replace any that are worn or damaged.

Due to the high amount of wear placed on the digging teeth, you will need to replace them periodically.

To replace a single tooth, remove the bolts securing the tooth to remove it, then install a new tooth in the same position. Torque the bolts securing the teeth to 37 to 45 N·m (27 to 33 ft-lb).

## Checking and Adjusting the Digging Chain and Boom

**Service Interval:** Every 25 hours

- Check each link in the chain for excessive wear, such as links that can no longer hold teeth.
- Inspect the bottom of the boom for wear.
- With the trencher boom parallel to the ground, ensure that there are 3.8 to 6.3 cm (1-1/2 to 2-1/2 inches) between the bottom of the boom and the top of the bottom chain span. If not, adjust the chain tension.

  ***Important:*** **Do not overtighten the chain. Excessive chain tension may damage drive components.**

To replace a worn chain, flip or replace a worn boom, or adjust the chain tension, use the following procedure:

1. Park the machine on a level surface, engage the parking brake, and lower the boom.
2. Shut off the engine and remove the key.
3. If you are replacing the chain or flipping or replacing the boom, complete the following:

   A. Remove the 2 bolts and nuts securing the boom to the trencher arm (Figure 67).

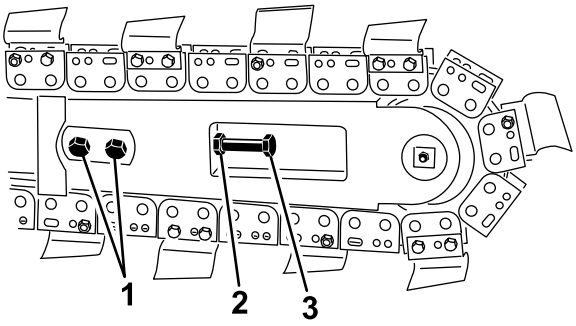


**Figure 68**

1. Bolts
2. Jam nut
3. Adjusting bolt

B. Loosen the jam nut on the adjusting bolt in the boom.

C. Loosen the adjusting bolt until you can remove the chain from the boom.

D. Remove the chain from the drive sprocket.

E. If the chain needs replacing, remove the bolt and nut securing the spoils auger and remove the auger and chain.

F. Remove the boom, flip it over so the bottom becomes the top (or if you have already flipped it once, replace it), and install the boom again.

G. Replace the nuts, bolts, and washers to secure the boom.

H. If you are installing a new chain, connect the links by pressing or hammering the clevis pin supplied with the chain through the links, then secure the clevis pin with the cotter pin supplied with the chain.

***Important:*** **To avoid bending the chain links, place blocks under and between the links when hammering the clevis pin through.**

I. Install the chain over the drive sprocket and front roller.

J. If you removed the spoils auger, install it using the bolt and nut you removed previously. Torque the bolt and nut to 102 N·m (75 ft-lb).

K. Skip to step 6 to complete the adjustment.

4. Loosen the 2 bolts and nuts securing the boom to the trencher arm
5. Loosen the jam nut securing the adjustment bolt.
6. Turn the adjustment bolt in or out as needed to achieve the desired tension.
7. Tighten the jam nut.
8. Torque the 2 bolts and nuts securing the boom to 183 to 223 N·m (135 to 165 ft-lb).

# Replacing the Drive Sprocket

Over time, the drive sprocket wears, especially when it is used in sandy or clay soils. When this happens, the digging chain begins to slip. If the chain slips, replace the drive sprocket as follows:

1. Park the machine on a level surface, engage the parking brake
2. Raise the trencher a few inches above the ground.
3. Shut off the engine and remove the key.
4. Remove the spoils auger (Figure 69).

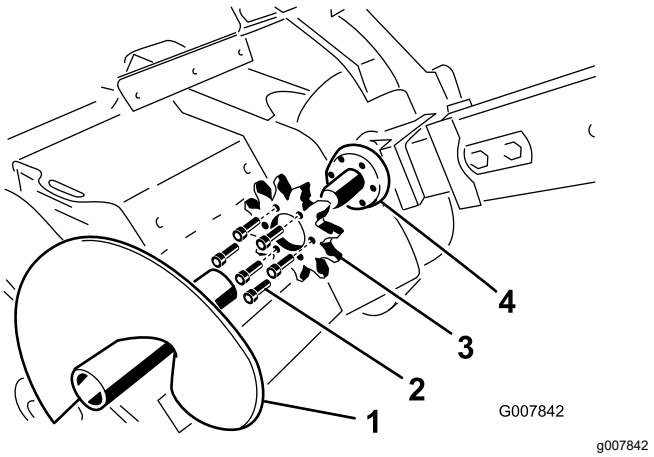


**Figure 69**

1. Spoils auger
2. Bolts
3. Drive sprocket
4. Sprocket mounting surface

5. Loosen the 2 bolts and nuts securing the boom to the trencher arm.
6. Loosen the jam nut on the adjusting bolt in the boom.
7. Loosen the adjusting bolt until you can remove the chain from the boom.
8. Remove the chain from the drive sprocket.
9. Remove the 6 bolts securing the drive sprocket (Figure 69).
10. Remove and discard the drive sprocket (Figure 69).
11. Clean the sprocket mounting surface on the trencher (Figure 69).

12. Slide the new sprocket onto the shaft (Figure 69).

    ***Important:*** **The arrow on the sprocket face should be visible from the right side of the trench and should point in a clockwise direction; if not, turn the sprocket around.**

13. Thread the 6 bolts into the sprocket finger tight (Figure 69).

14. Slowly begin tightening the bolts progressing around the sprocket until all bolts are torqued to 129 to 155 N·m (95 to 115 ft-lb).

    ***Important:*** **Tighten each bolt only halfway first, working your way around the 6 bolts, then return to each bolt in turn and torque them**

15. Loop the chain over the auger drive shaft and onto the drive sprocket, ensuring that the teeth point forward on the upper span.

16. Set the upper span of the chain into place on the trencher boom, then wrap the chain around the roller at the end of the boom.

17. Thread the adjustment bolt into the boom and turn it in until there is 3.8 to 6.3 cm (1-1/2 to 2-1/2 inches) of slack in the chain on the bottom span.

18. Thread the jam nut down the adjusting bolt and tighten it securely against the boom.

19. Torque the 2 bolts and nuts securing the boom to 183 to 223 N·m (135 to 165 ft-lb).

20. Install the spoils auger using the bolt and nut you removed previously.

    **Note:** Torque the bolt and nut to 102 N·m (75 ft-lb).

# *Cleaning*

## Removing Debris from the Machine

**Service Interval:** After each use

***Important:*** **Use care when using a high-pressure washer, because it can damage decals, the engine, and electrical and hydraulic systems, and it can deplete grease. Ensure that the fuel-tank cap and oil cap/dipstick are secure to avoid getting water in the engine. Keep water away from electrical items and hydraulic valves.**

***Important:*** **Operating the engine with blocked screens, dirty or plugged cooling fins, and/or cooling shrouds removed will result in engine damage from overheating.**

1. Park the machine on a level surface, engage the parking brake (if applicable), and lower the boom.
2. Shut off the engine, remove the key, and wait for the engine to cool.
3. Wipe away debris from the air cleaner.
4. Clean any debris buildup on the engine and muffler with a brush or blower.

   ***Important:*** **It is preferable to blow dirt out, rather than washing it out. If you use water, keep it away from electrical items and hydraulic valves. Do not use a high-pressure washer on the engine.**

5. Clean debris from the oil cooler.

# Storage

1. Park the machine on a level surface, engage the parking brake, and lower the boom.
2. Shut off the engine, remove the key, and wait for the engine to cool.
3. Remove dirt and grime from the external parts of the entire machine, especially the engine. Clean dirt and chaff from the outside of the engine cylinder head fins and blower housing.

   ***Important:*** **You can wash the machine with mild detergent and water. Do not pressure-wash the machine. Avoid excessive use of water, especially near the control panel, engine, hydraulic pumps, and motors.**
4. Service the air cleaner; refer to Engine Maintenance (page 29).
5. Grease the machine; refer to Lubrication (page 28).
6. Change the crankcase oil; refer to Engine Maintenance (page 29).
7. Remove the spark plug and check the condition of it; refer to Engine Maintenance (page 29).
8. For storage over 30 days, prepare the machine as follows:
   A. Add fuel stabilizer/conditioner to fresh fuel in the tank. Follow the mixing instructions from the fuel-stabilizer manufacturer. Do not use an alcohol-based stabilizer (ethanol or methanol).
   B. Run the engine to distribute conditioned fuel through the fuel system for 5 minutes.
   C. Shut off the engine, allow it to cool, and drain the fuel tank using a pump type syphon.
   D. Start the engine and run it until it shuts off.
   E. Engage the choke.
   F. Start and run the engine until it does not start again.
   G. Dispose of fuel properly. Recycle according to local codes.

   ***Important:*** **Do not store fuel containing stabilizer/conditioner longer than the duration recommended by the fuel-stabilizer manufacturer.**
9. With the spark plug removed from the engine, pour 2 tablespoons of engine oil into the spark-plug hole.
10. Place a rag over the spark-plug hole to catch any oil spray, then use the starter or recoil handle to crank the engine and distribute the oil inside the cylinder.
11. Install the spark plug, but do not install the wire on the spark plug.
12. Charge the battery; refer to Charging the Battery (page 40).
13. Check and adjust the track tension; refer to Checking and Adjusting the Track Tension (page 43).
14. Check and adjust the digging chain tension; refer to Checking and Adjusting the Digging Chain and Boom (page 48).
15. Check and tighten all fasteners. Repair or replace any part that is damaged.
16. Paint all scratched or bare metal surfaces with paint available from your Authorized Service Dealer.
17. Store the machine in a clean, dry garage or storage area. Remove the key from the ignition switch and keep it in a memorable place.
18. Cover the machine to protect it and keep it clean.

# Troubleshooting

| Problem | Possible Cause | Corrective Action |
|---|---|---|
| The starter does not crank. | 1. The battery is discharged.<br>2. The electrical connections are corroded or loose.<br>3. The relay or switch is damaged. | 1. Charge the battery or replace it.<br>2. Check the electrical connections for good contact.<br>3. Contact your Authorized Service Dealer. |
| The engine does not start, starts hard, or fails to keep running. | 1. The fuel tank is empty.<br>2. The fuel-shutoff valve is closed.<br>3. The controls are not in neutral.<br>4. The choke is not on.<br>5. The air cleaner is dirty.<br>6. The spark-plug wire is loose or disconnected.<br>7. The spark plug is pitted, fouled, or the gap is incorrect.<br>8. Dirt, water, or stale fuel is in fuel system. | 1. Fill the tank with fresh fuel.<br>2. Open the fuel-shutoff valve.<br>3. Move the controls to neutral.<br>4. Move the choke lever fully forward.<br>5. Clean or replace the air-cleaner elements.<br>6. Install the wire on the spark plug.<br>7. Install a new, correctly gapped spark plug.<br>8. Contact your Authorized Service Dealer. |
| The engine loses power. | 1. The engine load is excessive.<br>2. The air cleaner is dirty.<br>3. The oil level in the crankcase is low.<br>4. The cooling fins and air passages under the engine blower housing are plugged.<br>5. The spark plug is pitted, fouled, or the gap is incorrect.<br>6. Dirt, water, or stale fuel is in the fuel system. | 1. Reduce the ground speed.<br>2. Clean or replace the air-cleaner elements.<br>3. Check and add oil to the crankcase.<br>4. Remove any obstructions from the cooling fins and air passages.<br>5. Install a new, correctly gapped spark plug.<br>6. Contact your Authorized Service Dealer. |
| The engine overheats. | 1. The engine load is excessive.<br>2. The oil level in crankcase is low.<br>3. The cooling fins and air passages under the engine blower housing are plugged. | 1. Reduce the ground speed.<br>2. Check and add oil to the crankcase.<br>3. Remove any obstructions from the cooling fins and air passages. |
| There is abnormal vibration. | 1. The engine mounting bolts are loose. | 1. Tighten the engine mounting bolts. |
| The machine does not drive. | 1. The parking brake is engaged.<br>2. The hydraulic-fluid level is low.<br>3. The tow valves are open.<br>4. The hydraulic system is damaged. | 1. Disengage the parking brake.<br>2. Check and add hydraulic fluid.<br>3. Close the tow valves.<br>4. Contact your Authorized Service Dealer. |
| The chain does not turn. | 1. Sand or debris has built up in a tooth root of the drive sprocket.<br>2. The digging chain is too tight.<br>3. The trencher boom end bearing has failed.<br>4. The trencher drive system is damaged.<br>5. The hydraulic system is obstructed, contaminated, or damaged. | 1. Run the chain backward and then reduce the chain tension.<br>2. Adjust the digging chain tension.<br>3. Contact your Authorized Service Dealer.<br>4. Contact your Authorized Service Dealer.<br>5. Contact your Authorized Service Dealer. |

| Problem | Possible Cause | Corrective Action |
|---|---|---|
| The trencher does not dig fast enough. | 1. The digging teeth are worn.<br>2. The chain you are using is not appropriate for the type of ground.<br>3. The hydraulic system is overheated.<br>4. The hydraulic system is obstructed, contaminated, or damaged. | 1. Replace the digging teeth.<br>2. Evaluate the ground type and change chains if necessary.<br>3. Shut down and allow the system to cool.<br>4. Contact your Authorized Service Dealer. |
| The malfunction indicator light (MIL) comes on (Kohler machines only). | 1. The engine is too hot.<br>2. There is old fuel in the fuel tank.<br>3. The fuel-shutoff valve is not open completely.<br>4. The air cleaner is dirty.<br>5. The battery is not charged.<br>6. Incorrect fuel filters are being used or the fuel filters are dirty.<br>7. The connections to the sensors electronic control unit (ECU) and fuel injectors are not secured properly.<br>8. There is low voltage from the battery.<br>9. A fuse is blown. | 1. Turn the engine off and let it cool.<br>2. Use new fuel.<br>3. Open the fuel-shutoff valve.<br>4. Make sure that the air cleaner and precleaner are clean. Replace them if necessary.<br>5. Charge or replace the battery.<br>6. Contact an Authorized Service Dealer.<br>7. Contact an Authorized Service Dealer.<br>8. Ensure that the battery is fully charged.<br>9. Check and replace any blown fuses. |

# Notes:

# Notes:

# California Proposition 65 Warning Information

## What is this warning?

You may see a product for sale that has a warning label like the following:



**WARNING:** Cancer and Reproductive Harm—www.p65Warnings.ca.gov.

## What is Prop 65?

Prop 65 applies to any company operating in California, selling products in California, or manufacturing products that may be sold in or brought into California. It mandates that the Governor of California maintain and publish a list of chemicals known to cause cancer, birth defects, and/or other reproductive harm. The list, which is updated annually, includes hundreds of chemicals found in many everyday items. The purpose of Prop 65 is to inform the public about exposure to these chemicals.

Prop 65 does not ban the sale of products containing these chemicals but instead requires warnings on any product, product packaging, or literature with the product. Moreover, a Prop 65 warning does not mean that a product is in violation of any product safety standards or requirements. In fact, the California government has clarified that a Prop 65 warning "is not the same as a regulatory decision that a product is 'safe' or 'unsafe.'" Many of these chemicals have been used in everyday products for years without documented harm. For more information, go to https://oag.ca.gov/prop65/faqs-view-all.

A Prop 65 warning means that a company has either (1) evaluated the exposure and has concluded that it exceeds the "no significant risk level"; or (2) has chosen to provide a warning based on its understanding about the presence of a listed chemical without attempting to evaluate the exposure.

## Does this law apply everywhere?

Prop 65 warnings are required under California law only. These warnings are seen throughout California in a wide range of settings, including but not limited to restaurants, grocery stores, hotels, schools, and hospitals, and on a wide variety of products. Additionally, some online and mail order retailers provide Prop 65 warnings on their websites or in catalogs.

## How do the California warnings compare to federal limits?

Prop 65 standards are often more stringent than federal and international standards. There are various substances that require a Prop 65 warning at levels that are far lower than federal action limits. For example, the Prop 65 standard for warnings for lead is 0.5 µg/day, which is well below the federal and international standards.

## Why don't all similar products carry the warning?

- Products sold in California require Prop 65 labelling while similar products sold elsewhere do not.
- A company involved in a Prop 65 lawsuit reaching a settlement may be required to use Prop 65 warnings for its products, but other companies making similar products may have no such requirement.
- The enforcement of Prop 65 is inconsistent.
- Companies may elect not to provide warnings because they conclude that they are not required to do so under Prop 65; a lack of warnings for a product does not mean that the product is free of listed chemicals at similar levels.

## Why does Toro include this warning?

Toro has chosen to provide consumers with as much information as possible so that they can make informed decisions about the products they buy and use. Toro provides warnings in certain cases based on its knowledge of the presence of one or more listed chemicals without evaluating the level of exposure, as not all the listed chemicals provide exposure limit requirements. While the exposure from Toro products may be negligible or well within the "no significant risk" range, out of an abundance of caution, Toro has elected to provide the Prop 65 warnings. Moreover, if Toro does not provide these warnings, it could be sued by the State of California or by private parties seeking to enforce Prop 65 and subject to substantial penalties.