Operator's Manual

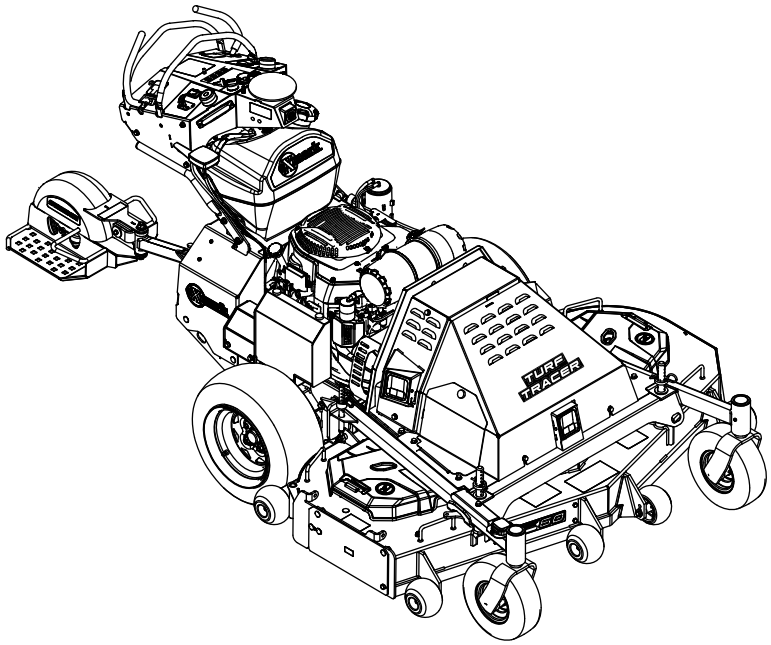

TURF TRACER®
AUTONOMOUS

For Serial Nos.
420,130,747 & Higher
Part No. 3480-618 Rev. A

⚠ WARNING

CALIFORNIA
Proposition 65 Warning

The engine exhaust from this product contains chemicals known to the State of California to cause cancer, birth defects, or other reproductive harm.

Battery posts, terminals, and related accessories contain lead and lead compounds, chemicals known to the State of California to cause cancer and reproductive harm. Wash hands after handling.

Use of this product may cause exposure to chemicals known to the State of California to cause cancer, birth defects, or other reproductive harm.

Important: It is a violation of California Public Resource Code Section 4442 or 4443 to use or operate the engine on any forest-covered, brush-covered, or grass-covered land unless the engine is equipped with a spark arrester, as defined in Section 4442, maintained in effective working order or the engine is constructed, equipped, and maintained for the prevention of fire.

To acquire a spark arrester for your unit, see your Engine Service Dealer.

For all models that do not have Exmark engines, please refer to the engine manufacturer's information included with the machine.

For models with Exmark engines, refer to this manual for information.

The gross or net horsepower (or torque) of this engine was laboratory rated by the engine manufacturer in accordance with the Society of Automotive Engineers (SAE) J1940 or J2723. As configured to meet safety, emission, and operating requirements, the actual engine horsepower (or torque) on this class of mower will be significantly lower.

Original Instructions (EN)

This device complies with Part 15 of the FCC Rules. Operation is subject to the following two conditions: (1) this device may not cause harmful interference, and (2) this device must accept any interference received, including any interference that may cause undesired operation.

Electromagnetic Compatibility Certification

CONTAINS FCC ID: OF7-NVG2	IC: 3575A-NVG2
CONTAINS FCC ID: 2ANOS-S201A	IC: 27966-SBV0

⚠ WARNING

The user that changes or modifications not expressly approved by Exmark could void the user's authority to operate the equipment.

Note: This equipment has been tested and found to comply with the limits for a Class B digital device, pursuant to part 15 of the FCC Rules. These limits are designed to provide reasonable protection against harmful interference in a residential installation. This equipment generates, uses and can radiate radio frequency energy and, if not installed and used in accordance with the instructions, may cause harmful interference to radio communications. However, there is no guarantee that interference will not occur in a particular installation. If this equipment does cause harmful interference to radio or television reception, which can be determined by turning the equipment off and on, the user is encouraged to try to correct the interference by one or more of the following measures:

- Reorient or relocate the receiving antenna.
- Increase the separation between the equipment and receiver.
- Connect the equipment into an outlet on a circuit different from that to which the receiver is connected.
- Consult the dealer or an experienced radio/TV technician for help.

This device contains licence-exempt transmitter(s)/receiver(s) that comply with Innovation, Science and Economic Development Canada's licence-exempt RSS(s). Operation is subject to the following two conditions: (1) This device may not cause interference. (2) This device must accept

©2026 Exmark Mfg. Co., Inc.
415 Industrial Row
Beatrice, NE 68310

Contact us at www.Exmark.com.
Printed in the USA
All Rights Reserved

any interference, including interference that may cause undesired operation of the device.

This radio transmitter [IC: 3575A-NVG2] has been approved by Innovation, Science and Economic Development Canada to operate with the antenna types listed below, with the maximum permissible gain indicated. Antenna types not included in this list that have a gain greater than the maximum gain indicated for any type listed are strictly prohibited for use with this device.

Manufacturer	The Toro Company
Antenna	161-7450
Description	Antenna–Cell/WiFi
Type	Omnidirectional
Peak Gain (dBi)	3.2

Introduction

CONGRATULATIONS on the purchase of your Exmark Mower. This product has been carefully designed and manufactured to give you a maximum amount of dependability and years of trouble-free operation.

This robotic lawn mower is intended to be used by professional, hired operators for autonomous, programmable turf care in commercial applications. It is designed primarily for cutting grass on well-maintained turf on residential or commercial properties that meet Exmark requirements detailed in **Autonomous Operating Area Criteria** (page 33). Using this product for purposes other than its intended use or on properties that do not meet the requirements, could prove dangerous to you and bystanders, including but not limited to co-workers.

This manual contains operating, maintenance, adjustment, and safety instructions for your Exmark mower.

BEFORE OPERATING YOUR MOWER, CAREFULLY READ THIS MANUAL IN ITS ENTIRETY.

By following the operating, maintenance, and safety instructions, you will prolong the life of your mower, maintain its maximum efficiency, and promote safe operation.

To maximize safety, performance, and proper operation of this machine, it is essential that all operators carefully read and fully understand the contents of the Operator's manual provided with the product. Failure to comply with the operating instructions or receive proper training may result in injury. Go to https://www.Exmark.com for additional safe operation information, such as safety tips, training materials, and Operator's manuals.

If additional information is needed, or should you require trained mechanic service, contact your authorized Exmark equipment dealer or distributor.

All Exmark equipment dealers and distributors are kept informed of the latest methods of servicing and are equipped to provide prompt and efficient service in the field or at their service stations. They carry ample stock of service parts or can secure them promptly for you from the factory.

All Exmark parts are thoroughly tested and inspected before leaving the factory, however, attention is required on your part if you are to obtain the fullest measure of satisfaction and performance.

Whenever you need service, genuine Exmark parts, or additional information, contact an Authorized Service Dealer or Exmark Customer Service and have the model and serial numbers of your product ready.

Figure 1 identifies the location of the model and serial numbers on the product. Write the numbers in the space provided.

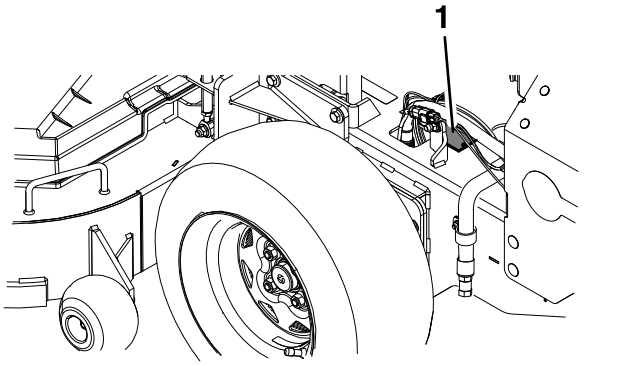

Figure 1

1. Model and serial number location

Model No. _____

Serial No. _____

For complete warranty details, see https://www.Exmark.com. You may also call us 402-223-6375 to request a written copy of the product's warranty.

Modes of Operation

This machine has been designed to perform two modes of operation:

- **Manual Mode:** Mode of machine operation in which machine functions are controlled by an operator.
- **Autonomous Mode:** A mode of machine operation in which a machine performs functions

related to its defined tasks without operator interaction, but instead its operation is monitored by a qualified supervisor.

Note: Refer to **Terminology** (page 5) for Autonomous operation definitions.

Terminology

Advisory—A message that informs the user of an operator error or anything that may cause a job to pause or halt and may require the user to intervene.

App—An abbreviation for ***software application***. A computer program on a mobile device that performs one or more tasks. Also called ***application or mobile app***.

Autonomous—Automated machine functions that operate in autonomous mode during all of the machine's operating cycles

Autonomous control system (ACS)—A system that controls all robotic functions.

Autonomous mode—A mode of machine operation in which a machine performs functions related to its defined tasks without operator interaction, but instead its operation is monitored by a qualified supervisor.

Base station—In the context of external land surveying, it is a GPS receiver at an accurately known, fixed location used to derive correction information for nearby portable GPS receivers. See also **Global Positioning System; GPS receiver**.

Boundary—Something that indicates or fixes a limit or extent. For a robot, it is the outside, no-cross line of an operating area, transit path or zone, or exclusion area. Also called perimeter. See also **operating area; exclusion area**.

Exclusion area—An area recorded by the operator that the robot shall not enter.

Fault—The result of a mechanical, sensor, or software error, which requires service or correction of the machine, sensor, or software code.

Global Navigation Satellite System (GNSS)—A general term describing the global set of constellations used for GPS positioning. See also **Global Positioning System**.

Global Positioning System (GPS)—A satellite-based navigation system that uses a digital signal from each satellite to send data to a receiver. This receiver can then determine its exact range from the satellite, as well as the geographic position (GP) of the satellite, which is the location on the earth directly below the satellite.

GNSS antenna—a device used for receiving and expanding radio signals sent by distinct frequencies coming from GPS satellites. See also **Global Navigation Satellite System (GNSS); Global Positioning System (GPS)**.

GNSS receiver—A device that can receive information from GNSS satellites and then calculate the geographical position of the device. Also called ***satellite navigation device***. See also **Global Navigation Satellite System**.

Job—The work being performed by a robot at one time inside an operating area.

Localization—The process of determining where a mobile robot is with respect to its environment. Localization is a most fundamental competency required by robot as the knowledge of its location is necessary for making decisions about future actions.

Manual mode—Mode of machine operation in which machine functions are controlled by an operator.

Mobile app—See **App**.

Navigation—The ability of a robot to determine its own position in its frame of reference and then to plan a path toward some goal location.

Obstacle—Object or ground condition which can cause harm, or is harmed, if it comes into contact or collision with the machinery.

Obstacle detection—The process of detecting objects or terrain types that impede a robot's motion.

Operating area—An area in which the robot can run autonomously. The area inside a boundary. Operating may be interchangeable with adjectives that describe the work, such as ***mowing***, ***clearing***, and ***trenching***.

Path—A route that a robot is programmed to travel. As part of a job, a path can connect multiple fields or paths.

Perimeter—See **Boundary**.

Real-time kinematics (RTK)—A real-time correction of position accuracy (less than 1 inch or 3 cm) using satellite messages to a moving machine, compared to that of a stationary base station. RTK

information can be sent to the machine by either a cellular connection or radio waves.

Robot—A machine designed to execute one or more tasks automatically. For example, a robot can sense, compute, and act. It must be able to have sensors that provide it with input and insights about the physical space around them. It must be able to compute to make decisions based on its programming and inputs. To be defined as a robot, it must be able to move in or change the physical world in some manner.

Satellite navigation device—See **GPS receiver**.

Sensing—The feedback from the environment of the robot, which enables the robot to react to its environment. Sensory inputs may come from a variety of sensor types.

Sensor—A device that responds to physical stimuli (including, but not limited to, heat, light, sound, pressure, magnetism, and motion) and transmits the resulting signal or data providing a measurement, operating a control, or both. For example, a sensor can estimate the condition of a robot and its environment. This information is sent to a controller to enable the appropriate behavior. A robot requires extensive information about its environment to function effectively.

User Definitions

Qualified machine supervisor (Supervisor)

One or more individuals having the responsibility of overseeing the operation of the machine(s). A supervisor will have demonstrated:

- Adequate machine control
- A general understanding of the energy, powertrain, and control systems of the machine(s)
- Been trained and read and understood the machine operator's manuals

Qualified manual operator (Operator)

One or more customer employees having the responsibility of manually driving the machine while it is in manual mode.

On-product emergency stop

An emergency-stop switch (e-stop) that is located on and attached to the machine.

Mobile device

A supervisor's mobile device (e.g., smart phone or tablet) that connects to the machine for programming, controlling, and monitoring the machine while it operates in autonomous mode. The device serves as the remote stop device that the supervisor must carry for stopping all functions of the machine(s) on command when necessary.

Line of sight supervision: A supervisor's ability to monitor the operation of the machine and surrounding conditions visually without obstruction.

The supervisor is required to remain in line of sight with the machine during autonomous operations. During autonomous operation, the supervisor must be able to see the machine operate.

Autonomous Site Assessment Criteria

Note: For optimal performance, the operating area should consist of large areas (quarter of an acre or larger) of turf with few obstacles.

Before enabling the machine to operate in autonomous mode, the operating area needs to meet the requirements in **Autonomous Operating Area Criteria** (page 33).

The first time the machine is brought to a job site, review the information stated in the **Initial Autonomous Site Assessment** (page 33) section.

When the machine is brought back to a recurrent autonomous site, the operating area must be inspected every time. It is the Supervisor's responsibility to verify that no new permanent objects need to be excluded, remove all temporary obstacles, and ensure that all new exclusion areas have been recorded prior to autonomous operation. Refer to **Recurrent Autonomous Site Assessment** (page 33).

Contents

Introduction 4
- Modes of Operation 4
- Terminology 5
- User Definitions 6
- Autonomous Site Assessment Criteria 7

Safety 9
- Safety Alert Symbol 9
- General Safety 9
- General Machine Safety Warnings 13
- Lawn Mower Safety Warnings 14
- Safety and Instructional Decals 16

Specifications 22
- Systems 22
- Dimensions 23
- Torque Requirements 24

Product Overview 24

Operation 25
- Controls 25
- Sensors 28
- Alerts and Alarms 29
- Message Display 30
- XiQ Mobile App 31
- Before Operation 32
- Supervisor Information 32
- Supervisor for Deployment and Operation of Machine 32
- Autonomous Operating Area Criteria 33
- During Operation 34
- Operating Instructions 34
- Operating Area– Autonomous Operation 38
- After Operation 41
- Transporting 41

Maintenance 43
- Maintenance Safety 43
- Recommended Maintenance Schedule(s) 43
- Periodic Maintenance 44
- Engine Maintenance 44
- Engine Safety 44
- Check Engine Oil Level 44
- Check Mower Blades 47
- Check Safety Interlock System 49
- Check for Loose Hardware 51
- Service Air Cleaner 51
- Change Engine Oil 51
- Changing the Transmission Fluid 51
- Check Tire Pressures 52
- Check Condition Of Belts 52
- Lubricate Grease Fittings 53
- Lubricate Caster Wheel Hubs 53
- Check Spark Plugs 54
- Checking the Spark Arrester 54
- Inspect StandOn 54
- Check StandOn for Buildup 55
- Thread Locking Adhesives 55
- General Purpose Grease (Or Food-Grade Anti-seize) 55
- Dielectric Grease 55

Adjustments 55
- Deck Leveling 55
- Generator Drive Belt Tension 55
- Deck Belt Tension 55
- Electric Clutch Adjustment 55
- Adjusting the Caster-Pivot Bearing 55
- Adjusting the Motion Control Levers 56
- StandOn Tire Adjustment 56

Cleaning 57
- Cleaning and Storing Safety 57
- Clean Debris From Machine 57
- Clean Engine and Exhaust System Area 57
- Clean Grass Build-Up Under Deck 57
- Waste Disposal 57

Troubleshooting 59

Schematics 62

California Proposition 65 Warning Information 63

Safety

Safety Alert Symbol

This Safety Alert Symbol (Figure 2) is used both in this manual and on the machine to identify important safety messages which must be followed to avoid accidents.

This symbol means: **ATTENTION! BECOME ALERT! YOUR SAFETY IS INVOLVED!**



g000502

Figure 2
Safety Alert Symbol

The safety alert symbol appears above information which alerts you to unsafe actions or situations and will be followed by the word **DANGER**, **WARNING**, or **CAUTION**.

DANGER: Indicates an imminently hazardous situation which, if not avoided, **Will** result in death or serious injury.

WARNING: Indicates a potentially hazardous situation which, if not avoided, **Could** result in death or serious injury.

CAUTION: Indicates a potentially hazardous situation which, if not avoided, **May** result in minor or moderate injury.

This manual uses two other words to highlight information. **Important** calls attention to special mechanical information and **Note** emphasizes general information worthy of special attention.

General Safety

This machine is capable of amputating hands and feet and of throwing objects. Always follow all safety instructions to avoid serious personal injury or death.

General Safety Information

- Read, understand, and follow all instructions and warnings in this guide and on the machine, engine, and attachments.
- Wear appropriate personal protective equipment such as safety glasses, long pants, substantial slip-resistant footwear, and hearing protection. Tie back long hair and avoid loose clothing and loose jewelry which may get tangled in moving parts.
- This machine produces sound levels in excess of 85 dBA at the operator's ear and can cause hearing loss through extended periods of exposure. Wear hearing protection when operating this machine.
- Do Not operate the machine near drop-offs, ditches, embankments, water, or other hazards.
- Keep bystanders, including co-workers, and children out of the operating area.
- Do Not put your hands or feet near moving parts.
- Do not modify the machine or software in any way.
- Do not put anything on the machine.
- Do not modify or override the machine controls or safety devices.
- Do Not operate the machine without all safety shields, guards, switches, and other devices in place and in proper working condition.
- Park machine on level ground, disengage drives, set parking brake, stop engine, and remove key. Wait for all moving parts to stop before leaving the operator's position. Allow the machine to cool before servicing, adjusting, fueling, cleaning, or storing.

Manual Mode Safety Information

- This mower was designed for one operator only.
- Do Not carry passengers.
- Practice operating the machine without the StandOn until familiar with the controls.
- Practice operating the machine with the StandOn attached on large, open, level terrain with no obstacles present before use. The StandOn will

affect the machine operation, especially on slopes, when turning, and when stopping.

- For operators over 250 lb (113 kg), it is recommended to use pneumatic tire assembly, P/N 103-3798, for the StandOn.

Autonomous Mode Safety Information

Important: This machine uses GNSS and RTK technology to establish the location of the machine. The machine needs to have a clear view of the sky to receive information from positioning satellites. While GNSS with RTK offers improved accuracy, it is sensitive to signal obstructions, particularly in urban areas with tall buildings or dense foliage.

Note: If you experience any unexpected behavior from your machine, please contact an Authorized Service Dealer.

- Do not stand, sit, or ride on the machine or allow others to do so while the machine is in autonomous mode.
- The StandOn must be in the stowed position or removed from the machine before autonomous operations can begin.
- Keep bystanders, including co-workers, a minimum of 20 feet (6 m) away from the machine while operating autonomously.
- Keep the mobile device on the supervisor and easily accessible when the machine is operating autonomously.
- Ensure the operating area meets the criteria in the **Autonomous Operating Area Criteria** (page 33).
- Autonomous mode requires that a qualified supervisor remain within the line of sight (see "**Line of sight supervision**" in **User Definitions** (page 6)) of the machine at all times while operating in autonomous mode.
- For the first mowing of all planned paths, pay extra attention to ensure that the recording and path planning are successfully completed. Make sure the machine can successfully complete the planned job without compromising performance and that the path as planned does not lead to unsafe operation during autonomous operation (i.e., the planned path does not allow the machine to exceed the limits as defined by the site assessment).

Before Operation Safety

- Do Not operate the mower when co-workers, people, especially children, or pets are in the area. Shut off the machine and attachment(s) if anyone enters the area.
- Do Not operate the machine without safety devices in place and in proper working condition. Frequently check for worn or deteriorating components and replace them with the manufacturer's recommended parts when necessary.
- Check the radar sensors and make sure they are clean of dirt, grass, leaves, and other debris.
- Know how to stop the machine and prevent any parts from moving.

Fuel Safety

⚠ DANGER

Gasoline is extremely flammable and vapors are explosive.

A fire or explosion from gasoline can burn you, others, and cause property damage.

- **Fill the fuel tank outdoors on level ground, in an open area, when the engine is cold. If fuel is spilled, Do Not attempt to start the engine. Move away from the area of the spill and avoid creating any source of ignition until fuel vapors have dissipated.**
- **Do Not refill the fuel tank or drain the machine indoors or inside an enclosed trailer.**
- **Never smoke when handling gasoline, and stay away from an open flame or where gasoline fumes may be ignited by spark.**
- **Add fuel before starting the engine. Never remove the cap of the fuel tank or add fuel when engine is running or when the engine is hot.**
- **Store gasoline in an approved container and keep it out of the reach of children.**
- **Do Not operate without entire exhaust system in place and in proper working condition.**
- In certain conditions during fueling, static electricity can be released causing a spark which can ignite gasoline vapors.

  - Do Not fill containers inside a vehicle or on a truck or trailer bed with a plastic liner. Always place containers on the ground and away from your vehicle before filling.
  - When practical, remove gas-powered equipment from the truck or trailer and refuel the equipment with its wheels on the ground. If this is not possible, then refuel such equipment on a truck or trailer from a portable container, rather than from a gasoline dispenser nozzle.
  - If a gasoline dispenser nozzle is used, keep the nozzle in contact with the rim of the fuel tank or container opening at all times until fueling is complete. Do Not use a nozzle lock open device.
- Do Not overfill the fuel tank. Fill the fuel tank to the bottom of the filler neck. The empty space in the tank allows gasoline to expand. Overfilling may result in fuel leakage or damage to the engine or emission system.
- Gasoline is harmful or fatal if swallowed. Long-term exposure to vapors may cause serious injury and illness.
  - Avoid prolonged breathing of vapors.
  - Keep face away from nozzle and gas tank/container opening.
  - Keep away from eyes and skin.
- To help prevent fires:
  - Keep engine and engine area free from accumulation of grass, leaves, excessive grease or oil, and other debris which can accumulate in these areas.
  - Clean up oil and fuel spills and remove fuel soaked debris.
  - Allow the machine to cool before storing the machine in any enclosure. Do Not store the machine or fuel container, or refuel, where there is an open flame, spark, or pilot light such as on a water heater or other appliance.

During Operation Safety

The operator and/or supervisor must use their full attention when operating the machine. **Do Not** engage in any activity that causes distractions; otherwise, injury or property damage may occur.

⚠ WARNING

Operating engine parts, especially the muffler, become extremely hot. Severe burns can occur on contact and debris, such as leaves, grass, brush, etc. can catch fire.

Clean the machine as stated in the Maintenance section. Keep engine and engine area free from accumulation of grass, leaves, excessive grease or oil, and other debris which can accumulate in these areas.

- Check the radar sensors and make sure they are clean of dirt, grass, leaves, and other debris.
- Operate the engine only in well-ventilated areas. Exhaust gases contain carbon monoxide, which is an odorless deadly poison.
- Do not operate the machine while ill, tired, or under the influence of alcohol or drugs.
- Operate the machine only in good visibility and appropriate weather conditions. Do Not operate the machine when there is the risk of lightning.
- Keep away from holes, ruts, bumps, rocks, and other hidden hazards. Use care when approaching blind corners, shrubs, trees, tall grass or other objects that may hide obstacles or obscure vision. Uneven terrain could overturn the machine or cause the operator to lose their balance or footing.
- Start the engine with your feet well away from the blades.
- Do Not operate the machine without all safety shields, guards, switches, and other devices in place and in proper working condition.
- Keep your hands and feet away from the moving parts.
- Never raise the deck with blades running.
- Stop the blades, slow down, and use caution when crossing surfaces other than grass and when transporting the mower to and from the area to be mowed.
- Be alert, slow down and use caution when making turns. Do Not mow in reverse unless it is absolutely necessary. Always look down and behind you before moving the machine in reverse.
- Park the machine on level ground. Stop engine, wait for all moving parts to stop, and remove key.
  - Before checking, cleaning or working on the mower.

  - After striking a foreign object or abnormal vibration occurs (inspect the mower for damage and make repairs before restarting and operating the mower).
  - Before clearing blockages.
  - Whenever you leave the mower. Do Not leave a running machine unattended.
- Stop engine, wait for all moving parts to stop:
  - Before refueling.
  - Before making height adjustments.
- Tragic accidents can occur if the operator and/or supervisor is not alert to the presence of children. Children are often attracted to the machine and the mowing activity. Never assume that children will remain where you last saw them.
  - Keep children out of the mowing/operating area and under the watchful care of another responsible adult, not the operator or supervisor.
  - Be alert and turn the machine off if children enter the area.
  - Before and while backing or changing direction, look behind, down, and side-to-side for small children.
  - Never allow children to operate the machine.
  - Do Not carry children, even with the blades shut off. Children could fall off and be seriously injured or interfere with the safe operation of the machine. Children that have been given rides in the past could suddenly appear in the operating area for another ride and be run over or backed over by the machine.
- If the machine rolls over, stay away from moving parts.

Slope Safety

- Slopes are a major factor related to loss of control and rollover accidents, which can result in severe injury or death. The operator is responsible for safe slope operation. Operating the machine on any slope requires extra caution. Before using the machine on a slope, the operator must:
  - Review and understand the slope instructions in the guide and on the machine.
  - Evaluate the site conditions of the day to determine if the slope is safe for machine operation. Use common sense and good judgment when performing this evaluation. Changes in the terrain, such as moisture, can quickly affect the operation of the machine on a slope.
- Operate across slopes, never up and down. Avoid operation on excessively steep or wet slopes. Poor footing could cause a slip and fall accident.
- Identify hazards at the base of the slope. Do Not operate the machine near drop offs, ditches, embankments, water or other hazards. The machine could suddenly roll over if a wheel goes over the edge or the edge collapses. Keep a safe distance between the machine and any hazard. Use a hand held tool to operate in these areas.
- Avoid starting, stopping or turning the machine on slopes. Avoid making sudden changes in speed or direction; turn slowly and gradually.
- Do Not operate a machine under any conditions where traction, steering or stability is in question. Be aware that operating the machine on wet grass, across slopes or downhill may cause the machine to lose traction. Loss of traction to the drive wheels may result in sliding and a loss of braking and steering. The machine can slide even if the drive wheels are stopped.
- Remove or mark obstacles such as ditches, holes, ruts, bumps, rocks or other hidden hazards. Tall grass can hide obstacles. Uneven terrain could overturn the machine.
- If you lose control of the machine, step away from the direction of travel of the machine.
- Always keep the machine in gear when going down slopes. Do Not coast downhill.

After Operation Safety

- Park machine on level ground, disengage drives, set parking brake, stop engine, and remove key. Wait for all moving parts to stop before leaving the operator's position. Allow the machine to cool before servicing, adjusting, fueling, cleaning, or storing.
- Clean grass, leaves, excessive grease or oil, and other debris from the mower deck, muffler, drives, and engine area to help prevent fires.

- Check the radar sensors and make sure they are clean of dirt, grass, leaves, and other debris after every operation.
- Close the fuel shut-off valve and turn the main power disconnect switch to "OFF" before storing or transporting the machine.

General Machine Safety Warnings

The term "machine" in all of the warnings listed below refers to your mains-operated (corded) machine or battery-operated (cordless) machine.

1. **Work area safety**
   - A. **Keep work area clean and well lit.** *Cluttered or dark areas invite accidents.*
   - B. **Do not operate the machine in explosive atmospheres, such as in the presence of flammable liquids, gasses, or dust.** *The machine creates sparks, which may ignite the dust or fumes.*
   - C. **Keep children and bystanders away while operating the machine.** *Distractions can cause you to lose control.*
2. **Electrical safety(AC Mains Connected Equipment)**
   - A. **Machine plugs must match the outlet. Never modify the plug in any way. Do not use any adapter plugs with an earthed (grounded) machine.** *Unmodified plugs and matching outlets will reduce risk of electric shock.*
   - B. **Avoid body contact with earthed or grounded surfaces, such as pipes, radiators, ranges, and refrigerators.** *There is an increased risk of electric shock if your body is earthed or grounded.*
   - C. **Do not expose the machine to rain or wet conditions.** *Water entering a machine will increase the risk of electric shock.*
   - D. **Do not abuse the cord. Never use the cord for carrying, pulling or unplugging the machine. Keep cord away from heat, oil, sharp edges, or moving parts.** *Damaged or entangled cords increase the risk of electric shock.*
   - E. **When operating the machine outdoors, use an extension cord suitable for outdoor use.** *Use of a cord suitable for outdoor use reduces the risk of electric shock.*
   - F. **If operating the machine in a damp location is unavoidable, use a residual current device (RCD) protected supply.** *Use of an RCD reduces the risk of electric shock.*
3. **Personal safety**
   - A. **Stay alert, watch what you are doing, and use common sense when operating the machine. Do not use the machine while you are tired or under the influence of drugs, alcohol, or medication.** *A moment of inattention while operating the machine may result in serious personal injury.*
   - B. **Use personal protective equipment. Always wear eye protection.** *Protective equipment such as a dust mask, non-skid safety shoes, or hearing protection used for appropriate conditions will reduce personal injuries.*
   - C. **Prevent unintentional starting. Ensure the switch is in the off-position before connecting to power source and/or battery pack.** *Energising a machine that has the switch on invites accidents.*
   - D. **Remove any adjusting key or wrench before turning the machine on.** *A wrench or a key left attached to a rotating part of the machine may result in personal injury.*
   - E. **Do not overreach. Keep proper footing and balance at all times.** *This enables better control of the machine in unexpected situations.*
   - F. **Dress properly. Do not wear loose clothing or jewelry. Keep your hair and clothing away from moving parts.** *Loose clothes, jewelry or long hair can be caught in moving parts.*
   - G. **If devices are provided for the connection of dust extraction and collection facilities, ensure these are connected and properly used.** *Use of dust collection can reduce dust-related hazards.*
   - H. **Do not let familiarity gained from frequent use of the machine allow you to become complacent and ignore machine safety principles.** *A careless action can cause severe injury within a fraction of a second.*
4. **Machine use and care**
   - A. **Do not force the machine. Use the correct machine for your application.** *The correct machine will do the job better and safer at the rate for which it was designed.*

B. **Do not use the machine if the switch does not turn it on and off.** *Any machine that cannot be controlled with the switch is dangerous and must be repaired.*

C. **Disconnect the plug from the power source and/or remove the battery pack, if detachable, from the machine before making any adjustments, changing accessories, or storing the machine.** *Such preventive safety measures reduce the risk of starting the machine accidentally.*

D. **Store an idle machine out of the reach of children and do not allow persons unfamiliar with the machine or these instructions to operate the machine.** *A machine is dangerous in the hands of untrained users.*

E. **Maintain the machine and accessories. Check for misalignment or binding of moving parts, breakage of parts and any other condition that may affect the operation of the machine. If damaged, have the machine repaired before use.** *Many accidents are caused by a poorly maintained machine.*

F. **Keep cutting tools sharp and clean.** *Properly maintained cutting tools with sharp cutting edges are less likely to bind and are easier to control.*

G. **Use the machine, accessories, and tool bits etc., in accordance with these instructions, taking into account the working conditions and the work to be performed.** *Use of the machine for operations different from those intended could result in a hazardous situation.*

H. **Keep handles and grasping surfaces dry, clean and free from oil and grease.** *Slippery handles and grasping surfaces do not allow for safe handling and control of the machine in unexpected situations.*

5. **Battery machine use and care**

A. **Recharge only with the charger specified by a manufacturer.** *A charger that is suitable for one type of battery pack may create a risk of fire when used with another battery pack.*

B. **Use the machine only with specifically designated batteries.** *Use of any other batteries may create a risk of injury and fire.*

C. **When battery pack is not in use, keep it away from other metal objects, like paper clips, coins, keys, nails, screws or other small metal objects, that can make a connection from one terminal to another.** *Shorting the battery terminals together may cause burns or a fire.*

D. **Under abusive conditions, liquid may be ejected from the battery; avoid contact. If contact accidentally occurs, flush with water. If liquid contacts eyes, additionally seek medical help.** *Liquid ejected from the battery may cause irritation or burns.*

E. **Do not use a battery pack or machine that is damaged or modified.** *Damaged or modified batteries may exhibit unpredictable behavior resulting in fire, explosion or risk or injury.*

F. **Do not expose a battery pack or machine to fire or excessive temperature.** *Exposure to fire temperature above 130°C may cause an explosion.*

G. **Follow all charging instructions and do not charge the battery pack or machine outside the temperature range specified in the instructions.** *Changing improperly or at temperatures outside the specified range may damage the battery and increase the risk of fire.*

6. **Service**

A. **Have your machine serviced by a qualified repair person using only identical replacement parts.** *This will ensure that the safety of the machine is maintained.*

B. **Never service damaged battery packs.** *Service of battery packs should be performed only by the manufacturer or authorized service providers.*

Lawn Mower Safety Warnings

1. **Do not use the lawnmower in bad weather conditions, especially when there is a risk of lightning.** *This decreases the risk of being struck by lightning.*

2. **Thoroughly inspect the area for wildlife where the lawnmower is to be used.** *Wildlife may be injured by the lawnmower during operation.*

3. **Thoroughly inspect the area where the lawnmower is to be used and remove all stones, sticks, wires, bones, and other foreign objects.** *Thrown objects can cause personal injury.*

4. **Before using the lawnmower, always visually inspect to see that the blade and the blade**

assembly are not worn or damaged. *Worn or damaged parts increase the risk of injury.*

5. **Keep guards in place. Guards must be in working order and be properly mounted.** *A guard that is loose, damaged, or is not functioning correctly may result in personal injury.*
6. **Keep all cooling air inlets clear of debris.** *Blocked air inlets and debris may result in overheating or risk of fire.*
7. **While operating the lawnmower, always wear non-slip and protective footwear. Do not operate the lawnmower when barefoot or wearing open sandals.** *This reduces the chance of injury to the feet from contact with the moving blade.*
8. **While operating the lawnmower, always wear long trousers.** *Exposed skin increases the likelihood of injury from thrown objects.*
9. **Do not operate the lawnmower on excessively steep slopes.** *This reduces the risk of loss of control, slipping and falling which may result in personal injury.*
10. **When working on slopes, always be sure of your footing, always work across the face of slopes, never up or down and exercise extreme caution when changing direction.** *This reduces the risk of loss of control, slipping and falling which may result in personal injury.*
11. **Use extreme caution when reversing or pulling the lawnmower towards you.** *Always be aware of your surroundings.*
12. **Do not touch blades and other hazardous moving parts while they are still in motion.** *This reduces the risk of injury from moving parts.*
13. **When clearing jammed material or cleaning the lawnmower, make sure all power switches are off and remove (or activate) the disabling device.** *Unexpected operation of the lawnmower may result in serious personal injury.*

Save all warnings and instructions for future reference.

Safety and Instructional Decals

- Keep all safety signs legible. Remove all grease, dirt and debris from safety signs and instructional labels.
- Replace all worn, damaged, or missing safety signs.
- When replacement components are installed, be sure that current safety signs are affixed to the replaced components.
- If an attachment or accessory has been installed, make sure current safety signs are visible.
- New safety signs may be obtained from your authorized Exmark equipment dealer or distributor or from Exmark Mfg. Co. Inc.
- Safety signs may be affixed by peeling off the backing to expose the adhesive surface. Apply only to a clean, dry surface. Smooth to remove any air bubbles.
- Familiarize yourself with the following safety signs and instruction labels. They are critical to the safe operation of your Exmark commercial mower.

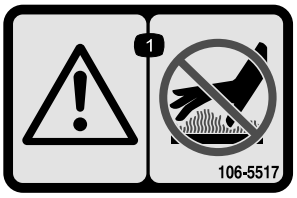

decal106-5517

106-5517

1. Warning—do not touch the hot surface.

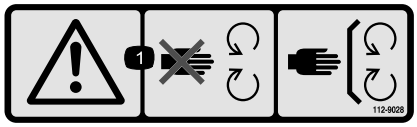

decal112-9028

112-9028

1. Warning—stay away from moving parts; keep all guards and shields in place.

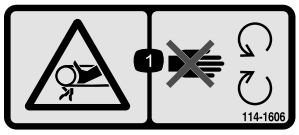

decal114-1606

114-1606

1. Entanglement hazard, belt—keep all guards in place.

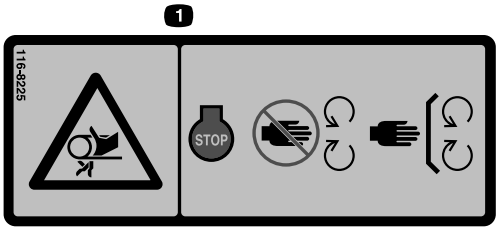

decal116-8225

116-8225

1. Entanglement hazard-Stop the engine before reaching underneath; stay away from moving parts; keep all guards in place.

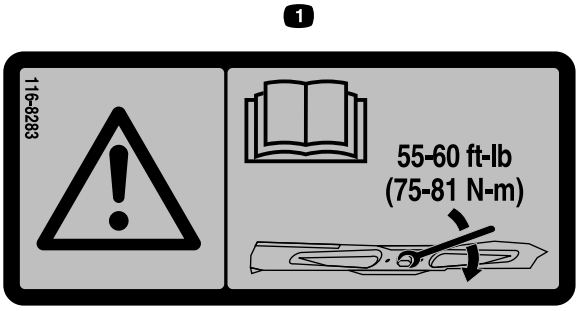

decal116-8283

116-8283

1. Warning—read the Operator's Manual for instructions on torquing the blade bolt/nut to 55-60 ft-lb (75-81 N-m).

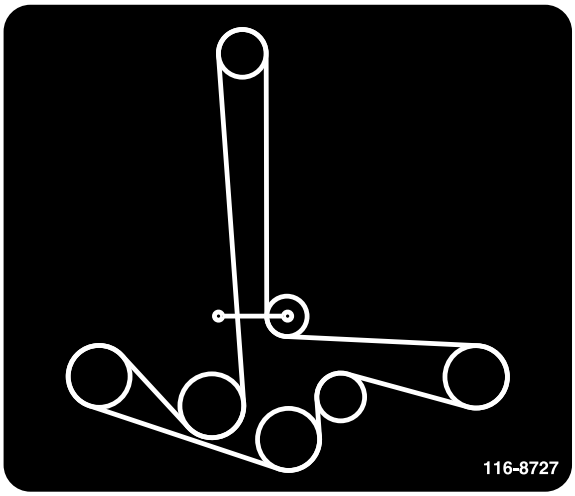

decal116-8727

116-8727

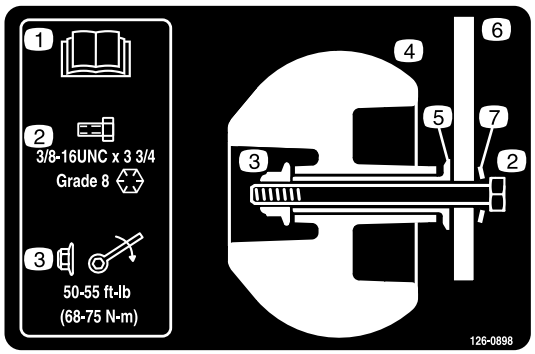

decal126-0898

126-0898

1. Read the Operator's manual
2. 3/8-16 x 3 3/4 inch bolt. Bolt must be Grade 8. Bolt and spring disc washer must be installed as shown.
3. Nyloc nut - torque to 50-55 ft-lb (68-75 N-m)
4. Roller
5. Bushing
6. Mount bracket
7. Spring disc washer

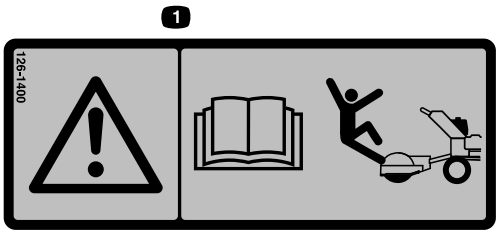

decal126-1400

126-1400

1. Warning—read the *Operator's Manual* for information about attachments; certain attachments can cause you to fall.



decal133-8061

133-8061



decal133-8062

133-8062

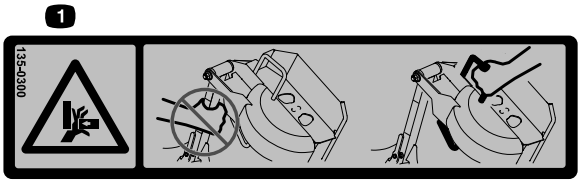

decal135-0300

135-0300

1. Pinch point hazard–Do Not use drawbar to lift StandOn/sulky. Only use platform side handles to lift and rotate StandOn/sulky.

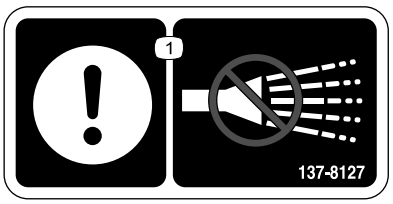

decal137-8127

137-8127

1. Attention—do not spray with high-pressure water.

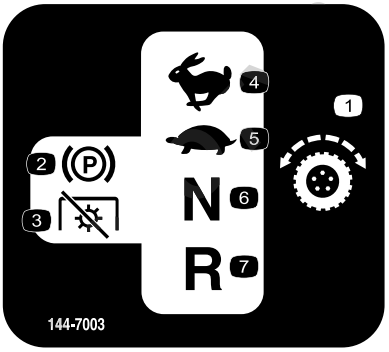

decal144-7003

144-7003

1. Traction drive
2. Parking brake
3. Power takeoff (PTO)—disengaged
4. Fast
5. Slow
6. Neutral
7. Reverse

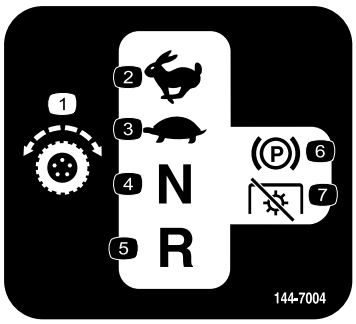

decal144-7004

144-7004

1. Traction drive
2. Fast
3. Slow
4. Neutral
5. Reverse
6. Parking brake
7. Power takeoff (PTO)—disengaged

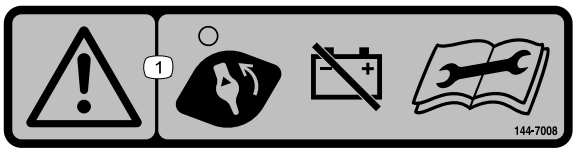

decal144-7008

144-7008

1. Warning—turn the battery-disconnect switch to the Off position before performing maintenance.

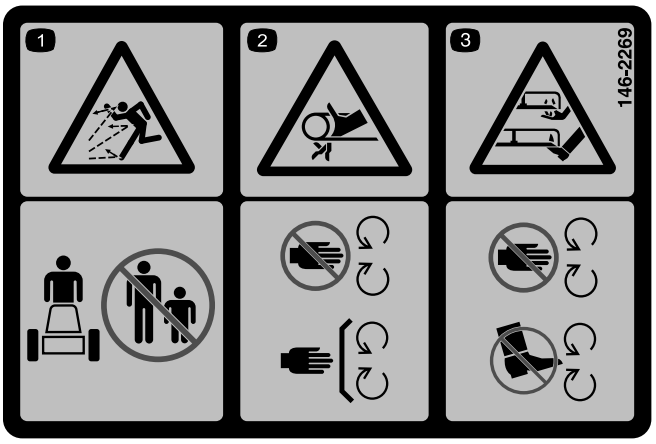

decal146-2269

146-2269

1. Thrown objects hazard - keep bystanders away.
2. Entanglement hazard of hands, belt - stay away from moving parts; keep all guards and shields in place.
3. Cutting/dismemberment of hand or feet, mower blade - stay away from moving parts; keep all guards and shields in place.

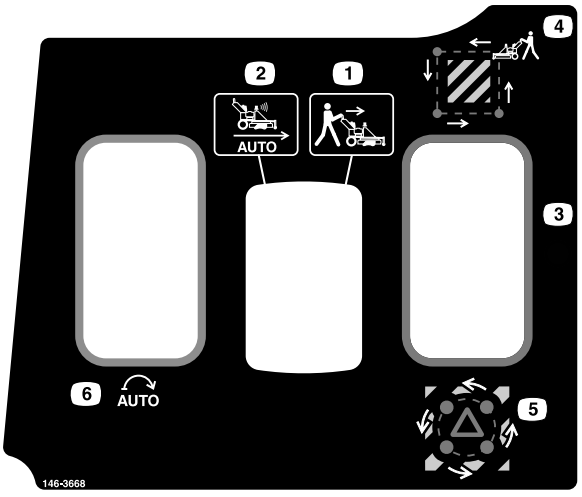

decal146-3668

146-3668

1. Manual Mode - Operator controlled
2. Auto Mode - Autonomous controlled
3. Record Mode
4. Record boundary
5. Record exclusion area
6. Autonomous start

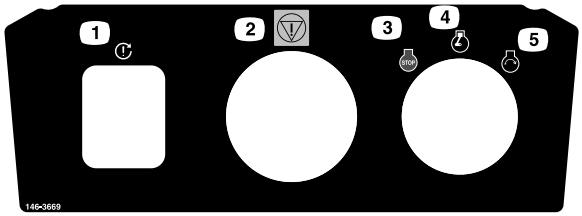

decal146-3669

146-3669

1. Fault clear button
2. Emergency stop
3. Engine–off
4. Engine–on
5. Engine–start

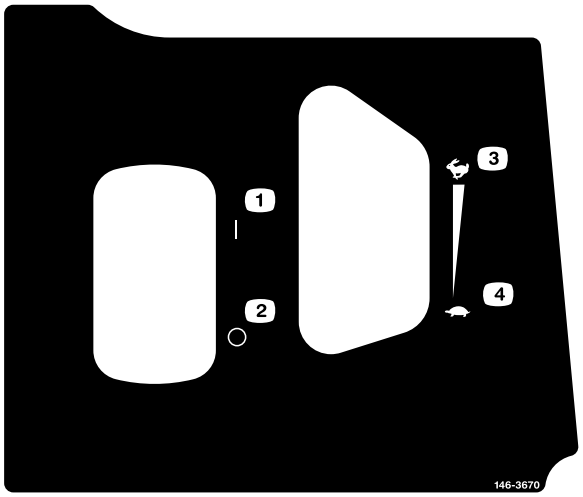

decal146-3670

146-3670

1. PTO–On
2. PTO–Off
3. Throttle-fast
4. Throttle–slow



decal146-3680

146-3680

1. Warning–Read the Operator's Manual. Do Not operate this machine unless you are trained. Wear hearing protection.
2. Warning–Stay away from moving parts; keep all guards in place. Stop engine and remove key before adjusting, servicing, or cleaning.
3. Thrown object hazard–Pick up objects that could be thrown by mower. Do Not operate when people and pets are in the area. Keep deflector in place.
4. Warning–Disengage PTO, move drive levers to neutral, and engage parking brake before leaving the operator's position.
5. Cutting/dismemberment hazard–Mow across slopes not up and down. Do Not mow wet slopes–use extreme caution when operating on slopes.

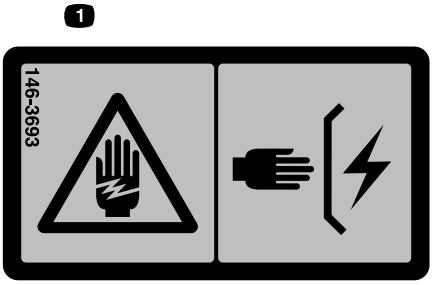

decal146-3693

146-3693

1. Electric shock hazard - Keep all guards and shields in place

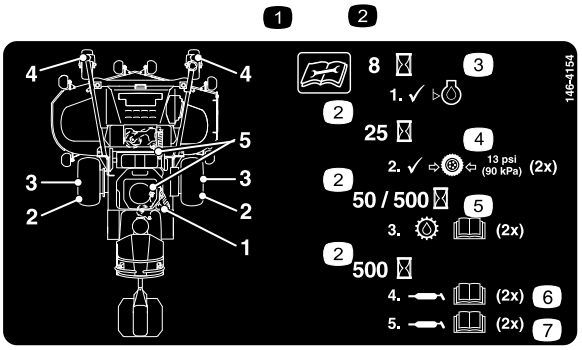

decal146-4154

146-4154

1. Read the instructions before servicing or performing maintenance
2. Time interval
3. Check oil level
4. Check tire pressure (2 locations)
5. Service the transmission oil; refer to the Operator's manual or further instructions (2 locations)
6. Grease the caster pivots (2 locations); refer to the Operator's Manual for further instructions
7. Grease belt idlers (2 locations); refer to the Operator's Manual for further instructions

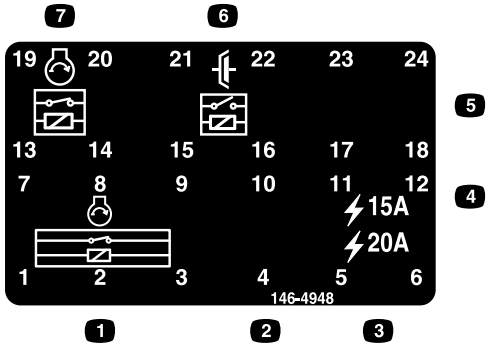

decal146-4948

146-4948

1. Pins 1,2,3,7,8,9: Ground S/D
2. Pins 4,10: Open
3. Pins 5-6: 12V Main fuse, 20A
4. Pins 11-12: 12V Accessory fuse, 15A
5. Pins 17,18,23,24: Open
6. Pins 15,16,21,22: Clutch relay
7. Pins 13,14,19,20: Start relay

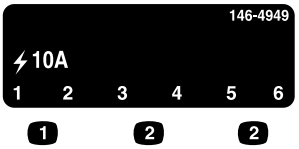

decal146-4949

146-4949

1. Pins 1,2: 48V Main fuse, 10A
2. Pins 3,4: Open
3. Pins 5,6: Open

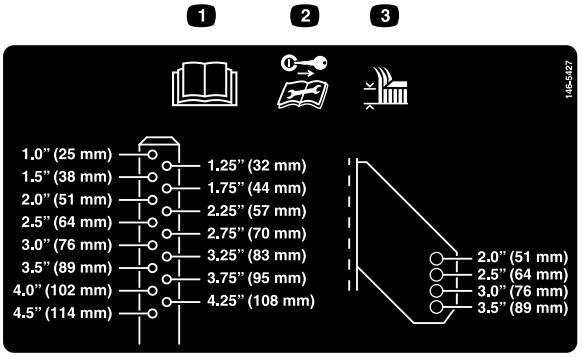

decal146-5427

146-5427

1. Read the Operator's manual
2. Remove the ignition key and read the instructions before servicing or performing maintenance.
3. Height of cut

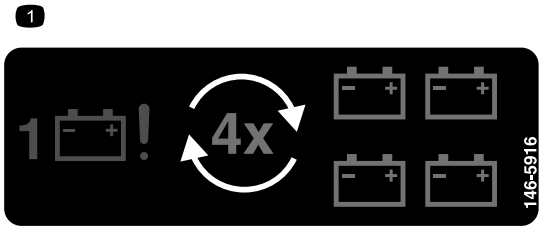

decal146-5916

146-5916

1. One battery failure — replace all four batteries.

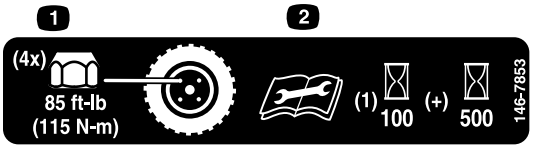

decal146-7853

146-7853

1. Wheel lug nut torque 85 ft-lb (115 N-m) (4x)
2. Read and understand the Operator's manual before performing any maintenance, check torque after first 100 hours then every 500 hours thereafter.



decal147-0290

147-0290

1. Warning—light is bright; do not look directly into the light.

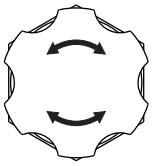

decalemergencystopbtn

Emergency Stop (E-Stop)



decalptoengage

PTO Symbol

1. PTO-engage

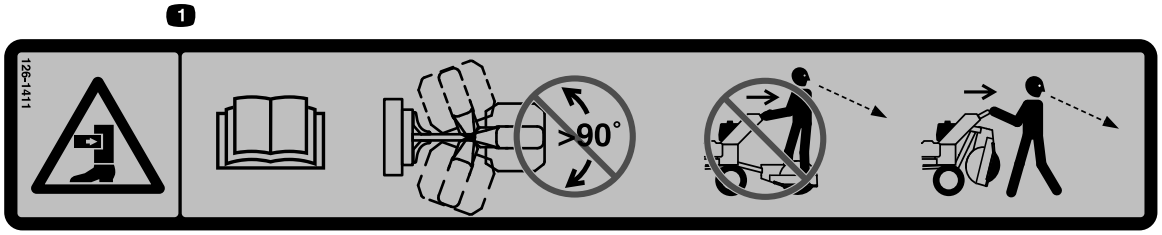

decal126-1411

126-1411

1. Crushing hazard of sulky — read the Operator's manual; Do Not allow sulky to rotate beyond 90 degrees; dismount sulky and place in transport position, if available, before operating in reverse.

Specifications

Systems

Engine

- Engine Specifications: See your Engine Owner's Manual
- Engine Oil Type: Exmark 4–Cycle Premium Engine Oil
- RPM: Full Speed: 3750 (No Load)

  Idle: 1800 RPM

Fuel System

- Capacity: 5.0 gal. (18.9 L)
- Fuel Recommendations:
  - For best results, use only clean, fresh, unleaded gasoline with an octane rating of 87 or higher ((R+M)/2 rating method).
  - Oxygenated fuel with up to 10% ethanol or 15% MTBE by volume is acceptable.
  - **Do Not** use ethanol blends of gasoline (such as E15 or E85) with more than 10% ethanol by volume. Performance problems and/or engine damage may result which may not be covered under warranty.
  - **Do Not** use gasoline containing methanol.
  - **Do Not** store fuel either in the fuel tank or fuel containers over the winter unless a fuel stabilizer is used.
  - **Do Not** add oil to gasoline.
- Fuel Filter: Replaceable In-line
- Fuel Shut-Off Valve: 1/4 turn

Electrical System

- 12V System:
  - Charging System: Flywheel Alternator
  - Charging Capacity: 20 amps
  - Battery Type: 12V Non Spillable, AGM, Maintenance Free Battery
    - ◊ P/N 142-7345
    - ◊ Recommended 310 CCA minimum
  - Battery Quantity: 1
  - Fuses: 20 amp two blade type for charging system and electric clutch circuit
- 48V System
  - Charging System: Belt driven generator
  - Charging Capacity: 50 amps
  - Battery Type: 12V Non Spillable, AGM, Maintenance Free Battery
    - ◊ P/N 142-7345
    - ◊ Recommended 310 CCA minimum
  - Battery Quantity: 4

    ◊ Recommended to replace as a set of four, identical brand and rating
  - Fuses: 15 amp two blade style for machine controls; 30 amp MIDI style for charging system; 150 amp Mega style for battery supply; 10 amp two blade style for logic power

Safety Interlock System

- Indicators appear for the park brake and operator presence on the message display screen on the front control panel.
- E-Stop must be disengaged and motion control levers in neutral/park to start machine.
- Mower blades will stop if the right and left side motion control lever are moved or released into the part brake position.

Operator Controls

Steering Control: Fingertip drive control levers provide independent speed control, braking and neutral to each drive wheel for moving forward or reverse, stopping, and power turning.

Transmission

- Speeds:
  - Manual Mode:
    - ◊ 0-6.8 mph (10.9 km/hr) forward
    - ◊ 0–2.2 mph (3.6 km/hr) reverse
  - Autonomous Mode:
    - ◊ 0-6.2 mph (9.9 km/hr) forward
    - ◊ 0 mph (0 km/hr) reverse
- Disengaging the drive wheel motor hubs allows the machine to be moved when engine is not running.
- Transmission Fluid Type: Exmark Synthetic Electric Motor Drive Oil

  Part No. 146-1159
- Transmission Fluid Capacity: 5 fl. oz. (150 mL)

Tires & Wheels

	Drive	**Front Caster**	**"N0" Tire ***
	Pneumatic (Air-Filled)	Semi-Pneumatic	Semi-Pneumatic
Quantity	2	2	1
Tread	Grass Master	Smooth	Smooth
Size	18 x 8.50-10	11 x 4.00-5	11 x 4.00-5
Ply Rating	4		
Pressure	14 psi (96 kPa)		

*For operator's over 250 lb (113 kg), it is recommended to use pneumatic tire assembly P/N 103-3798.

Cutting Deck

- Cutting Width: 60 inch (152.4 cm)
- Discharge: Permanently installed mulch kit
- Blade Size: (3 ea.): 20.50 inches (52.1 cm)
- Blade Spindles: Solid steel spindles with 1 inch (25.4 mm) I.D. bearings.
- Deck Drive:
  - Electric clutch mounted on engine shaft.
  - Blades driven by belt (w/self-tensioning idlers).
- Deck:

  Full floating deck is attached to out-front support frame, removable for service. Anti-scalp rollers provide maximum turf protection.
- Deck Depth: 5.5 inches (14.0 cm)
- Cutting Height Adjustment:

  Adjusts from 1 inch (2.5 cm) to 4 1/2 inches (11.4 cm) in 1/4 inch (.6 cm) increments.

Dimensions

Overall Width:

61.5 inches (156.2 cm)

Overall Length:

105.5 inches (268.0 cm)

Overall Height:

44.5 inches (113.0 cm)

Tread Width: (Outside to Outside of Tires, Widthwise)

46.4 inches (117.9 cm)

Wheel Base: (Center of Caster Tire to Center of Drive Tire)

43.3 inches (110.0 cm)

Curb Weight:

1134 lb (514 kg)

Torque Requirements

Bolt Location	Torque
Cutter Housing Spindle Nut	140–145 ft-lb (190–197 N-m)
Blade Mounting Bolt (lubricate with anti-seize)	55-60 ft-lb (75-81 N-m)
Engine Deck/Mower Deck Support Mount Bolts	30-35 ft-lb (41-47 N-m)
Anti-Scalp Roller Nyloc Nut (See Figure 20)	50-55 ft-lb (68-75 N-m)
Engine Mounting Bolts	27-33 ft-lb (37-45 N-m)
Wheel Lug Nuts	80-90 ft-lb (108-122 N-m)
Clutch Retaining Bolt (secured with threadlocker)	49-61 ft-lb (66-83 N-m)
Wheel Motor Mounting Bolts	30-35 ft-lb (41-47 N-m)
Radar Plug and Cables	4.78-5.84 in-lb (.54-.66 N-m)
Generator Bolt	27-33 ft-lb (37-45 N-m)

Product Overview

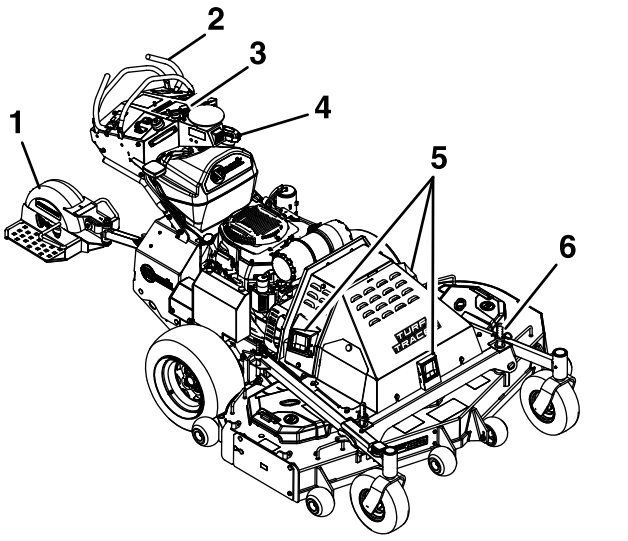

Figure 3

1. StandOn
2. Motion controls/Park brake
3. Controls
4. Fuel Cap
5. Obstacle Detection Sensors
6. Height-of-Cut Pins

Operation

Note: Determine the left and right sides of the machine from the normal operating position.

Controls

Become familiar with all the controls before starting the engine and operating the machine.

Motion Control Levers

The motion control levers, located on each side of the control tower, allow the forward and reverse motion of the machine.

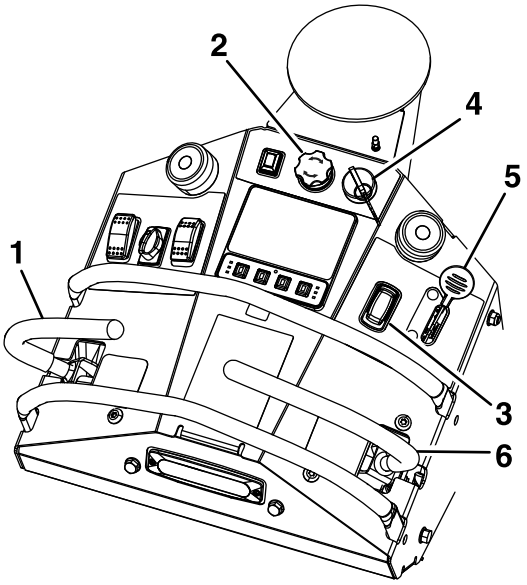

g518121

Figure 4

1. LH Motion control lever
2. Emergency stop push button (E-Stop)
3. PTO engagement switch
4. Ignition switch
5. Throttle
6. RH Motion control lever

Moving the levers forward or backward turns the wheel on the same side forward or reverse respectively. Wheel speed is proportional to the amount the lever is moved.

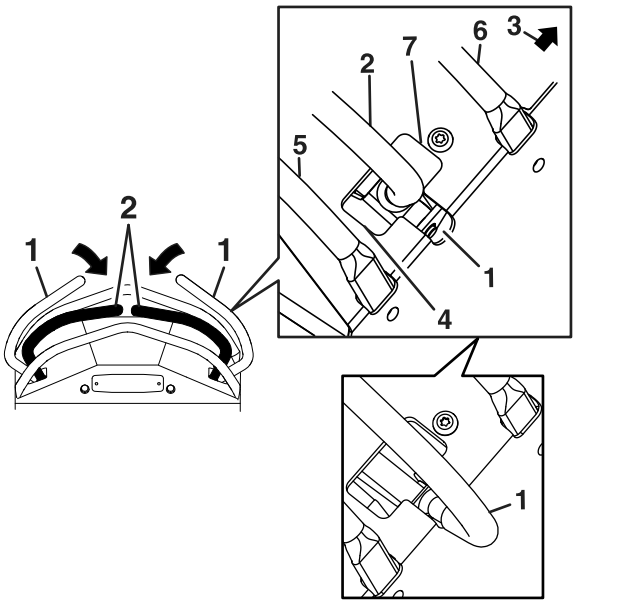

g471543

Figure 5

1. Park brake position
2. Neutral position
3. Front of machine
4. Reverse
5. Rear reference bar
6. Front reference
7. Forward

Note: When the motion control levers are in the park position, an indicator displays on the message display.

Throttle Control

Located on the right side of the front right control panel.

The throttle is used to control engine speed. Moving the throttle control forward will increase engine speed and moving it to the rear will decrease engine speed. Moving the throttle forward into the detent is high idle position.

Park Brake

Moving the motion control levers outward from the neutral position into the T-slot, engages the electric park brake on the drive motors.

Moving the motion control levers inward from the T-slot disengages the brake.

When parking on a steep slope, the wheels must be chocked or blocked in addition to the brake being engaged. The machine must be tied down and brake engaged when transporting.

Ignition Switch

Located on right side of the top control panel.

The ignition switch is used to start and stop the engine. The switch has three positions “OFF”, “ON” and “START”. Insert key into switch and rotate clockwise to the “ON” position. Rotate clockwise to the next position to engage the starter (key must be held against spring pressure in this position). Allow the key to return to the “ON” position immediately after the engine starts.

Fuel Shut-Off Valve

Located in the fuel line midway between the tank and engine.

The fuel shut-off valve is used to shut off the flow of fuel when parking inside a building, during transportation to and from the job sites, and when the machine will not be used for a few days.

Rotate valve 1/4 turn clockwise to shut fuel off. Rotate valve 1/4 turn counterclockwise to turn fuel on.

Drive Wheel Motor Release

Located in the center of each drive wheel motor hub.

If the machine has to be pushed by hand, remove and retain the outer cap from the motor. Insert a ratchet with a 3/8 inch drive into the square hole in the motor hub.

To release the drive system, rotate the hub counterclockwise until it stops (approximately four full rotations) to disengage the transmission. Torque to 30-50 ft-lb (41-68 N-m). Repeat this on each side of the machine.

The machine is now able to be pushed by hand.

Important: Do not move the machine faster than 5 mph (8 km/h).

To reset the drive system, rotate the hub clockwise until it stops (approximately four full rotations) to engage the transmission. Torque to 30-50 ft-lb (41-68 N-m). Repeat this on each side of the machine. Replace the outer caps.

Do Not tow machine.

PTO Engagement Switch

Located on the front right control panel (see Figure 4).

Pushing down on the front of the switch will put the PTO in the “ON” (engage) position. Pushing down on the back of the switch will put the PTO in the “OFF” (disengage) position.

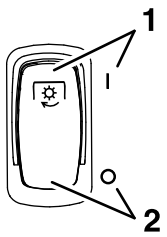

g391899

Figure 6

1. “ON” (engage)
2. “OFF” (disengage)

Emergency Stop Push Button (E-Stop)

⚠ CAUTION

Avoid approaching the machine while in autonomous operation.

Use the mobile device to remotely stop the machine as the best practice. Always approach the machine from the rear.

The emergency stop push button (red button) is located in the center of the top control panel (see Figure 4).

Pushing this button down causes the machine to shutdown quickly in the event of an emergency. The status indicator lights will flash red (reference Figure 7).

To restart the machine, disengage the emergency stop by rotating the button either clockwise or counter-clockwise until it resets to the normal operating position. Press the fault clear button to turn off the red indictor lights and clear the message from the display screen.

Manual/Auto Mode Switch

Located in the center of the front left control panel.

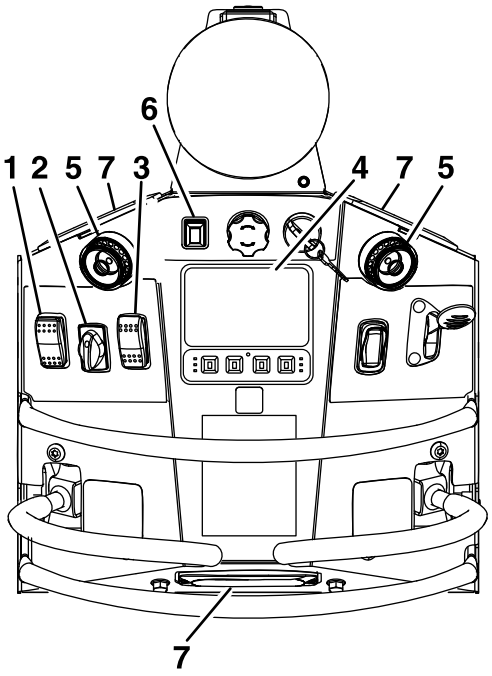

g518132

Figure 7

1. Auto Start switch
2. Manual/Auto Mode switch
3. Record Mode switch
4. Message display
5. Status indicator lights
6. Fault clear button
7. Autonomous operation light (amber color)

The switch can be placed in either Manual or Auto Mode (Autonomous Operation).

- Rotating the switch to the right, places the machine in Manual Mode. In this mode:
  - the Operator can operate the machine to mow.
  - autonomous operations are not permitted.
  - the Record Mode switch can be used to program the operating area boundary and exclusion area(s).
- Rotating the switch to the left, places the machine in Auto Mode (Autonomous Operation). In this mode:
  - the machine is capable of autonomous operations.
  - the machine cannot be operated manually.

Record Mode Switch

Located on the front left control panel on the right side.

The record mode is used to record the boundary and exclusion area(s).

- Push down on the front of the switch when ready to start a boundary recording.
- Push down on the back of the switch when ready to start an exclusion area recording.

This switch can only be used when the machine is in Manual Mode.

Auto Start Switch

Located on the front left control panel on the left side.

When the Manual/Auto Mode Switch has been placed in the Auto mode, pressing down on the front of the Auto Start switch allows the machine to begin autonomous operation.

Fault Clear Button

Located on the left side of the top control panel.

Press this button to clear the Manual or Auto Mode Faults. Once this fault condition has been resolved, pressing this button will cause the red indicator lights to turn off.

Main Power Disconnect Switch

Located on the right side of the machine under the hood access panel.

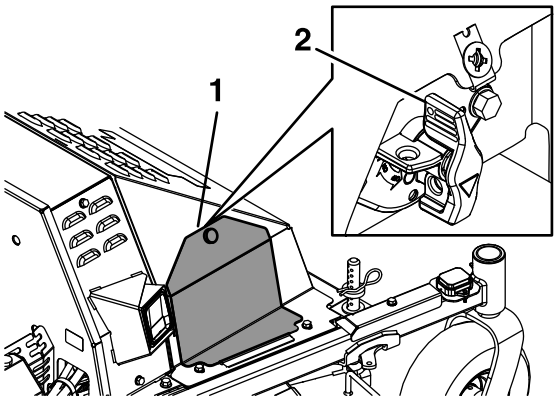

g518147

Figure 8

1. Hood access panel
2. Main power disconnect switch

Turn the switch to the OFF position (counter-clockwise) to de-energize the machine electrically.

Turn the switch to the ON position (clockwise) to energize the machine electrically.

Sensors

Obstacle Detection Sensors

Located near the center, front, and sides of hood on the machine.

The obstacle detection sensors are used to detect objects near the machine during autonomous operations.

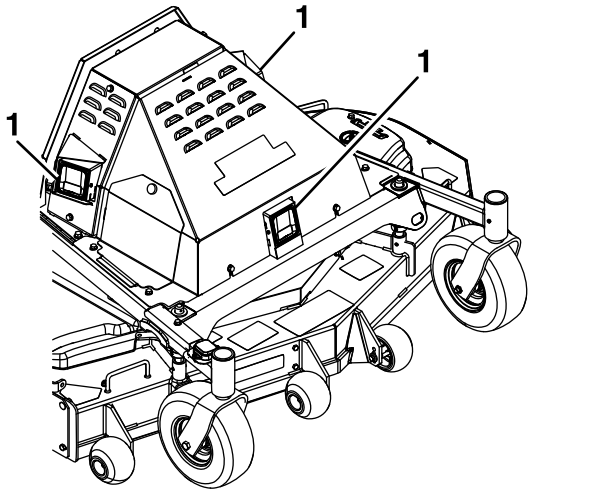

Figure 9

1. Front and side sensor

Important: While the radar sensors are intended to detect human bystanders and many obstacles within the operating area that have not been previously recorded as exclusion areas, operators should not rely solely on the obstacle detection sensors to detect foreign objects in the operating area. Before deploying the machine, the supervisor should ensure the site has been inspected and meets the requirements per the Autonomous Operating Area Criteria (page 33) section.

The supervisor will need to create a new recording session if an exclusion area needs to be added after a recording session has been finished.

StandOn Detection Sensor

Located behind the rear cover on the right side of the engine deck.

Senses when the plunger on the StandOn is in contact with the engine deck for the up or down position.

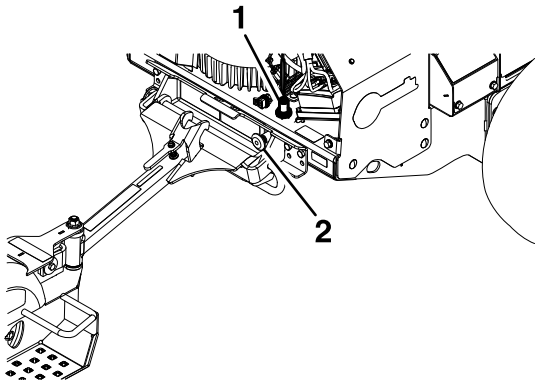

Figure 10
Rear cover removed for clarity

1. Sensor
2. Plunger

Wheel Speed Sensor

Located behind each drive wheel, mounted in the mounting flange of the drive motors.

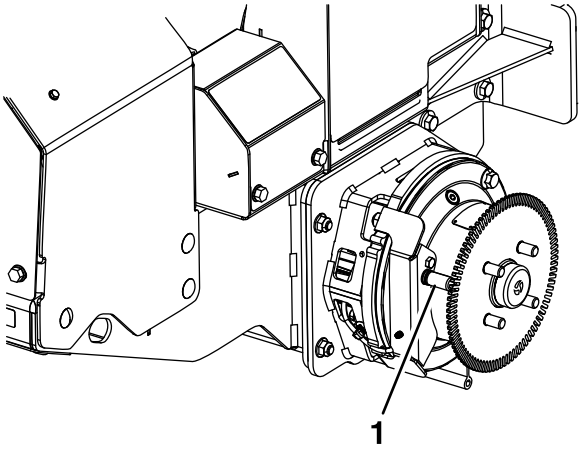

Figure 11

1. Wheel speed sensor

The wheel speed sensor is use to determine if the wheels are turning and how fast.

Blade Sensor

Located on the cutting deck over the stationary idler sheave.

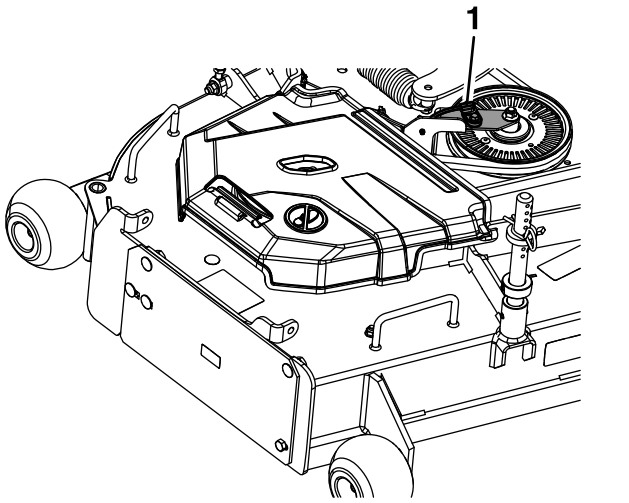

Figure 12

1. Blade sensor

The blade sensor is used to determine if the blades are engaged.

Alerts and Alarms

Use the charts below for status indicator and warning light explanations.

Status Indicator Lights

Located on the control panel.

Light Color	Light State	Indicates
Red	Solid	A fault or advisory has been triggered.
Red	Turns off	The fault or advisory has been cleared.
Blue	Solid	Recording is in process.
Blue	Turns off	Recording process has been canceled or completed.
Green	Solid	Machine working in autonomous operation.
White (LED on mode select switch)	Solid	Autonomous mode selected.

Autonomous Operation Warning Lights

Located on the left and right panels above the fuel tank and on the rear of the control tower.

Light Color	Light State	Indicates
Amber	Blinking–continuous slow	Machine working in autonomous operation.
Amber	Blinking–continuous fast	Obstacle detected
Amber	Turns off	Machine not working in autonomous operation.

Note: If the Amber LEDs are not flashing in sync, configure them by navigating to the "Configure Amber LEDs" in the Menu settings of the **Message Display** (page 30). (Menu→Settings→Configure Amber LEDs→√ (check mark))

Audible Alarm

An audible alarm will sound:

- for two seconds before the machine begins forward movement in Auto Mode.
- for two seconds before the blades engage in Auto Mode.
- until the blades quit rotating after being disengaged while in Auto Mode.

Message Display

The Message Display is located in the center of the front control panel.

The information screen displays icons and information relative to machine operation and is backlit for viewing in low light situations. The information screen is located above the push buttons.

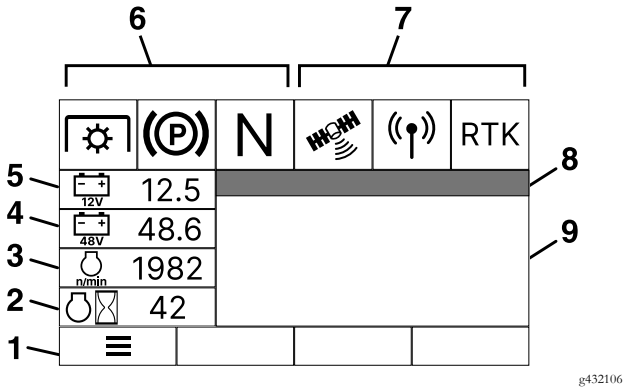

Figure 13

1. Menu
2. Engine hours
3. Engine speed
4. 48V System voltage
5. 12V System voltage
6. Safety circuit status
7. Signal status
8. Machine status
9. Message display

Safety Circuit Status Icons

Icon	ON	OFF
Park brake		
Operator presence	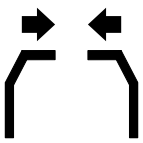	
PTO	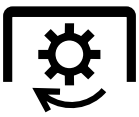	

Signal Status Icons

Icon	Signal	No Signal (shaded red)
GPS (Global Positioning System)		
Cellular		
RTK (Real-Time Kinematics)	RTK	RTK

XiQ Mobile App

A mobile app is available for both iOS and Android. Access to the mobile app is required to begin autonomous operations each time a path is loaded to the machine. The supervisor is enabled to remotely stop the machine using the mobile app. The app can also be used to view the current path that the machine is mowing as well as other information about the machine.

App Install

Download the app "XiQ" from the iOS App Store or the Google Play Store.

Login

Log into the app using the credentials that were provided during the registration process.

Before Operation

Important: Review the safety messages and safe operating practices in Safety (page 9) before operating the machine.

Daily Operation Checklist

Read the information below to ensure the machine is ready to operate reliably. Correct any issues before resuming operation.

- Read, understand, and follow all instructions and warnings in this guide and on the machine, engine, and attachments.
- Check that the following items are in place and in proper working condition: the operator presence controls, safety switches, guards, and shields. Do not operate the machine unless they are in proper working condition. Replace worn or deteriorated parts with genuine Exmark parts when necessary.

  ⚠ DANGER

  It is essential that operator safety mechanisms be connected and in proper operating condition prior to use. Contacting the blade will result in serious personal injury.

  Shut off the engine, remove the key, and wait for all moving parts to stop before leaving the operating position. When the key is turned to the "OFF" position, the engine should shut off and the blade should stop. If not, stop using the machine immediately and contact an Authorized Service Dealer.

- If present, ensure the StandOn drawbar assembly is securely connected to the mount plate.
- Check for dirt/mud buildup between tire and fender on the StandOn. Remove buildup before operating.

  Note: You can wash the StandOn with mild detergent and water. Do not pressure wash the machine.

- All the obstacle detection sensors are securely mounted on the machine, functioning properly, clean of debris, and are positioned in the proper direction.
- The mobile device is charged and functioning properly.
- All audible and visual warnings on the machine are functioning properly.
- Confirm that all warnings and operating conditions in the Operator's manual have been reviewed and understood.

Supervisor Information

Supervisor for Deployment and Operation of Machine

The supervisor is responsible for inspecting the machine(s) prior to use to ensure that it is ready to operate reliably. Inspections include but are not limited to the following:

- Verify that the sensors are functioning properly, clean of dust and debris, and pointed in the proper direction prior to daily deployment.
- Perform normal daily operation checklist(s) as required for the machine(s) prior to daily deployment.
- Perform any additional maintenance or readiness checks as detailed in the training or instructions provided by the machine(s).
- Carry the mobile device at all times for remotely stopping the machine.
- The supervisor is responsible for ensuring that all exclusion areas have been recorded prior to autonomous operation. The operating areas must follow the requirements in **Autonomous Operating Area Criteria** (page 33)
- The supervisor is responsible for initiating autonomous operation of the machine(s) from a staging area within the autonomous operating area. The machine must be transported to that staging area and back to the storage area in manual mode by a qualified operator.
- Prior to and during machine operation, the supervisor is responsible for inspecting the operating areas (including but not limited to the autonomous operation area); the contiguous mowing area; and the transit paths to identify and remove hazards including but not limited to the following:
  - Items in the operating area such as sticks, rocks, debris, raised sprinklers, tools, lawn

furniture, sporting goods, toys, and any other objects not meant to be cut by blades or otherwise mowed
  - Bystanders and children
  - Unmowable areas such as areas under repair, standing water, damaged turf, etc.
- A qualified manual operator may need to mow with the machine in manual mode if operating that machine autonomously is restricted by, but not limited to, the following:
  - Inadequate wireless signal (i.e., cellular, GNSS connectivity, etc.)
  - Restriction of operating area for the machine(s) based on and identified by the site assessment
  - Area too close to a boundary or immovable obstacles

Autonomous Operating Area Criteria

Autonomous Job Site Assessment

For optimal performance, the operating area should consist of large areas (quarter of an acre or larger) of turf with few obstacles.

- Before each use make sure the operating area is free from all debris that could interfere with the operation of the machine or that the machine could throw:
  - Standing water, tree limbs, non-turf objects, holes, or washouts, etc. have been either repaired or removed.
  - All irrigation heads are completely retracted to the ground.
  - All expected obstacles have been removed from the autonomous operating area, for example, temporary obstacles such as tools, lawn furniture, sporting goods and toys.
- Regularly inspect the operating area for new hazards and address them before operating the machine.
- Ensure the operating area does not include slopes greater than 5 degrees.
- Ensure the operating area does not include sharp drop-offs.
- Ensure the operating area is not in areas where bystanders, co-workers, or moving vehicles and/or planes are expected. Ensure no public roads or walking/bicycle paths cross through the operating area.
- The supervisor is responsible for ensuring that all exclusion areas have been recorded prior to autonomous operation. For recording instructions, refer to the **Starting a Recording Session** (page 38).

Initial Autonomous Site Assessment

The first time the machine is brought to a job site, verify:

- the site meets the **Autonomous Job Site Assessment** (page 33).
- the availability of the cellular, GNSS, and RTK signal.
- the sensors for the object detection system are functioning properly.

Recurrent Autonomous Site Assessment

Each time the machine is brought to a job site, verify:

- the site meets the **Autonomous Job Site Assessment** (page 33).
- the availability of the cellular, GNSS, and RTK signals meets the **Autonomous Job Site Assessment** (page 33).
- the sensors for the object detection system are functioning properly.
- removal of new temporary obstacles such as tools, lawn furniture, sporting goods and toys left in the operating area since the operating area was previously mowed.
- no new permanent objects need to be excluded (i.e., newly planted trees, new landscaping, new physical structures).
- The supervisor is responsible for ensuring that all exclusion areas have been recorded prior to autonomous operation. For recording instructions, refer to the **Starting a Recording Session** (page 38).

  Important: The supervisor will need to create a new recording session if an exclusion

area needs to be added after a recording session has been finished.

During Operation

Operating Instructions

Important: Review the safety messages and safe operating practices inSafety (page 9) before operating the machine.

Important: It is essential that operator safety mechanisms be connected and in proper operating condition prior to use. Refer to the Safety Interlock System (page 22).

Open the Fuel Shut-Off Valve

Rotate the valve 1/4 turn counterclockwise to turn fuel on.

Starting the Engine

1. Place the motion control levers outward in the T-Slots into the park brake position.
2. Push down on the back of the PTO switch to the "OFF" (disengage) position.
3. Place the throttle midway between the "SLOW" and "FAST" positions.
4. Turn ignition switch to the "START" position. Release the switch as soon as the engine starts.

   Important: Do Not crank the engine continuously for more than ten seconds at a time. If the engine does not start, allow a 60 second cool-down period between starting attempts. Failure to follow these guidelines can burn out the starter motor.

Engaging the PTO

⚠ DANGER

The rotating blades under the mower deck are dangerous. Blade contact can cause serious injury or death.

Do Not put hands or feet under the mower or mower deck when the blades are engaged.

The PTO switch engages the cutting blades. Be sure that all persons are clear of the mower deck before engaging PTO.

After moving a drive lever inward to the drive position, push down on the front of the PTO switch to engage the blades.

Disengaging the PTO

Push down on the back of the PTO switch to disengage the blades

Stopping the Engine

1. Disengage the PTO.
2. Bring the machine to a full stop.
3. Place the motion control levers outward in the T-Slots into the park brake position.
4. Place the throttle midway between the "SLOW" and "FAST" positions.
5. Allow the engine to run for a minimum of 15 seconds, then turn the ignition switch to the "OFF" position to stop the engine.
6. Remove the key to prevent children or other unauthorized persons from starting engine.
7. Close the fuel shut-off valve and turn the main disconnect switch to "OFF" position when the machine will not be in use for a few days, when transporting, or when the machine is parked inside a building.

Driving the Machine

⚠ DANGER

If the StandOn rotates beyond 90°, there is a potential crushing hazard. Rapid rotation beyond 90° can cause the StandOn to jackknife into the mower engine deck and cause serious injury.

- **Dismount the StandOn and place in transport position before operating in reverse.**
- **Reduce speed when making sharp turns and operating on slopes.**

⚠ CAUTION

Machine can spin very rapidly by positioning one lever too much ahead of the other. Operator may lose control of the machine, which may cause damage to the machine or injury.

- **Use caution when making turns.**
- **Slow the machine down before making sharp turns.**

Driving Forward

1. If installed, step onto the StandOn or place it in the stowed (transport) position.
2. Move the motion control levers inward (together) to the neutral position.
3. To move forward in a straight line, move both levers forward with equal pressure.

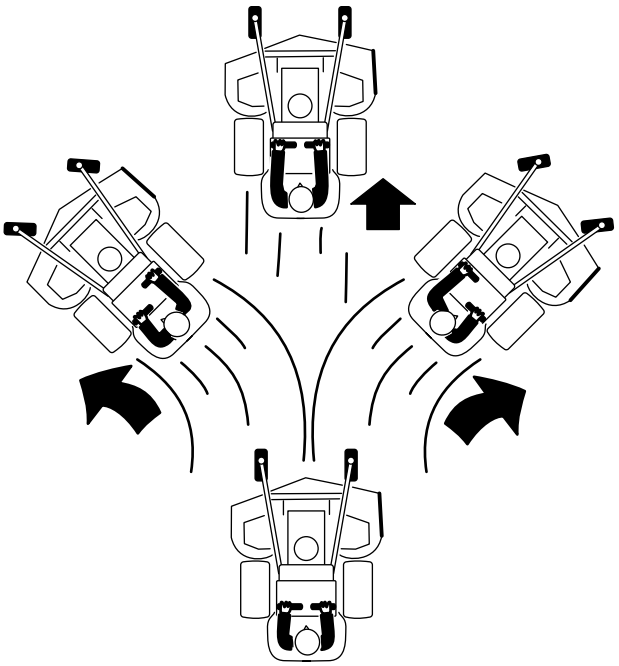

g520703

Figure 14

To turn left or right, pull the motion control lever back toward neutral in the desired turn direction.

- Use care when turning to ensure that you Do Not swing yourself and the StandOn into obstacles.
- When turning, lean forward and toward the direction of the turn to help in keeping balance.

The machine will move faster the farther the motion control levers are moved from the neutral position.

4. To stop, position both motion control levers in the neutral position.

Driving in Reverse

1. Move the motion control levers to the neutral position.
2. If installed, step off the StandOn and place it in the stowed (transport) position.
3. To move rearward in a straight line, slowly move both front levers rearward with equal pressure.

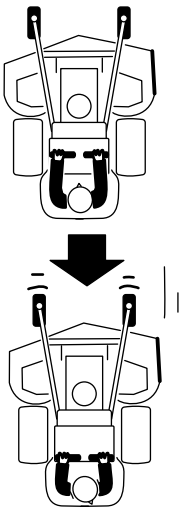

g520704

Figure 15

To turn left or right, release pressure on the motion control lever toward the desired turn direction.

4. To stop, position both motion control levers in the neutral position.

Adjusting the Cutting Height

⚠ WARNING

When the two front support rod hairpins are removed from the mower deck, the weight of the tractor section may cause the front frame of the machine to rise suddenly. If the machine rises suddenly, injury may occur.

Securely hold down the front of the machine when raising the mower deck for hairpin repositioning.

The cutting height of the mower deck is adjusted from 1 to 4 1/2 inches (2.54 cm to 11.4 cm) in 1/4 inch increments.

1. Disengage the PTO.
2. Bring the machine to a full stop.
3. Move the motion control levers out into the T-slots to engage the park brake.
4. Stop the engine, remove the key and wait for all moving parts to stop.
5. Lift the cutting deck using the handle as shown in Figure 16 (handle position varies with deck size) to the highest position possible. Engage deck height change assist lever by shifting forward until contact with the deck support rod is felt (see Figure 17). While the lever is manually engaged, lower the deck to rest on the lever.

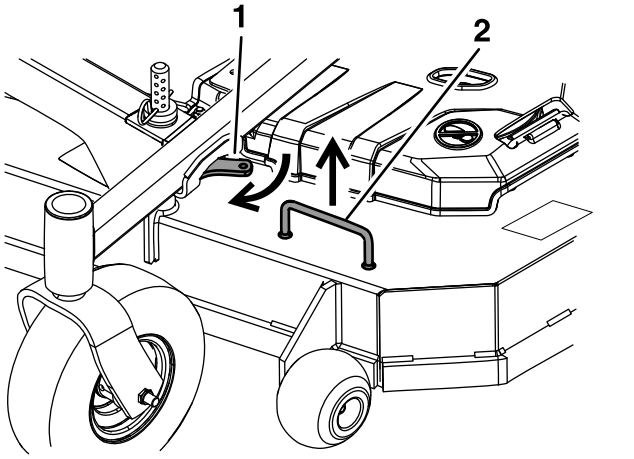

Figure 16

1. Deck height change assist lever
2. Deck handle

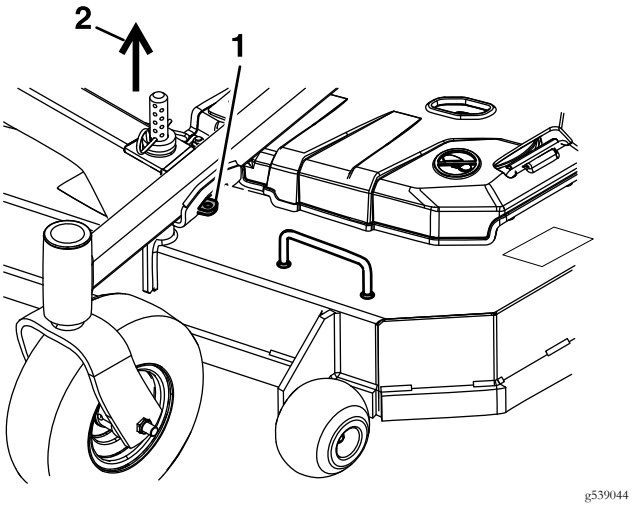

Figure 17

1. Deck height change assist lever-engaged
2. Deck raised

6. On lifted deck side, install hairpin clips in the holes for the desired cutting height (see Figure 18).

Important: To maintain correct cutting height and rake, check the following for proper adjustment.

A. The front and rear hairpins are in the same holes with the proper spacers under the hair pins (see Figure 18).

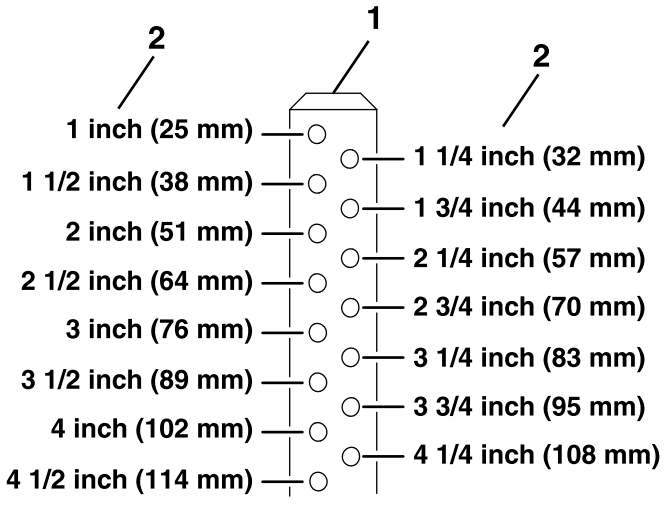

Figure 18

1. Deck support pin
2. Cutting Height

B. The tire pressures are set as directed in **Check Tire Pressures** in the Maintenance section.

C. The length of the rear deck support link assemblies average 7.76 inches (approximately

7 3/4 inches) (197 mm) from the center of the balljoint to the center of the farthest hole (see Figure 19).

Note: All four pins must equally support the weight of the deck. Adjustment in the length of the rear deck support assemblies may be necessary. Check lifted side rear support to meet average length as stated in step C. When lifted opposing rear support is checked, adjust to same length as previous rear support. After lowering deck (de-latching) check that all four support pin rings are loaded. Adjust either rear pin assembly side as needed.

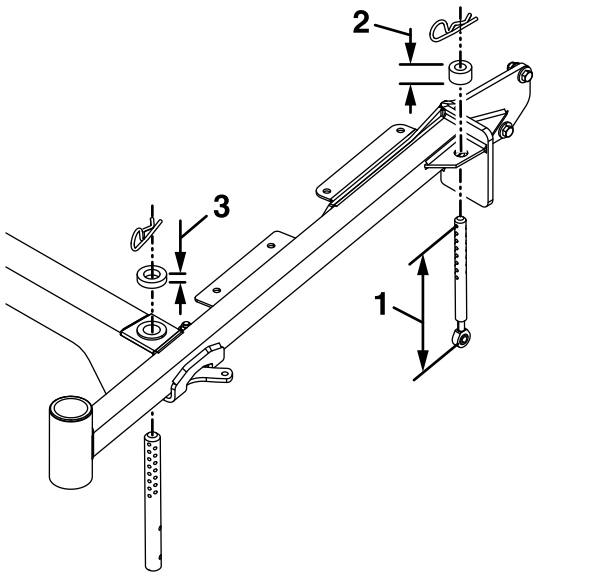

Figure 19
Left Hand Side Shown

1. 7 3/4 inches (197 mm)
2. 3/4 inch (19 mm)
3. 3/8 inch (9.5 mm)

7. Repeat steps 5 and 6 for opposite side.
8. Lift deck to de-latch and lower until the pin makes contact with the thrust washer.

Note: Deck height change assist levers are not intended to be used during transport or as cut height positions. During operation, vibration and jerky movements will lift the cutting deck enough to allow spring return disengagement of levers. This will result in sudden drop of the cutting deck, causing possible damage. Levers are also not intended to be used as tie-down locations during transport.

Adjusting the Anti-Scalp Rollers

It is recommended to change the anti-scalp roller position when the height of cut has changed.

1. Disengage the PTO.
2. Bring the machine to a full stop.
3. Move the motion control levers out into the T-slots to engage the park brake.
4. Stop the engine, remove the key and wait for all moving parts to stop.
5. After adjusting the height of cut, adjust the anti-scalp rollers by removing the nyloc nut, spring disc washer, and bolt.
6. Adjust anti-scalp rollers for Normal Operating Conditions. Place rollers in one of the positions shown in Figure 20. Rollers will maintain 3/4 inches (19 mm) clearance to the ground to minimize gouging and roller wear or damage.

Note: **For Maximum Deck Flotation**, place rollers one hole position lower. Rollers should maintain 1/4 inch (6.35 mm) clearance to ground. Do Not adjust rollers to support the deck.

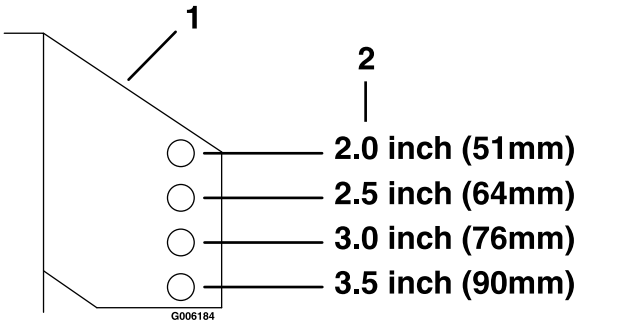

Figure 20
For cutting heights above 3.5 inches (90 mm) use the bottom hole. The rollers will still be effective against scalping.

1. Anti-scalp roller mounting bracket
2. Cutting height

7. Be sure roller bolts are installed with the spring disc washer between head of the bolt and mounting bracket.
8. Torque the 3/8-16 nyloc nut to 50–55 ft-lb (68-75 N-m) (Figure 21).

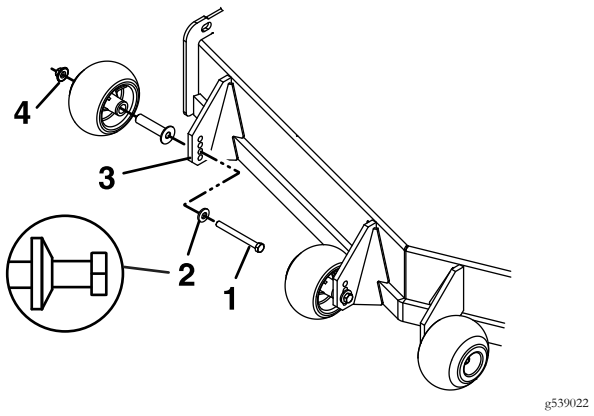

Figure 21

1. 3/8-16 x 3 3/4 Grade 8 bolt
2. Spring disc washer (cone towards bolt)
3. Front right anti-scalp bracket shown
4. 3/8 nyloc-torque to 50–55 ft-lb (68-75 N-m)

Operating Area– Autonomous Operation

If there is not a previously recorded operating area one will have to be recorded before autonomous operations can be started.

Important: The locations must meet Autonomous Operating Area Criteria (page 33).

Starting a Recording Session

In order to create an operating area an operator must complete a recording session. Recording can only be accomplished when the machine is in Manual Mode. The first step in the recording session is to record the boundary. The operator must choose whether or not the blades are engaged while recording.

1. With the mode select in the Manual Mode position, determine a start point for the planned boundary and drive the machine to that start point. The machine should be facing the direction the operator plans to begin driving once the boundary recording has been started.
2. To start a boundary recording press down on the front of the Record Mode switch (record boundary position). The status indicator lights will turn solid blue to indicate the boundary recording is in process, and will turn off once the boundary is confirmed or canceled.
3. Follow the instructions on the message display to confirm or cancel the boundary. To be prompted to confirm the boundary, the operator must drive the entire boundary path, returning to the point at which they started the boundary recording.
4. Once a boundary has been successfully recorded, the operator can either continue the recording session by adding exclusion areas or finish the recording session.
5. If adding exclusion areas to the recording session, first determine a start point on the perimeter of the exclusion area and drive the machine to that start point. The machine should be facing the direction the operator plans to begin driving once the exclusion area recording has been started.

   Important: Ensure all permanent objects in the operating area are recorded as exclusion areas to minimize risk of contact with the machine.
6. To start the exclusion area recording press down on the back of the Record Mode switch (record exclusion area position). The status indicator lights will turn solid blue to indicate the exclusion area recording is in process, and will turn off once the exclusion area is confirmed or canceled.
7. Follow the instructions on the message display to confirm or cancel the exclusion area. To be prompted to confirm the exclusion area, the operator must drive the entire exclusion area perimeter, returning to the point at which they started the exclusion area recording
8. Continue adding exclusion areas to the recording session or finish the recording session by following the instructions on the message display.
9. The operating area is automatically stored upon finishing the recording session. Once an operating area is uploaded it is available anytime the mower is within the boundary of the operating area.

Starting Autonomous Operation

Important: A machine supervisor must be within the line of sight at all times while the machine is operating in Auto Mode. The supervisor must be capable of remotely interrupting/stopping autonomous operation of the machine.

Before the machine can start the autonomous operation, the following conditions must be met:

- An operating area must be created.

- The machine must be parked within the operating area.
- The StandOn must be in transport position or removed from the machine.
- The blades must be disengaged.
- The motion control drive levers must be placed in the outward T-slots (park brake/OPC disengaged/operator not present) position.
- The engine must be running and the throttle set to high idle.
- No objects detected by sensors.
- Machine is indicating it has cellular, GNSS, and RTK signals.
- The supervisor must position the mode select switch to "Auto Mode".

  Note: An initial fill path is generated the first time a machine is parked within an operating area and the mode select switch is set to Auto Mode. The fill angle used for the fill path is determined by the direction the machine is facing when Auto Mode is selected.

When all machine conditions are met, the operator is ready to start autonomous operation.

Note: An user acknowledgement must be confirmed in the mobile app each time a path is loaded to the machine.

To confirm the user acknowledgement:

1. Open the mobile app to the Dashboard screen.
2. Select the machine waiting for user acknowledgement confirmation (it will be highlighted in orange).
3. Read the user acknowledgement statement that appears and select "Acknowledge and Confirm" if you are prepared for the machine to begin autonomous operation, otherwise select "Close".

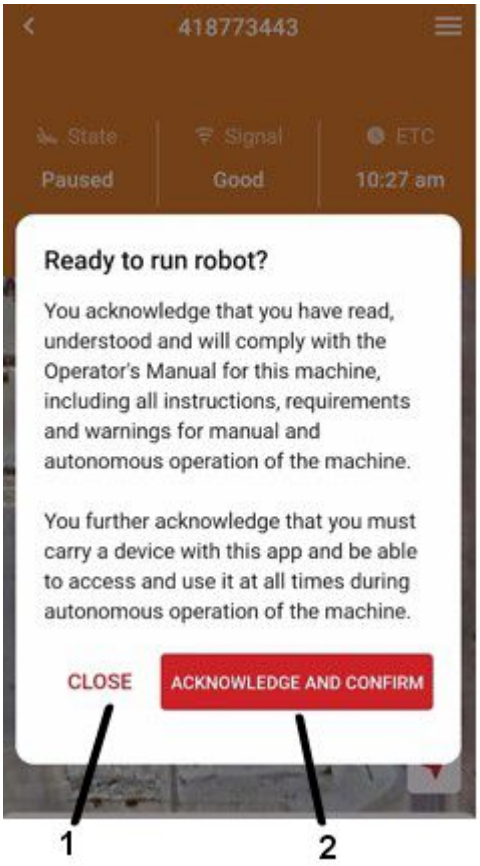

g573735j

Figure 22

1. Close
2. Acknowledge and Confirm

To start the autonomous operation:

1. Press the "Auto Start" switch. Green indicator lights and amber blinking warning lights will turn on, indicating the machine is capable of autonomous operation. The green indicator lights and amber blinking lights will remain on while the machine is capable of autonomous operation.
2. There will be a minimum two second delay before autonomous operation can begin. The audible alarm will sound during this delay. This delay is to allow time for the operator to move away from the machine. Exit the machine towards the rear.
3. Following the delay, the machine will move to the starting location for the operating area.

Important: If the machine contacts an object or becomes immobilized, use the remote stop to ensure the machine has stopped

autonomous operation before approaching or interacting with the machine.

4. Once the machine has moved to the starting location, it will pause for two seconds while the audible alarm sounds. After this two second delay, the blades will turn on and the machine will begin mowing the operating area.

The supervisor can review progress of the autonomous operation by accessing the "XiQ" mobile app.

Upon completion of the entire fill path, the machine will stop and the blades will disengage. The amber blinking lights will turn off and green indicator lights will turn off. A message will appear on the screen to let the operator know the job has been completed.

Interruption of Autonomous Operation

Autonomous operation is interrupted by any of the following:

- If the machine detects an object
  - close to the machine: the machine stops, the engine stops, PTO is disengaged, the amber blinking lights turn off, the indicator lights turn from green to red, and an audible alarm sounds until the blades stop rotating. Operator intervention is required to reset the machine.
  - further from the machine: the machine stops (but engine remains running), PTO is disengaged, the amber lights flash fast, an audible alarm sounds until the blades stop rotating. The machine can return to an autonomous operation if the obstacle clears this zone within 30 seconds. If the obstacle is present after 30 seconds, the engine remains running, the amber blinking lights turn off, and the green indicator lights turn red signaling operator intervention is required.
- If the machine encounters a fault:

  the machine stops, the PTO is disengaged, an audible alarm sounds until the blades stop rotating, the amber blinking lights turn off, and the green indicator lights turn red. Operator intervention is required to reset the machine.
- If the mobile device is used to remotely stop the machine:

  the machine stops, the PTO is disengaged, an audible alarm sounds until the blades stop rotating, the amber blinking lights turn off, and the green indicator lights turn red. Operator intervention is required to reset the machine.

To use the mobile app to remotely stop the machine:

1. Open the mobile app to the Dashboard screen.
2. Select the desired machine to open the machine details screen.
3. Select the  in the lower right hand corner of the screen.



g573756

Figure 23

Advisories, Faults, and Fault Handling

The machine will detect advisories and faults and communicate them to the operator. When an advisory or fault is detected, the operation of the machine is halted, and a message will appear on the message display screen.

- Advisories will alert the operator that something on the machine is limited in capability or function. When an advisory is active a message will display on the message display screen that has amber text and the amber LEDs on the message display screen will flash.
- Faults alert the operator that something is wrong with part of the machine that needs to be addressed. When a fault is active, a message will display on the message display screen that has red text and the red LEDs on the message display screen will flash.

Some advisories and faults will require the operator to interact with the machine. When this happens, the status indicator lights will turn red and the fault clear button will need to be pressed to reset the fault or advisory. If autonomous operations was interrupted, the process outlined in "**Starting Autonomous Operation**" section will have to be repeated in order to resume operating autonomously.

After Operation

Important: Review the safety messages and safe operating practices Safety (page 9) after operating the machine.

Transporting

Transporting the Machine

Use the platform side handles to lift and rotate the StandOn into transport position when loading a machine on a trailer, unloading a machine from a trailer, or operating in reverse.

Important: Do Not use the drawbar to lift the StandOn.

⚠ CAUTION

Fingers may be pinched when lifting and rotating the platform.

Always use platform side handles to lift and rotate the StandOn.

- **Placing into Transport Position:**

1. Using one of the platform side handles, slightly lift the StandOn.

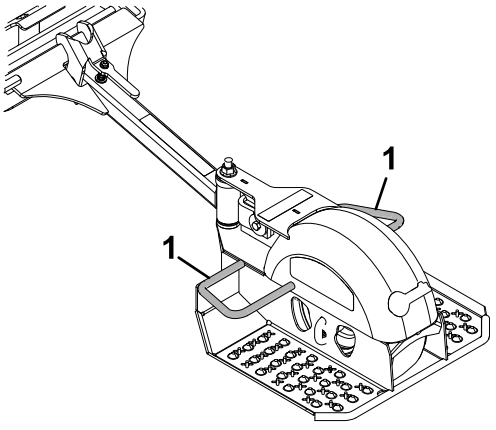

g192304

Figure 24

1. Platform side handles

2. Slowly and carefully rotate the StandOn until it contacts the drawbar (see Figure 25).

   If holding the left platform side handle, rotate the StandOn counterclockwise; using the right platform side handle, rotate it clockwise.

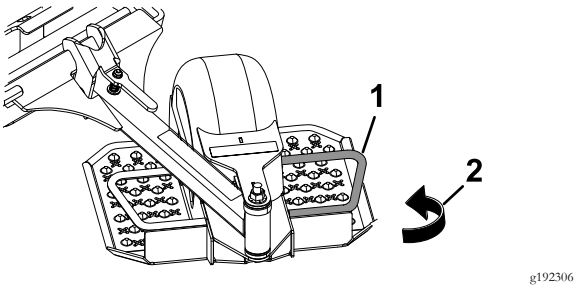

Figure 25

1. Left platform side handle 2. Rotate counterclockwise

3. Slowly and carefully lift the StandOn until the latch locks into place.

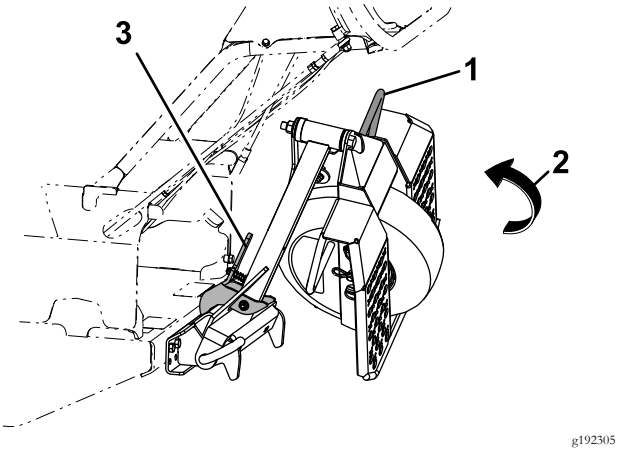

Figure 26

1. Left platform side handle 3. Latch
2. Lift up

- **Lowering the StandOn into Operating Position:**

1. Firmly hold the platform side handle and lift sightly (reference Figure 26).
2. Squeeze the latch to release the StandOn and slowly and carefully lower it to the ground.

⚠ WARNING

Loading the mower onto a trailer without strong enough or properly supported ramps could be dangerous. The ramps could collapse causing the unit to fall, which could cause injury.

- **Use proper ramps that are secured to the truck or trailer.**
- **Keep feet and legs out from under the unit when loading and unloading.**
- **If necessary, use assistance when loading.**

Use a heavy-duty trailer or truck to transport the machine. Ensure that the trailer or truck has all necessary lighting and marking as required by law. Thoroughly read all of the safety instructions. Knowing this information could help you, your family, pets, or bystanders avoid injury.

To transport the machine:

- Use full width ramps when loading the machine.
- Be sure the fuel shut-off valve is closed.
- Engage park brake, then block the wheels. Do Not rely solely on the parking brake to hold the machine on the trailer.
- Securely fasten the machine to the trailer or truck with straps, chains, cable, or ropes. If possible, both front and rear straps should be directed down and outward from the machine.
- Secure a trailer to the towing vehicle with safety chains.

Maintenance

Note: Determine the left and right sides of the machine from the normal operating position.

Maintenance Safety

- Park machine on level ground, disengage drives, set parking brake, stop engine, remove key, and disconnect spark plug wire. Wait for all moving parts to stop before leaving the operator's position. Allow the machine to cool before servicing, adjusting, fueling, cleaning, or storing.
- If you leave the key in the switch, someone could accidently start the engine and seriously injure you or other bystanders. Remove the key from the switch before you perform any maintenance.
- Never allow untrained personnel to service machine.
- Turn the battery disconnect switch to the "OFF" position and disconnect the spark plug wire before making any repairs. Disconnect the negative terminal first and the positive last. Reconnect positive first and negative last.
- Keep all guards, shields, switches, and all safety devices in place and in proper working condition. Frequently check for worn or deteriorating components and replace them with genuine Exmark parts when necessary.

⚠ WARNING

Removal or modification of original equipment, parts and/or accessories may alter the warranty, controllability, and safety of the machine. Unauthorized modifications to the original equipment or failure to use original Exmark parts could lead to serious injury or death. Unauthorized changes to the machine, engine, fuel or venting system, may violate applicable safety standards such as: ANSI, OSHA and NFPA and/or government regulations such as EPA and CARB.

- Use care when checking blades. Wrap the blade(s) or wear gloves, and use caution when servicing them. Only replace damaged blades. Never straighten or weld them.
- Do not rely solely on mechanical or hydraulic jacks for support. Use adequate jack stands.
- Carefully release pressure from components with stored energy
- Keep your hands and feet away from moving parts or hot surfaces. If possible, do not make adjustments with the engine running.
- Keep all parts in good working condition and all hardware tightened, especially the blade-attachment hardware.

Recommended Maintenance Schedule(s)

Maintenance Service Interval	Maintenance Procedure
After the first 5 hours	• Change the engine oil.
After the first 50 hours	• Change the transmission fluid.
Before each use or daily	• Check the engine oil level. • Check the mower blades. • Check the safety interlock system. • Check for loose hardware. • Inspect the StandOn. • Check for dirt/mud buildup between tire and fender. • Clean the grass and debris build-up from the machine and cutting deck. • Clean the engine and exhaust system area. • Clean the grass build-up from under the cutting deck.
Every 40 hours	• Check the tire pressures. • Check the condition of the belts.

Maintenance Service Interval	Maintenance Procedure
Every 50 hours	• Check the spark arrester.
Every 100 hours	• Change the engine oil. (May need more often under severe conditions.)
Every 160 hours	• Check the spark plugs.
Every 250 hours	• Replace the primary air cleaner element — check secondary air cleaner element; replace if dirty. (May need more often under severe conditions. See the Engine manual for additional information.)
Every 500 hours	• Replace the secondary air cleaner element. (May need more often under severe conditions. See the Engine manual for additional information.) • Change the transmission fluid. • Adjust the caster-pivot bearing.
Yearly	• Grease the front caster wheel hubs. • Grease front caster pivots. • Grease the idler pivot (Mower Deck). • Grease the StandOn wheel hub. • Lubricate the caster wheel hubs.

Periodic Maintenance

Engine Maintenance

Important: Refer to the Engine Owner's Manual for additional maintenance procedures.

Engine Safety

⚠ WARNING

The engine can become very hot, especially the muffler and exhaust components. Touching a hot engine can cause severe burns.

Allow the engine to cool completely before service or making repairs around the engine area.

Do Not change the engine governor setting or overspeed the engine.

Check Engine Oil Level

Service Interval: Before each use or daily

1. Stop engine and wait for all moving parts to stop. Make sure the machine is on a level surface.
2. Check with engine cold.
3. Clean area around dipstick. Remove dipstick and wipe oil off. Reinsert the dipstick according to the engine manufacturer's recommendations. Remove the dipstick and read the oil level.
4. If the oil level is low, wipe off the area around the oil fill cap, remove cap and fill to the "FULL" mark on the dipstick. Exmark 4-Cycle Premium Engine Oil is recommended; refer to the Engine Owner's manual for an appropriate API rating and viscosity. **Do Not** overfill.

Important: Do Not operate the engine with the oil level below the "LOW" (or "ADD") mark on the dipstick, or over the "FULL" mark.

Using the Main Power Disconnect Switch

Service Interval: As required

1. Park the machine on a level surface, disengage the PTO, and move the motion control levers outward to engage the parking brake.
2. Shut off the machine, remove the key, and wait for all moving parts to stop before leaving the operating position.
3. Position the battery disconnect switch to electrically de-energize or energize the machine.

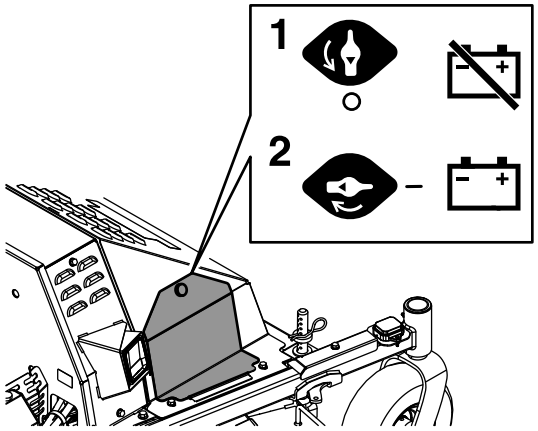

Figure 27

1. Turn the switch to the Off position to de-energize the machine electrically.
2. Turn the switch to the On position to energize the machine electrically.

Check Battery Charge– 12 Volt System and 48 Volt System

Service Interval: As required

Allowing batteries to stand for an extended period of time without recharging them will result in reduced performance and service life. To preserve optimum battery performance and life, recharge batteries in storage when the open circuit voltage drops to 12.1 volts.

Note: To prevent damage due to freezing, batteries should be fully charged before putting away for winter storage.

Charge batteries in an open well ventilated area, away from spark and flames. Unplug charger before connecting or disconnecting from battery. Wear protective clothing and use insulated tools.

⚠ DANGER

Charging or jump starting the battery may produce explosive gases. Battery gases can explode causing serious injury.

- **Keep sparks, flames, or cigarettes away from battery.**
- **Ventilate when charging or using battery in an enclosed space.**
- **Make sure venting path of battery is always open once battery is filled with acid.**
- **Always shield eyes and face from battery.**

⚠ DANGER

Battery electrolyte contains sulfuric acid, which is poisonous and can cause severe burns. Swallowing electrolyte can be fatal or if it touches skin can cause severe burns.

- **Wear safety glasses to shield eyes, and rubber gloves to protect skin and clothing when handling electrolyte.**
- **Do Not swallow electrolyte.**
- **In the event of an accident, flush with water and call a doctor immediately.**

⚠ CAUTION

If the ignition is in the "ON" position there is potential for sparks and engagement of components. Sparks could cause an explosion or moving parts could accidentally engage causing personal injury.

Be sure ignition switch is in the "OFF" position before charging the battery.

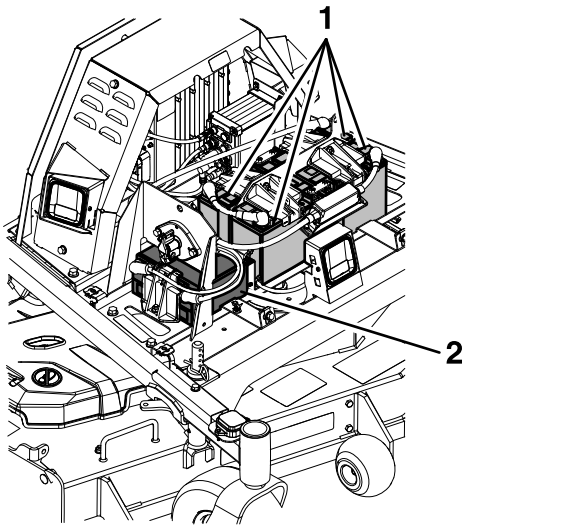

Figure 28

1. 48 Volt System (Four batteries)
2. 12 Volt System (One battery)

- **12 Volt System**

  The battery voltage will be displayed on the message display if the ignition key is turned to the "ON" position for a few seconds. You can also use a digital voltmeter with the key in the "ON" position and the engine turned off. Charge the battery to bring it up to a charge of 12.1 volts or greater.

- **48 Volt System**

  With the key in the "ON" position and the engine turned off, check each battery individually with a digital voltmeter. Charge each battery individually to bring it up to a charge of 12.1 volts or greater. All four batteries need to be charged to a minimum of 12.1 volts, and need to be within 0.3 volts of each other. If any of the batteries in the pack cannot meet these requirements, all four batteries must be replaced at the same time.

Important: When replacing the 48 Volt battery pack, use four identical Exmark batteries (P/N 142-7345). Charge each battery individually to a minimum of 12.1 volts and ensure each battery is within 0.3 volts of each other before installing. Failure to do so will reduce the life of the battery pack.

Important: In order to prevent damage to the battery, use an automatic 12 volt smart charger approved for use with AGM type batteries with an output of 3.5 amps or less. Make sure the negative battery cable is disconnected before charging and that the charger is set to the correct mode for 12 volt AGM batteries.

Important: For EFI machines: Unplug the harness from the ECU before performing any welding on the equipment.

Recommended Jump Starting Procedure– 12 Volt

Service Interval: As required

⚠ CAUTION

Corrosion or loose connections can cause unwanted electrical voltage spikes at anytime during the jump starting procedure.

Do Not attempt to jump start with loose or corroded battery terminals or damage to the engine or EFI may occur.

⚠ DANGER

Jump starting a weak battery that is cracked, frozen, has low electrolyte level, or an open/shorted battery cell, can cause an explosion resulting in serious personal injury.

Do Not jump start a weak battery if these conditions exist.

⚠ CAUTION

Connecting the jumper cables incorrectly (wrong polarity) can immediately damage the electrical and/or EFI system.

Be certain of battery terminal polarity and jumper cable polarity when hooking up batteries.

⚠ WARNING

Batteries contain acid and produce explosive gases.

- **Shield the eyes and face from the batteries at all times.**
- **Do Not lean over the batteries.**

1. Check the weak battery for terminal corrosion (white, green, or blue "snow"), it must be cleaned

off prior to jump starting. Clean and tighten connections as necessary.

2. Make sure the booster is a good and fully charged lead acid battery at 12.6 volts or greater. Use properly sized jumper cables (4 to 6 AWG) with short lengths to reduce voltage drop between systems. Make sure the cables are color coded or labeled for the correct polarity.

   Note: The following instructions are adapted from the SAE J1494 Rev. Dec. 2001 – Battery Booster Cables – Surface Vehicle Recommended Practice (SAE – Society of Automotive Engineers).

   Note: Be sure the vent caps are tight and level. Place a damp cloth, if available, over any vent caps on both batteries. Be sure the vehicles do not touch and that both electrical systems are off and at the same rated system voltage. These instructions are for negative ground systems only.

3. Connect the positive (+) cable to the positive (+) terminal of the discharged battery that is wired to the starter or solenoid as shown in Figure 29.

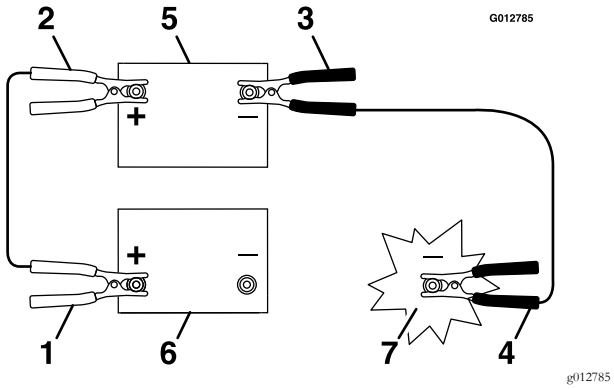

Figure 29

1. Positive (+) cable on discharged battery
2. Positive (+) cable on booster battery
3. Negative (–) cable on the booster battery
4. Negative (–) cable on the engine block
5. Booster battery
6. Discharged battery
7. Engine block

4. Connect the other end of the positive cable to the positive terminal of the booster battery.
5. Connect the black negative (–) cable to the other terminal (negative) of the booster battery.
6. MAKE THE FINAL CONNECTION ON THE ENGINE BLOCK OF THE STALLED VEHICLE (NOT TO THE NEGATIVE POST) AWAY FROM THE BATTERY. STAND BACK.
7. Start the vehicle and remove the cables in the reverse order of connection (the engine block (black) connection is the first to disconnect).

Note: A malfunctioning machine battery may cause the charging voltage to exceed 18.5 volts. The engine will turn off if there is a charge above 18.5 volts. Turn the ignition switch off, then on again to reset the engine before restarting the machine.

Check Mower Blades

Service Interval: Before each use or daily

1. Park the machine on a level surface, disengage the PTO, and move the motion control levers outward to engage the parking brake.
2. Shut off the machine, remove the key, and wait for all moving parts to stop before leaving the operating position.
3. Lift deck and secure in raised position as stated in the **Clean Grass Build-Up Under Deck** procedure in the deck Operator's manual.
4. Inspect blades and sharpen or replace as required.
5. Reinstall blades (if they were removed) in the following order:

   A. Install bushing through blade with bushing flange on bottom (grass) side of blade.

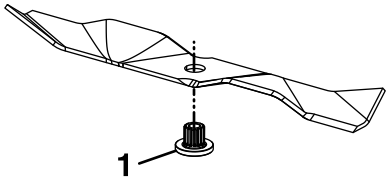

Figure 30

1. Install bushing in blade prior to installing bushing in spindle.

   B. Install bushing/blade combo into spindle.

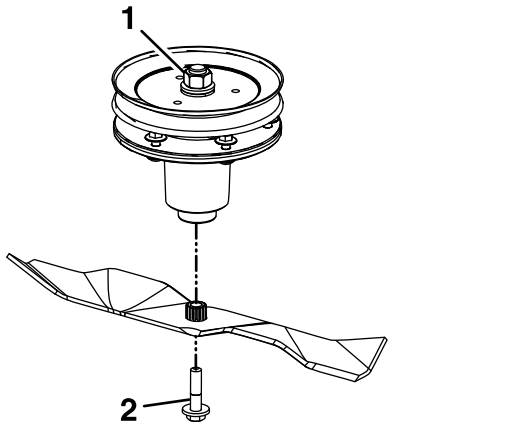

Figure 31

1. Use wrench here for blade installation. This nut has been torqued to 90–110 ft-lb (122–149 N-m)
2. Torque to 55-60 ft-lb (75-81 N-m) Apply lubricant to threads as needed to prevent seizing. Copper-based anti-seize preferable. Grease acceptable substitute.

C. Apply lubricant to threads of blade bolt as needed to prevent seizing. Copper-based anti-seize preferable. Grease acceptable substitute. Install blade bolt finger tight. Place wrench on the top spindle nut then torque the blade bolts to 55-60 ft-lb (75-81 N-m).

⚠ WARNING

Incorrect installation of the blade or components used to retain the blade can be dangerous. Failure to use all original components and assembled as shown could allow a blade or blade component to be thrown out from under the deck resulting in serious personal injury or death.

Always install the original Exmark blades, blade bushings, and blade bolts as shown.

Check Safety Interlock System

Service Interval: Before each use or daily

Important: It is essential that operator safety mechanisms be connected and in proper operating condition prior to use.

Note: If machine does not pass any of these tests, **Do Not** operate. Contact an Authorized Service Dealer.

Check the Normal Engine Starting Chart

Mode Select Switch Position	Engine State	PTO Switch Position	Motion Control Lever Position	Do this	Outcome
Manual	Off	Disengaged	Both levers out (park brake engaged)	Turn ignition switch from OFF to START position.	Starter should crank, engine should start, blades should not rotate.

Check PTO Switch

Mode Select Switch Position	Engine State	PTO Switch Position	Motion Control Lever Position	Do this	Outcome
Manual Or Auto	Off	Any	Both levers out (park brake engaged)	Turn ignition switch from OFF to START position.	Starter should crank, engine should start, blades should not rotate.
Manual	Running	Engaged (blades rotating)	One or both levers in	Disengage PTO switch.	Blades should stop rotating.

Check OPC

Mode Select Switch Position	Engine State	PTO Switch Position	Motion Control Lever Position	Do this	Outcome
Manual	Running	Engaged (blades rotating)	One or both levers in	Release both motion control levers (both levers out).	Blades should stop rotating.

Check Emergency Stop (E-Stop)

Mode Select Switch Position	Engine State	PTO Switch Position	Motion Control Lever Position	Do this	Outcome
Manual Or Auto	Running	Any	Any	Engage E-Stop.	Machine should shutdown, fault will trigger.
Manual Or Auto	Off	Any	Any	Engage E-Stop, then turn ignition switch from OFF to START position.	Starter should not crank, fault will trigger.

Check Obstacle Detection Sensors

Mode Select Switch Position	Engine State	PTO Switch Position	Motion Control Lever Position	Do this	Outcome
Auto	Running	Any	Any	Obstruct proximity sensor(s).	Machine should shutdown, fault will trigger.
Auto	Off	Any	Any	Obstruct proximity sensor(s), then turn ignition switch from OFF to START position.	Starter should not crank, fault will trigger.

Check StandOn Detection System

Mode Select Switch Position	Engine State	PTO Switch Position	Motion Control Lever Position	Do this	Outcome
Auto	Any	Any	Any	Change StandOn from stowed position to operating position.	Fault will trigger.

Check for Loose Hardware

Service Interval: Before each use or daily

1. Park the machine on a level surface, disengage the PTO, and move the motion control levers outward to engage the parking brake.
2. Shut off the machine, remove the key, and wait for all moving parts to stop before leaving the operating position.
3. Visually inspect machine for any loose hardware or any other possible problem. Tighten hardware or correct the problem before operating.

Service Air Cleaner

Service Interval: Every 250 hours—Replace the primary air cleaner element — check secondary air cleaner element; replace if dirty. (May need more often under severe conditions. See the Engine manual for additional information.)

Every 500 hours—Replace the secondary air cleaner element. (May need more often under severe conditions. See the Engine manual for additional information.)

1. Park the machine on a level surface, disengage the PTO, and move the motion control levers outward to engage the parking brake.
2. Shut off the machine, remove the key, and wait for all moving parts to stop before leaving the operating position.
3. See the Engine Owner's Manual for maintenance instructions.

Change Engine Oil

Service Interval: After the first 5 hours

Every 100 hours (May need more often under severe conditions.)

1. Park the machine on a level surface, disengage the PTO, and move the motion control levers outward to engage the parking brake.
2. Shut off the machine, remove the key, and wait for all moving parts to stop before leaving the operating position.
3. Drain oil while engine is warm from operation.
4. The oil drain hose is located on the left hand side of engine. Place pan under machine to catch oil. Remove plug from end of drain hose. Allow oil to drain and replace oil drain plug. Torque plug to 20-24 ft-lb.
5. Replace the oil filter every other oil change. Clean around oil filter and unscrew filter to remove. Before reinstalling new filter, apply a thin coating of Exmark 4–Cycle Premium Engine Oil on the surface of the rubber seal. Turn filter clockwise until rubber seal contacts the filter adapter then tighten filter an additional 1/2 to 3/4 turn.
6. Clean around oil fill cap and remove cap. Fill to specified capacity and replace cap.
7. Use oil recommended in the **Check Engine Oil Level** section. **Do Not** overfill. Start the engine and check for leaks. Stop engine and recheck oil level.

Changing the Transmission Fluid

Service Interval: After the first 50 hours

Every 500 hours

Fluid type: Exmark Synthetic Electric Motor Drive Oil

Capacity: 5 fl oz (150 mL)

1. Park the machine on a level surface, disengage the PTO, and move the motion control levers outward to engage the parking brake.
2. Shut off the machine, remove the key, and wait for all moving parts to stop before leaving the operating position.
3. Remove the tire.

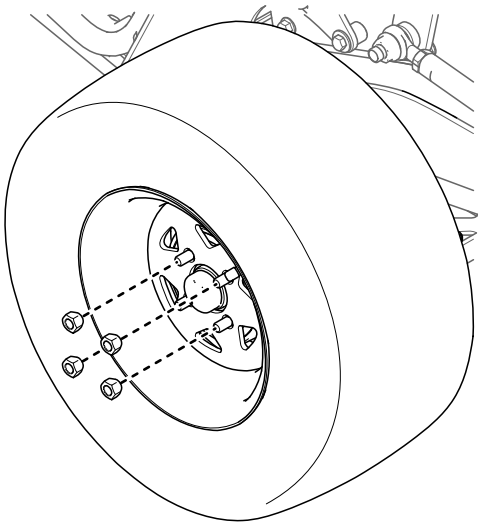

g380066

Figure 32

4. Place a drain pan under the transmission.
5. Remove the top plug and bottom plug. Allow the fluid to drain.

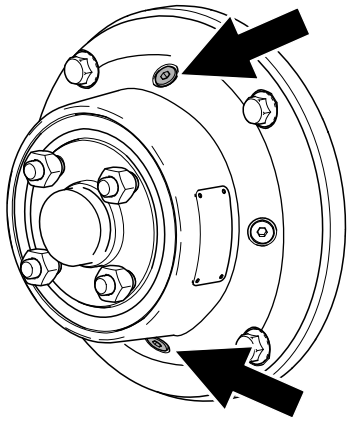

g380054

Figure 33

6. Install the bottom plug and torque it to 62 to 70 in-lb (7 to 8 N·m).
7. Remove a side plug.
8. Add fluid, as specified at the beginning of this procedure, through the top hole until the level reaches the side plug opening.

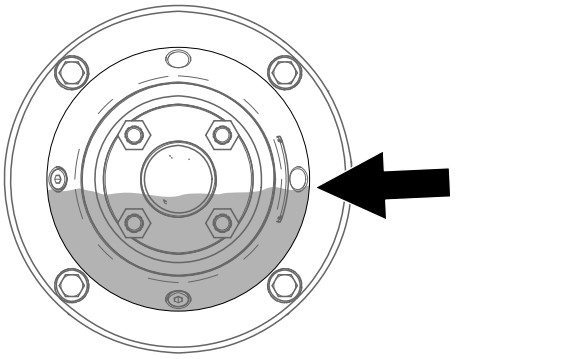

g380053

Figure 34

9. Install the top plug and side plug . Torque them to 62 to 70 in-lb (7 to 8 N·m).
10. Install the tire and torque the lug nuts to 80 to 90 ft-lb (108 to 122 N·m).
11. Repeat for the other transmission.

Check Tire Pressures

Service Interval: Every 40 hours

1. Park the machine on a level surface, disengage the PTO, and move the motion control levers outward to engage the parking brake.
2. Shut off the machine, remove the key, and wait for all moving parts to stop before leaving the operating position.
3. Check tire pressure in drive tires.
4. Inflate drive tires to 12–14 psi (83–97 kPa).
5. Inflate tires to pressures stated above. Measure the circumference of each drive tire. Adjust tire pressures within the above range to try to make tire circumferences match as closely as possible.

   Semi-pneumatic caster tires do not need to be inflated.

Note: Do Not add any type of tire liner or foam fill material to the tires. Excessive loads created by foam filled tires may cause failures to the hydro drive system, frame, and other components. Foam filling tires will void the warranty.

Check Condition Of Belts

Service Interval: Every 40 hours

1. Park the machine on a level surface, disengage the PTO, and move the motion control levers outward to engage the parking brake.

2. Shut off the machine, remove the key, and wait for all moving parts to stop before leaving the operating position.
3. Remove the two mower deck belt shields to check mower primary and secondary belt condition.
4. Look under engine deck to check the generator drive belt condition.
5. Check all idler arms to be sure they pivot freely.

Lubricate Grease Fittings

Note: See chart for service intervals.

1. Park the machine on a level surface, disengage the PTO, and move the motion control levers outward to engage the parking brake.
2. Shut off the machine, remove the key, and wait for all moving parts to stop before leaving the operating position.
3. Lubricate fittings with one to two pumps of NLGI grade #2 multi-purpose gun grease.

   Refer to the following chart for fitting locations and lubrication schedule.

Lubrication Chart			
Fitting Locations	**Initial Pumps**	**Number of Places**	**Service Interval**
1. Front Caster Wheel Hubs	*0	2	*Yearly
2. Front Caster Pivots	*0	2	*Yearly
3. Idler Pivots (Mower Deck) and Generator	1	1	Yearly
4. StandOn Wheel Hub	0	1	Yearly

* See step 4 for special lubrication instructions on the front caster pivots and the **Lubricate Caster Wheel Hubs** section for special lubrication instructions on the front casters wheel hubs.

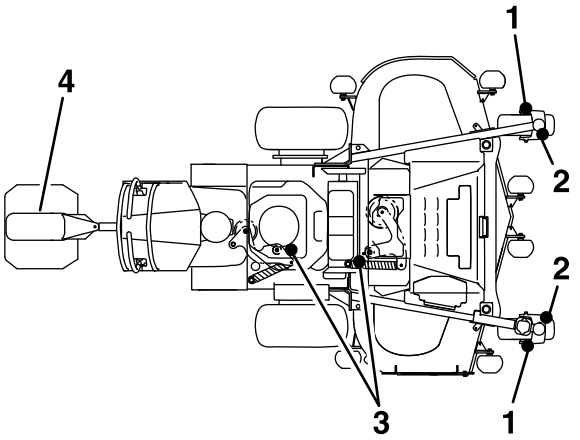

4. Lubricate front caster pivots once a year. Remove hex plug and cap. Thread grease zerk in hole and pump with grease until it oozes out around top bearing. Remove grease zerk and thread plug back in. Place cap back on.

Lubricate Caster Wheel Hubs

Service Interval: Yearly

1. Park the machine on a level surface, disengage the PTO, and move the motion control levers outward to engage the parking brake.
2. Shut off the machine, remove the key, and wait for all moving parts to stop before leaving the operating position.

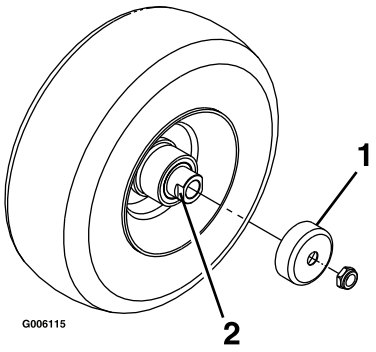

g006115

Figure 35

1. Seal guard
2. Spacer nut with wrench flats

3. Remove caster wheel from caster forks.
4. Remove seal guards from the wheel hub.
5. Remove one of the spacer nuts from the axle assembly in the caster wheel. Note that thread locking adhesive has been applied to lock the spacer nuts to the axle. Remove the axle (with the

other spacer nut still assembled to it) from the wheel assembly.

6. Pry out seals, and inspect bearings for wear or damage and replace if necessary.
7. Pack the bearings with a NLGI grade #1 multi-purpose grease.
8. Insert one bearing, one new seal into the wheel.

   Note: Seals (Exmark P/N 103-0063) must be replaced.
9. If the axle assembly has had both spacer nuts removed (or broken loose), apply a thread locking adhesive to one spacer nut and thread onto the axle with the wrench flats facing outward. Do Not thread spacer nut all of the way onto the end of the axle. Leave approximately 1/8 inch (3 mm) from the outer surface of the spacer nut to the end of the axle inside the nut.
10. Insert the assembled nut and axle into the wheel on the side of the wheel with the new seal and bearing.
11. With the open end of the wheel facing up, fill the area inside the wheel around the axle full of NLGI grade #1 multi-purpose grease.
12. Insert the second bearing and new seal into the wheel.
13. Apply a thread locking adhesive to the 2nd spacer nut and thread onto the axle with the wrench flats facing outward.
14. Torque the nut to 75-80 in-lb (8-9 N-m), loosen, then re-torque to 20-25 in-lb (2-3 N-m). Make sure axle does not extend beyond either nut.
15. Reinstall the seal guards over the wheel hub and insert wheel into caster fork. Reinstall caster bolt and tighten nut fully.

Important: To prevent seal and bearing damage, check the bearing adjustment often. Spin the caster tire. The tire should not spin freely (more than 1 or 2 revolutions) or have any side play. If the wheel spins freely, adjust torque on spacer nut until there is a slight amount of drag. Reapply thread locking adhesive.

Check Spark Plugs

Service Interval: Every 160 hours

Remove spark plugs, check condition and reset gaps, or replace with new plugs. See Engine Owner's Manual.

Change Fuel Filter

Service Interval: As required

A fuel filter is installed between the fuel tank and the engine. Replace when necessary.

Note: It is important to reinstall the fuel line hoses and secure with plastic ties the same as they were originally installed at the factory to keep the fuel line away from components that could cause fuel line damage.

Checking the Spark Arrester

Service Interval: Every 50 hours

⚠ WARNING

Hot exhaust-system components may ignite fuel vapors even after you shut off the engine. Hot particles exhausted during engine operation may ignite flammable materials, resulting in personal injury or property damage.

Do not refuel or run the engine unless the spark arrester is installed.

1. Park the machine on a level surface, disengage the PTO, and move the motion control levers outward to engage the parking brake.
2. Shut off the machine, remove the key, and wait for all moving parts to stop before leaving the operating position.
3. Wait for the muffler to cool.
4. If you see any breaks in the screen or welds, replace the arrester.
5. If the screen is plugged, remove the arrester, shake loose particles out of the arrester, and clean the screen with a wire brush (soak the screen in solvent if necessary).
6. Install the arrester on the exhaust outlet.

Inspect StandOn

Service Interval: Before each use or daily

1. Stop engine, wait for all moving parts to stop, and remove key. Engage parking brake.

2. Inspect for loose hardware. Tighten any loose hardware.
3. Inspect for wear or damage daily. Replace or repair worn parts as needed before operating.

Check StandOn for Buildup

Service Interval: Before each use or daily

Check for dirt/mud buildup between tire and fender. Remove buildup before operating.

Note: You can wash the StandOn with mild detergent and water. Do not pressure wash the machine.

Thread Locking Adhesives

Thread locking adhesives such as "Loctite 242" or "Fel-Pro, Pro-Lock Nut Type" are used on the following fasteners:

- Electric clutch retaining bolt.
- Generator drive idler pivot bolt.
- Caster wheel spacer nuts.

General Purpose Grease (Or Food-Grade Anti-seize)

General purpose grease (or food-grade anti-seize) is used in the following locations:

- Between the cutter housing spindle and bearings.
- Between the cutter housing spindle and sheave.
- Under top cutter housing bearing guard.

Dielectric Grease

Dielectric grease is used on all blade type electrical connections to prevent corrosion and loss of contact. Dielectric grease should not be applied to sealed connectors.

Adjustments

Note: Disengage PTO, shut off engine, wait for all moving parts to stop, engage parking brake, and remove key before servicing, cleaning, or making any adjustments to the unit.

Deck Leveling

See **Adjusting the Cutting Height** section in Operation.

Generator Drive Belt Tension

Self-tensioning - No adjustment necessary.

Deck Belt Tension

Self-tensioning - No adjustment necessary.

Electric Clutch Adjustment

No adjustment necessary.

Adjusting the Caster-Pivot Bearing

Service Interval: Every 500 hours/Yearly (whichever comes first)

1. Park the machine on a level surface, disengage the PTO, and move the motion control levers outward to engage the parking brake.
2. Shut off the machine, remove the key, and wait for all moving parts to stop before leaving the operating position.
3. Remove the dust cap from the caster.
4. Tighten the locknut until the spring washers are flat, and then back off a 1/4 turn to properly set the preload on the bearings.

   Important: Make sure that the spring washers are installed correctly as shown.
5. Install the dust cap.

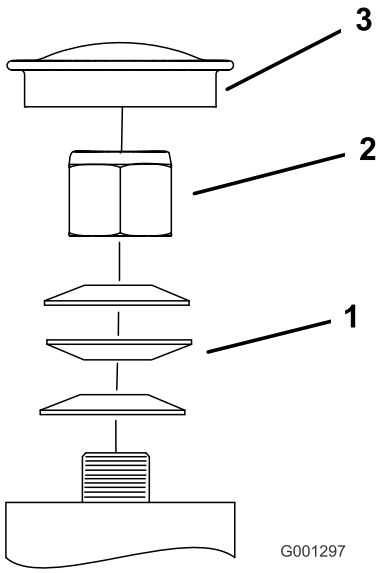

Figure 36

1. Spring washers
2. Locknut
3. Dust cap

Adjusting the Motion Control Levers

If the motion control levers do not align, adjust the motion-control levers.

1. Park the machine on a level surface, disengage the PTO, and move the motion control levers outward to engage the parking brake.
2. Shut off the machine, remove the key, and wait for all moving parts to stop before leaving the operating position.
3. Turn the battery disconnect switch to the Off position.
4. Push the motion control levers down out of the Park position.
5. Rotate the CAM to the point that holds the lever at the highest location while still being able to move the full forward position.
6. Verify that the lever does not rub on the edge of the T-box as this could cause it to bind.
7. Tighten the adjustment CAM.
8. When released from full forward position, the lever should return to the neutral location freely.

StandOn Tire Adjustment

To obtain additional ground clearance, the platform wheel can be repositioned (see Figure 37).

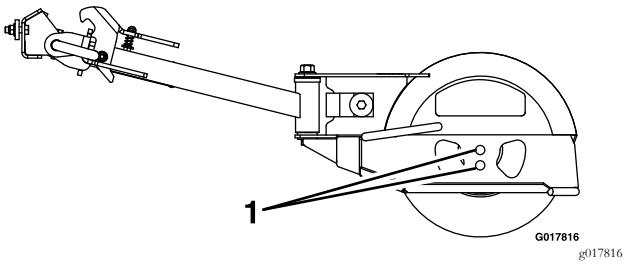

Figure 37

1. Wheel can be mounted in either hole for height adjustment

Note: To achieve more ground clearance for higher cutting heights, raise the platform by using the lower wheel adjustment hole.

Cleaning

Cleaning and Storing Safety

- Park machine on level ground, disengage drives, set parking brake, stop engine, remove key, and disconnect spark plug wire. Wait for all moving parts to stop before leaving the operator's position. Allow the machine to cool before servicing, adjusting, fueling, cleaning, or storing.
- Clean grass and debris from the cutting unit, muffler, drives, grass catcher, and engine compartment to prevent fires.
- Allow the machine to cool before storing the machine in any enclosure. Do not store the machine or fuel container, or refuel, where there is an open flame, spark, or pilot light such as on a water heater or other appliance.

Clean Debris From Machine

Service Interval: Before each use or daily

1. Park the machine on a level surface, disengage the PTO, and move the motion control levers outward to engage the parking brake.
2. Shut off the machine, remove the key, and wait for all moving parts to stop before leaving the operating position.
3. Clean off any oil, debris, or grass build-up on the machine and cutting deck, especially under deck belt shields, around the fuel tank, around engine and exhaust area.

   Important: You can wash the machine with mild detergent and water. Do not pressure wash the machine. Avoid excessive use of water, especially near the control panel, around the engine, generator, ACS tower, and motors.

Clean Engine and Exhaust System Area

Service Interval: Before each use or daily (May be required more often in dry or dirty conditions.)

⚠ CAUTION

Excessive debris around engine cooling air intake and exhaust system area can cause engine, exhaust area, and hydraulic system to overheat which can create a fire hazard.

Clean all debris from engine and exhaust system area.

1. Park the machine on a level surface, disengage the PTO, and move the motion control levers outward to engage the parking brake.
2. Shut off the machine, remove the key, and wait for all moving parts to stop before leaving the operating position.
3. Clean all debris from rotating engine air intake screen, around engine shrouding, and exhaust system area.
4. Wipe up any excessive grease or oil around the engine and exhaust system area

Clean Grass Build-Up Under Deck

Service Interval: Before each use or daily

1. Park the machine on a level surface, disengage the PTO, and move the motion control levers outward to engage the parking brake.
2. Shut off the machine, remove the key, and wait for all moving parts to stop before leaving the operating position.
3. Raise deck to the transport (maximum cutting height) position. Lift the front of unit and support the machine using jack stands or equivalent support.
4. Clean out any grass build-up from underside of deck and in discharge deflector.

Waste Disposal

Motor Oil Disposal

Engine oil and hydraulic oil are both pollutants to the environment. Dispose of used oil at a certified recycling center or according to your state and local regulations.

Battery Disposal

⚠ DANGER

Battery electrolyte contains sulfuric acid, which is poisonous and can cause severe burns. Swallowing electrolyte can be fatal or if it touches skin can cause severe burns.

- **Wear safety glasses to shield eyes, and rubber gloves to protect skin and clothing when handling electrolyte.**
- **Do Not swallow electrolyte.**
- **In the event of an accident, flush with water and call a doctor immediately.**

Federal law states that batteries should not be placed in the garbage. Management and disposal practices must be within relevant federal, state, or local laws.

If a battery is being replaced or if the unit containing the battery is no longer operating and is being scrapped, take the battery to a local certified recycling center. If no local recycling is available return the battery to any certified battery reseller.

Troubleshooting

Important: It is essential that all operator safety mechanisms be connected and in proper operating condition prior to mower use.

When a problem occurs, do not overlook the simple causes. For example: starting problems could be caused by an empty fuel tank.

The following table lists some of the common causes of trouble. Do Not attempt to service or replace major items or any items that call for special timing of adjustments procedures (such as valves, governor, etc.). Have this work done by your **Engine Service Dealer**.

Note: When disconnecting electrical connectors Do Not pull on the wires to separate the connectors.

Problem	Possible Cause	Corrective Action
Starter does not crank.	1. E-Stop is pressed.	1. Disengage the E-Stop.
	2. Speed control lever is are not in neutral park position.	2. Ensure the speed control lever is in the neutral park position.
	3. Battery does not have a full charge.	3. Charge the battery. See **Check Battery Charge** and **Recommended Jump Starting Procedure** sections in Maintenance.
	4. Electrical connections are corroded, loose or faulty.	4. Check the electrical connections for good contact. Clean connector terminals thoroughly with electrical contact cleaner, apply dielectric grease and reconnect.
	5. Fuse is blown.	5. Replace the blown fuse.
	6. Relay or switch is defective.	6. Contact an Authorized Service Dealer.
Engine will not start, starts hard, or fails to keep running	1. Fuel tank is empty.	1. Fill the fuel tank.
	2. Fuel shutoff valve is closed.	2. Open the fuel shutoff valve.
	3. The throttle is not in the correct position.	3. Be sure the throttle control is midway between the "SLOW" and "FAST" positions.
	4. Dirt in fuel filter.	4. Replace the fuel filter.
	5. Dirt, water, or stale fuel is in the fuel system.	5. Contact an Authorized Service Dealer.
	6. Air cleaner is dirty.	6. Clean or replace the air cleaner element.
	7. Electrical connections are corroded, loose or faulty.	7. Check the electrical connections for good contact. Clean connector terminals thoroughly with electrical contact cleaner, apply dielectric grease and reconnect.
	8. Relay or switch is defective.	8. Contact an Authorized Service Dealer.
	9. Faulty spark plug.	9. Clean, adjust or replace spark plug.
	10. Spark plug wire is not connected.	10. Check the spark plug wire connection.
	11. MIL illuminates and blinks.	11. Contact an Authorized Service Dealer.
Engine loses power	1. Engine load is excessive	1. Reduce the ground speed.
	2. Air cleaner is dirty.	2. Clean or replace the air cleaner element.
	3. Oil level in the crankcase is low.	3. Add oil to the crankcase.
	4. Cooling fins and air passages for the engine are plugged.	4. Remove the obstructions from the cooling fins and air passages.
	5. Vent hole in the fuel cap is plugged.	5. Clean or replace the fuel cap.
	6. Dirt in fuel filter.	6. Replace the fuel filter.
	7. Dirt, water, or stale fuel is in the fuel system.	7. Contact an Authorized Service Dealer.

Troubleshooting

Problem	Possible Cause	Corrective Action
Engine overheats	1. Engine load is excessive 2. Oil level in the crankcase is low. 3. Cooling fins and air passages for the engine are plugged.	1. Reduce the ground speed. 2. Add oil to the crankcase. 3. Remove the obstructions from the cooling fins and air passages.
Uneven cutting height.	1. Blade(s) not sharp. 2. Cutting blade(s) is/are bent. 3. Mower deck is not level. 4. Underside of mower is dirty. 5. Tire pressure in drive tires not correct. 6. Blade spindle bent. 7. Tips of adjacent blades are at an uneven cutting height. Blades tips should be even within 3/16 inch which is approximately one blade thickness.	1. Sharpen the blade(s). 2. Install new cutting blade(s). 3. Level mower deck from side-to-side and front-to-rear. 4. Clean the underside of the mower. 5. Adjust tire pressure in the drive tires. 6. Contact an Authorized Service Dealer. 7. Replace blades, spindles and (or) check for damage to mower deck.
Abnormal vibration	1. Cutting blade(s) is/are bent or unbalanced. 2. Blade mounting bolt is loose. 3. Engine mounting bolts are loose. 4. Loose engine pulley, idler pulley, or blade pulley. 5. Engine pulley is damaged. 6. Blade spindle is bent. 7. Belt is damaged.	1. Install new cutting blade(s). 2. Tighten the blade mounting bolt. 3. Tighten the engine mounting bolts. 4. Tighten the appropriate pulley. 5. Contact an Authorized Service Dealer. 6. Contact an Authorized Service Dealer. 7. Install new belt.
Blades do not rotate.	1. Deck belt is worn, loose or broken. 2. Deck belt is off pulley. 3. Broken or missing idler spring. 4. PTO clutch does not engage.	1. Install new deck belt. 2. Install deck pulley and check the idler pulley, idler arm and spring for correct position and function. 3. Replace the spring. 4. Contact an Authorized Service Dealer.
Machine runs into an obstacle and/or become immobilized.	1. Object not in the exclusion area. 2. Machine encounters a fault. 3. Sensors are dirty or not working properly. 4. Machine contacts an object.	1. Re-record the operating area. 2. Resolve the fault 3. Clean and inspect sensors. 4. Contact an Authorized Service Dealer.

Problem	Possible Cause	Corrective Action
Machine does not operate in autonomous mode.	1. Machine is not parked within a recorded operating area.	1. Make sure a valid operating area has been recorded and the machine is parked within that operating area.
	2. User acknowledgement has not been confirmed in the mobile app.	2. Open the mobile app and confirm the user acknowledgement.
	3. The StandOn is installed, but not in the stowed position.	3. Remove the StandOn or place it in the stowed position.
	4. The engine is not running or throttle is not set to high idle.	4. Turn engine on and set throttle to high idle position.
	5. The motion control drive levers are in the engaged position.	5. Release the motion control levers and allow them to return to OPC disengaged position.
	6. Mode select switch is not set to “Auto Mode” position.	6. Turn Mode select switch to “Auto Mode” position.
	7. An obstacle is being detected by the obstacle detection sensor.	7. Move any obstacles that are near the machine, or change to “Manual Mode” and move the machine away from obstacles.
	8. The machine has not acquired all of the required signals (GNSS, RTK, Cellular).	8. Move the machine to have a clearer view of the sky away from tall objects. Allow more time to acquire signals. Ensure the machine is in RTK coverage area. After moving the machine and allowing more time, power cycle the machine and try again. If problem persists, contact an Authorized Service Dealer.

Schematics

Electrical Logic Schematic

g523967

For Electrical Logic Schematic, see https://www.Exmark.com

California Proposition 65 Warning Information

What is this warning?

You may see a product for sale that has a warning label like the following:



WARNING: Cancer and Reproductive Harm—www.p65Warnings.ca.gov.

What is Prop 65?

Prop 65 applies to any company operating in California, selling products in California, or manufacturing products that may be sold in or brought into California. It mandates that the Governor of California maintain and publish a list of chemicals known to cause cancer, birth defects, and/or other reproductive harm. The list, which is updated annually, includes hundreds of chemicals found in many everyday items. The purpose of Prop 65 is to inform the public about exposure to these chemicals.

Prop 65 does not ban the sale of products containing these chemicals but instead requires warnings on any product, product packaging, or literature with the product. Moreover, a Prop 65 warning does not mean that a product is in violation of any product safety standards or requirements. In fact, the California government has clarified that a Prop 65 warning "is not the same as a regulatory decision that a product is 'safe' or 'unsafe.'" Many of these chemicals have been used in everyday products for years without documented harm. For more information, go to https://oag.ca.gov/prop65/faqs-view-all.

A Prop 65 warning means that a company has either (1) evaluated the exposure and has concluded that it exceeds the "no significant risk level"; or (2) has chosen to provide a warning based on its understanding about the presence of a listed chemical without attempting to evaluate the exposure.

Does this law apply everywhere?

Prop 65 warnings are required under California law only. These warnings are seen throughout California in a wide range of settings, including but not limited to restaurants, grocery stores, hotels, schools, and hospitals, and on a wide variety of products. Additionally, some online and mail order retailers provide Prop 65 warnings on their websites or in catalogs.

How do the California warnings compare to federal limits?

Prop 65 standards are often more stringent than federal and international standards. There are various substances that require a Prop 65 warning at levels that are far lower than federal action limits. For example, the Prop 65 standard for warnings for lead is 0.5 µg/day, which is well below the federal and international standards.

Why don't all similar products carry the warning?

- Products sold in California require Prop 65 labelling while similar products sold elsewhere do not.
- A company involved in a Prop 65 lawsuit reaching a settlement may be required to use Prop 65 warnings for its products, but other companies making similar products may have no such requirement.
- The enforcement of Prop 65 is inconsistent.
- Companies may elect not to provide warnings because they conclude that they are not required to do so under Prop 65; a lack of warnings for a product does not mean that the product is free of listed chemicals at similar levels.

Why does Exmark include this warning?

Exmark has chosen to provide consumers with as much information as possible so that they can make informed decisions about the products they buy and use. Exmark provides warnings in certain cases based on its knowledge of the presence of one or more listed chemicals without evaluating the level of exposure, as not all the listed chemicals provide exposure limit requirements. While the exposure from Exmark products may be negligible or well within the "no significant risk" range, out of an abundance of caution, Exmark has elected to provide the Prop 65 warnings. Moreover, if Exmark does not provide these warnings, it could be sued by the State of California or by private parties seeking to enforce Prop 65 and subject to substantial penalties.

Notes:

Notes:

Service Record

Date:	Description of Work Done:	Service Done By:

MAXIMIZE THE PERFORMANCE OF YOUR EXMARK MACHINE.



EXMARK® PREMIUM ENGINE OIL

Exmark now offers a family of engine oil viscosities to perform well in any environment. Each viscosity has the same synthetic formulation to give you what you need in punishing conditions. We designed each grade to the highest quality, making it ideal even for diesel applications. Coupled with Exmark Premium Fuel Treatment, we have the performance products to make your machine hum.

EXMARK PREMIUM ENGINE OIL SAE 30/10W-30

- Meets zero shear requirements of a straight grade SAE 30 as well as the cold temp properties of a 10W-30.
- Most versatile oil in the industry.
- Superior corrosion protection over conventional oil - even in corrosive, humid environments.

EXMARK PREMIUM ENGINE OIL SAE 10W-50

- Full synthetic formulation gives you peak performance. Don't settle for less.
- Wide span multi-grade combines easy starting in cold weather with maximum protection in high temperature operation.
- Reduce friction & wear over standard mineral formulations.

EXMARK PREMIUM ENGINE OIL UTV FORMULATION

- 4-cycle high-temp formulation.
- Heavier viscosity, full synthetic, perfect for your UTV.

EXMARK PREMIUM ENGINE OIL SAE 20W-50

- Perfect for your big block engine, or any application in severe service.
- Same full synthetic formulation as all other Exmark Premium viscosities.
- Also effective for use in severe service small block engines.

EXMARK PREMIUM ENGINE OIL SAE 0W-40

- The perfect choice for when the weather turns cold or unpredictable, and your Exmark UTV has to perform.
- Commercial quality for severe service.
- Advanced additive package helps prevent corrosion from long-term storage.

EXMARK PREMIUM UTV EXTREME CONDITIONS GEAR OIL

- SAE 80W-90, designed to keep your UTV performing at its peak.
- Shear stable, hypoid gear lube.
- Includes a premium additive system to combat wear, oxidation, rust & corrosion.

Available from your local Exmark dealer. Find your closest dealer at exmark.com

EXMARK ACCESSORIES AND OPTIONS*

MID-MOUNT RIDING ACCESSORIES AND OPTIONS

CUSTOM RIDE SEAT SUSPENSION SYSTEM
FULL SUSPENSION SEAT
DECK LIFT ASSIST KIT
HITCH KIT
LIGHT KIT
12V POWER PORT
MICRO-MULCH SYSTEM
OPERATOR CONTROLLED DISCHARGE
SUN SHADE
TRASH CONTAINER
TURF STRIPER
ULTRA VAC COLLECTION SYSTEM
ULTRA VAC QUICK DISPOSAL SYSTEM

OUT-FRONT RIDING ACCESSORIES AND OPTIONS

CUSTOM RIDE SEAT SUSPENSION SYSTEM
DUAL-TAIL WHEEL
FLOOR PAN EXTENDER
HITCH KIT
LIGHT KIT
MICRO-MULCH SYSTEM
ROLL OVER PROTECTION SYSTEM (ROPS)
SNOW BLADE
SNOWBLOWER
SUN SHADE
TRASH CONTAINER
ULTRA VAC COLLECTION SYSTEM
ULTRA VAC QUICK DISPOSAL SYSTEM
WEATHER CAB

WALK-BEHIND ACCESSORIES AND OPTIONS

GRASS CATCHER
MICRO-MULCH SYSTEM
TURF STRIPER
STANDON

*Some accessories and options not available for some models.

Place Model No. and Serial No. Label Here (Included in the Literature Pack) or Fill in Below

Model No. _____

Serial No. _____

Date Purchased _____

Engine Model No. and Spec. No. _____

Engine Serial No. (E/No) _____

©2026 Exmark Mfg. Co., Inc.
415 Industrial Row
Beatrice, NE 68310
All Rights Reserved

Part No. 3480-618 Rev. A
(402) 223-6375
Printed in the USA



www.exmark.com