TURBRO

Diesel Heater User Manual

ARCADE

Model: S8BP



IMPORTANT SAFEGUARDS: READ ALL INSTRUCTIONS BEFORE USE.

Improper handling and/or installation of the heater may result in fire hazards and property damage due to the presence of fuel and electrical components. Strict adherence to all safety and installation instructions is mandatory.

RETAIN THIS MANUAL FOR FUTURE REFERENCE

CONTENTS

SAFETY INSTRUCTIONS – – – – – – – – – – – – – – – – – – – 01

FUNCTION OVERVIEW – – – – – – – – – – – – – – – – – – – 02

PACKAGE CONTENTS – – – – – – – – – – – – – – – – – – – 03

SPECIFICATIONS – 04

INSTALLATION – 05

OPERATING – 13

BLUETOOTH CONTROL – – – – – – – – – – – – – – – – – – 17

FCC STATEMENT – 19

MAINTENANCE – 20

TROUBLESHOOTING – – – – – – – – – – – – – – – – – – – 21

WARRANTY INFORMATION – – – – – – – – – – – – – – – – 24

SAFETY INSTRUCTIONS

Please read all instructions before attempting to assemble, operate, or install the product.

To reduce the risk of fire, electric shock, or injury to persons, observe the following:

- Use this unit only in the manner intended by the manufacturer.
- Do not use or install the heater in places where flammable vapors or gases or large amounts of dust may form and accumulate.
- Disable the heater when the fuel tank is being fueled.
- Do not cover the heater with clothing, pieces of fabric, and so on, and do not place such objects in front of the air intake pipe or inlet and outlet of the heated air.
- Do not install the fuel hose inside the cabin of a vehicle.
- The installation arrangement must exclude the possibility of contact of the exhaust pipe with the air intake, fuel pipe, or other flammable objects.
- The vehicle or place where the heater is installed must be equipped with a fire extinguisher.
- Do not install electric wiring (harnesses) of the heater near the fuel pipe and the exhaust pipe.
- Disconnect the heater from its electric power during repair work on the heater.
- To prevent electrical damage, never power the heater from the vessel's circuit while the engine is running without a battery connected.
- Do not disconnect power while the heater is in operation.
- When electric welding is carried out on the vehicle or repair work is made on the heater, the heater must be disconnected from the battery.
- Take the safety precautions, which must be observed when working with electrical and fuel systems, when installing and dismantling the heater.
- Do not disconnect the heater from power before the purge cycle ends.
- When the heater has been switched off, do not switch it on again for 5-10 seconds.

- Due to poisonous exhaust gases and risk of suffocation, **DO NOT** use the heater in closed and/or unventilated places (e.g., garage, workshop, etc.)
- Do not step on the heater or put any objects on it or in it.
- Electric wiring, the air intake, and the fuel pipe must be protected from contact with the sharp edges of vehicle structures.

If the consumer fails to follow the requirements above, the warranty of the heater becomes null and void.

SAVE THESE INSTRUCTIONS

FUNCTION OVERVIEW

This heater is an independent heating device that reduces damage caused by sudden temperature drops to vehicles. It increases the cabin temperature, preheats the engine coolant, and minimizes engine wear in low temperatures. It also facilitates cabin de-icing, cold starts, and windshield defogging. Operating independently of the vehicle's original heating system, it provides continuous heating regardless of whether the engine is running. It can even be used in camping tents and household rooms, but always keep the area well-ventilated. Never use in sealed spaces.

PACKAGE CONTENTS



Diesel Heater Unit



LCD Control Panel



Remote Control



Air Outlet Pipe



Rotary Tuyere



Air Intake Pipe



Intake Air Filter



Exhaust Pipe



Silencer



Silencer Fixing Accessories



Exhaust Pipe Clip x 2



Mounting Plate



Fuel Hose



Fuel Hose Clips



Fuel Pump



FLexible Rubber Clamp



Fuel Filter



Clamp ϕ19-29mm x 4



Wire Harness



Fixed Cables



15L Fuel Tank



Clamp ϕ0-83mm x 2



Fuel Tank Stand Pipe



Installation Hardness

SPECIFICATIONS

Model: S8BP

Power Supply: 12V / 24V DC

Rated Current: 3A

Product Features

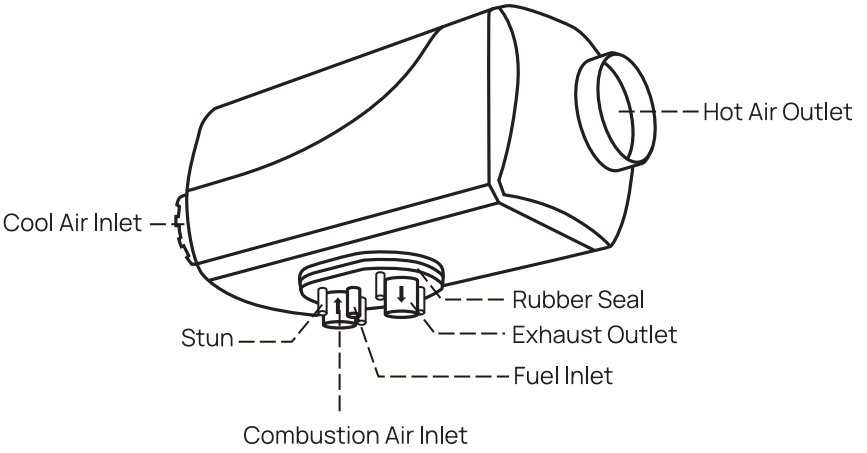

Internal Structure Of The Main Machine

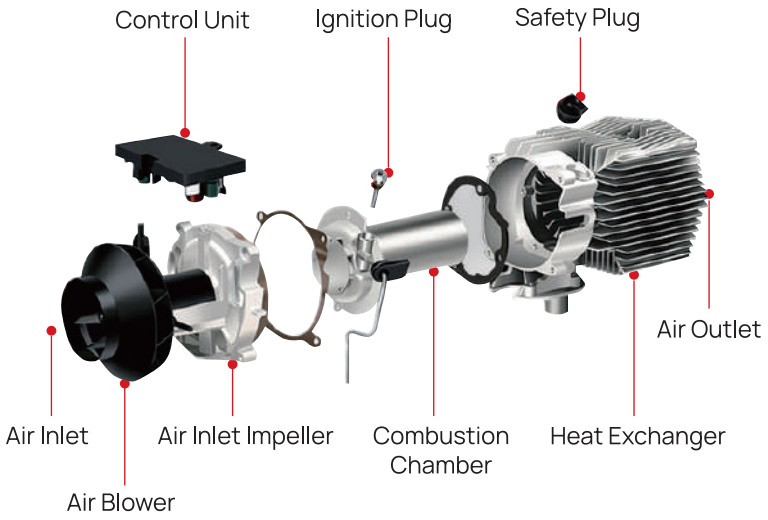

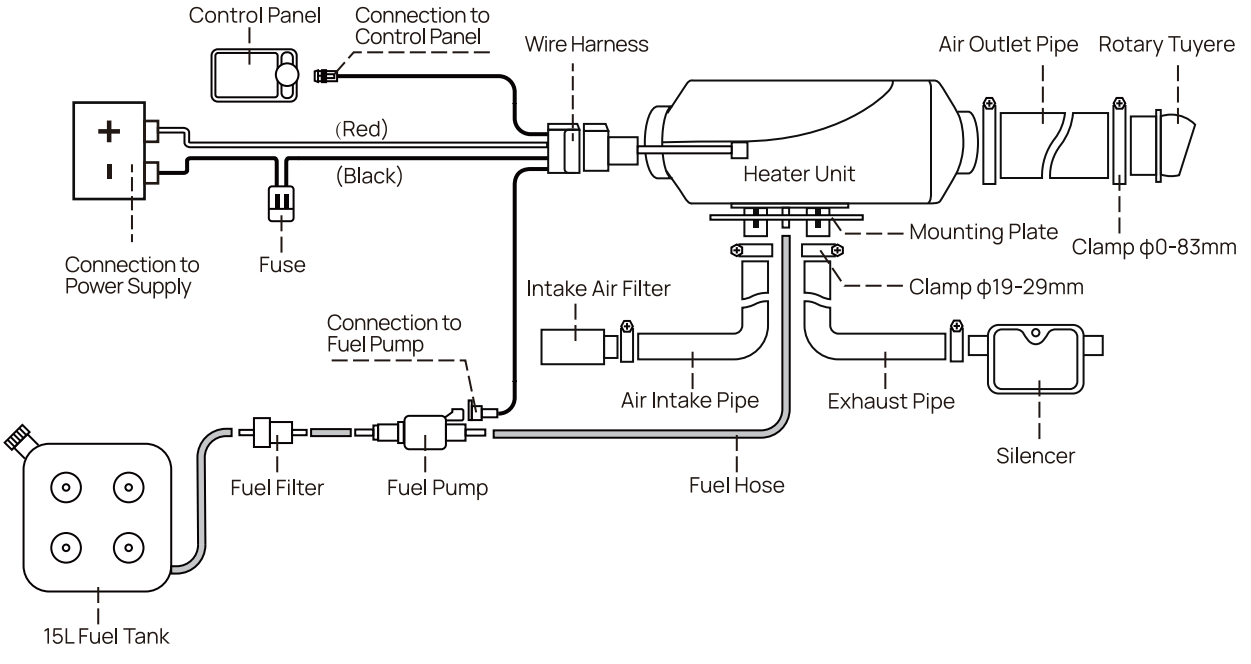

Installation Diagram

DO NOT install near flammable or heat-sensitive objects such as sails, fenders, clothing, sheets, paper, gas pipelines, fuel tanks, etc.

WARNING!!! Reliable operation of the heater depends on the correct installation of the heater. The heater must be installed horizontally.

Installation of the Heater Unit

The distance from surrounding objects must be sufficient to ensure good ventilation. The distance from walls and partitions to the start of the Cool Air Inlet opening of the heater must be no less than 2 in/50 mm.

Provide protection from penetration of foreign objects into intake and output openings when installing and operating the heater. Install the heater in a location that allows for convenient maintenance work.

Use the mounting plate as a reference to determine the exact positions for each hole. Clearly mark the spot for each hole.

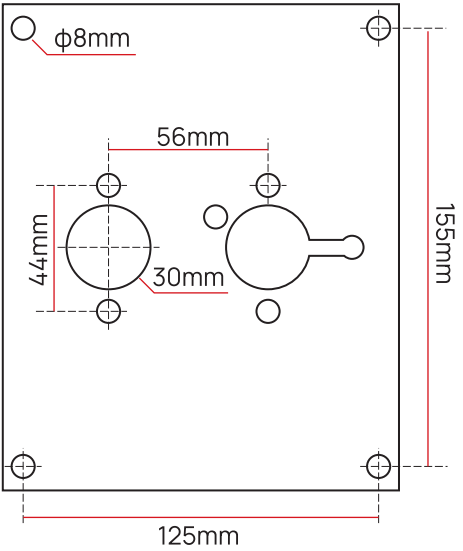

Use a hole saw and power drill to cut through the floor of the vehicle. The holes are necessary to allow the pipes and hoses to connect and vent outside of the van.

Installation of the Air Intake Pipe

The air for combustion must not be taken from the interior, engine, or luggage compartment of the vehicle or vessel. Air should be taken from well-ventilated areas or from outside of the vehicle or vessel.

The air pipe must be as short as possible (cut to the necessary length).

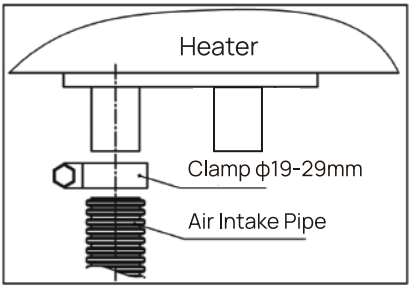

WARNING: It is forbidden to use the heater without an air intake pipe.

The air intake pipe is connected directly to the air inlet of the heater and fastened with a clamp. When laying the air intake pipe, avoid sharp bends and do not obstruct the opening of the air intake pipe with foreign objects.

Make sure its opening is pointing downwards.

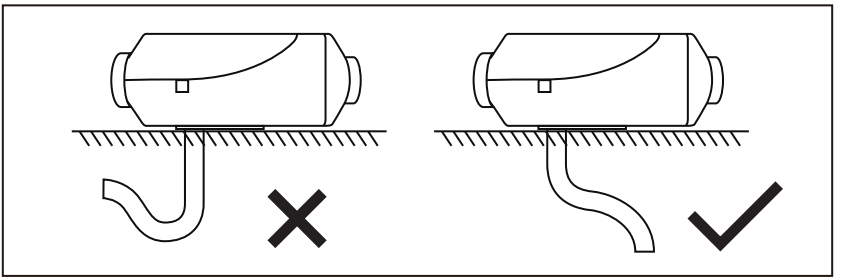

Installation of the Exhaust Pipe

When installing the exhaust pipe, take into consideration the high temperature (up to 752℉/400℃) of the exhaust pipe when heater is in operation. Attach the exhaust pipe using clamps and install it so that it is slightly inclined to the bottom in the direction of the exhaust. Install heat insulation on the exhaust pipe to protect individual sections of the vessel (wiring or other heat-sensitive objects).

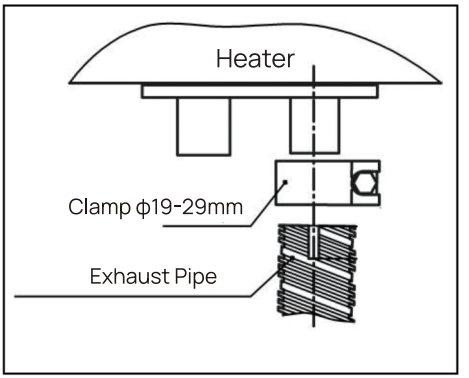

Warning: Install the exhaust pipe to avoid the possibility of repeated intake of exhaust gases by the air intake pipe, and make sure that no exhaust gases enter the interior or are drawn in by the fan through the cab heater radiator.

The outlet of the exhaust pipe must be installed pointing downwards, but it should be in such a position that would prevent clogging or entry of snow and dirt, and also provide for free drainage of any water that gets into it.

Warning: Maintain minimum 7.9 in (20 cm) separation between pipe openings to prevent exhaust gas recirculation.

Installation of the Fuel System

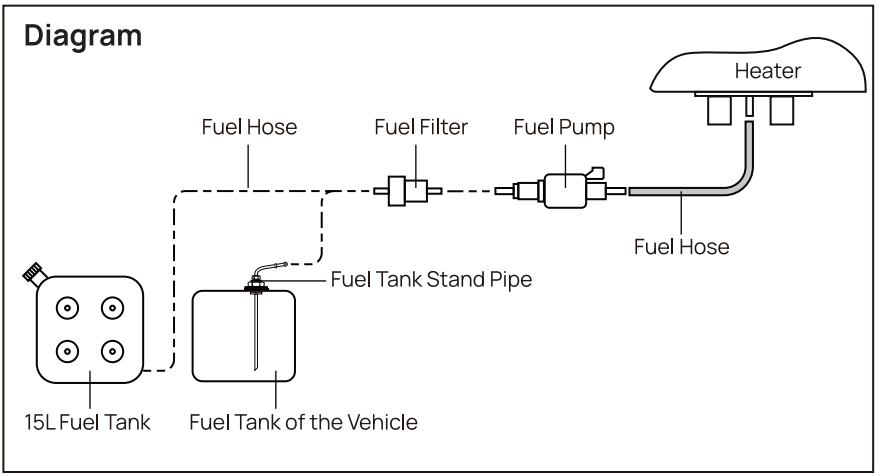

WARNING: The fuel pump and the fuel supply line must be protected from heating.

Fuel line system should be as short as possible and secured with fuel hose clips. Recommended maximum length of the fuel line is 16.4 ft/5 m. The distance between the fuel tank and the fuel pump should not exceed 3.28 ft/1 m, and the distance between the fuel pump and the heater should not exceed 13.12 ft/4 m. The fuel filter is installed between the fuel tank and the fuel pump.

It is recommended to install the fuel pump close to the fuel tank (distance should not exceed 3.28 ft/1 m) with its vertical position above the tank's minimum fuel level but not exceeding 2.3 ft/70 cm. But the vertical height between the fuel pump and the heater cannot exceed 4.9 ft/1.5 m. Fuel pump should be positioned with a slight angle pointing upwards, and using the flexible rubber clamp for secure mounting.

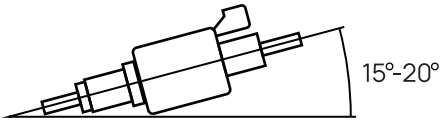

If for some reason the seal of the fuel pump is compromised, it is advised to install the fuel pump lower than the heater in order to avoid gravity induced leaks or excessive fuel surge into the heater.

Fuel Suction from the Included Fuel Tank

When installing the fuel tank, consider the ease of refueling. Install the fuel tank in such a way that the amount of fuel and its potential leaks from the inlet, fuel suction nozzle or connections can be visually controlled. Choose the most suitable location. Aim to maximize stability and minimize spillage and exposure to fumes. Use the fixing screws or similarly strong fasteners to secure the fuel tank to the floor or wall through the four holes in the tank body.

Open the fuel tank and take out the small bag with accessories. Select a location for the fuel line and drill a 0.27 in/7 mm hole in either the side or bottom of the tank. Thread a piece of wire (not included), e.g. an unbent wire coat hanger, through the hole and up to the opening at the top of the tank. Place the fuel line nipple on the end of the wire at the top use the wire to guide it through the hole in the bottom. Secure the nipple in place with an

O-ring and the fuel line nipple nut on the outside of the tank. Connect the fuel hose and fasten it with fuel hose clips.

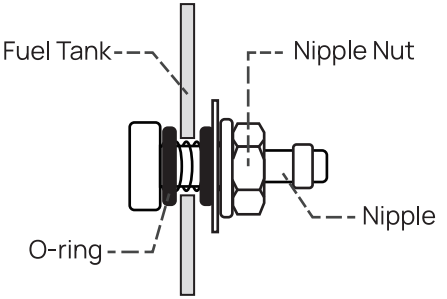

Warning: When filling the fuel tank, be careful not to spill any of the fuel on the exhaust system, wiring, or other objects, which can be damaged due to their contact with fuel.

Fuel Suction from the Fuel Tank of the Vehicle

Fuel is taken directly from the fuel tank of the vehicle or vessel. Drill a hole Ø25±0.2 mm on the fuel tank (or tank cover) to install the fuel tank stand pipe. When drilling the hole on the fuel tank, follow safety precautions that should be observed when working with a transport, which is filled with fuel or explosive substance.

Warning: Never install the stand pipe on the side of the fuel tank. It must be installed on the top side of the fuel tank.

The fuel tank stand pipe needs to be straightened first and cut to length as required; the cut at the end of the fuel suction hose must be made at a 45°angle to the axis of the tube. Remove all burrs from the cut after the work is done.

The bottom end of the stand pipe shall be 1.2-1.6 in/30-40 mm away from the bottom of the fuel tank to ensure that sufficient fuel is sucked in while avoiding the intake of impurities and sediment from the bottom of the fuel tank.

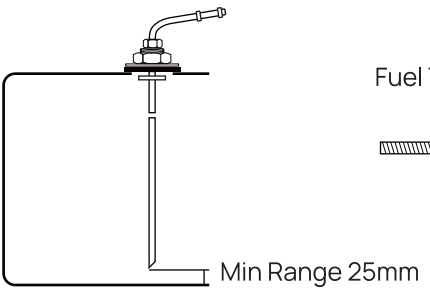

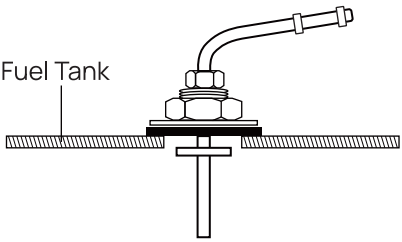

Wiring

Install electric harnesses of the heater according to the Installation Diagram.

When installing electrical harnesses, eliminate the possibility of the harness being heated. Install all the wire harnesses and electrical elements in dry and protected places. Wires must not be deformed or moved when the vehicle or vessel is operated.

- Connect the positive (red) and negative (black) wires to the battery terminals.

- Connect the wiring bundle to the diesel heater.

- Connect the wiring to the fuel pump.

- Connect the wiring to the control panel.

Battery of the vehicle or an auxiliary battery powers the heater. Control the charge of the battery on a regular basis. It is recommended to disconnect the heater from the battery to avoid its discharge during long dockage or storage of the vessel or vehicle. Do not disconnect the heater from power before the purge cycle ends.

Heater must be connected to uninterrupted power supply at all times. Cutting the power to the heater will result in loss of settings (clock, operation mode and settings).

Installation of the Control Panel

The control panel is intended for control of operation of the heater. Install the panel in a convenient and appropriate place protected from water. The panel is attached using double-sided adhesive tape or a standard bracket.

Perform First Startup Test After Installation

The heater should not be used until the system has been fully installed!

After installation, check:

- clamp tightness;

- voltage of the battery;

- reliability of the connection between the electrical contacts of the harness and the heater assembly.

Fill the fuel main line with fuel (see Oil Pumping Mode in the Operating Chapter.If necessary, perform the operation multiple times.). When the fuel system is filled, check that the fuel supply line is sealed.

Start the heater and check its operation in minimum and maximum gear modes (see Gear Mode in the Operating Chapter.). Check tightness and sealing of all connections of air ducts and fuel supply lines.

Run the heater in maximum gear mode for about 2 hours.

NOTE: Upon first startup, smoke may be emitted from exhaust pipe for a short period of time.

NOTE: During the first few hours of operation, the heater may emit an unpleasant odor. To remove the odor, run the heater for several hours at maximum power. Ensure the installation location is well ventilated.

OPERATING

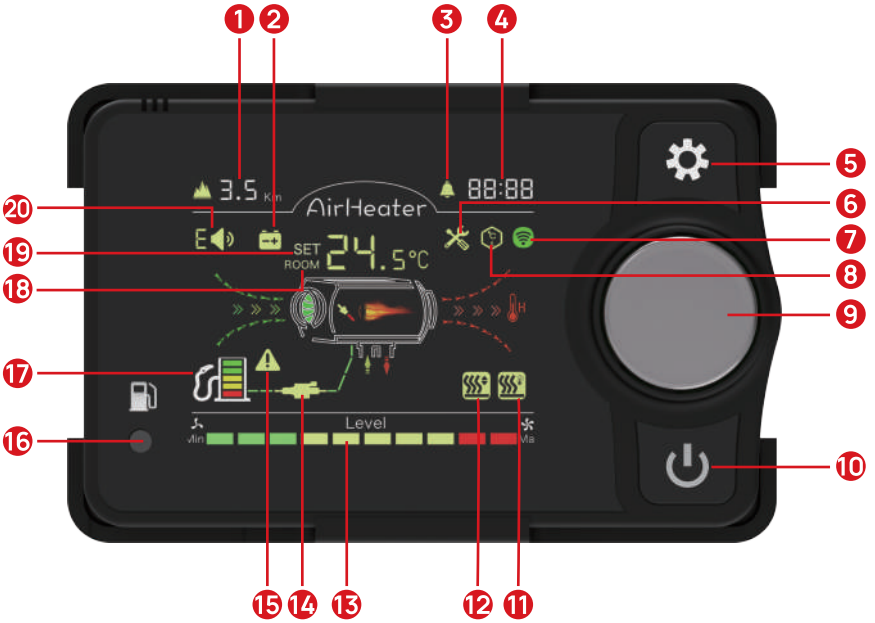

1. Altitude
2. Abnormal Voltage
3. Timer Icon
4. Current Time
5. Setting Button
6. Malfunction Icon
7. Remote Control Matched Icon
8. Automatic Start/Stop Heating Icon
9. Knob
10. Power Button
11. Temperature Mode
12. Gear Mode
13. Gear Output
14. Pump Icon
15. Warning Icon
16. Pump Button
17. Fuel Volume
18. Room Temperature
19. Set Temperature
20. Language

Remote Control

The remote control can be used up to 164 feet (50 meters) away from the heater, so long as there are no obstructions between the remote control and the heater.



After pressing the Power Button to shut down, the heater will not turn off immediately, accompanied by audible fan operation. This is the purge cycle—a normal process. Do not disconnect power until the purge cycle fully completes.

Self-test:

After power-on, the LCD control panel will perform a startup animation (including a brief full-screen display) before indicating readiness.

Oil Pumping Mode:

Designed to pre-fill the fuel system after initial use or prolonged inactivity, enabling faster startup.

Hold down Pumping Button for 7 seconds during the power-on Self-test to enter the oil pumping mode. The screen displays a 300-second countdown, and oil pumping begins immediately. After the countdown is completed, the process finishes, and the heater will automatically exit and shut down. During oil pumping, press the [⏻] Power Button to exit the oil pumping mode and shut down the heater.

Press the Power Button to turn the heater on, and it start to work and it will take 3-5 minutes to heat up, please wait patiently. During this period, you will start to hear the oil pump begin to start ticking, and the air from the air outlet will start to heat up.

Note: It is normal for the heater to emit smoke when it is first turned on.

Working Mode - Temperature Mode:

Designed to automatically heat the space to the set temperature (8-36°C/46.4-96.8°F).

In this mode, the heater intelligently adjusts its gear to reach the desired temperature more efficiently and economically.

Working Mode - Gear Mode:

Designed to manually set a power output (1-10 gears) to heat the space.

In this mode, the heater continuously operates at the selected gear to maximize heat output. For long-term efficiency, we recommend reducing gears or switching to Temperature Mode once the desired temperature is achieved.

Working Mode Switching:

In the startup state, press the Knob Button to switch between the Gear mode and Temperature mode, and adjust the setting by rotating the Knob Button.

Basic Settings :

After powering on, hold down [⚙] Setting Button for 3 seconds to enter the basic setting interface. The setting items are directly displayed on the screen. Select different setting items by rotating the Knob Button. Press the Knob Button to enter the corresponding setting interface, and the adjustable parameters will flash. Then adjust the parameters by rotating the Knob Button, and switch or confirm the parameters by pressing the Knob Button. After all the parameters in the basic settings are set, hold down [⚙] Setting Button for 3 seconds to save the setting data and exit the running interface.

The interface displays the specific data for the setting item:

F0: Current time

F1: Scheduled start time (the time when the heater turns on)

F2: Running duration (after F1)

F3: Delay start timer (a countdown period before the heater turns on)

F4: Language switching: E (English),C (Chinese), R (Russian), – (Voice off)

F5: Temperature Calibration (range –9 to 9°C/15.8 to 48.2°F)

F6: Fuel volume in the fuel tank (range 5–50L ,Display – represents not monitoring the fuel tank condition)

F7: Oil pump type (16/22/28/32UL ,default: 22UL)

F8: Bluetooth pairing switch

F9: Temperature unit switch (Celsius/Fahrenheit)

FA: Plateau altitude unit switch (Kilometer/Kilofeet)

Fb: Screen brightness adjustment (range 0-100%)

Fill Up the Tank:

After refilling the fuel tank, press and hold the Pump Button for 7 seconds, and the Fuel Volume icon will show the full fuel status again.

Engineering Mode:

In the startup state, hold down [⚙] Setting and [⏻] Power Buttons together for 3 seconds to enter the engineering mode. The upper right corner displays the current item. Rotate the Knob to switch between all items. The interface displays the specific data of engineering mode: After viewing, press [⏻] Power Button to exit to the homepage.

En00	Heater motherboard version number (scrolling display)
En01	Fault code[see the Troubleshooting Part for details]
En02	Shell temperature of the heat exchanger
En03	Power supply voltage
En04	Heater running gear
En05	Room temperature
En06	Altitude
En08	Remote control pairing
En09	Bluetooth matching

BLUETOOTH CONTROL

Note: The effective control distance of Bluetooth is 98 feet (30 meters).

A. Scan the QR code below or search 'airHeaterBle' on App Store or 'AirHeaterBLE' on Google Play and download it.



AirHeater APP

Download on the App Store

GET IT ON Google Play

B. Turn on the Bluetooth of your phone or device.

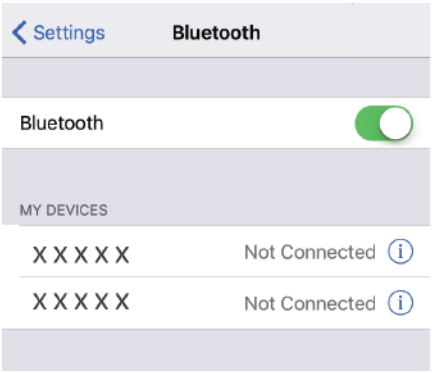

C. Query the Bluetooth number: press [⚙] Setting and Knob Buttons together for 3 seconds after power on, the screen displays 'bLE', the Bluetooth number of the upper side of the screen displays the 6-digit character name (0-F).

D. Open the APP, click the Bluetooth symbol in the upper right corner of the APP, and find the corresponding Bluetooth number in the format of "BYD + MAC address + 4 letter", and then click the Bluetooth number to connect.

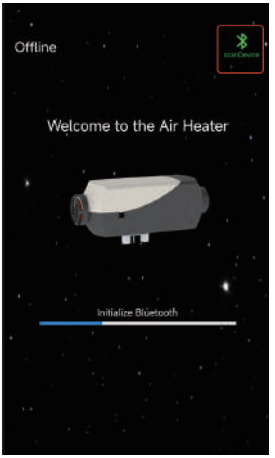

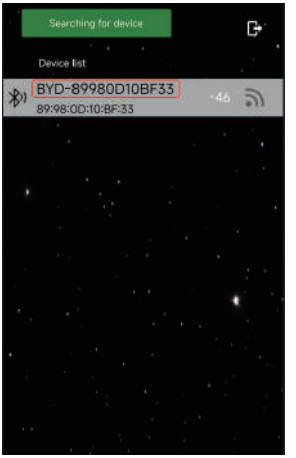

E. Hold down the [⏻] Power Button for seconds to turn OFF or ON the heater.



Change The Bluetooth Connection Password.

F. Click the Setting Button to enter the settings page. After setting the password, click the "Save" Button to save the settings. After changing the password on the APP, please pay attention to updating the password of the control panel synchronously. Press and hold down [⚙] Setting and [⏻] Power Buttons together for 3 seconds Buttons on the control panel for 3 seconds to enter the engineering mode and choose En09, the interface displays "bLE". Then press and hold the Knob Button for 3 seconds, the flashing original password is changed to the new password on the upper right corner and save. After the update is successful, it will automatically return to the running interface.

Please note that the APP password and control panel password must be consistent in order to connect.

FCC STATEMENT

This device complies with part 15 of the FCC Rules. Operation is subject to the following two conditions: (1)This device may not cause harmful interference, and (2) this device must accept any interference received,including interference that may cause undesired operation.

This equipment has been tested and found to comply with the limits for a Class B digital device, pursuant to part 15 of the FCC Rules. These limits are designed to provide reasonable protection against harmful interference in a residential installation. This equipment generates, uses and can radiate radio frequency energy and.if not installed and used in accordance with the instructions, may cause harmful interference to radio communications. However, there is no guarantee that interference will not occur in a particular installation. If this equipment does cause harmful interference to radio or television reception, which can be determined by turning the equipment off and on, the user is encouraged to try to correct the interference by one or more of the following measures.Reorient or relocate the receiving antenna.

Increase the separation between the equipment and receiver. Connect the equipment into an outlet on a circuit different from that to which the receiver is connected Consult the dealer or an experienced radio/TV technician for help.

MAINTENANCE

WARNING: Poorly ventilated exhaust can **KILL.** Carefully follow ALL aspects of ventilation maintenance.

- Periodically inspect the electrical connections for loose connections and tighten if needed.
- Regularly check the fuel levels in the heater's fuel tank to make sure there's enough diesel to keep the heater running. If the fuel level is low, top off the tank with diesel while being careful to avoid overfilling.
- Clean the air filter regularly by removing it from the heater and gently tapping it against a hard surface to remove any loose debris. Using a clean cloth or brush, remove any smaller dirt or debris. Finally, reattach the air filter to the heater. It's recommended to clean the air filter every few months during normal use and more often in polluted areas or during heavy use.
- Check the fuel lines and connections for any signs of leaks, such as fuel spots on the floor or a strong diesel odor. If there are leaks, tighten the connections to prevent further leaks. If you are unsure how to tighten the connections, consult the seller.
- Check the exhaust pipe regularly for blockages, clearing and cleaning the line if needed.
- If the heater has not been used for a long period of time, it Is important to perform a test run before using it again. This will ensure that the heater is functioning properly and that there are no leaks or other issues that could cause harm. To perform a test run, turn on the heater and run it for a few minutes, observing the fuel and air levels, the temperature, and the exhaust pipe. If everything appears to be working properly, the heater is ready for use. If you notice any issues, such as dirty or broken components, clean or replace them as needed. For serious issues, seek assistance from the seller or licensed diesel heating technician.

TROUBLESHOOTING

When a fault occurs during operation, the control panel display will flash to display the error code.

Error Code	Possible Cause	Recommended Solution
E 01	Startup failure	1. Check if the oil pump works; 2. Check if the interfaces of the oil circuit are waxed or blocked.
E 02	Lack of oil and stalling	Check if the fuel tank is short of oil.
E 03	Abnormal voltage	1. If you use the DC 12/24V Power Cable to connect the heater, check if the power supply voltage is higher than32V or lower than 9V. 2. Check if the connecting of main wire harness comes loose.
E 04	Air outlet temperature sensor failure	1. Detecting whether the outlet air temperature sensor connector is loose and falsely connected. 2. Failure of the outlet air sensor, replace the main board. 3. Main board failure, replace the main board.
E 05	Inlet air temperature sensor failure	Inlet air sensor failure, replacement of the motherboard.
E 06	Abnormal oil pump	1. Check if the oil pump plug is loose or not connected firmly; 2. Check if there is an open circuit in the main harness; 3. If the oil pump fails,replace it.
E 07	Abnormal fan	1. Check if the fan impeller is stuck; 2. Check if the fan plug is loose or not connected firmly; 3. If the fan fails, replace it.

Error Code	Possible Cause	Recommended Solution
E 07	Abnormal fan	4. Check if the induction magnet of the wind wheel is missing or has incorrect polarity; 5. Check whether the motherboard wind speed sensor is normal; 6. If the motherboard fails, replace it.
E 08	Abnormal ignition plug	1. Check if the ignition plug is connected firmly; 2. If the ignition plug fails, replace the ignition plug; 3. If the motherboard fails, replace it.
E 09	Overheat protection	1. The furnace temperature sensor model is incorrect or faulty, replace the sensor; 2. If the motherboard fails, replace it.
E 10	Abnormal overheat protection sensor	1. Check if the temperature sensor connector is loose or not connected firmly; 2. If the sensor fails, please replace the motherboard; 3. If the motherboard fails,replace it.

WARRANTY INFORMATION

This 1-year limited warranty is extended to the original purchaser of this product and warrants against any defect in materials and workmanship under normal use and conditions, for a period of one year from the date of the original purchase, subject to the conditions and limitations outlined below.

This warranty is non-transferable to any subsequent owner of the product regardless of whether the product is transferred during the specified term of the warranty.

THIS LIMITED WARRANTY IS GIVEN TO THE PURCHASER IN LIEU OF ALL OTHER WARRANTIES, EXPRESSED OR IMPLIED, INCLUDING BUT NOT LIMITED TO THE WARRANTIES OF MERCHANTABILITY OF FITNESS FOR A PARTICULAR PURPOSE.

What Is Covered?

- TURBRO's warranty extends only to products purchased from authorized sellers that are subject to TURBRO's quality controls and have agreed to follow its quality controls.
- This warranty is limited to the repair or replacement of part(s) proved to be defective in material or workmanship after said defect is confirmed by the manufacturer's inspection.
- The manufacturer may, at its discretion, fully discharge all obligations with respect to this warranty by refunding the wholesale price of the defective part(s).

UPON THE EXPIRATION OF THIS WARRANTY, ALL SUCH LIABILITY WILL TERMINATE. NO OTHER WARRANTIES ARE EXPRESSED OR IMPLIED ANYMORE.

Some states do not allow limitations on how long an implied warranty lasts, so the above limitations may not apply to you.

What Is Not Covered?

- Damage or losses caused by any alterations or unauthorized repair made to the product by the owner.
- Damage or losses caused by accident, neglectful operation, misuse, abuse, or use contrary to the user manual and safety guidelines.
- Damage or losses occurring during commercial use, rental use, or any use for which the product is not intended.
- Damage or losses caused by improper or inadequate maintenance.
- Failure to perform general maintenance (including cleaning).
- Use of non-standard parts or accessories.
- Natural depreciation and normal wear and tear.

TURBRO SHALL NOT BE LIABLE FOR ANY INCIDENTAL OR CONSEQUENTIAL DAMAGES FOR BREACH OF ANY EXPRESS OR IMPLIED WARRANTY ON THIS PRODUCT, EXCEPT TO THE EXTENT PROHIBITED BY APPLICABLE LAW.

Some states do not allow the exclusion or limitation of incidental or consequential damages so the above limitation or exclusion may not apply to you.

How To Request Warranty Services?

To obtain the benefit of this warranty please leave a message online (www.turbro.com/contact), or send an email to support@turbro.com.

To express our gratitude to you for choosing us, we are giving you a 1-year warranty extension to the original 1-year manufacturer's limited warranty, extending the coverage period to two years in total.

- Complete the registration of your new product at https://www.turbro.com/warranty within 90 days from the date of package delivery (inclusive of the 90th day).
- Any registration beyond this stipulated period will be deemed invalid.
- The ultimate interpretation of the terms and conditions related to the extended warranty service rests solely with TURBRO.

If you discover that your product is defective within the specified warranty period, please contact our Customer Support via support@turbro.com.

- Order ID and invoice, or bill of sale should be provided. Such payment records must be kept to verify the purchase date and establish a warranty period.
- Model and issue description should be provided in detail, preferably with pictures and videos.
- DO NOT dispose of your product before contacting us.
- DO NOT return the product unless instructed by our customer service.
- The original carton should be kept in case of warranty return of the unit.

What Will TURBRO Do?

- Replace certain parts.
- Replace the item.
- Refund the item under certain circumstances.

In no event shall liability exceed the purchase price paid by the original purchaser of the product.

Any instructions or warranty included in this manual may be subject to change without notice. For the most up-to-date instructions and warranty information, please contact us via support@turbro.com.

TURBRO

support@turbro.com
www.turbro.com
(323) 438-3334

V20250805