Installation Instructions for *R9S96*U Ultra Low NOx Gas Furnace

(Type FSP CATEGORY IV Direct or Non Direct Vent Air Furnace)

(Type FSP CATÉGORIE IV Direct ou four á air soufflé non direct)

These furnaces comply with requirements embodied in the American National Standard/National Standard of Canada ANSI Z21.47·CSA-2.3 Gas Fired Central Furnaces.

Intertek

Installer:
Affix all manuals adjacent to the unit.

As a professional installer you have an obligation to know the product better than the customer. This includes all safety precautions and related items.

Prior to actual installation, thoroughly familiarize yourself with this Instruction Manual. Pay special attention to all safety warnings. Often during installation or repair it is possible to place yourself in a position which is more hazardous than when the unit is in operation.

Remember, it is your responsibility to install the product safely and to know it well enough to be able to instruct a customer in its safe use.

Safety is a matter of common sense...a matter of thinking before acting. Most dealers have a list of specific good safety practices...follow them.

The precautions listed in this Installation Manual are intended as supplemental to existing practices. However, if there is a direct conflict between existing practices and the content of this manual, the precautions listed here take precedence.

RECOGNIZE THIS SYMBOL AS A SAFETY PRECAUTION.

WARNING

ONLY PERSONNEL THAT HAVE BEEN TRAINED TO INSTALL, ADJUST, SERVICE, MAINTENANCE OR REPAIR (HEREINAFTER, "SERVICE") THE EQUIPMENT SPECIFIED IN THIS MANUAL SHOULD SERVICE THE EQUIPMENT.
THIS EQUIPMENT IS NOT INTENDED FOR USE BY PERSONS (INCLUDING CHILDREN) WITH REDUCED PHYSICAL, SENSORY OR MENTAL CAPABILITIES, OR LACK OF EXPERIENCE AND KNOWLEDGE, UNLESS THEY HAVE BEEN GIVEN SUPERVISION OR INSTRUCTION CONCERNING USE OF THE APPLIANCE BY A PERSON RESPONSIBLE FOR THEIR SAFETY.
CHILDREN SHOULD BE SUPERVISED TO ENSURE THAT THEY DO NOT PLAY WITH THE EQUIPMENT.
THE MANUFACTURER WILL NOT BE RESPONSIBLE FOR ANY INJURY OR PROPERTY DAMAGE ARISING FROM IMPROPER SUPERVISION, SERVICE OR SERVICE PROCEDURES. IF YOU SERVICE THIS UNIT, YOU ASSUME RESPONSIBILITY FOR ANY INJURY OR PROPERTY DAMAGE WHICH MAY RESULT. IN ADDITION, IN JURISDICTIONS THAT REQUIRE ONE OR MORE LICENSES TO SERVICE THE EQUIPMENT SPECIFIED IN THIS MANUAL, ONLY LICENSED PERSONNEL SHOULD SERVICE THE EQUIPMENT. IMPROPER SUPERVISION, INSTALLATION, ADJUSTMENT, SERVICING, MAINTENANCE OR REPAIR OF THE EQUIPMENT SPECIFIED IN THIS MANUAL, OR ATTEMPTING TO INSTALL, ADJUST, SERVICE OR REPAIR THE EQUIPMENT SPECIFIED IN THIS MANUAL WITHOUT PROPER SUPERVISION OR TRAINING MAY RESULT IN PRODUCT DAMAGE, PROPERTY DAMAGE, PERSONAL INJURY OR DEATH.

WARNING

Do not bypass safety devices.

WARNING

This furnace may be paired with a cooling unit that uses R-32 refrigerant. If the cooling unit paired with this furnace does not use R-32, the R-32 function control board needs to be turned off. Please see the electrical and the R-32 sections for more details. Refrigerant systems other than 410A or R32 may require an additional mitigation control board. Refer to the installation manual of the indoor evaporator coil to determine installation requirements for that supplier's refrigerant detection system.

90% HEX

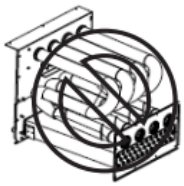

DO NOT LIFT PRODUCT USING HEAT EXCHANGER

19001 Kermier Rd., Waller, TX 77484
www.goodmanmfg.com • www.amana-hac.com
© 2024-2025 Daikin Comfort Technologies Manufacturing, L.P.
Amana is a registered trademark of Maytag Corporation or its related companies and is used under license. All rights reserved.

IOG-2040C
01/2025

Table of Contents

Safety Considerations 2
Product Application 5
Location Requirements & Considerations 5
Combustion & Ventilation Air Requirements 7
Installation Positions 8
Horizontal Applications & Considerations 8
Vent Pipe & Combustion Air Pipe 10
Condensate Drain Lines & Drain Trap 17
Electrical Connections 20
Gas Supply and Piping 22
Circulating Air & Filters 24
R32 Function 26
Start-up Procedure & Adjustment 27
Normal Sequence of Operation 33
Operational Checks 34
Safety Circuit Description 34
Troubleshooting 35
Maintenance 36
Filters 36
Before leaving an installation 37
Repair and Replacement Parts 37
Troubleshooting Chart 38
Airflow Tables 41
Wiring Diagram 43
Start-Up Check List 44

SAFETY CONSIDERATIONS

IMPORTANT NOTE: This unit is designed to meet the NOX requirement of 14Ng/J maximum as required by the South Coast Air Quality Management District and the San Joaquin Valley Air Pollution Control District, both in the State of California, and is intended for installation in those districts only.

This unit has a Control System that compensates for certain installation and environmental conditions. This unit must:

- Be properly installed, operated, and maintained per the instructions.
- Be serviced only by properly trained service technicians.

This unit is not approved for use with gases other than Natural Gas.

Units that are not installed, maintained, or operated properly may result in “noisy” operation during the heating cycle. If this unit is making unusual or objectionable noises during the heating cycle, turn the heat off at the thermostat and contact a qualified service organization right away.

Adhere to the following warnings and cautions when installing, adjusting, altering, servicing, or operating the furnace. To ensure proper installation and operation, thoroughly read this manual for specifics pertaining to the installation and application of this product.

This furnace is manufactured for use with natural gas only. Install this furnace only in a location and position as specified in **LOCATION REQUIREMENTS & CONSIDERATIONS** section and **INSTALLATION POSITIONS** section of this manual.

Provide adequate combustion and ventilation air to the furnace as specified in **COMBUSTION & VENTILATION AIR REQUIREMENTS** section of this manual.

Combustion products must be discharged to the outdoors. Connect this furnace to an approved vent system only, as specified in **VENT/FLUE PIPE & COMBUSTION AIR PIPE** section of this manual.

Never test for gas leaks with an open flame. Use a commercially available soap solution made specifically for the detection of leaks to check all connections, as specified in **GAS SUPPLY AND PIPING** section of this manual.

Always install a furnace to operate within the furnace’s intended temperature-rise range with a duct system which has external static pressure within the allowable range, as specified on the furnace rating plate and **OPERATIONAL CHECKS** section of these instructions.

When a furnace is installed so that supply ducts carry air circulated by the furnace to areas outside the space containing the furnace, the return air shall also be handled by duct(s) sealed to the furnace casing and terminating outside the space containing the furnace.

A gas-fired furnace for installation in a residential garage must be installed as specified in the **LOCATION REQUIREMENTS AND CONSIDERATIONS** section of this manual.

This furnace cannot be used as a construction site heater.

CAUTION

FROZEN AND BURST WATER PIPE HAZARD
Failure to protect against the risk of freezing may result in property damage. Special precautions MUST be made if installing in an area which may drop below freezing. This can cause improper operation or damage to equipment. If the furnace environment has the potential of freezing, the drain trap and drain line must be protected. The use of electric heat tape and/or pipe insulation is recommended for these installations.

WARNING

To prevent personal injury or death due to improper installation, adjustment, alteration, service or maintenance, refer to this manual. For additional assistance or information, consult a qualified installer, servicer agency or the gas supplier.

WARNING

To prevent possible property damage, personal injury or death due to electrical shock, the furnace must be located to protect the electrical components from water.

Drain trap must be primed at time of installation. Trap is internally partitioned; add water to both inlet ports until water appears at both sides of the outlet opening. Failure to prime trap at time of installation may have a negative effect on combustion quality and pressure switch action.

WARNING

Heating unit should not be utilized without reasonable, routine, inspection, maintenance and supervision. If the building in which any such device is located will be vacant, care should be taken that such device is routinely inspected, maintained and monitored. In the event that the building may be exposed to freezing temperatures and will be vacant, all water-bearing pipes should be drained. The building should be properly winterized and the water source closed. In the event that the building may be exposed to freezing temperatures and will be vacant, any hydronic coil units should be drained as well and, in such case, alternative heat sources should be utilized.

WARNING

If the information in these instructions is not followed exactly, a fire or explosion may result causing property damage, personal injury or loss of life.
- do not store or use gasoline or other flammable vapors and liquids in the vicinity of this or any other appliance.
- WHAT TO DO IF YOU SMELL GAS:
  - Do not try to light any appliance.
  - Do not touch any electrical switch; do not use any phone in your building.
  - Immediately call your gas supplier from a neighbor's phone. Follow the gas supplier's instructions. If you cannot reach your gas supplier, call the fire department.
- Installation and service must be performed by a qualified installer, service agency or the gas supplier.

WARNING

Should overheating occur or the gas supply fail to shut off, turn off the manual gas shutoff valve external to the furnace before turning of the electrical supply.

AVERTISSEMENT

RISQUE D'INCENDIE OU D'EXPLOSION
Si les consignes de sécurité ne sont pas suivies à la lettre,cela peut entraîner la mort, de graves blessures ou des dommages matériels.
– Ne pas entreposer ni utiliser d'essence ni autres vapeurs ou liquides inflammables à proximité de cet appareil ou de tout autre appareil.
– QUE FAIRE SI UNE ODEUR DE GAZ EST DÉTECTÉE
  - Ne mettre en marche aucun appareil.
  - Ne toucher aucun interrupteur électrique; ne pas utiliser de téléphone dans le bâtiment.
  - Quitter le bâtiment immédiatement.
  - Appeler immédiatement le fournisseur de gaz en utilisant le téléphone d'un voisin. Suivre les instructions du fournisseur de gaz.
  - Si le fournisseur de gaz n'est pas accessible, appeler le service d'incendie.
– L'installation et l'entretien doivent être effectués par un installateur ou une entreprise d'entretien qualifié, ou le ournisseur de gaz.

WARNING

Possibility property damage, personal injury or death due to fire, explosion, smoke, soot, condensation, electrical shock or carbon monoxide may result from improper installation, repair operation, or maintenance of this product.

WARNING

FIRE OR EXPLOSION HAZARD

Failure to follow the safety warnings exactly could result in serious injury, death or property damage.

Never test for gas leaks with an open flame.
Use a commercially available soap solution made specifically for the detection of leaks to check all connections.
A fire or explosion may result causing property damage, personal injury or loss of life.

AVERTISSEMENT

RISQUE D'INCENDIE OU D'EXPLOSION

Si les consignes de sécurité ne sont pas suivies à la lettre, cela peut entraîner la mort, de graves blessures ou des dommages matériels.

Ne jamais vérifier la présence de fuites de gaz au moyen d'une flamme nue. Vérifier tous les raccords en utilisant une solution savonneuse commerciale conçue spécialement pour la détection de fuites. Un incendie ou une explosion risque de se produire, ce qui peut entraîner la mort, des blessures ou des dommages matériels.

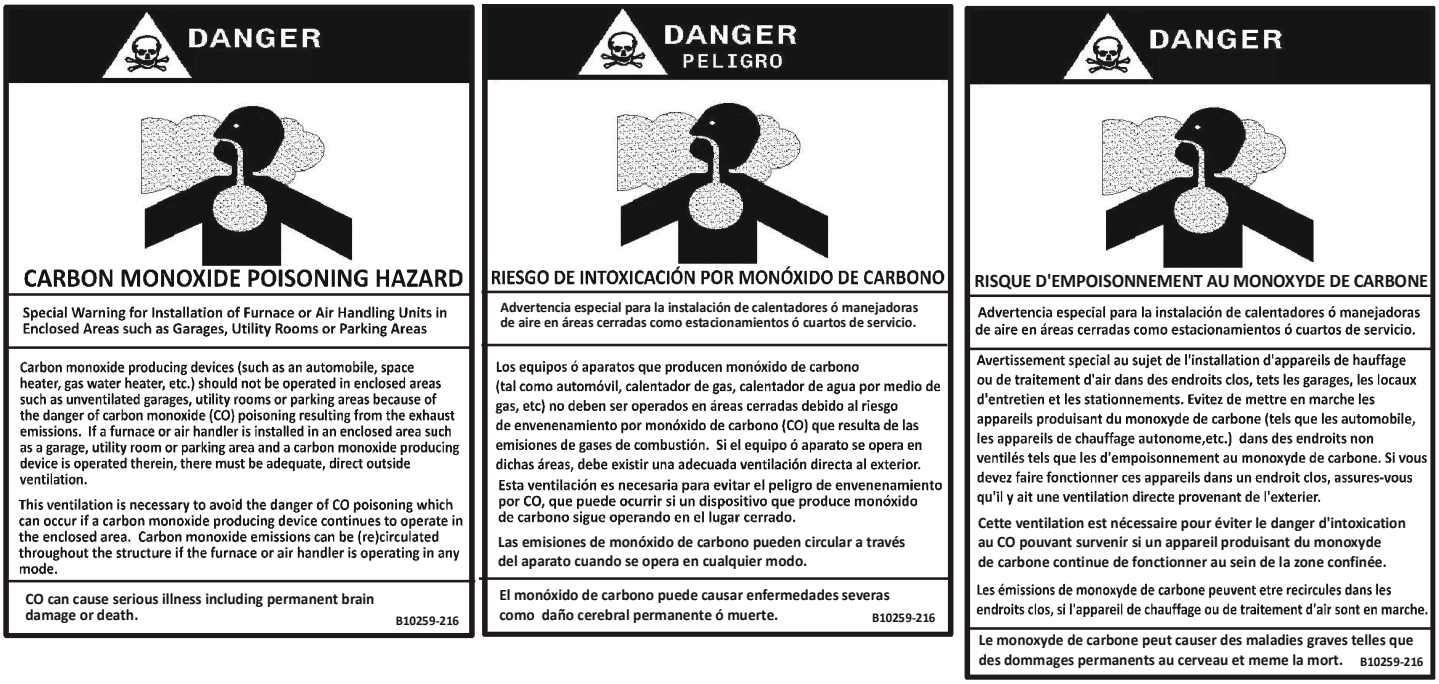

Shipping Inspection

All units are securely packed in shipping containers tested according to International Safe Transit Association specifications. The carton must be checked upon arrival for external damage. If damage is found, a request for inspection by the carrier's agent must be made in writing immediately.

The furnace must be carefully inspected on arrival for damage and bolts or screws which may have come loose in transit. In the event of damage the consignee should:

1. Make a notation on delivery receipt of any visible damage to shipment or container.
2. Notify the carrier promptly and request an inspection.
3. With concealed damage, the carrier must be notified as soon as possible - preferably within five days.
4. File the claim with the following support documents within a nine-month statute of limitations.
   - Original or certified copy of the Bill of Lading, or indemnity bond.
   - Original paid freight bill or indemnity in lieu thereof.
   - Original or certified copy of the invoice, showing trade and other discounts or reductions.
   - Copy of the inspection report issued by the carrier's representative at the time damage is reported to carrier.

Electrostatic Discharge (ESD) Precautions

NOTE: Discharge your body's static electricity before touching unit. An electrostatic discharge can adversely affect electrical components.

Use the following precautions during furnace installation and servicing to protect the integrated control module from damage. By putting the furnace, the control, and the person at the same electrostatic potential, these steps will help avoid exposing the integrated control module to electrostatic discharge. This procedure is applicable to both installed and non-installed (ungrounded) furnaces.

1. Disconnect all power to the furnace. Do not touch the integrated control module or any wire connected to the control prior to discharging your body's electrostatic charge to ground.
2. Firmly touch a clean, unpainted, metal surface of the furnace near the control. Any tools held in a person's hand during grounding will be discharged.
3. Service integrated control module or connecting wiring following the discharge process in step 2. Use caution not to recharge your body with static electricity; (i.e., do not move or shuffle your feet, do not touch ungrounded objects, etc.). If you come in contact with an ungrounded object, repeat step 2 before touching control or wires.
4. Discharge your body to ground before removing a new control from its container. Follow steps 1 through 3 if installing the control on a furnace. Return any old or new controls to their containers before touching any ungrounded object.

To The Installer

Before installing this unit, please read this manual thoroughly to familiarize yourself with specific items which must be adhered to, including but not limited to: unit maximum external static pressure, gas pressures, BTU input rating, proper electrical connections, circulating air temperature rise, minimum or maximum CFM, and motor speed connections.

⚠ WARNING

To prevent property damage, personal injury or death due to fire, do not install this furnace in a mobile home, trailer, or recreational vehicle.

NOTE: This unit should be installed in a manner so that it is not accessible to the public.

PRODUCT APPLICATION

This furnace is primarily designed for residential home-heating applications. It is NOT designed or certified for use in mobile homes, trailers or recreational vehicles. Neither is it designed or certified for outdoor applications. The furnace **must** be installed indoors (i.e., attic space, crawl space, or garage area provided the garage area is enclosed with an operating door).

This furnace can be used in the following non-industrial commercial applications:

Schools, Office buildings, Churches, Retail stores, Nursing homes, Hotels/motels, Common or office areas.

In such applications, the furnace must be installed with the following stipulations:

- It must be installed per the installation instructions provided and per local and national codes.
- It must be installed indoors in a building constructed on site.
- It must be part of a ducted system and not used in a free air delivery application.
- It must not be used as a “make-up” air unit.
- It must be installed as a two-pipe system for combustion air.
- All other warranty exclusions and restrictions apply This furnace is an ETL certified appliance and is appropriate for use with natural gas.

Dual certification means that the combustion air inlet pipe is optional and the furnace can be vented as a:

- Non-direct vent (single pipe) central forced air furnace in which combustion air is taken from the installation area or from air ducted from the outside or,
- Direct vent (dual pipe) central forced air furnace in which all combustion air supplied directly to the furnace burners through a special air intake system outlined in these instructions.

This furnace cannot be used as a construction site heater.

To ensure proper furnace operation, install, operate and maintain the furnace in accordance with these installation and operation instructions, all local building codes and ordinances. In their absence, follow the latest edition of the National Fuel Gas Code (NFPA 54/ANSI Z223.1), Installation Codes, local plumbing or wastewater codes, and other applicable codes.

A copy of the National Fuel Gas Code (NFPA 54/ANSI Z223.1) can be obtained from any of the following:

American National Standards Institute
23 West 43rd Street, 4th Floor
New York, NY 10036

National Fire Protection Association
1 Batterymarch Park
Quincy, MA 02169-7471

CSA International
8501 East Pleasant Valley
Independence, OH 441311

The rated heating capacity of the furnace should be greater than or equal to the total heat loss of the area to be heated. The total heat loss should be calculated by an approved method or in accordance with “ASHRAE Guide” or “Manual J-Load Calculations” published by the Air Conditioning Contractors of America.

LOCATION REQUIREMENTS & CONSIDERATIONS

Follow the instructions listed below and the guidelines provided in the *Combustion and Ventilation Air Requirements* section when selecting a furnace location.

WARNING

To prevent possible equipment damage, property damage, personal injury or death, the following bullets points must be observed when installing this unit.

WARNING

Possible property damage, personal injury or death due to fire, explosion, smoke, soot, condensation, electrical shock or carbon monoxide may result from improper installation, repair operation, or maintenance of this product.

- Centrally locate the furnace with respect to the proposed or existing air distribution system.
- Ensure the temperature of the return air entering the furnace is between 55°F and 100°F when the furnace is heating.
- Provide provisions for venting combustion products outdoors through a proper venting system. Special consideration should be given to vent/flue pipe routing and combustion air intake pipe when applicable. Refer to *Vent/Flue Pipe and Combustion Air Pipe -Termination Locations* for appropriate termination locations and to determine if the piping system from furnace to termination can be accomplished within the guidelines given. **NOTE:** The length of flue and/or combustion air piping can be a limiting factor in the location of the furnace.
- Locate the furnace so condensate flows downwards to the drain. Do not locate the furnace or its

condensate drainage system in any area subject to below freezing temperatures without proper freeze protection. Refer to *Condensate Drain Lines and Trap* for further details.

- Ensure adequate combustion air is available for the furnace. Improper or insufficient combustion air can expose building occupants to gas combustion products that could include carbon monoxide. Refer to *Combustion and Ventilation Air Requirements.*
- Set the furnace on a level floor to enable proper condensate drainage. If the floor becomes wet or damp at times, place the furnace above the floor on a concrete base sized approximately 1-½" larger than the base of the furnace. Refer to the *Horizontal Applications and Considerations* for leveling of horizontal furnaces.
- Ensure upflow or horizontal furnaces are not installed directly on carpeting, or any other combustible material. The only combustible material allowed is wood.
- Exposure to contaminated combustion air will result in safety and performance-related problems. Do not install the furnace where the combustion air is exposed to the following substances:
  Permanent wave solutions
  Chlorinated waxes or cleaners chlorine-based
  Carbon tetrachloride
  Water softening chemicals
  Swimming pool chemicals
  Deicing salts or chemicals
  Halogen type refrigerants
  Printing inks
  Cleaning solutions (such as perchloroethylene)
  Paint removers
  Varnishes
  Hydrochloric acid
  Cements and glues
  Antistatic fabric softeners for clothes dryers
  Masonry acid washing materials
- Seal off a *non-direct vent* furnace if it is installed near an area frequently contaminated by any of the above substances. This protects the *non-direct vent* furnace from airborne contaminants. To ensure that the enclosed *non-direct vent* furnace has an adequate supply of combustion air, vent from a nearby uncontaminated room or from outdoors. Refer to the *Combustion and Ventilation Air Requirements* for details.
- If the furnace is used in connection with a cooling coil unit, install the furnace upstream of the cooling coil.
- A coil installed above an upflow furnace may be the same width as the furnace or may be one size larger than the furnace. *Example: a "C" width coil may be installed with a "B" width furnace.*
- **For all applications, the front of the coil and furnace must face the same direction.**
- If the furnace is installed in a residential garage, position the furnace so that the burners and ignition source are located not less than 18" above the floor. Protect the furnace from physical damage by vehicles.
- If the furnace is installed horizontally, ensure the access doors are not on the "up/top" or "down/bottom" side of the furnace.
- Do not connect this furnace to a chimney flue that serves a separate appliance designed to burn solid fuel.

Clearances and Accessibility

Clearances shall be in accordance with local installation codes, the requirements of the gas supplier and the manufacturer's installation instructions.

Dégaugement conforme aux dodes d'installation locaux, aux exigences du fournisseur de gaz et aux instructions d'installation du fabricant.

NOTES:

- For servicing or cleaning, a 24" front clearance is required.
- Unit connections (electrical, flue and drain) may necessitate greater clearances than the minimum clearances listed above.
- In all cases, accessibility clearance must take precedence over clearances from the enclosure where accessibility clearances are greater.

***R9S96 MINIMUM CLEARANCES TO COMBUSTIBLE MATERIALS (INCHES)**

POSITION*	SIDES	REAR	FRONT	BOTTOM	FLUE	TOP
Upflow	0"	0"	3"	C	0"	1"
Horizontal	6"	0"	3"	C	0"	6"

C = If placed on combustible floor, floor MUST be wood only.

Table 1

Installations must adhere to the clearances to combustible materials to which this furnace has been design certified. The minimum clearance information for this furnace is provided on the unit's clearance label. These clearances must be permanently maintained. Clearances must also accommodate an installation's gas, electrical, and drain trap and drain line connections. If the alternate combustion air intake or vent/flue connections are used additional clearance must be provided to accommodate these connections. Refer to *Vent/Flue Pipe and Combustion Air Pipe* for details.

A furnace installed in a confined space (i.e., a closet or utility room) must have two ventilation openings with a total minimum free area of 0.25 square inches per 1,000 BTU/hr of furnace input rating. Refer to Specification Sheet applicable to your model for minimum clearances to combustible surfaces. One of the ventilation openings must be within 12" of the top; the other opening must be within 12" of the bottom of the confined space. In a typical construction, the clearance between the door and door frame is usually adequate to satisfy this ventilation requirement.

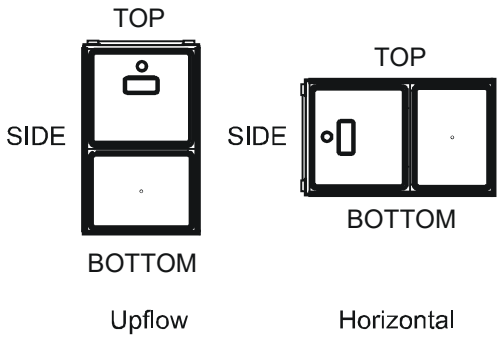

FIGURE 1

EXISTING FURNACE REMOVAL

NOTE: WHEN AN EXISTING FURNACE IS REMOVED FROM A VENTING SYSTEM SERVING OTHER APPLIANCES, THE VENTING SYSTEM MAY BE TOO LARGE TO PROPERLY VENT THE REMAINING ATTACHED APPLIANCES.

The following vent testing procedure is reproduced from the American National Standard/National Standard of Canada for Gas-Fired Central Furnaces ANSI Z21.47, CSA-2.3 latest edition Section 1.23.1.

The following steps shall be followed with each appliance connected to the venting system placed in operation, while any other appliances connected to the venting system are not in operation:

1. Seal any unused openings in the venting system.
2. Inspect the venting system for proper size and horizontal pitch, as required by the National Fuel Gas Code, ANSI Z223.1 instructions. Determine that there is no blockage or restriction, leakage, corrosion and other deficiencies which could cause an unsafe condition.
3. As far as practical, close all building doors and windows and all doors between the space in which the appliance(s) connected to the venting system are located and other spaces of the building.
4. Close fireplace dampers.
5. Turn on clothes dryers and any appliance not connected to the venting system. Turn on any exhaust fans, such as range hoods and bathroom exhausts, so they shall operate at maximum speed. Do not operate a summer exhaust fan.
6. Follow the lighting instructions. Place the appliance being inspected in operation. Adjust thermostat so appliance shall operate continuously.
7. Test for spillage from draft hood appliances at the draft hood relief opening after 5 minutes of main burner operation. Use the flame of a match or candle.
8. If improper venting is observed during any of the above tests, the venting system must be corrected in accordance with the National Fuel Gas Code ANSI Z223.1/NFPA 54.
9. After it has been determined that each appliance connected to the venting system properly vents when tested as outlined above, return doors, windows, exhaust fans, fireplace dampers and any other gas burning appliance to their previous conditions of use.

If resizing is required on any portion of the venting system, use the appropriate table in the latest edition of the National Fuel Gas Code ANSI Z223.1 Installation Codes.

THERMOSTAT LOCATION

The thermostat should be placed approximately five feet from the floor on a vibration-free, inside wall in an area having good air circulation. Do not install the thermostat where it may be influenced by any of the following:

- Drafts, or dead spots behind doors, in corners, or under cabinets.
- Hot or cold air from registers.
- Radiant heat from the sun.
- Light fixtures or other appliances.
- Radiant heat from a fireplace.
- Concealed hot or cold water pipes, or chimneys.
- Unconditioned areas behind the thermostat, such as an outside wall.

Consult the instructions packaged with the thermostat for mounting instructions and further precautions.

COMBUSTION & VENTILATION AIR REQUIREMENTS

WARNING

TO AVOID PROPERTY DAMAGE, PERSONAL INJURY OR DEATH, SUFFICIENT FRESH AIR FOR PROPER COMBUSTION AND VENTILATION OF FLUE GASES MUST BE SUPPLIED. MOST HOMES REQUIRE OUTSIDE AIR BE SUPPLIED INTO THE FURNACE AREA.

Improved construction and additional insulation in buildings have reduced heat loss by reducing air infiltration and escape around doors and windows. These changes have helped in reducing heating/cooling costs but have created a problem supplying combustion and ventilation air for gas fired and other fuel burning appliances. Appliances that pull air out of the house (clothes dryers, exhaust fans, fireplaces, etc.) increase the problem by starving appliances for air.

House depressurization can cause back drafting or improper combustion of gas-fired appliances, thereby exposing building occupants to gas combustion products that could include carbon monoxide.
If this furnace is to be installed in the same space with other gas appliances, such as a water heater, ensure there is an adequate supply of combustion and ventilation air for all appliances. Refer to the latest edition of the National Fuel Gas Code NFPA 54/ANSI Z223.1 or applicable provisions of the local building codes for determining the combustion air requirements for the appliances.

Most homes will require outside air be supplied to the furnace area by means of ventilation grilles or ducts connecting directly to the outdoors or spaces open to the outdoors such as attics or crawl spaces.

INSTALLATION POSITIONS

This furnace may be installed in an upright position or horizontal on either the left or right side panel. Do not install this furnace on its back. For *upright upflow* furnaces, return air ductwork may be attached to the side panel(s) and/or basepan. For *horizontal upflow* furnaces, return air ductwork must be attached to the basepan. For both *upright or horizontal* furnaces, return ductwork must be attached to the basepan (top end of the blower compartment). **NOTE:** Ductwork must never be attached to the back of the furnace. Contact your distributor for proper airflow requirements and number of required ductwork connections. Refer to "Recommended Installation Positions" figure for appropriate installation positions, ductwork connections, and resulting airflow arrangements.

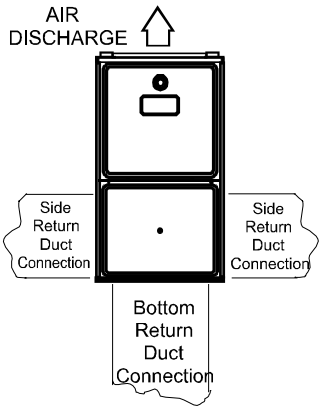

UPFLOW
UPRIGHT
ALTERNATE VENT/FLUE LOCATION
FIGURE 2A

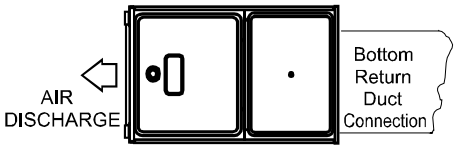

UPFLOW HORIZONTAL
LEFT AIR DISCHARGE
FIGURE 2B

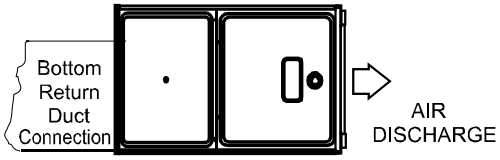

UPFLOW HORIZONTAL
RIGHT AIR DISCHARGE
FIGURE 2C
RECOMMENDED INSTALLATION POSITIONS

Auxiliary Drain Pan

An auxiliary/secondary drain pan should be installed under a condensing furnace and/or indoor coil when any potential leakage could cause damage to ceilings, floors or other areas below the installation location. The auxiliary drain pan should be at least 1-1/2 inches deep, 3 inches larger than the unit and constructed of corrosion-resistant material. The drain pan should have a drain line connected to the pan and the drain line should be pitched downward away from the pan a minimum of 1/8" per foot of drain line. The drain line should terminate in a location where the water dripping from the drain line will alert the occupant that a problem exists. The auxiliary drain pan should also be equipped with a water level detection device conforming to UL 508 that will shut off the equipment served prior to overflow of the pan.

For upflow and horizontal installations, the furnace and/or indoor coil should be installed so that the equipment is at least 1-1/2 inches above the drain pan. Do not install the furnace and/or indoor coil directly into the auxiliary/secondary drain pan and do not use any wood product in the drain pan to elevate the furnace. Bricks, 2-inch concrete cap blocks, metal furnace stands, or furnace blocks can be used to elevate the furnace. For an upflow furnace installation, seal the entire bottom of the furnace before setting the furnace at least 1-1/2 inches above the drain pan.

Failure to properly install an auxiliary/secondary drain pan for a furnace and/or indoor coil can result in water damage to components and the furnace's metal cabinet.

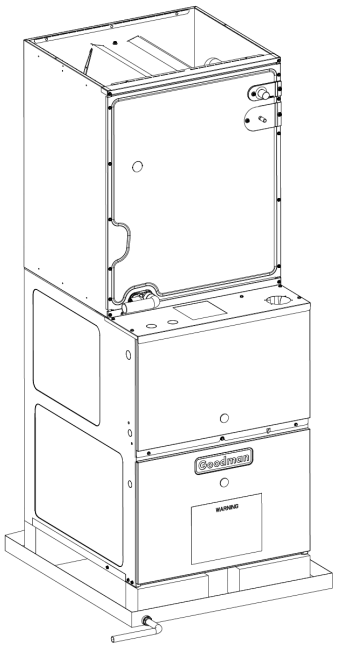

HORIZONTAL APPLICATIONS & CONSIDERATIONS

When installing a furnace horizontally, additional consideration must be given to the following:

Furnace Suspension

If suspending the furnace from rafters or joists, use ⅜" threaded rod and 2"x2"x⅜" angle iron as shown in the following diagram. The length of rod will depend on the application and the clearances necessary.

If the furnace is installed in a crawl space it must be suspended from the floor joist or supported by a concrete pad. Never install the furnace on the ground or allow it to be exposed to water.

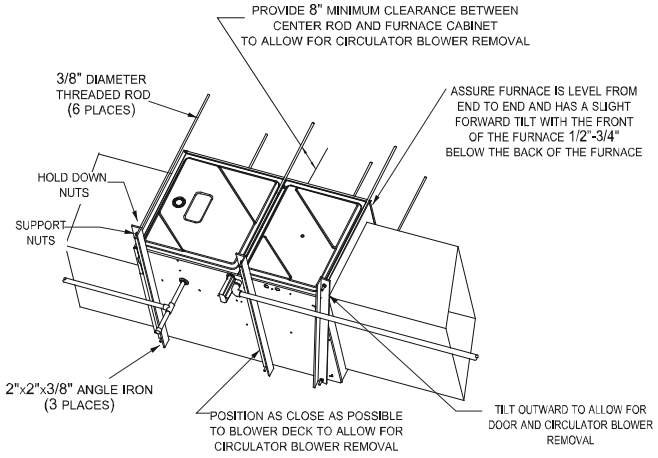

Figure 3

WARNING

CARBON MONOXIDE POISONING HAZARD

Failure to follow the steps outlined below for each appliance connected to the venting system being placed into operation could result in carbon monoxide poisoning or death.

The following steps shall be followed with each appliance connected to the venting system placed in operation, while any other appliances connected to the venting system are not in operation:

1. **Seal any unused openings in the venting system.**
2. **Inspect the venting system for proper size and horizontal pitch, as required by the National Fuel Gas Code, ANSI Z223.1 or the Natural Gas and Propane Installation Code, CSA B149.1-15 and these instructions. Determine that there is no blockage or restriction, leakage, corrosion and other deficiencies which could cause an unsafe condition.**
3. **As far as practical, close all building doors and windows and all doors between the space in which the appliance(s) connected to the venting system are located and other spaces of the building.**
4. **Close fireplace dampers.**
5. **Turn on clothes dryers and any appliance not connected to the venting system. Turn on any exhaust fans, such as range hoods and bathroom exhausts, so they shall operate at maximum speed. Do not operate a summer exhaust fan.**
6. **Follow the lighting instructions. Place the appliance being inspected in operation. Adjust thermostat so appliance shall operate continuously.**
7. **Test for spillage from draft hood appliances at the draft hood relief opening after 5 minutes of main burner operation. Use the flame of a match or candle.**
8. **If improper venting is observed during any of the above tests, the venting system must be corrected in accordance with the National Fuel Gas Code ANSI Z223.1/NFPA 54 and/or National Gas and Propane Installation Code CSA B149.1-15.**
9. **After it has been determined that each appliance connected to the venting system properly vents when tested as outlined above, return doors, windows, exhaust fans, fireplace dampers and any other gas burning appliance to their previous conditions of use.**

AVERTISSEMENT

RISQUE D'INTOXICATION AU MONOXYDE DE CARBONE

Si les étapes décrites ci-dessous ne sont pas suivies pour chacun des appareils raccordés au système de ventilation au moment de sa mise en marche, cela peut entraîner une intoxication au monoxyde de carbone ou la mort. Les étapes suivantes doivent être suivies pour chacun des appareils raccordés au système de ventilation au moment de sa mise en marche, alors que tous les autres appareils raccordés au système de ventilation ne sont pas en marche :

1. **Sceller toutes les ouvertures inutilisées du système de ventilation.**
2. **Inspecter le système de ventilation afin de vérifier si la taille et l'inclinaison par rapport à l'horizontale sont conformes aux exigences du National Fuel Gas Code, ANSI Z223.1/NFPA 54 ou du Code d'installation du gaz naturel et du propane, CSA B149.1 et à ces instructions. Vérifier qu'il n'y a pas d'obstruction ou de restriction, de fuite, de corrosion et d'autres problèmes qui pourraient entraîner une situation dangereuse.**
3. **Si possible, fermer toutes les portes et fenêtres du bâtiment ainsi que toutes les portes séparant l'endroit où se trouvent les appareils raccordés au système de ventilation et les autres zones du bâtiment.**
4. **Fermer le registre des foyers.**
5. **Mettre les sécheuses en marche ainsi que tous les autres appareils qui ne sont pas raccordés au système de ventilation. Mettre en marche tous les ventilateurs de tirage, comme celui des hottes de cuisine et des salles de bains, et les régler à la puissance maximale. Ne pas mettre en marche les ventilateurs d'été.**
6. **Suivre les instructions d'allumage. Mettre en marche l'appareil soumis à l'inspection. Régler le thermostat de manière à ce que l'appareil fonctionne en continu.**
7. **Vérifier la présence de fuite au niveau de l'ouverture du coupe-tirage des appareils qui en sont dotés après 5 minutes de fonctionnement du brûleur principal. Utiliser la flamme d'une allumette ou d'une bougie.**
8. **Si un problème de ventilation est observé pendant l'un des essais décrits ci-dessus, des correctifs doivent être apportés au système de ventilation conformément au National Fuel Gas Code, ANSI Z223.1/NFPA 54 et (ou) au Code d'installation du gaz naturel et du propane, CSA B149.1.**
9. **Une fois qu'il a été déterminé que chaque appareil raccordé au système de ventilation fonctionne correctement au moyen des essais décrits ci-dessus, les portes, les fenêtres, les ventilateurs, les registres de foyer et tous les autres appareils de combustion alimentés au gaz doivent être remis dans leur état initial.**

Front Cover Pressure Switch Tube Location

When a furnace is installed horizontally with left side down, the front cover pressure switch tube must be re-located to the lower port of the collector box cover.

1. Remove tube from front cover pressure switch and collector box cover.
2. Remove rubber plug from bottom collector box port and install on top collector box port.
3. Locate 24" x ¼" tube in bag assembly.
4. Install one end on front cover pressure switch.
5. Route tube to lower port on collector box cover and cut off excess tubing.

Drain Trap and Lines

In horizontal applications the condensate drain trap is secured to the furnace side panel, suspending it below the furnace. A minimum clearance of 5.5" below the furnace must be provided for the drain trap. Additionally, the appropriate downward piping slope must be maintained from the drain trap to the drain location. Refer to *Condensate Drain Trap and Lines* for further details. If the drain trap and drain line will be exposed to temperatures near or below freezing, adequate measures must be taken to prevent condensate from freezing.

Leveling

Leveling ensures proper condensate drainage from the heat exchanger. For proper flue pipe drainage, the furnace must be level lengthwise from end to end. The furnace should have a slight tilt from back to front with the access doors downhill from the back panel approximately ½" to ¾". The slight tilt allows the heat exchanger condensate, generated in the secondary heat exchanger, to flow forward to the secondary heat exchanger front cover.

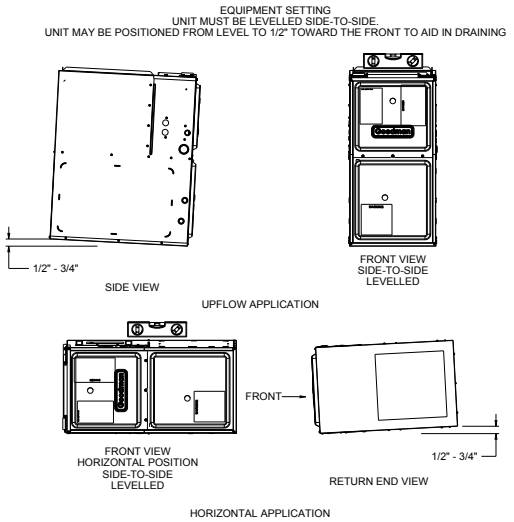

Alternate Electrical and Gas Line Connections

This furnace has provisions allowing for electrical and gas line connections through either side panel. In horizontal applications the connections can be made either through the "top" or "bottom" of the furnace.

Drain Pan

A drain pan must be provided if the furnace is installed above a conditioned area. The drain pan must cover the entire area under the furnace (and air conditioning coil if applicable).

Freeze Protection

Refer to *Horizontal Applications and Conditions - Drain Trap and Lines.*

VENT PIPE & COMBUSTION AIR PIPE

This manual will refer to the pipe that discharges products of combustion to the outdoors as the “vent” pipe or “flue” pipe. The pipe that supplies air for combustion to the furnace will be referred to as the “intake” pipe or “combustion air” pipe.

This furnace is dual certified and may be installed as a non-direct vent (single pipe) or direct vent (dual pipe) appliance.

WARNING

Upon completion of the furnace installation, carefully inspect the entire flue system both inside and outside of the furnace to assure it is properly sealed. Leaks in the flue system can result in serious personal injury or death due to exposure to flue products, including carbon monoxide.

WARNING

Failure to follow these instructions can result in bodily injury or death. Carefully read and follow all instructions given in this section.

WARNING

To avoid bodily injury, fire or explosion, solvent cements must be kept away from all ignition sources (i.e., sparks, open flames, and excessive heat) as they are combustible liquids. Avoid breathing cements vapors or contact with skin and/or eyes.

Materials

PVC, CPVC, or ABS pipe & fittings are typically used as venting and intake pipe materials. All 90° elbows must be medium or long radius types. A medium radius elbow should measure ~3-1⁄16” minimum from the plane of one opening to the center line of the other opening for 2” diameter pipe, and ~4-9⁄16” minimum for 3” pipe.
In addition to these materials, Innoflue® by Centrotherm Eco Systems is also an approved vent and combustion air materials for installations in the U.S.A. Manufacturers Installation instructions for these products must be followed. These products have specific instructions for installing, joining and terminating. Do not mix materials or components of one manufacturer with materials or components of another manufacturer. Refer to the following chart for plastic pipe & fittings specifications

VENTING MATERIAL REQUIREMENTS	
PVC	ASTM STANDARD
SCHEDULE 40 PIPE	D1785
SDR 21 or 26 PIPE	D2241
SYSTEM 1738® (IPEX)	D1784, UL 1738
SCHEDULE 40 FITTINGS	D2466
SYSTEM 1738® FITTINGS	D1784, UL 1738
ABS	
SCHEDULE 40 PIPE	D1527
SCHEDULE 40 FITTINGS	D2468
CPVC	
SCHEDULE 40 PIPE	F441
SDR 21 or 26 PIPE	F442
FITTINGS	F438
POLYPROPYLENE	
INNOFLUE® (CENTROTHERM)	UL 1738
POLYPRO® (DURAVENT)	ULC S636
PRIMER & SOLVENT CEMENT	
PVC PRIMER	F656
CPVC PRIMER	F656
PVC SOLVENT CEMENT	D2564
CPVC SOLVENT CEMENT	F493
ABS SOLVENT CEMENT	D2235
ABS / PVC / CPVC ALL PURPOSE CEMENT (FOR PIPE & FITTINGS OF THE SAME MATERIAL)	D2564, D2235, F493
TRANSITION CEMENT FOR ABS to PVC or CPVC	D3188
INSTALLATIONS IN CANADA	
PVC & CPVC PIPE & FITTINGS	ULC S636
PVC & CPVC SOLVENT CEMENT	
TRANSITION CEMENT	
INNOFLUE® (CENTROTHERM)	
POLYPRO® (DURAVENT)	
SYSTEM 636® (IPEX)	

Table 2

Installation

This furnace is manufactured with 2” CPVC vent & intake couplings. Use transition cement to connect PVC or ABS pipe to these fittings. For furnaces requiring installation of 3” pipe, the transition from 2” to 3” should be made as close to the furnace as possible, and only when the piping is sloped enough to prevent condensation from collecting.

This furnace must not be connected to Type B, BW, or L vent or vent connector, and must not be vented into a masonry chimney. A masonry chimney may be used as a chase or passageway for approved venting materials providing the masonry chimney is not also being used to vent products of combustion. Never common vent this appliance with another appliance. Never use a vent which is used by a solid fuel appliance.

Piping may run vertically or horizontally and must be adequately supported to prevent strain on joints, sagging, separation, and detachment from the furnace. Horizontal runs of piping must be supported every three to five feet. Condensation within the furnace secondary heat exchanger and in the vent pipe is a normal occurrence. Vent pipe must be installed to maintain a minimum ¼ inch per foot downward slope toward the furnace to return

condensate to the furnace's drain system. Condensation may also occur in the intake pipe. This commonly takes place during the summer months when humid air enters an intake pipe that runs through a cool basement or other conditioned space. Refer to intake pipe options for using the RF000142 kit and managing condensation.

WARNING

To avoid bodily injury, fire or explosion, solvent cements must be kept away from all ignition sources (i.e., sparks, open flames, and excessive heat) as they are combustible liquids. Avoid breathing cement vapors or contact with skin and/or eyes.

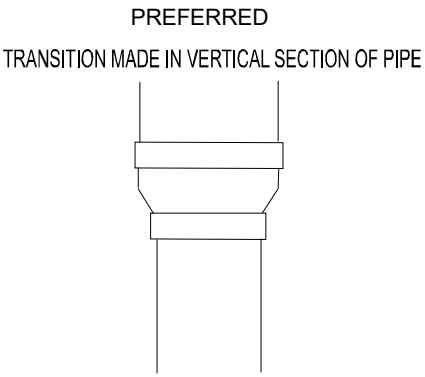

Figure 4

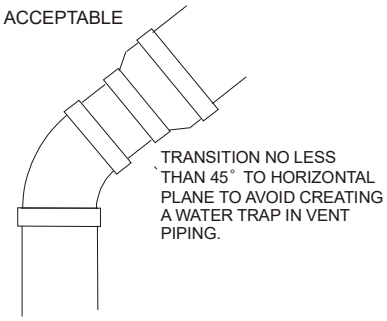

Figure 5

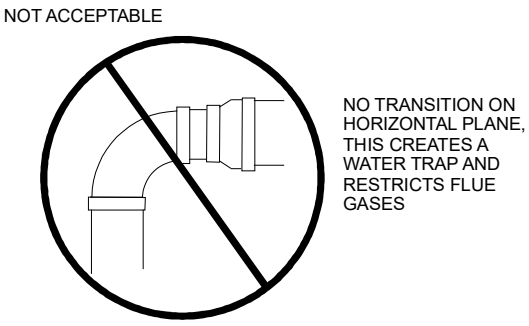

Figure 6

Precautions should be taken to prevent condensate from freezing inside the flue/vent pipe, combustion air intake pipe and/or at the pipe terminations. All flue/vent and/or combustion air piping exposed to temperatures below 35°F for extended periods of time should be insulated with ½" thick closed cell foam. All vent/flue piping exposed to outdoors in excess of the terminations permitted as described in the provided installation manual should be insulated with ½" thick closed cell foam. Inspect piping for leaks prior to installing insulation. If the combustion air intake or flue vent pipe is to be installed above a finished ceiling or other area where dripping of condensate will be objectionable, insulating the combustion air pipe may be necessary. Use ½" thick closed cell foam insulation where required. Refer to vent & intake options for using the RF000142 kit and managing condensation.

Pipe Sizing

Consult table 3 to determine what diameter piping is required for your installation. Lengths shown in table 3 apply to single pipe & two pipe installations. In a two pipe installation do not add intake and vent pipe lengths together. Both pipes would normally be equal in length, if different, then the longest pipe must be within the limits of table 3. It is preferable to up-size from 2" to 2.5" or 3" pipe if the pipe length & elbow count are near maximum. This will help avoid nuisance pressure switch opening caused by prevailing winds & sudden changes in atmospheric pressure.

(UP TO 4,999 FT ALTITUDE)

MODEL	Pipe Size (in)	Number of Elbows							
		1	2	3	4	5	6	7	8
*R9S960403BU	2	95	90	85	80	75	70	65	60
	3	103	96	89	82	75	68	61	54
*R9S960603BU	2	90	85	80	75	70	65	60	55
	3	158	151	144	137	130	123	116	109
*R9S960805CU	2	55	50	45	40	35	30	25	20
	3	151	144	137	130	123	116	109	102

(5,000 - 7,500 FT ALTITUDE)

MODEL	Pipe Size (in)	Number of Elbows							
		1	2	3	4	5	6	7	8
*R9S960403BU	3	100	93	87	81	75	69	63	57
*R9S960603BU	3	100	93	87	81	75	69	63	57
*R9S960805CU	3	80	73	67	61	55	49	43	37

Table 3

Vent Pipe Connection

The vent pipe outlet is sized to accept 2" pipe. Secure vent pipe directly into the furnace fitting with the appropriate glue. Alternately, a small section of 2" pipe may be glued in the furnace socket and a rubber coupling installed to allow removal for future service. Piping should be routed in a manner to avoid contact with refrigerant lines, metering devices, condensate drain lines, etc. If necessary, clearances may be increased by creating an offset using two 45° elbows (Figure 7).

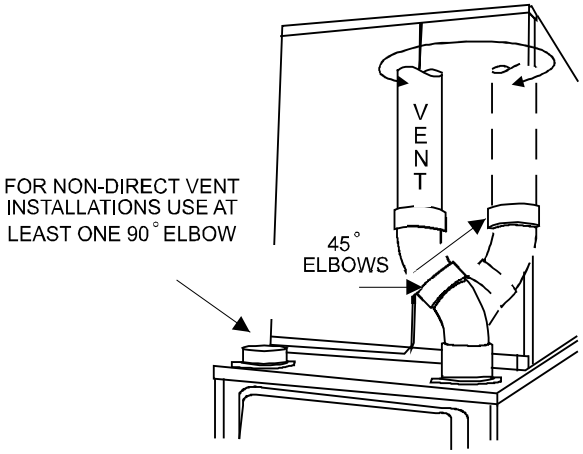

Increased Clearance Configuration

Figure 7

WARNING

Edges of sheet metal holes may be sharp. Use gloves as a precaution when removing hole plugs.

Combustion Air Pipe Connection

If the furnace is being installed without a combustion air pipe, a 90° elbow should be used on the combustion air intake to guard against blockage.

On up flow / horizontal models, secure the combustion air intake pipe to the air intake coupling using a rubber coupling supplied with the furnace. The rubber coupling may be omitted by inverting the intake coupling and gluing pipe directly to it. Piping may also be glued to the intake coupling in its original position by using a plastic coupling.

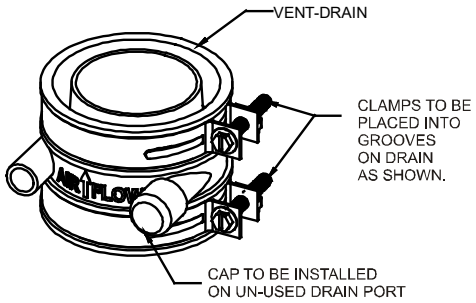

Figure 8

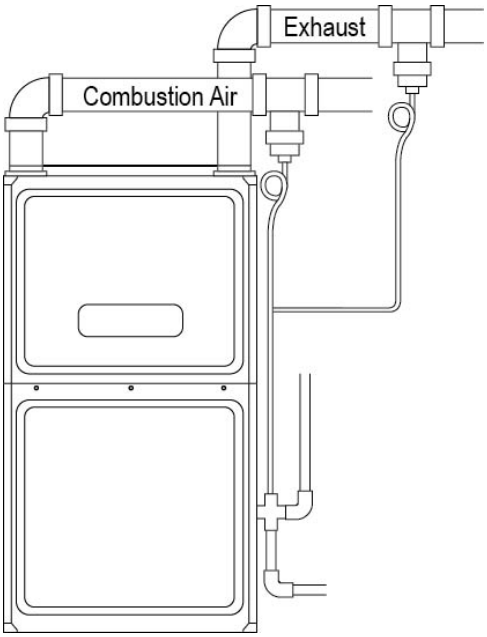

Figure 9

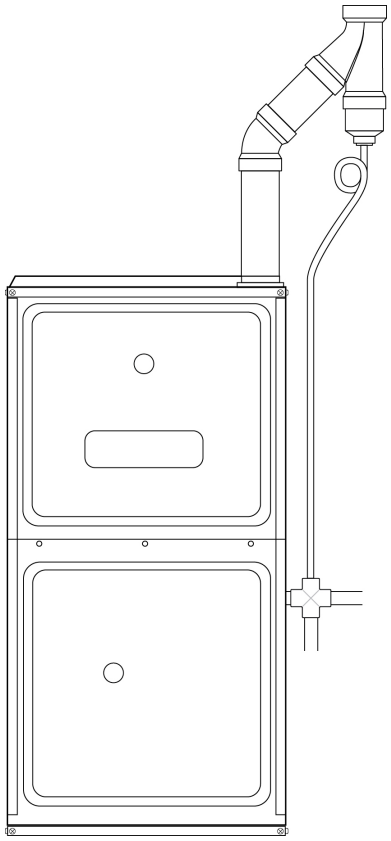

Figure 10

Vent & Intake Options for Condensate Management

The RF000142 coupling (Figure 8) can be secured directly to the furnace intake and/or vent piping if condensation is a concern. If the RF000142 is used on the combustion air inlet, it must be installed with the arrow pointing up. It should be noted, the combustion air will actually be moving in a direction opposite of the arrow on the RF000142 coupling. It must have a field supplied, trapped drain tube free-draining to proper condensate disposal location. A loop in the drain tube can serve as a trap. The unused

RF000142 drain fitting should be capped. A tee installed in the vent and/or intake pipe is also an acceptable method of capturing condensation. For vertical vent piping, a PVC wye can be used for capturing condensation (see figure 10). Any of these options must have a field supplied, trapped drain tube or pipe, free-draining to proper condensate disposal location. A loop in the drain tube can serve as a trap.

Alternate Vent & Intake Pipe Connections

When installing a furnace horizontally with the left side down, alternate flue and combustion air pipe connections may be used. This method allows the flue and combustion air piping to be run vertically through the side of the furnace (facing up in horizontal left). The alternate vent location is the 3" hole directly in line with the induced draft blower outlet.

When using the horizontal alternate vent configuration, you must use the RF000142 vent drain kit. See Figures 11 & 12 & follow steps below.

NOTE: In the horizontal left installation position, a means of condensate collection must be provided to keep vent pipe condensate from entering the draft inducer housing. If the vent drain elbow is eliminated from the installation, the RF000142 kit must be used.

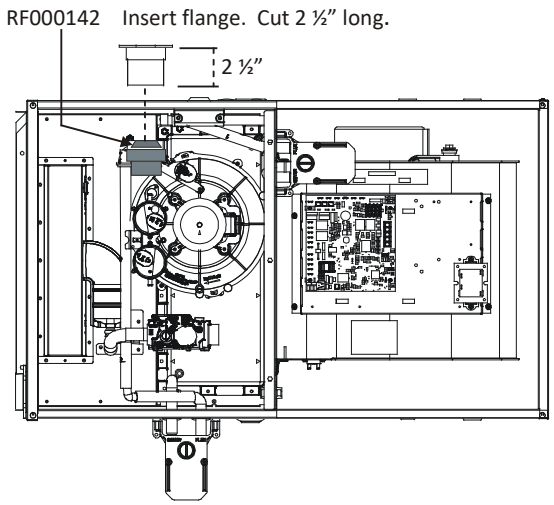

Figure 11

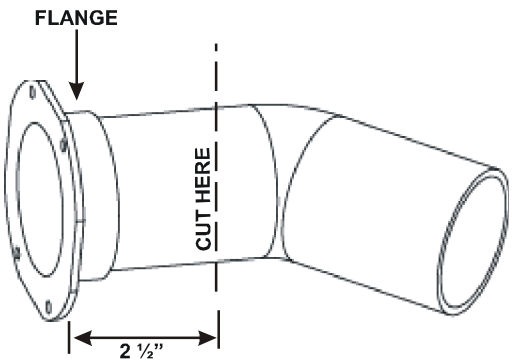

Vent/Flue Pipe Cut
Figure 12

DOWN VENTING UPFLOW MODEL FURNACES ONLY

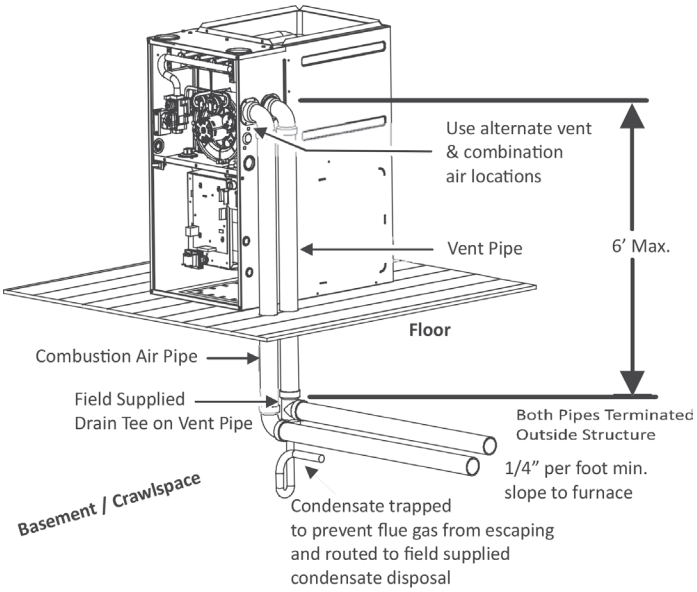

All piping and fittings must be joined per material manufacturers specifications to prevent separation and flue gas leaks.

Figure 13

WARNING

The rubber elbow is not designed to support a load. When the rubber elbow is mounted externally to the furnace cabinet, extreme care must be taken to adequately support field-supported vent/flue piping, as damage can result in leaks causing bodily injury or death due to exposure to flue gases, including carbon monoxide.

CAUTION

Be sure not to damage internal wiring or other components when reinstalling coupling and screws.

1. Remove the four screws from the vent pipe flange on top the furnace.
2. Remove the internal elbow, vent pipe and gasket.
3. Cut the internal vent pipe 2 ½" from the flange. Discard the un-flanged section.
4. Remove the 3" plastic plug (in line with the inducer outlet) and insert it in the space vacated by removal of the internal vent pipe.
5. Install the RF000142 drain coupling with arrow facing up, on the draft inducer outlet.
6. Insert the 2 ½" flanged section of pipe with gasket through the 3" hole and connect to RF000142 drain coupling. Secure it with gear clamp provided.
7. Use the four self-tapping screws removed in step 1 to secure flange to cabinet.
8. Connect drain hose to the uncapped port on the RF000142 coupling, refer to page 20, Section entitled "Upflow Model Installed Horizontally With Left Side Down - Alternate" for drain connection details.

When using the alternate venting location, either in a horizontal left side down installation or a vertical installation using down – venting, the alternate combustion air opening can be used. A locating dimple is located on the right side of the furnace cabinet. The locating dimple is 1-⅞" measured from the front edge of the cabinet in line with the knock out. To use the alternate combustion air location:

1. Remove screws and combustion air flange and gasket from cabinet.
2. Insert the 3" cabinet plug from the drain bag assembly in the unused combustion air hole.
3. Drill a pilot hole at the cabinet dimple (size dictated by knockout tool used).
4. Use a knockout tool to create a 3" diameter hole.
5. Secure the combustion air flange and gasket to the furnace cabinet using the self-tapping screws removed in step 1.

Pipe Termination

Products of combustion must always be vented outside. A vent pipe must never terminate in an attic, crawl space, or any other part of a dwelling. Follow the vent pipe & intake pipe termination requirements listed below as well as all applicable local, State and National codes.

All terminations (vent and/or intake) must be located at least 12" above ground level or the anticipated snow level. All vent terminations (non-direct and direct vent) must terminate at least 3 feet above any forced air inlet located within 10 feet.

The vent termination of a non-direct vent application must terminate at least 4 feet below, 4 feet horizontally from, or 1 foot above any door, window, or gravity air inlet into any building.

The vent termination of a direct vent application must terminate at least 12" from any opening through which flue gases may enter a building (door, window, or gravity air inlet).

The vent termination of vent pipe run vertically through a roof must terminate at least 12" above the roof line (or the anticipated snow level) and be at least 12" from any vertical wall (including any anticipated snow build up).

A vent termination shall not terminate over public walkways or over an area where condensate or vapor could create a nuisance or hazard or could be detrimental to the operation of regulators, relief valves, or other equipment.

The combustion air intake termination of a direct vent application should not terminate in an area which is frequently dusty or dirty.
Vent & combustion air pipes may terminate vertically through a roof, or horizontally through an outside wall. The combustion air intake and vent pipe can be terminated in two different pressure zones. The intake vent can terminate on one side of the building, while the flue vent can be terminated on another side of the building or through the roof. In addition, the combustion air intake can be terminated in a sufficiently ventilated attic. Vertical vent pipe terminations should be as shown in figure 14.
The penetration of pipes through the roof must be sealed water tight with proper flashing such as is used with a plastic plumbing vent.

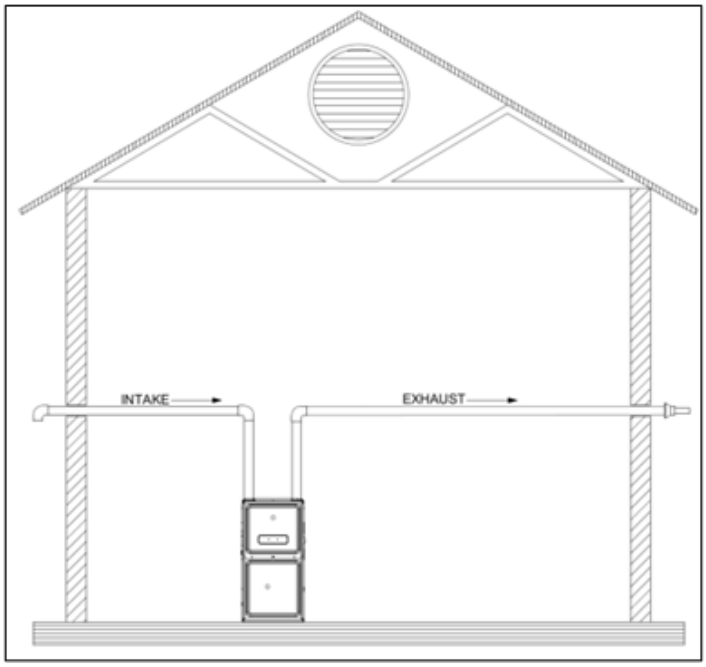

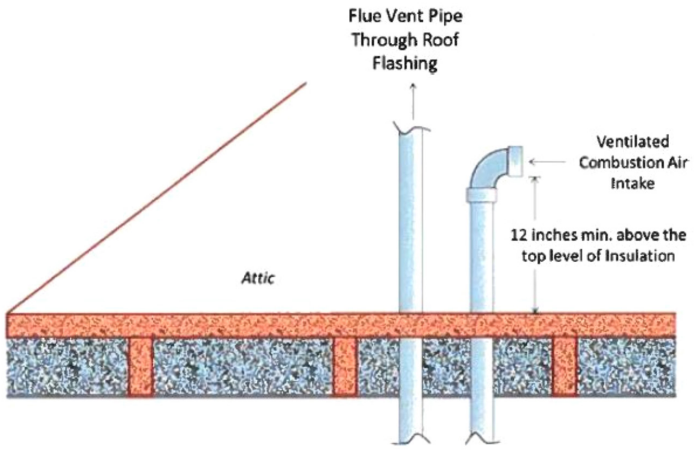

Exhaust Flue and Ventilated Combustion Air Vent Terminations

Horizontal vent pipe terminations should be as shown in the following figures. To secure the pipe passing through the wall and prohibit damage to piping connections, a coupling should be installed on either side of the wall and solvent cemented to a length of pipe connecting the two couplings. The length of pipe should be the wall thickness plus the depth of the socket fittings to be installed on the inside and outside of the wall. The wall penetration should be sealed with silicone caulking material.

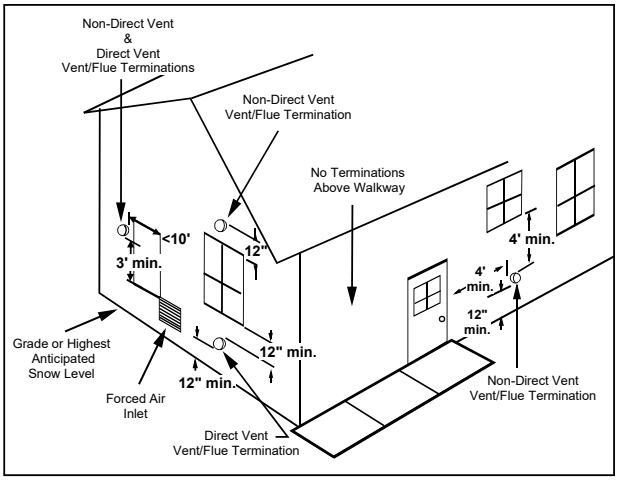

Vent Termination Clearances
Figure 14

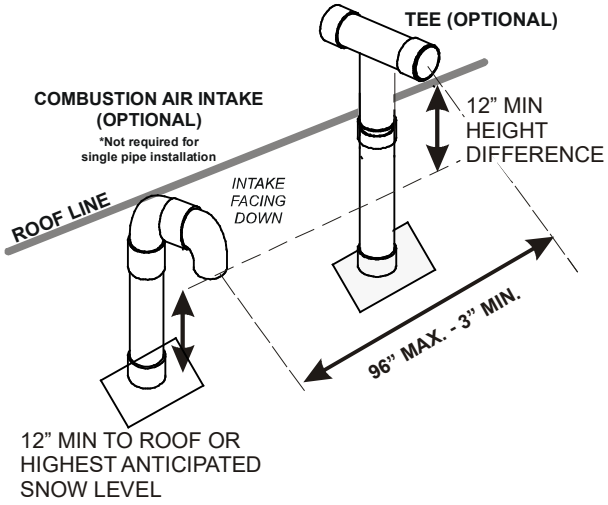

Vertical Termination
Figure 15

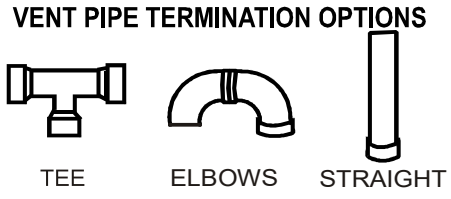

Figure 16

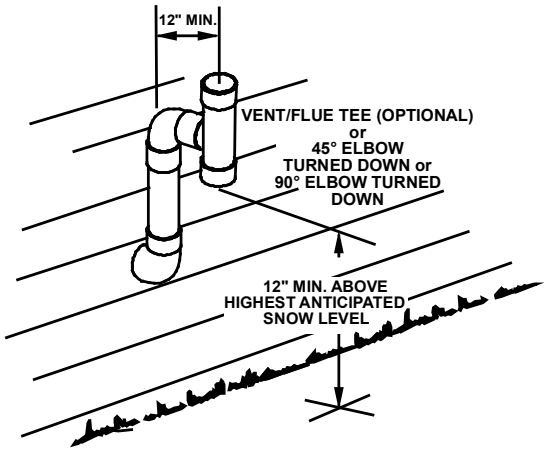

Horizontal Termination (Single Pipe)
Above Highest Anticipated Snow Level
Figure 17

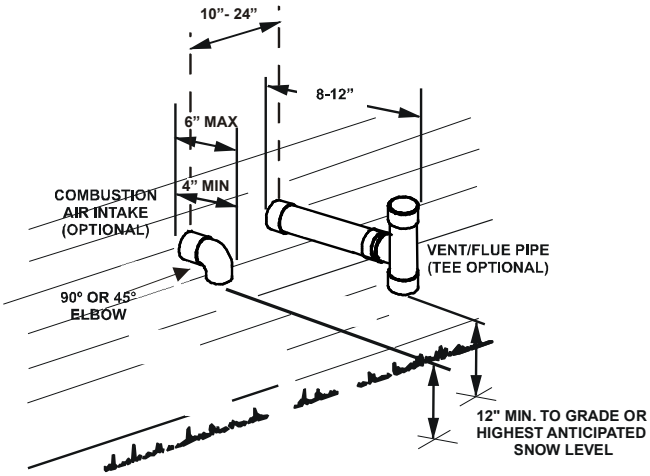

Standard Horizontal Terminations (Dual Pipe)
Figure 18

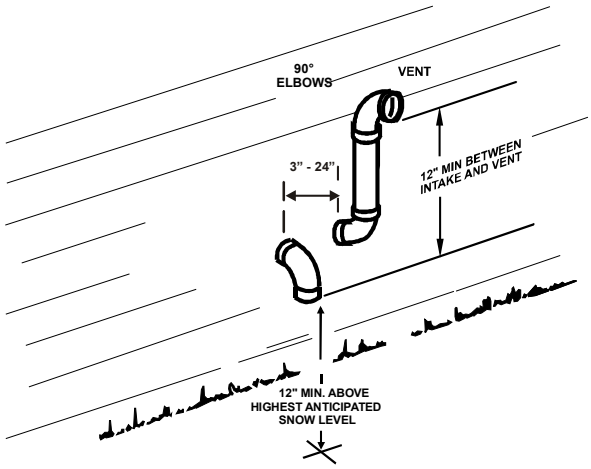

Alternate Horizontal Vent Termination (Dual Pipe)
Figure 19

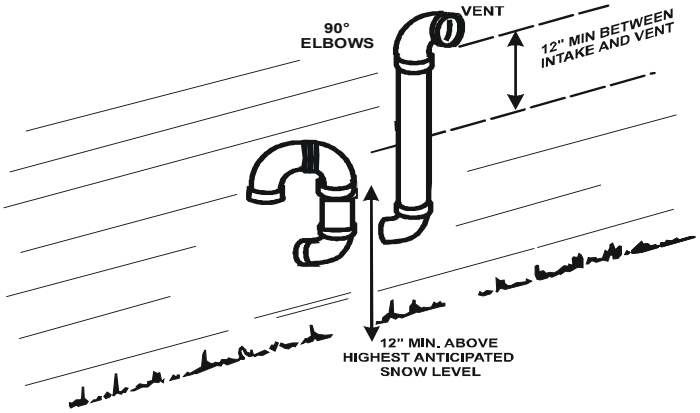

Combustion Air Intake may also be snorkeled to obtain 12" min ground clearance.
Alternate Vent Termination Above Anticipated Snow Level (Dual Pipe)
Figure 20

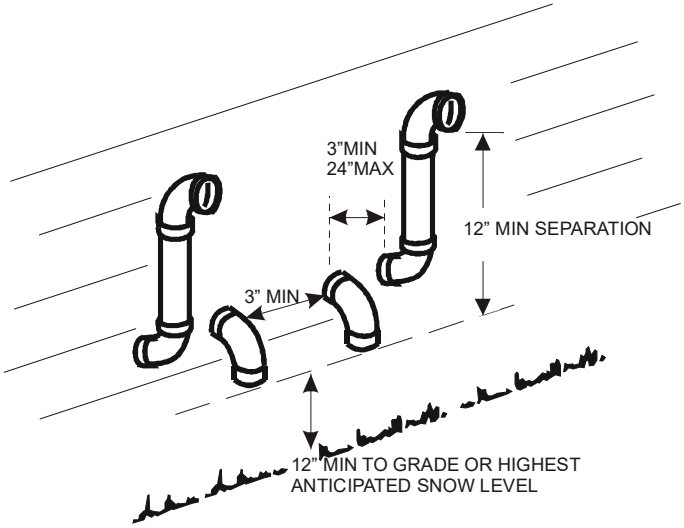

Termination of Multiple Direct Vent Furnaces
Figure 21

Vent/Intake Terminations For Installation of Multiple Direct Vent Furnaces

If more than one direct vent furnace is to be installed vertically through a common roof top, maintain the same minimum clearances between the exhaust vent and air intake terminations of adjacent units as with the exhaust vent and air intake terminations of a single unit.
If more than one direct vent furnace is to be installed horizontally through a common side wall, maintain the clearances as in the following figure. Always terminate all exhaust vent outlets at the same elevation and always terminate all air intakes at the same elevation.

Concentric Vent Termination Option

Refer to the directions provided with the Concentric Vent Kit or IO-619 for installation specifications.

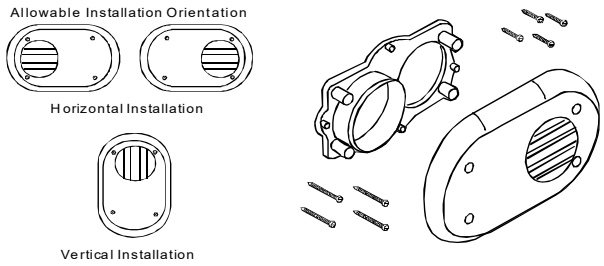

Side Wall Vent Kit
Figure 22

Side Wall Vent Kit Option

This kit is to be used with 2" or 3" direct vent systems. The vent kit must terminate outside the structure and may be installed with the intake and exhaust pipes located side-by-side or with one pipe above the other. These kits are **NOT** intended for use with single pipe (non-direct vent) installations.

Refer to the directions furnished with the Side Wall Vent Kit (p/n 0170K00000S or 0170K00001S) for installation specifications.

CONDENSATE DRAIN LINES & DRAIN TRAP

A condensing gas furnace achieves its high level of efficiency by extracting heat from the products of combustion to the point where condensation takes place. The condensate must be collected in the furnace drain trap and routed to an appropriate drain location in compliance with local and national codes.

Follow the bullets listed below when installing the drain system. Refer to the following sections for specific details concerning furnace drain trap installation and drain hose hook ups.

- The drain trap supplied with the furnace must be used.
- The drain trap must be primed at time of installation.
- The drain line between furnace and drain location must meet local and nation codes.
- The drain line between furnace and drain location must maintain a ¼ inch per foot downward slope toward the drain.
- Do not trap the drain line in any other location than at the drain trap supplied with the furnace.
- If the drain line is routed through an area which may see temperatures near or below freezing, precautions must be taken to prevent condensate from freezing within the drain line.
- If an air conditioning coil is installed with the furnace, a common drain may be used. An open tee must be installed in the drain line, near the cooling coil, to relieve positive air pressure from the coil's plenum. This is necessary to prohibit any interference with the function of the furnace's drain trap.

NOTE: In vertical installations, air conditioning coil condensate may drain into the furnace trap as long as there is a trap between the coil and the furnace trap and the drain pipe is not terminating below the water level of the furnace trap.

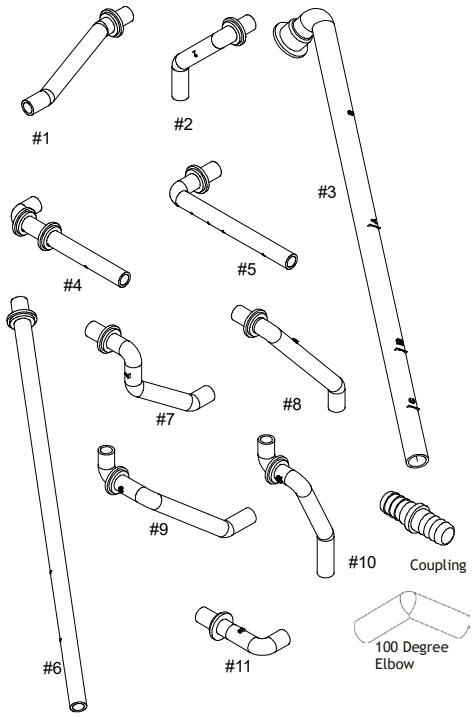

FIGURE 23

NOTE: DRAIN COMPONENTS SHOWN FOR INFORMATION PURPOSES ONLY. FOR HORIZONTAL INSTALLATIONS, A HORIZONTAL DRAIN KIT MAY BE NEEDED. REFER TO THE SPECIFICATIONS SHEET FOR KIT PART NUMBER.

GENERAL DRAIN INFORMATION

All furnace models come with a factory installed drain trap. For vertical installations, the trap will remain in the factory position. All furnace models installed horizontally require the trap to be relocated. Many drain hoses have a built–in grommet which will provide a cabinet seal when installed. See instructions below for your model and installation position. ***NOTE: Both sides of the drain trap must be primed prior to initial furnace start up.***

FIELD SUPPLIED DRAIN

Drain the furnace and air conditioning coil if applicable, in compliance with code requirements. In horizontal installations, a field installed rubber coupling will allow the drain trap to be removed for cleaning. The drain trap must be primed before initial furnace start up. When an air conditioning coil drain is connected to the field supplied furnace drain, it must be vented. An open tee must be installed at a height no higher than the bottom of the furnace collector box to prevent air conditioning condensate from backing up into the furnace, if the common drain was blocked.

UPFLOW MODEL INSTALLED VERTICALLY

The trap and factory installed hoses remain as shipped. The furnace drain may exit either the right or left side of the furnace cabinet. Both sides of the cabinet have two .875" diameter holes which can be used interchangeably for drain and low voltage wiring purposes. If a higher drain exit is needed, a .875" diameter hole may be added in the area shown in Figure 24. Any unused cabinet opening must be sealed. Do not allow drain hose to sag or trap water.

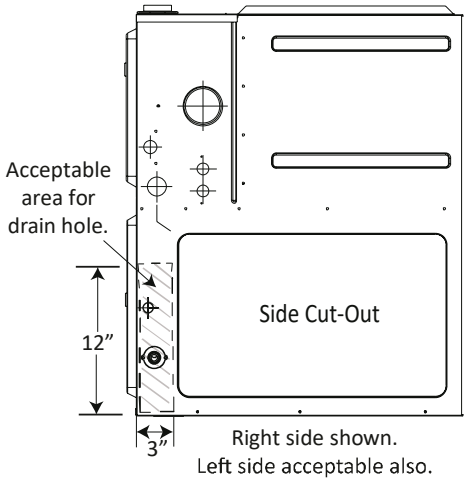

FIGURE 24

DRAIN EXITING RIGHT SIDE

1. Locate and Install the 45º pipe/hose drain coupling from the outside of the cabinet (barbed end goes in the cabinet) through hole in the right side of the cabinet and secure with two field supplied #8 self-tapping screws (see Figure 25).
2. Locate the long drain hose #3 and cut at line "A".
3. Install large end of hose #3 to trap outlet and secure with 1.25" clamp.
4. Install smaller end of hose #3 on 45º elbow and secure with 1" clamp.
5. Refer to Field Supplied Drain section for instructions on field supplied/installed drain on outlet of furnace trap.

DRAIN EXITING LEFT SIDE

1. Install the 45º pipe/hose drain coupling from the outside of the cabinet (barbed end goes in the cabinet) through the hole in the left side of the cabinet and secure with two field supplied #8 self-tapping screws (see Figure 25).
2. Locate the long drain hose #3 and cut at "B" line for a 17.5" cabinet; cut at line "C" for a 21" cabinet; do not cut for a "D" width cabinet.
3. Install large end of hose #3 to trap outlet and secure with 1.25" clamp.
4. Install smaller end of hose #3 on 45º elbow and secure with 1" clamp.
5. Refer to Field Supplied Drain section for instructions on field supplied/installed drain on outlet of furnace trap.

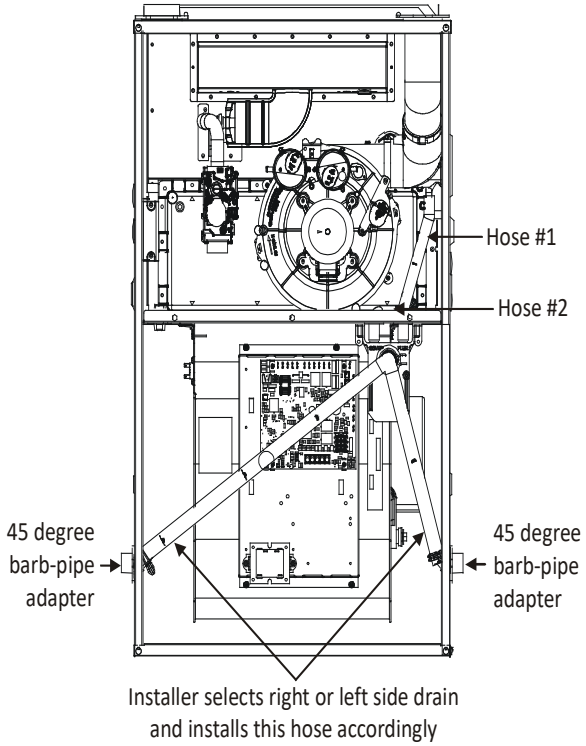

Figure 25

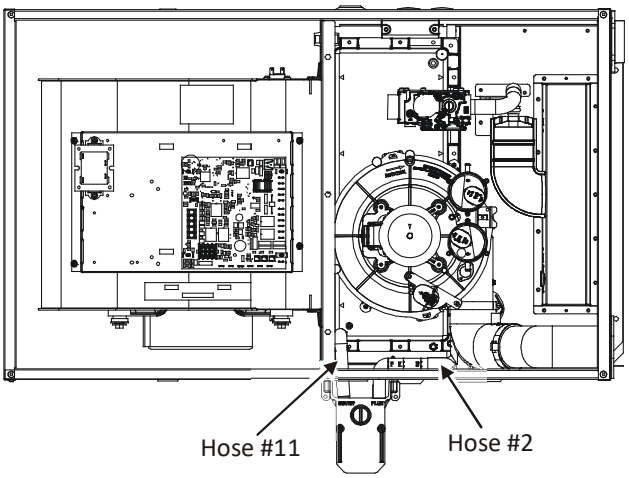

Figure 26

Upflow Model Installed Horizontally with Right Side Down

Minimum 5 ½" clearance is required for the drain trap beneath the furnace.

1. Remove the clamps from both ends of the drain hoses.
2. Remove the two screws holding the drain trap to the blower deck.
3. Remove the trap and two hoses from the blower deck.
4. Remove the two plugs from the right side of the cabinet and install them in the blower deck.
5. Draining the Vent Elbow: Locate hose #2 (factory installed) and cut 1" away from the 45º bend, discard the 45º section. Insert hose #2 from outside the cabinet through the cabinet drain hole nearest the top, secure it to the barbed fitting in the elbow with a red clamp.
6. Draining the Collector Box: Install the non-grommet end of hose #11 from outside the cabinet in the bottom drain hole. Install on collector box and secure with a silver clamp.
7. Use two silver clamps and secure the hoses to drain trap. The trap outlet faces the front of the furnace. Secure the trap to the cabinet using two screws removed in step 2 by inserting the two screws through the large set of holes in the top mounting tabs of the trap into the two predrilled holes in the side of the cabinet.
8. Refer to Field Supplied Drain section for instructions on field supplied/installed drain on outlet of furnace trap.

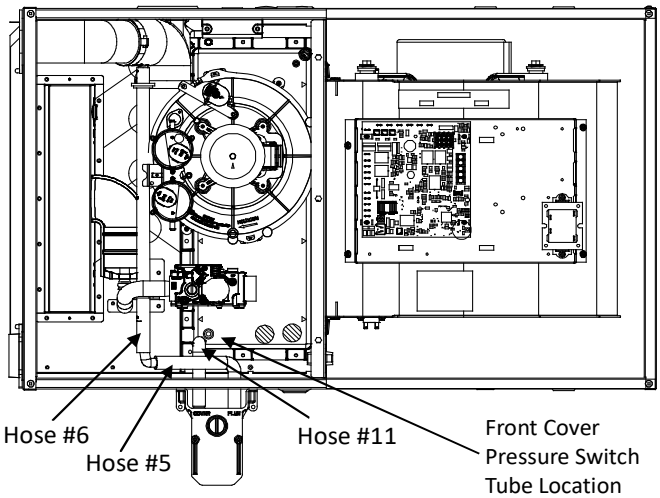

Figure 27

Upflow Model Installed Horizontally with Left Side Down

Minimum 5 ½" clearance is required for the drain trap beneath the furnace.

**See Front Cover Pressure Switch Tube Location on Figure 27.*

1. Remove the clamps from the two drain tubes on the trap.
2. Remove the two screws holding the drain trap to the blower deck.
3. Remove the trap and hoses from the blower deck.
4. Remove the two plugs from the left side of the cabinet and install them in the blower deck.
5. Draining the Vent Elbow: Locate hose #6. Measuring from the non-grommet end; cut off and discard 1 ½" for a "D" width cabinet, 5" for a "C" width cabinet, 8 ½" for a "B" width cabinet.
6. Remove the rubber plug from vent – drain elbow side port. Place hose #6 on the vent – drain elbow side port and secure with a silver clamp.

7. ***Unused vent-drain elbow drip leg port must be sealed to prevent flue gases from escaping. Insert the rubber plug removed in step 6 into the unused elbow drain port. Inserting a blunt tool such as a 3/16" Allen wrench into the center of the rubber plug will stretch the plug and allow complete insertion.***
8. Locate hose #5 and cut 3" from the non-grommet end. Discard the section without the grommet.
9. Insert the cut end of tube #5 through the lower cabinet drain hole.
10. Connect hose #6 & hose #5 using 100º elbow and secure with two red clamps.
11. Draining the Collector Box: Remove cap from left side collector box drain port (bottom in horizontal left position) and install it on right side (top) collector box drain port.
12. Install the non-grommet end of hose #11 from outside the cabinet in the upper drain hole. Install on collector box and secure with a silver clamp.
13. Use two silver clamps and secure the hoses to drain trap. The trap outlet faces the front of the furnace. Secure the trap to the cabinet using two screws removed in step 2 by inserting the two screws through the large set of holes in the top mounting tabs of the trap into the two pre-drilled holes in the side of the cabinet.
14. Refer to Field Supplied Drain section for instructions on field supplied/installed drain on outlet of furnace trap.

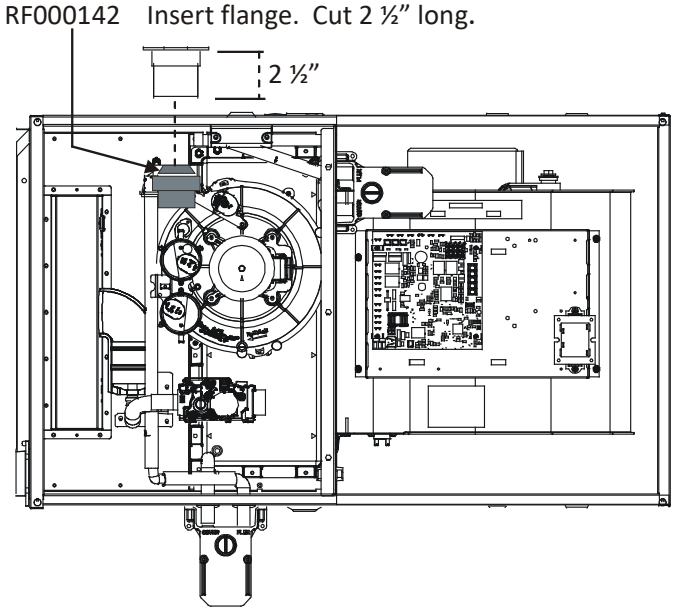

Figure 28

Upflow Model Installed Horizontally With Left Side Down - Alternate

**See Front Cover Pressure Switch Tube Location on Figure 27.*

1. Draining the RF000142 Coupling: Locate hose #2 (factory installed). Cut off and discard the 45° radius end.
2. Install 90°radius end of hose #2 on RF000142 drain outlet and secure with a red clamp.
3. Insert coupling in hose #2 and secure with a red clamp.
4. Locate hose #5 and cut 3" from the non-grommet end. Discard the section without the grommet.
5. Insert the cut end of tube #5 through the lower cabinet drain hole.
6. Insert 100° elbow in the cut end of hose #5.
7. Locate hose #6. Using red clamps, connect between the coupling and 100° elbow, cutting off excess tubing.
8. Draining the Collector Box: Remove cap from left side collector box drain port (bottom in horizontal left position) and install it on right side (top) collector box drain port and secure with a red clamp.
9. Install the non-grommet end of hose #11 from outside the cabinet in the upper drain hole. Install on collector box and secure with a silver clamp.
10. Use two silver clamps and secure the hoses to drain trap. The trap outlet faces the front of the furnace. Secure the trap to the cabinet using two screws removed in step 2 by inserting the two screws through the large set of holes in the top mounting tabs of the trap.

ELECTRICAL CONNECTIONS

WARNING

Edges of sheet metal holes may be sharp. Use gloves as a precaution when removing hole plugs.

WARNING

To prevent personal injury or death due to electric shock, disconnect electrical power before installing or servicing this unit.

WARNING

HIGH VOLTAGE!
To avoid the risk of injury, electrical shock or death, the furnace must be electrically grounded in accordance with local codes or in their absence, with the latest edition of the National Electrical Code.



Wiring Harness

The wiring harness is an integral part of this furnace. Wires are color coded for identification purposes. Refer to the wiring diagram for wire routings. If any of the original wire as supplied with the furnace must be replaced, it must

be replaced with wiring material having a temperature rating of at least 105°C. Any replacement wiring must be a copper conductor.

120 Volt Line Connections

Before proceeding with electrical connections, ensure that the supply voltage, frequency, and phase correspond to that specified on the unit rating plate. Power supply to the furnace must be NEC Class 1, and must comply with all applicable codes. The furnace must be electrically grounded in accordance with local codes or, in their absence, with the latest edition of The National Electric Code, ANSI NFPA 70.

Use a separate fused branch electrical circuit containing properly sized wire, and fuse or circuit breaker. The fuse or circuit breaker must be sized in accordance with the maximum overcurrent protection specified on the unit rating plate. An electrical disconnect must be provided at the furnace location.

Connect hot, neutral, and ground wires as shown in the wiring diagram located on the unit's blower door. Metal conduit is not considered a substitute for an actual ground wire to the unit. For direct vent applications, the cabinet opening to the junction box must be sealed air tight using either a UL approved bushing such as Heyco Liquid Tight or by applying non-reactive UL approved sealant to bushing.

Line polarity must be observed when making field connections.

NOTE: Wire routing must not interfere with circulator blower operation, filter removal, or routine maintenance.

Junction Box Relocation

WARNING

HIGH VOLTAGE!
To avoid personal injury or death due to electrical shock, disconnect electrical power before servicing or changing any electrical wiring.



WARNING

HIGH VOLTAGE!
To avoid the risk of electrical shock, wiring to the unit must be polarized and grounded.



CAUTION

Label all wires prior to disconnection when servicing controls. Wiring errors can cause improper and dangerous operation. Verify proper operation after servicing.

Line voltage connections can be made through either the right or left side panel. The furnace is shipped configured for a left side electrical connection. To make electrical connections through the opposite side of the furnace, the junction box must be relocated to the right side prior to making electrical connections. To relocate the junction box, perform the following steps.

1. Remove the burner compartment door.
2. Remove and save the two screws securing the junction box to the side panel.
3. Relocate junction box and associated plugs and grommets to opposite side panel. Secure with screws removed in step 2.

To ensure proper unit grounding, the ground wire should run from the furnace ground screw located inside the furnace junction box all the way back to the electrical panel. **NOTE:** Do not use gas piping as an electrical ground. To confirm proper unit grounding, turn off the electrical power and perform the following check.

1. Measure resistance between the neutral (white) connection and any unpainted surface.
2. Resistance should measure 10 ohms or less.

This furnace is equipped with a blower door interlock switch which interrupts unit voltage when the blower door is opened for servicing. Do not defeat this switch.

24 Volt Thermostat Wiring

Low voltage connections can be made through either the right or left side panel. Thermostat wiring entrance holes are located in the blower compartment. The following figures show connections for single and two-stage A/C & HP systems.

This furnace is equipped with a 40 VA transformer to facilitate use with most cooling equipment. Consult the wiring diagram, located on the blower compartment door, for further details of 115 Volt and 24 Volt wiring.

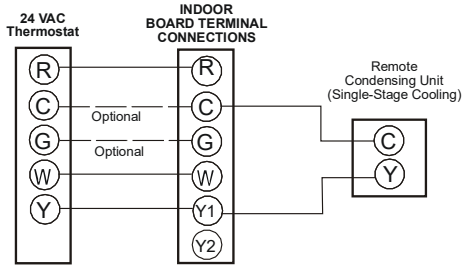

Non-communicating Single Stage A/C
Figure 29A

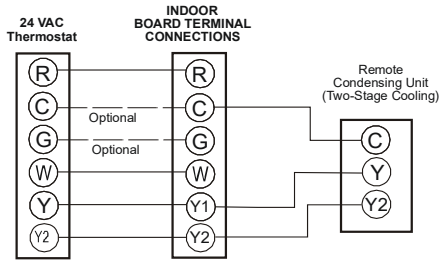

Non-communicating Two Stage A/C
Figure 29B

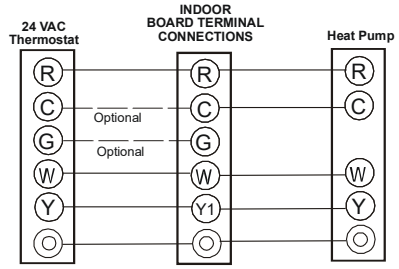

Non-Communicating Single Stage Heat Pump
Figure 29C

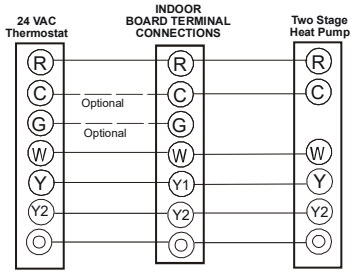

Non-Communicating Two Stage Heat Pump
Figure 29D

NOTE: Equipment type (Single-stage cooling, Two-stage cooling, Single-stage heat pump, Two-stage heat pump) MUST be setup through the OdS menu by the installer for proper system operation. See Using Push-Button Switches for instructions on how to navigate the control menu.

Twinning

For Furnace Twinning information, please refer to the Furnace Twinning installation manual IO-2001. Please scan the QR code below to open the document.

NOTE: Each furnace must be connected to its own 115 VAC power supply. The L1 connection to each furnace must be in phase (connected to circuit breakers on the same 115 VAC service panel phase leg). To verify that the furnaces are in phase, check from L1 to L1 on each furnace with a voltmeter. If the furnaces are in phase, the voltage between both furnaces will be ZERO.

Low Voltage Ventilation

The Ventilation connections provide a dry contact for field ventilator wiring connections. These connections are normally open and energize during the R-32 fault/alarm condition. A VT IN and a VT OUT connectors are provided and are shown in the image below.

Low Voltage A2L Alarm

The A2L alarm connection provides 24VAC for field alarm wiring connections. These connections are normally open and energize during the R-32 fault/alarm condition. An A2L Alarm connector is provided and is shown in the image below.

Field Installation Accessories (Daughter Board)

Additional accessories that do not have dedicated terminals on the furnace control board may require an additional daughter board to be installed. Please refer to service manual on your product for more information.

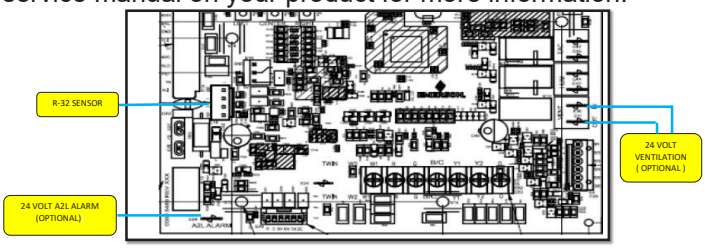

24 VAC Accessories - Accessories Wiring
Figure 30

Single-Stage Heating Thermostat Application

A single-stage thermostat with only one heating stage is needed to control this furnace.

WARNING

ALL ACCESSORIES THAT MAY BECOME A POTENTIAL IGNITION SOURCE IF INSTALLED. SUCH AS ELECTRONIC AIR CLEANERS, MUST ONLY BE POWERED THROUGH OUR ACCESSORY CONTROL BOARD KIT. IF AN ELECTRONIC AIR CLEANER IS ALREADY INSTALLED IN THE DUCT WORK AND NOT CONNECTED TO THE ACCESSORY CONTROL BOARD. IT WILL HAVE TO BE DISABLED OR REMOVED. ENSURE THAT ANY ADDITIONAL WIRING FROM THE INDOOR UNIT TO THE ACCESSORY CONTROL BOARD IS ROUTED AND PROTECTED FROM DAMAGE WEAR, AVOIDING THE FLUE PIPE AND ANY JOINTS THAT MAY NEED BRAZED OR DISCONNECTED FOR SERVICE. REFER TO THE PRODUCT SPECIFICATION SHEET FOR THE ACCESSORY CONTROL BOARD KIT PART NUMBER.

120 Volt Line Connection of Accessories Humidifier and Electronic Air Cleaner

WARNING

HIGH VOLTAGE!
To avoid personal injury or death due to electrical shock, disconnect electrical power before servicing or changing any electrical wiring.

The furnace integrated control module is equipped with dedicated ¼ inch EAC and HUM relay terminals for controlling external power to an optional field supplied humidifier and/or electronic air cleaner. Additional line voltage wiring to the inside of the furnace must conform to all local codes and have a minim um temperature rating of 105°C. All line voltage wire splices must be made inside the furnace.

When utilized, the HUM relay will be closed during normal heating operation and the EAC relay will be closed during fan operation. 115VAC must be present on the one terminal from HUM or EAC to take advantage of the second terminal.

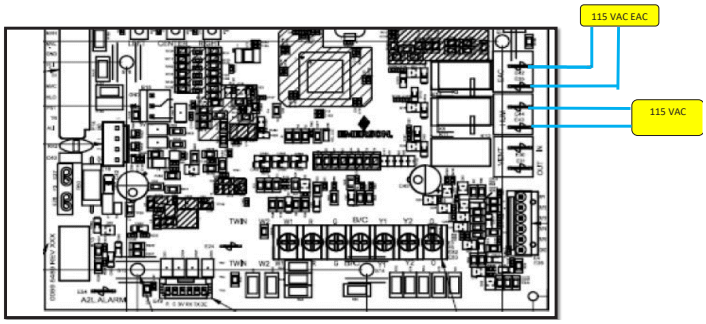

120 Volt Line Connection of Accessories Humidifier (HUM) & Electronic Air Cleaner (EAC)
Figure 31

Fossil Fuel Applications

This furnace can be used in conjunction with a heat pump in a fossil fuel application. A fossil fuel application refers to a combined gas furnace and heat pump installation which uses an outdoor temperature sensor to determine the most cost efficient means of heating (heat pump or gas furnace). Strictly follow the wiring guidelines in the fossil fuel kit installation instructions. All furnace connections must be made to the furnace integrated control module and the "FURNACE" terminal strip on the fossil fuel control board.

GAS SUPPLY AND PIPING

CAUTION

To prevent unreliable operation or equipment damage, the gas manifold pressure must be as specified on the unit rating plate. Only minor adjustments should be made by adjusting the gas valve pressure regulator.

WARNING

Possibility property damage, personal injury or death may occur if the correct conversion kits are not installed. The appropriate kits must be applied to ensure safe and proper furnace operation. All conversions must be performed by a qualified installer or servicer agency.

INLET GAS SUPPLY PRESSURE		
Natural Gas	**Minimum: 4.5" W.C.**	**Maximum: 10.0" W.C.**

Table 4

The furnace rating plate includes the approved furnace gas input rating and gas types. The furnace must be equipped to operate on the type of gas applied. This includes any conversion kits required for alternate fuels and/or high altitude.

Inlet gas supply pressures must be maintained within the ranges specified in table 4. The supply pressure must be constant and available with all other household gas fired appliances operating. The minimum gas supply pressure must be maintained to prevent unreliable ignition. The maximum must not be exceeded to prevent unit overfiring.

High Altitude Derate

The furnace, as shipped, requires no change to run between 0-4500 feet. At all altitudes the air temperature rise must be within the range listed on the Specification Sheet applicable to your model for the fuel used. Manifold pressure adjustments and combustion analysis are required for all installations above 4500 ft. Refer to "Gas Supply Pressure Measurement" section for instruction on how to properly measure and adjust manifold "outlet" pressure. The furnace should operate for a minimum of 15 minutes before taking a combustion sample. Combustion samples should be taken from beyond the furnace exhaust and must be within provided CO_2% range. See table 5 for recommended manifold pressure adjustments and proper CO_2% range. Gas heating values can vary; further pressure adjustment may be necessary to ensure furnace operates within acceptable CO_2 range.

MODEL	Manifold Pressure at 5000 ft	Manifold Pressure at 7500 ft	CO_2% Natural Gas	Max Allowable Venting (3 in. only)
*R9S960403BU	2.5" w.c	2.4" w.c.	6.5 - 8.5	100 ft
*R9S960603BU				100 ft
*R9S960805CU				80 ft

Table 5

Gas Valve

This unit is equipped with a 24 volt gas valve controlled during furnace operation by the integrated control module. Taps for measuring the gas supply pressure and manifold pressure are provided on the valve.

The gas valve has a manual ON/OFF control located on the valve itself. This control may be set only to the "ON" or "OFF" position. Refer to the lighting instructions label or *Startup Procedure & Adjustment* for use of this control during start up and shut down periods.

Gas Piping Connections

WARNING

To avoid the possibility of explosion or fire, never use a match or open flame to test for leaks.

WARNING

If the gas furnace is installed in a basement, an excavated area or confined space, it is strongly recommended to contact a certified contractor to install a gas detecting warning device in case of a gas leak.

When sizing gas lines, be sure to include all appliances which will operate simultaneously. The gas piping supplying the furnace must be properly sized based on the gas flow required, specific gravity of the gas, and length of the run. The gas line installation must comply with local codes, or in their absence, with the latest edition of the National Fuel Gas Code, NFPA 54/ANSI Z223.1.

To connect the furnace to the building's gas piping, the installer must supply a ground joint union, drip leg, manual shutoff valve, and line and fittings to connect to gas valve. In some cases, the installer may also need to supply a transition piece from ½" pipe to a larger pipe size.

The following stipulations apply when connecting gas piping. Refer to *Gas Piping Connections* figures 32 and 33 for typical gas line connections to the furnace.

- Gas piping must be supported external to the furnace cabinet so that the weight of the gas line does not distort the burner rack, manifold or gas valve.
- Use black iron or steel pipe and fittings for building piping. Where possible, use new pipe that is properly chamfered, reamed, and free of burrs and chips. If old pipe is used, be sure it is clean and free of rust, scale, burrs, chips, and old pipe joint compound.
- Use pipe joint compound on male threads ONLY. Always use pipe joint compound (pipe dope) that is APPROVED FOR ALL GASES. DO NOT apply compound to the first two threads.
- Use ground joint unions.
- Install a drip leg to trap dirt and moisture before it can enter the gas valve. The drip leg must be a minimum of 3" long.
- Install a ⅛" NPT pipe plug fitting, accessible for test gauge connection, immediately upstream of the gas supply connection to the furnace.
- Always use a back-up wrench when making the connection to the gas valve to keep it from turning. The orientation of the gas valve on the manifold must be maintained as shipped from the factory. Maximum torque for the gas valve connection is 375 in-lbs; excessive over-tightening may damage the gas valve.
- Install a manual shutoff valve between the gas meter and unit within six feet of the unit. If a union is installed, the union must be downstream of the manual shutoff valve, between the shutoff valve and the furnace.
- Tighten all joints securely.
- Connection method must be in compliance with all local and national codes. US: National Fuel Gas Code (NFGC) NFPA 54-2012/ANSI Z223.1-2012 and the Installation Standards, Warm Air Heating and Air Conditioning Systems ANSI/NFPA 90B.
- Connect the furnace to the building piping by one of the following methods:
  - Rigid metallic pipe and fittings.
  - Semi-rigid metallic tubing and metallic fittings. Aluminum alloy tubing must not be used in exterior locations. In order to seal the grommet cabinet penetration, rigid pipe must be used to reach the outside of the cabinet. A semi-rigid connector to the gas piping may be used from there.
- Use listed gas appliance connectors in accordance with their instructions. Connectors must be fully in the same room as the furnace.
- Protect connectors and semirigid tubing against physical and thermal damage when installed. Ensure aluminum-alloy tubing and connectors are coated to protect against external corrosion when in contact with masonry, plaster, or insulation, or subjected to repeated wetting by liquids such as water (except rain water), detergents, or sewage.

Natural Gas Capacity of Pipe
In Cubic Feet of Gas Per Hour (CFH)

Length of Pipe in Feet	Nominal Black Pipe Size				
	1/2"	3/4"	1"	1 1/4"	1 1/2"
10	132	278	520	1050	1600
20	92	190	350	730	1100
30	73	152	285	590	980
40	63	130	245	500	760
50	56	115	215	440	670
60	50	105	195	400	610
70	46	96	180	370	560
80	43	90	170	350	530
90	40	84	160	320	490
100	38	79	150	305	460

(Pressure 0.5 psig or less and pressure drop of 0.3" W.C.; Based on 0.60 Specific Gravity Gas)

$$CFH = \frac{\text{BTUH Furnace Input}}{\text{Heating Value of Gas (BTU/Cubic Foot)}}$$

Table 6

The gas piping may enter the left or right side of the furnace cabinet. The installer must supply rigid pipe long enough to reach the outside of the cabinet to seal the grommet cabinet penetration. A semi-rigid connector to the gas piping can be used outside the cabinet per local codes. ½" NPT pipe and fittings are required. For models with an "L" shaped manifold, a 4 ½" long nipple is required. For models with a hook shaped manifold, a 2" long nipple is required.

A semi-rigid connector to the gas piping can be used outside the cabinet per local codes. From the elbow, the length of pipe and the fittings required will vary by the side chosen, location of union and cabinet width. The union may be placed inside or outside of the cabinets.

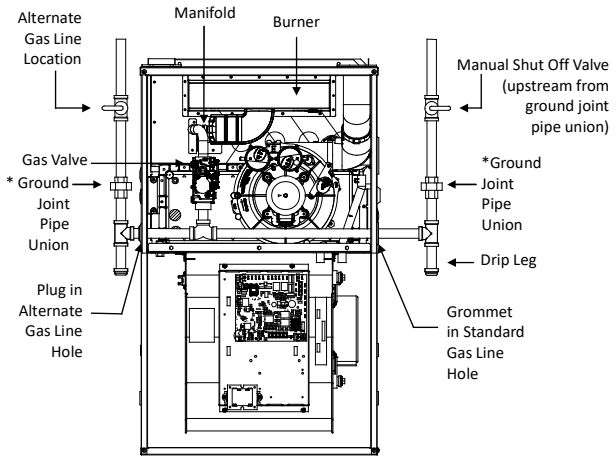

* NOTE: Union may be inside furnace cabinet where allowed by local codes.

Upflow
Figure 32

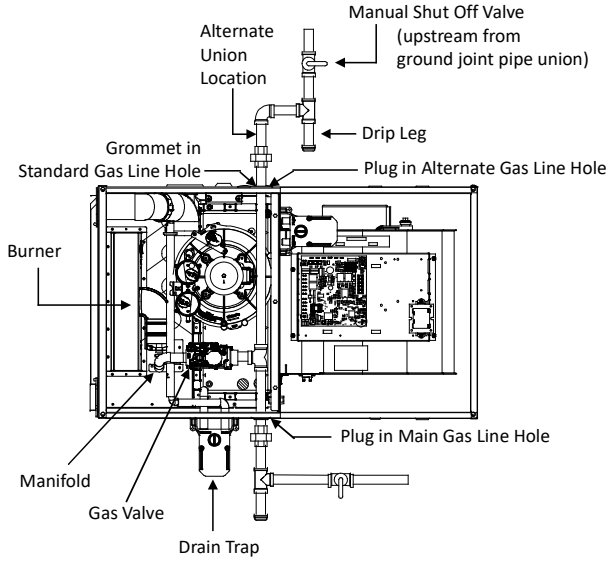

Upflow - Horizontal Left
Figure 33

Gas Piping Checks

Before placing unit in operation, leak test the unit and gas connections.

Check for leaks using an approved chloride-free soap and water solution, an electronic combustible gas detector, or bother approved testing methods.

NOTE: Never exceed specified pressures for testing. Higher pressure may damage the gas valve and cause subsequent overfiring, resulting in heat exchanger failure.

Disconnect this unit and shutoff valve from the gas supply piping system before pressure testing the supply piping system with pressures in excess of ½ psig (3.48 kPa).

Isolate this unit from the gas supply piping system by closing its external manual gas shutoff valve before pressure testing supply piping system with test pressures equal to or less than ½ psig (3.48 kPA).

CIRCULATING AIR & FILTERS

Duct work - Air Flow

Duct systems and register sizes must be properly designed for the CFM and external static pressure rating of the furnace. Ductwork should be designed in accordance with the recommended methods of “Air Conditioning Contractors of America” Manual D.

Install the duct system in accordance with Standards of the National Fire Protection Association, NFPA 90A and 90B.

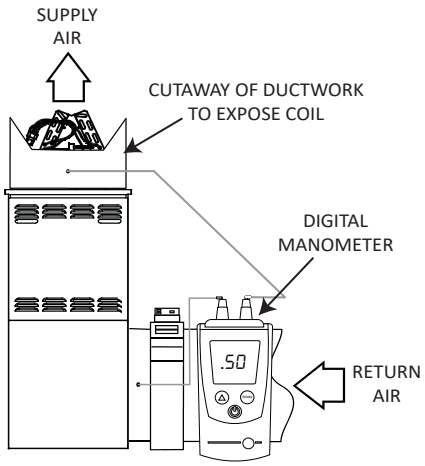

Figure 34

A closed return duct system must be used, with the return duct connected to the furnace. **NOTE:** Ductwork must never be attached to the back of the furnace. For upflow installations requiring 1800 CFM or more, use either two side returns or bottom return or a combination of side/bottom. Flexible joints may be used for supply and return connections to reduce noise transmission. To prevent the blower from interfering with combustion air or draft when a central return is used, a connecting duct must be installed between the unit and the utility room wall. Never use a room, closet, or alcove as a return air chamber.

Checking Duct Static

WARNING

Edges of sheet metal holes may be sharp. Use gloves as a precaution when removing sheet metal from return air openings.

Refer to your furnace rating plate for the maximum ESP (external duct static) rating.

Total external static refers to everything external to the furnace cabinet. Cooling coils, filters, ducts, grilles, registers must all be considered when reading your total external static pressure. The supply duct pressure must be read between the furnace and the cooling coil. This reading is usually taken by removing the “A” shaped block off plate from the end on the coil; drilling a test hole in it and reinstalling the block off plate. Take a duct static reading at the test hole. Tape up the test hole after your test is complete. The negative pressure must be read between the filter and the furnace blower.

Too much external static pressure will result in insufficient air that can cause excessive temperature rise. This can cause limit switch tripping and heat exchanger failure.

To determine total external duct static pressure, proceed as follows:

1. With clean filters in the furnace, use a manometer to measure the static pressure of the return duct at the inlet of the furnace (Negative Pressure).
2. Measure the static pressure of the supply duct (Positive Pressure).
3. The difference between the two numbers is the total external static pressure.

EXAMPLE:
static reading from return duct = -.1” w.c.
static reading from supply duct = .3” w.c.
total external static pressure on this system = .4” w.c.

NOTE: Both readings may be taken simultaneously and read directly on the manometer if so desired. If an air conditioner coil or Electronic Air Cleaner is used in conjunction with the furnace, the readings must also include theses components, as shown in the following drawing.

4. Consult proper tables for the quantity of air.

If the total external static pressure exceeds the maximum listed on the furnace rating plate, check for closed dampers, registers, undersized and/or oversized poorly laid out duct work.

The temperature rise of the furnace must be within the temperature rise range listed on the furnace rating plate.

Bottom Return Air Opening [Upflow Models]

The bottom return air opening on upflow models utilizes a “lance and cut” method to remove sheet metal from the duct opening in the base pan. To remove, simply press out the lanced sections by hand to expose the metal strips retaining the sheet metal over the duct opening. Using tin snips, cut the metal strips and remove the sheet metal covering the duct opening. In the corners of the opening, cut the sheet metal along the scribe lines to free the duct flanges. Using the scribe line along the duct flange as a guide, unfold the duct flanges around the perimeter of the opening using a pair of seamer pliers or seamer tongs.

NOTE: Airflow area will be reduced by approximately 18% if duct flanges are not unfolded. This could cause performance issues and noise issues.

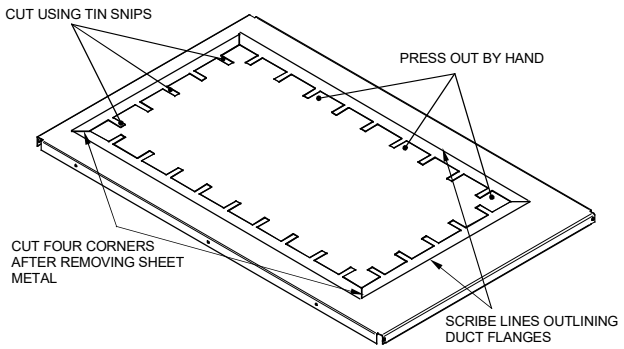

Duct Flange Cut Out
Figure 35

When the furnace is used in connection with a cooling unit, the furnace should be installed upstream of the cooling coil.

When the furnace is installed without a cooling coil, it is recommended that a removable access panel be provided in the outlet air duct. This opening shall be accessible when the furnace is installed and shall be of such a size that the heat exchanger can be viewed for visual light inspection or such that a sampling probe can be inserted into the airstream. The access panel must be made to prevent air leaks when the furnace is in operation.

NOTE: In a horizontal installation the air conditioning coil must be adequately supported by proper brackets and supports. Inadequate coil support can result in furnace cabinet distortion and air leakage.

When the furnace is heating, the temperature of the return air entering the furnace must be between 60°F and 80°F.

Filters - Read This Section Before Installing The Return Air Duct work

Filters must be used with this furnace. Discuss filter maintenance with the building owner. Filters do not ship with this furnace, but must be provided, sized and installed externally by the installer. Filters must comply with UL900 or CAN/ULCS111 standards. Damage or repairs due to

the installation of the furnace without filters is not covered under the warranty.

On upflow units, guide dimples locate the side return cutout locations. Use a straight edge to scribe lines connecting the dimples. Cut out the opening on these lines. **NOTE:** An undersized opening will cause reduced airflow.

Refer to the Filter Sizing Chart to determine filter area requirements.

Model	Minimum Recommended Filter Size^
*R9S960403BU	1 - 16 X 25 Side or Bottom
*R9S960603BU	1 - 16 X 25 Side or Bottom
*R9S960805CU	1 - 20 X 25 Bottom/2 - 16 X 25 Side Return

^ Larger filters may be used, filters may also be centrally located.

TABLE 7

UPRIGHT INSTALLATIONS

Depending on the installation and/or customer preference, differing filter arrangements can be applied. Filters can be installed in the central return register or a side panel external filter rack kit (upflows). As an alternative a media air filter or electronic air cleaner can be used as the requested filter.

Figure 36 shows possible filter locations.

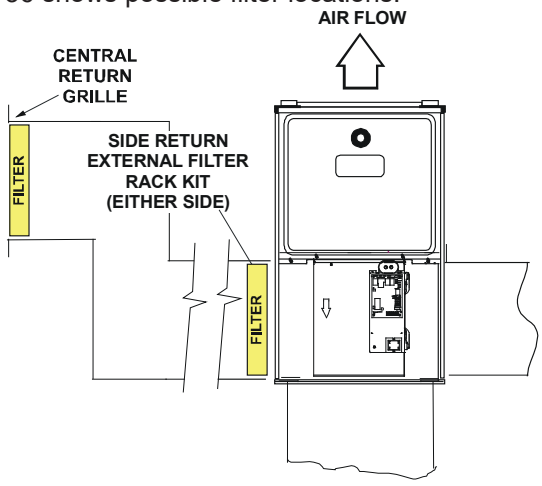

POSSIBLE UPRIGHT UPFLOW
FIGURE 36

HORIZONTAL INSTALLATIONS

Filters must be installed in either the central return register or in the return air duct work.

USING PUSH-BUTTONS

All user settings may be accessed by three push-button on the control board. The three buttons are labeled Left, Center and Right. The center button is used to enter into the option menu and make the selection. The left and right buttons are used to browse the main menu and option menus. When the center button is pressed in the main menu, the furnace control will go to the option menu and display the default or previously selected option. Pressing the left or right button will display the next available option. When the next adjustable or selectable option is displayed, the furnace control will flash the option with ½ second ON and ½ second OFF indicating the option has not yet been selected.

To select an option; press and release the center button to stop the current option from flashing. When the option has stopped flashing, press the center button again to select that option.

While navigating through options, if no buttons are pressed during a 30 second time period, the display will timeout and return to the Status Menu. Simultaneously pressing and releasing any two buttons will also return the furnace control back to the Status Menu. If the previously displayed option was not selected and a timeout occurs, the displayed option will not be stored in control memory as a selected option.

R-32 FUNCTION

This furnace is equipped with a control board that is capable of shutting off the gas heat and turning on the blower fan in case of an R-32 refrigerant leak in the indoor evaporator coil. If the cooling unit that is paired with this furnace does not utilize R-32 as the refrigerant, the R-32 functionalities in the furnace control board will need to be turned off for the furnace to run properly.

R-32 function on the control board is ON by default. The R-32 function can be disabled through the furnace control by entering the A2L Function Enabled menu and selecting “no”. If A2L function is disabled, the furnace control will ignore all A2L functions. If A2L function is enabled, the control will monitor the R-32 sensor information. To enter the A2L Function Enabled menu, press the left or right button until the LED displays “A2E”. Press the center button and the LED will display the selected option (yes or no). Press the left or right button to select one of the two options and press the center button twice to confirm the option.

R-32 SENSOR WIRE ROUTING

IMPORTANT NOTE: WIRING ROUTING MUST NOT INTERFERE WITH CIRCULATOR BLOWER OPERATION, FILTER REMOVAL OR ROUTINE MAINTENANCE. WIRE SHOULD NOT BE ROUTED NEAR HOT SURFACES AND SHOULD BE PROTECTED FROM SHARP EDGES.

The R-32 Sensor wire coming from the indoor evaporator coil will need to be routed into the furnace and connected to the connection point on the furnace control board. This wire should be routed alongside the thermostat wires through the low voltage openings in the left or right side of the furnace blower compartment. Please see the electrical section for the location of the R-32 Sensor connection on the control board.

The R-32 function on the furnace control board may need to be enabled or disabled if any element of the installation changes from the original setup. The specific scenario will depend on each installation, so please refer to the evaporator coil's installation manual to verify what is required for your setup. For example, if the furnace was initially installed with an evaporator coil that utilized R-410A refrigerant, and the coil is later replaced with one that uses R-32 refrigerant, then R-32 function mode on the furnace control board must be enabled, and the R-32 sensor wire must be connected to the furnace control board.

Furnace Start-Up

During furnace start up, the furnace control will identify the connected R-32 sensor and will start monitoring the sensor communication. A green LED located next to the sensor connection will indicate if there is communication between the furnace control and the R-32 sensor. The LED will be ON during the duration of the startup and then will either start blinking or turn OFF. The blinking LED signifies that communication with the R-32 sensor is present. The LED OFF signifies that there is no signal with the sensor.

If there are no alarms or faults, the furnace will go into regular run mode after a warm up period. The furnace control monitors the R-32 sensor once per second.

R-32 Refrigerant Leak

If the R-32 sensor on the indoor evaporator coil detects a specified concentration of R-32 refrigerant, the furnace will enter Mitigation Mode to dilute the refrigerant concentrations in case of a leak. In Mitigation Mode, the furnace will do the following:

1. Display the A2L Refrigerant Leakage error code (EAL)
2. Shut down the gas operation
3. Energize the optional ventilation and alarm outputs.
4. Run the fan at max CFM airflow

Once the R-32 sensor stops detecting a leak, the fan will continue to run for 5 minutes. After the 5 minutes, if there are no other alarms or faults, the control will de-energize the optional ventilation and alarm outputs and then go back to the original operating mode per the thermostat."

A2L Verification

The A2L Function Verification menu allows the installer to verify if the R-32 function operates properly. This menu simulates the refrigerant leak process and is only able to be used when there are no active alarms or faults. To verify the R-32 functions, enter the A2L Function Verification menu and select "YES". To enter the A2L Function Verification menu, press the left or right button until LED displays "A2u". Press the center button and the LED will display the selected option (yes or no). Press the left or right button to select one of the two options and press the center button to confirm the option. Once "YES" is selected, the furnace will do the following:

1. Display the A2L Refrigerant Leakage code (EAL)
2. Shut down the gas operation
3. Energize the optional ventilation and alarm outputs.
4. Run the fan at max CFM airflow

The control will exit the verification function if:

1. The 5 minute timeout expires or
2. An alarm or fault is detected or
3. The user turns OFF the A2L Function Verification.

NOTE: To verify gas heating operation shuts down, give furnace a call for heat before entering into A2L Function Verification.

STARTUP PROCEDURE & ADJUSTMENT

NOTE: This furnace is equipped with a control board that is capable of monitoring for R-32 refrigerant leaks in the indoor refrigeration unit. Please verify that the R-32 sensor wire is plugged in to the furnace control board before startup, if applicable. If furnace is not paired with an R-32 Refrigeration system, the default settings in the furnace control board will need to be changed. Please see the R-32 section for additional information.

Furnace must have a 115 VAC power supply properly connected and grounded. Proper polarity must be maintained for correct operation. In addition to the following start-up and adjustment items, refer to further information in *Operational Checks* section.

Quick Start

Initial set up of outdoor systems are required to be configured through the control board. Navigate to OdS menu using the push buttons to properly configure the outdoor system. Selections for AC1, AC2, HP1, HP2 must be made to enable specific fan speeds and thermostat signals to function.

NOTE: Equipment type (Single-stage cooling, Two-stage cooling, Single-stage heat pump, Two-stage heat pump) MUST be setup through the OdS menu by the installer for proper system operation.

Control Board Main Menu

Menu Description	Main Menu			Option Menu			Display Text	Additional Info
	SEGT #1	SEGT#2	SEGT#3	SEGT #1	SEGT#2	SEGT#3		
Active Alarm menu	E	r	r	E	x	x	Err	(xx: code numbers) - See chart for Alarm Code definition
Last 10 Faults	F	1	0	E	x	x	F10	(xx: code numbers) - See chart for Alarm Code definition
Code Release Number		C	r	None			Cr	Code number
Shared data Revision		S	r	None			Sr	Shared Data Number
Reset to Factory Default	r	F	d	yes, no			rFd	PCB will revert back to factory default if selected yes
Outdoor Setting Menu	0	d	S	AC1 / AC2 / HP1 / HP2 / OFF			OdS	OdS option is used to select outdoor unit type (1 or 2 stage)
Blower Speed for Continuous Fan Mode	F	S	d	Fxx			FSd	(xx: Blower Speed Number F01, F02..)
Single-Stage Cooling Fan Speed		A	C	Fxx			AC	(xx: Blower Speed Number F01, F02..)
Low-stage Cooling Fan Speed, Two-Stage	A	C	1	Fxx			AC1	(xx: Blower Speed Number F01, F02..)
High-stage Cooling Fan Speed, Two-Stage	A	C	2	Fxx			AC2	(xx: Blower Speed Number F01, F02..)
Cool On Delay	C	n	d	Delay, Seconds			Cnd	Default set at 7 Secs, Adjustments can be made in 7 Secs increments from 0 to 35 Secs
Cool Off Delay	C	f	d	Delay, Seconds			Cfd	Default set at 65 Secs, Adjustments can be made in 5 Secs increments from 0 to 120 Secs
Gas Heat fan Speed	g	A	F	Fxx			gAF	(xx: Blower Speed Number F01, F02..)
Gas Heat On Delay	g	n	d	Delay, Seconds			gnd	Default set at 30 Secs, Adjustments can be made in 5 Secs increments from 5 to 30 Secs
Gas heat Off Delay	g	F	d	Delay, Seconds			gFd	Default set at 90 Secs, Adjustments can be made in 30 Secs increments from 30 to 180 Secs
Single-Stage HP Heat Fan Speed		H	P	Fxx			HP	(xx: Blower Speed Number F01, F02..)
Low-stage HP Heat Fan Speed, Two-Stage	H	P	1	Fxx			HP1	(xx: Blower Speed Number F01, F02..)
High-stage HP Heat Fan Speed, Two-Stage	H	P	2	Fxx			HP2	(xx: Blower Speed Number F01, F02..)
HP Heat off Delay	H	F	d	Delay, Seconds			HFd	Default set at 60 Secs, Adjustments can be made in 5 Secs increments from 30 to 120 Secs
HP Heat on Delay	H	n	d	Delay, Seconds			Hnd	Default set at 5 Secs, Adjustments can be made in 5 Secs increments from 5 to 30 Secs
Automatic Heat Staging - For Two Stage Control	A	H	S	no, 10, 20, 30, 60, AUt			AHS	Refer to Section " CHANGING HEATING MODE SETTING"
A2L Function Verification	A	2	u	Refer to the R-32 Section			A2u	
A2L Function Enabled	A	2	E	Refer to the R-32 Section			A2E	

Control Board Status Menu

Description of System Status	Main Menu		
	SEGT #1	SEGT#2	SEGT#3
All segments illuminated = control powering up	8	8	8
Control in Idle stage	I	d	I
Constant Fan	F	A	n
Single-Stage Cooling Fan Speed		A	C
Low Stage Cooling	1	A	C
High Stage Cooling	2	A	C
Gas Heat		g	H
Low Stage HP	1	H	P
High Stage HP	2	H	P
Defrost	d	F	t

Drain Trap Priming

The drain trap MUST be primed prior to furnace startup. To prime, fill both sides of the drain trap with water. This ensures proper furnace drainage upon startup and prohibits the possibility of flue gases escaping through the drain system.

Furnace Operation

Purge gas lines of air prior to startup. Be sure not purge lines into an enclosed burner compartment. Follow NFPA 54, National Fuel Gas Code 8.1.

Check for leaks using an approved chloride-free soap and water solution, an electronic combustible gas detector, or other approved method.

CAUTION

To prevent unreliable operation or equipment damage, the inlet gas supply pressure must be as specified on the unit rating plate with all other household gas fired appliances operating.

Furnace Startup

1. Close the manual gas shutoff valve external to the furnace.
2. Turn off the electrical power to the furnace.
3. Set the room thermostat to the lowest possible setting.
4. Remove the burner compartment door.

NOTE: This furnace is equipped with an ignition device which automatically lights the burner. Do not try to light the burner by hand.

5. Move the furnace gas valve manual control to the OFF position.
6. Wait five minutes then smell for gas. Be sure check near the floor as some types of gas are heavier than air.
7. If you smell gas after five minutes, immediately follow the safety instructions in the *Safety Considerations* on page 3 of this manual. If you do not smell gas after five minutes, move the furnace gas valve manual control to the ON position.
8. Replace the burner compartment door.
9. Open the manual gas shutoff valve external to the furnace.
10. Turn on the electrical power to the furnace.
11. Adjust the thermostat to a setting above room temperature.
12. After the burners are lit, set the thermostat to desired temperature.

Furnace Shutdown

1. Set the thermostat to the lowest setting.
   The integrated control will close the gas valve and extinguish flame. Following a 30 second delay, the induced draft blower will be de-energized. The circulator blower will shut down when the time delay expires (Time delay is selectable on all models).
2. Remove the burner compartment door and move the furnace gas valve manual control to the OFF position.
3. Close the manual gas shutoff valve external to the furnace.
4. Replace the burner compartment door.

Gas Supply Pressure Measurement
Gas Pressure Test

The line pressure supplied to the gas valve must be within the range specified on Table 4. The supply pressure can be measured at the gas valve inlet pressure tap or at a hose fitting installed in the gas piping drip leg. The supply pressure must be measured with the burners operating. To measure the gas supply pressure, use the following procedure.

1. Turn OFF gas to furnace at the manual gas shutoff valve external to the furnace. Back inlet pressure test port screw turn counter clockwise, not more than one turn.
2. Connect a calibrated manometer (or appropriate gas pressure gauge) at either the gas valve inlet pressure tap or the gas piping drip leg. See White-Rodgers 36J22Y-204 gas valve figure below for location of inlet pressure tap.

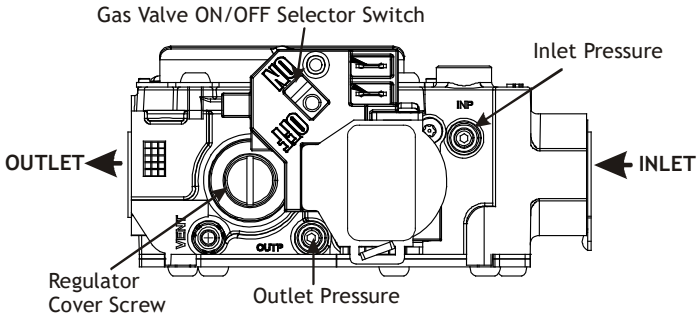

White-Rodgers Model 36J22Y-204
Figure 37A

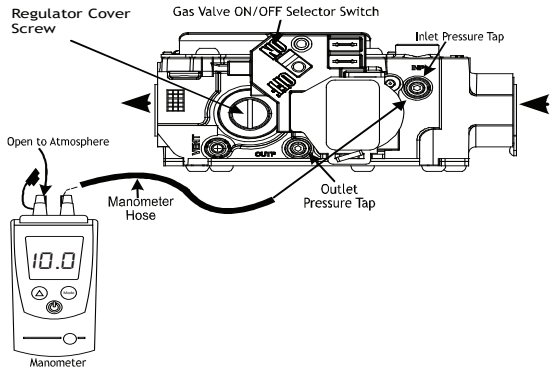

White-Rodgers Model 36J22Y-204
Connected to Manometer
Figure 37B

NOTE: If measuring gas pressure at the drip leg, a field-supplied hose barb fitting must be installed prior to making the hose connection. If using the inlet pressure tap on the White-Rodgers 36J22 gas valve, then use the 36G/J Valve Pressure Check Kit, Part No. 0151K00000S.

3. Turn ON the gas supply and operate the furnace and all other gas consuming appliances on the same gas supply line.
4. Measure furnace gas supply pressure with burners firing. Supply pressure must be within the range specified in the *Inlet Gas Supply Pressure* table 4, on page 23.

If supply pressure differs from table, make the necessary adjustments to pressure regulator, gas piping size, etc., and/or consult with local gas utility.

5. Turn OFF gas to furnace at the manual shutoff valve and disconnect manometer. Reinstall plug and tighten as needed before turning on gas to furnace.
6. Turn OFF any unnecessary gas appliances stated in step 3.

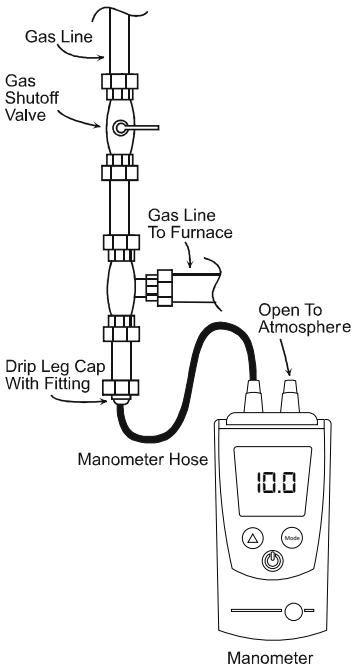

Measuring Inlet Gas Pressure (Alt. Method)
Figure 38

Gas Manifold Pressure Measurement and Adjustment

Only small variations in gas pressure should be made by adjusting the gas valve pressure regulator. The manifold pressure must be measured with the burners operating. To measure and adjust the manifold pressure, use the following procedure.

1. Turn OFF gas to furnace at the manual gas shutoff valve external to the furnace.
2. Turn off all electrical power to the system.
3. Outlet pressure tap connections:
   White-Rodgers 36J22 valve: Back outlet pressure test screw (outlet pressure tap) out one turn (counterclockwise, not more than one turn).
4. Connect calibrated manometer (or appropriate pressure gauge) at the gas valve outlet pressure tap. See White-Rodgers 36J22Y-204 gas valve Figure 37A & 37B for location of outlet pressure tap.
5. Turn ON the gas supply.
6. Turn on power and close thermostat “R” and “W” contacts to provide a call for heat.
7. Measure the gas manifold pressure with burners

firing. Adjust manifold pressure using the *Manifold Gas Pressure* table 8 shown below.

8. Remove regulator cover screw from the outlet pressure regulator adjust tower and turn screw clockwise to increase pressure or counterclockwise to decrease pressure. Replace regulator cover screw.
9. Turn off all electrical power and gas supply to the system.
10. Remove the manometer hose from the hose barb fitting or outlet pressure tap.
11. Replace outlet pressure tap: White-Rodgers 36J22 valve: Turn outlet pressure test screw in to seal pressure port (clockwise, 7 in-lb minimum).
12. Turn on electrical power and gas supply to the system.
13. Close thermostat contacts “R” and “W” to energize the valve.
    Using a leak detection solution or soap suds, check for leaks at outlet or screw (White-Rodgers valve). Bubbles forming indicate a leak. SHUT OFF GAS AND REPAIR ALL LEAKS IMMEDIATELY!

NOTE: For gas to gas conversion, consult your dealer for appropriate conversion.

Manifold Gas Pressure		
Gas	**Range**	**Nominal**
Natural	2.8 - 3.2" w.c.	3.0" w.c.

Table 8

Gas Input Rate Measurement (Natural Gas Only)

The actual gas input rate to the furnace must never be greater than that specified on the unit rating plate. To measure natural gas input using the gas meter, use the following procedure.

1. Turn OFF the gas supply to all other gas-burning appliances except the furnace.
2. While the furnace is operating at high fire rate, time and record one complete revolution of the gas meter dial, measuring the smallest quantity, usually the dial that indicates ½ cu. ft. per revolution. You will use this number to calculate the quantity of gas in cubic ft. if the furnace would consume if it ran steadily for one hour (3600 seconds).
3. If the ½ cu. ft. dial was used, multiply your number x 2.
   EXAMPLE: If it took 23 seconds to complete one revolution of the ½ ft. dial (23 x 2 = 46).

This tells us that at this rate, it would take 46 seconds to consume one cu. ft. of gas.

This tells us that in one hour, the furnace would consume 78 cu. ft. of gas. (3600 / 46 = 78)
The typical value range for 1 cu. ft. of natural gas is around 1025 BTU. Check with your gas utility, if possible. In this example, the furnace is consuming 80,000 BTUH.

NOTE: The final manifold pressure cannot vary by more than ± 0.2” w.c. for natural gas from the specified setting. Consult your local gas supplier if additional input rate adjustment is required.

4. Turn ON gas to and relight all other appliances turned off in step 1. Be certain that all appliances are functioning properly and that all pilot burners (if applicable) are operating.

Temperature Rise

Temperature rise must be within the range specified on the unit rating plate. An incorrect temperature rise may result in condensing in or overheating of the heat exchanger. An airflow and temperature rise table is provided on page 42 and in the Specification Sheet applicable to your model. Determine and adjust temperature rise as follows:

1. Operate furnace with burners firing for approximately ten minutes. Ensure all registers are open and all duct dampers are in their final (fully or partially open) position.
2. Place thermometers in the return and supply ducts as close to the furnace as possible. Thermometers must not be influenced by radiant heat by being able to “see” the heat exchanger.
3. Subtract the return air temperature from the supply air temperature to determine the air temperature rise. Allow adequate time for thermometer readings to stabilize.
4. Adjust temperature rise by adjusting the circulator blower speed. Increase blower speed to reduce temperature rise. Decrease blower speed to increase temperature rise. Refer to *Startup Procedure and Adjustment - Circulator Blower Speeds* for speed changing details.

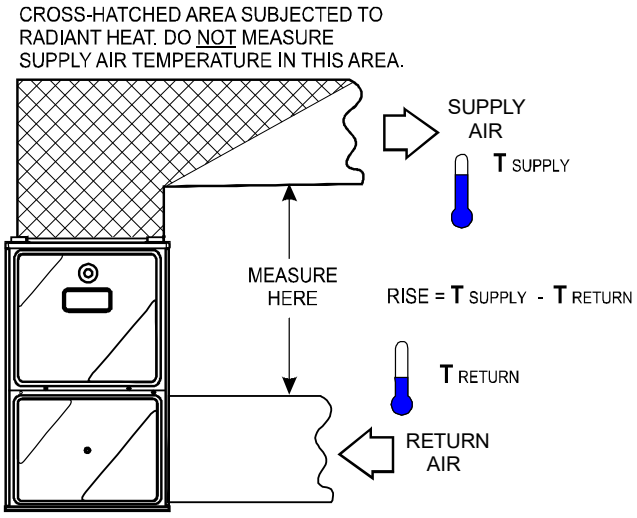

Temperature Rise Measurement
Figure 39

Circulator Blower Speeds

This furnace is equipped with a multi-speed circulator blower. This blower provides ease in adjusting blower speeds. Table 9 and the Specification Sheet applicable to your model provides an airflow table, showing the relationship between airflow (CFM) and external static pressure (E.S.P.), for the proper selection of heating and cooling speeds.

1. Determine the tonnage of the cooling system installed with the furnace. If the cooling capacity is in BTU/hr divide it by 12,000 to convert capacity to tons.
   Example: Cooling Capacity of 30,000 BTU/hr.
   30,000/12,000 = 2.5 Tons
2. Determine the proper air flow for the cooling system. Most cooling systems are designed to work with air volume between 350 and 450 CFM per ton. Most manufacturers recommend an air flow of about 400 CFM per ton.
   Example: 2.5 tons X 400 CFM per ton = 1000 CFM
3. Select the heating speed for your model from the heating speed chart in the Specification Sheet. The selected speed must provide a temperature rise within the rise range listed with the particular model.

Continuous Fan Mode Speed Selection

To change the main blower speed in circulation mode, see the following steps:

1. Press left or right button until LED displays “FSd”. Press center button and LED will display the currently selected speed number as Fxx (xx: Blower speed number from 1 to 9).
2. The control shall cycle through available fan speeds every time the left/right button is pressed. All 9 speeds are available for circulation.
3. When the center button is pressed, the current displayed speed shall stop flashing. Press the center button again to select the option and the control shall immediately apply that blower setting and return to the corresponding main menu.

THERMOSTAT CALL	AVAILABLE SPEEDS (FSd menu)
G	F01
	F02
	F03
	F04
	F05
	F06
	F07
	F08
	F09

Circulation Speed Table

Cooling Mode Speed Selection

To change the main blower speed in COOLING mode, follow the following steps:

NOTE: If Heat Pump system is configured in OdS menu (HP1 or HP2) COOLING thermostat calls will include “Y1”/Y2” + “O” terminals energized.

1. Press left or right button until LED displays “AC1” (for single stage COOLING) or “AC2” (for Two stage COOLING). Press center button and the LED will display the currently selected speed number as Fxx (xx: Blower speed number from 1 to 9).
2. The control shall cycle through available fan speeds every time the left/right button is pressed. All 9 speeds are available for both Single and Two Stage cooling.
3. When the center button is pressed, the current displayed speed shall stop flashing. Press the center button again to select the option and the control shall immediately apply that blower setting and return to the corresponding main menu.

THERMOSTAT CALL (OdS: Terminal)	AVAILABLE SPEEDS (AC1 menu)
1AC: Y1 1HP: Y1 + O	F01
	F02
	F03
	F04
	F05
	F06
	F07
	F08
	F09

Single Stage Cooling Speed Table

THERMOSTAT CALL (OdS: Terminal)	AVAILABLE SPEEDS (AC2 menu)
2AC: Y1 + Y2 2HP: Y1 + Y2 + O	F01
	F02
	F03
	F04
	F05
	F06
	F07
	F08
	F09

Two Stage Cooling Speed Table

Gas Heating Mode Speed Selection

To change the main blower speed in GAS HEATING mode, see the following steps:

1. Press left or right button until LED displays “gAF”. Press center button and LED will display the currently selected fan speed as Fxx (xx: Blower speed number).
2. The control shall cycle through available speed number every time the left/right button is pressed.
3. When the center button is pressed, the current displayed speed shall stop flashing. Press the center

button again to select the option and the control shall immediately apply that blower setting and return to the corresponding main menu.

NOTE: Each furnace model contains different allowable gas heating speeds. Allowable gas heating speeds will be visible within gAF fan speed menu.

Heat Pump Heating Mode Speed Selection

To change the main blower speed in Heat Pump HEATING mode, follow the following steps:

1. Press left or right button until LED displays “HP1” (for single stage HP HEATING) or “HP2” (for Two stage HP HEATING). Press center button and the LED will display the currently selected speed number as Fxx (xx: Blower speed number from 1 to 9).
2. The control shall cycle through available fan speeds every time the left/right button is pressed. All 9 speeds are available for both Single and Two Stage HP HEATING.
3. When the center button is pressed, the current displayed speed shall be selected, and control shall apply the newly selected speed in next HP HEATING call.

THERMOSTAT CALL (OdS: Terminal)	AVAILABLE SPEEDS (HP1 menu)
1HP: Y1	F01
	F02
	F03
	F04
	F05
	F06
	F07
	F08
	F09

Single Stage HP Heating Speed Table

THERMOSTAT CALL (OdS: Terminal)	AVAILABLE SPEEDS (HP2 menu)
2HP: Y1 + Y2	F01
	F02
	F03
	F04
	F05
	F06
	F07
	F08
	F09

Two Stage HP Heating Speed Table

In general lower heating speeds will: reduce electrical consumption, lower operating sound levels of the blower, and increase the outlet air temperature delivered to the home. The speeds available allow the blower performance to be optimized for the particular homeowner’s needs.

On/Off Fan Delay Selection

To change the fan on or off delay for COOLING, HP HEATING & GAS HEATING modes, see the following steps:

1. Press left or right button until LED displays the desired on/off setting (See MAIN MENU section for selectable blower on/off delay options). Press center button and LED will display the selected on/off delay time in seconds.
2. The control shall cycle through available on/off delay times every time the left/right button is pressed.
3. When the center button is pressed, the current displayed on/off delay shall stop flashing. Press the center button again to select the option and the control shall immediately apply that delay setting and return to the corresponding main menu.

NORMAL SEQUENCE OF OPERATION

Power Up

The normal power up sequence is as follows:

- 115 VAC power applied to furnace.
- Integrated control module performs internal checks.
- LED will flash once at power up then remain on.
- Integrated control module monitors safety circuits continuously.
- Furnace awaits call from thermostat.

Heating Mode

The normal operational sequence in heating mode is as follows:

- R and W thermostat contacts close, initiating a call for heat.
- Integrated control module performs safety circuit checks.
- Induced draft blower is energized for 30 second pre-purge period causing pressure switch contacts to close.
- Igniter warm up begins after 15 second pre-purge expires.
- Gas valve opens at the end of igniter warm up period, delivering gas to burners and establishing flame.
- Integrated control module monitors flame presence. Gas valve will remain open only if flame is detected.
- Circulator blower is energized on high heat speed following a fixed 30 second blower on delay. Electronic air cleaner and humidifier terminal relays are energized with circulator blower.
- Furnace operates; integrated control module monitors safety circuits continuously.
- R and W thermostat contacts open, completing the call for heat.
- Gas valve closes, extinguishing flame.
- Induced draft blower is de-energized following a thirty second post purge.
- HUM terminal is de-energized.
- Circulator blower continues running for the selected

heat off delay period. Factory set at 150 seconds. If required this can be changed in the field.
- EAC terminal is de-energized.
- Furnace awaits next call from thermostat.

Cooling Mode

The control board support two stages of cooling. If this furnace is installed with a single stage cooling unit or heat pump, the Y1 terminal of the control board must be used. A Y2 call on the control board will be ignored if a Y1 call is not present.

COOLING MODE SEQUENCE OF OPERATION

1st Stage Cooling Mode Sequence:

- On a call for low stage cooling, the Y1 or Y1 and G thermostat contacts close signaling the furnace control board with 24 vac. on Y1 or Y1 and G terminals.
- The 7-Segment will display: 1 A C
- The compressor and condenser fan are energized.
- The circulator fan is energized at low cool speed after the cool on delay period. The electronic air cleaner EAC relay will close the EAC contacts.
- After the thermostat is satisfied, the compressor and condensor fan are de-energized and the Cool Mode Fan Off Delay period begins.
- Following the Cool Mode Fan Off Delay period, the indoor fan and air cleaner relays are de-energized.

2nd Stage Cooling Mode Sequence:

NOTE: A Y1 call must be present or a Y2 call will be ignored.

- On a call for 2nd stage cooling, the Y2 or Y2 and G thermostat contacts close signaling the furnace control board with 24 vac. on Y2 or Y2 and G terminals.
- The 7-Segment will display: 2 A C
- The compressor and condenser fan are energized.
- The circulator fan is energized at cool speed after a cool on delay. The electronic air cleaner EAC relay will close the EAC contacts.
- After the thermostat is satisfied, the compressor and condensor fan are de-energized and the Cool Mode Fan Off Delay period begins.
- Following the Cool Mode Fan Off Delay period, the indoor fan and air cleaner relays are de-energized.

HEAT PUMP MODE

1st Stage HP Heating Mode Sequence:

- On a call for low stage HP Heating, the Y1 or Y1 and G thermostat contacts close signaling the furnace control board with 24 vac. on Y1 or Y1 and G terminals.
- The 7-Segment will display: 1 H P
- The compressor and condenser fan are energized.
- The circulator fan is energized at HP1 fan speed after the HP on delay period. The electronic air cleaner, EAC, and humidifier, HUM, relays will close the contacts.
- After the thermostat is satisfied, the compressor and condensor fan are de-energized and the electronic air cleaner EAC and humidifier HUM relays de-energize. The HP Heat Mode Fan Off Delay period begins.
- Following the HP Heat Mode Fan Off Delay period, the indoor fan, EAC, & HUM relays are de-energized.

2nd Stage HP Heating Mode Sequence:

NOTE: A Y1 call must be present or a Y2 call will be ignored.

- On a call for 2nd stage HP Heating, the Y2 or Y2 and G thermostat contacts close signaling the furnace control board with 24 vac. on Y2 or Y2 and G terminals.
- The 7-Segment will display: 2 H P
- The compressor and condenser fan are energized.
- The circulator fan is energized at HP2 fan speed after the HP on delay period. The electronic air cleaner EAC and humidifier HUM relays will close the contacts.
- After the thermostat is satisfied, the compressor and condensor fan are de-energized and the electronic air cleaner EAC and humidifier HUM relays de-energize. The HP Heat Mode Fan Off Delay period begins.
- Following the HP Heat Mode Fan Off Delay period, the indoor fan, EAC, & HUM relays are de-energized.

Fan Only Mode

The normal operational sequence in fan only mode is as follows:

- R and G thermostat contacts close, initiating a call for fan.
- Integrated control module performs safety circuit checks.
- Circulator blower is energized on heat speed.
- EAC terminal is energized.
- Circulator blower runs, integrated control module monitors safety circuits continuously.
- R and G thermostat contacts open, completing the call for fan.
- Circulator blower is de-energized.
- EAC terminal is de-energized.
- Furnace awaits next call from thermostat.

Defrost Mode

Defrost call can only be generated with heat pump outdoor unit properly configured in the OdS menu.

- On a call for Defrost, the Y1 or Y1 with Y2 with/ without O contacts and W thermostat contacts close signaling the furnace control board to enter defrost.
- If Y with O and W are present simultaneously, the blower shall be energized at Cooling Speed after COOL on delay, then, switch the blower speed to the Greater of (Cooling Speed or Gas Heat speed) after Gas Heat On Delay expired.
- If Y without O and W are present simultaneously, the blower shall be energized at HP Heat Speed after HP Heat On Delay, then, switch the blower speed to the Greater of (HP Heat Speed or Gas Heat speed) after Gas Heat On Delay expired.
- The 7-Segment will display: d F t
- The electronic air cleaner EAC and humidifier HUM relays will close the contacts.
- After the thermostat is satisfied, the gas valve will de-energize. The Gas Heat Mode Fan Off Delay period begins.
- Following the Gas Heat Mode Fan Off Delay period, the indoor fan, EAC, & HUM relays are de-energized.

OPERATIONAL CHECKS

The burner flames should be inspected with the burner compartment door installed. Flames should be stable, quiet, soft, and blue (dust may cause orange tips but they must not be yellow). Flames should extend directly outward from the burners without curling, floating, or lifting off. Flames must not impinge on the sides of the heat exchanger firing tubes.

SAFETY CIRCUIT DESCRIPTION

WARNING

Do not bypass safety devices.

A number of safety circuits are employed to ensure safe and proper furnace operation. These circuits serve to control any potential safety hazards and serve as inputs in the monitoring and diagnosis of abnormal function. These circuits are continuously monitored during furnace operation by the integrated control module.

Integrated Control Module

The integrated control module is an electronic device which, if a potential safety concern is detected, will take the necessary precautions and provide diagnostic information through an LED.

Primary Limit

The primary limit control is located on the partition panel and monitors heat exchanger compartment temperatures. It is a normally-closed (electrically), automatic reset, temperature-activated sensor. The limit guards against overheating as a result of insufficient conditioned air passing over the heat exchanger.

Auxiliary Limit

The auxiliary limit controls are located on or near the circulator blower and monitors blower compartment temperatures. They are a normally-closed (electrically), automatic reset, temperature-activated sensor. These limits guard against overheating as a result of insufficient conditioned air passing over the heat exchanger.

Burner Temperature Switch

The burner temperature switch is mounted on the burner assembly to monitor the burner box temperature. It is normally closed (electrically), auto-reset sensor. This switch guards against the burner flames not being properly drawn into the heat exchanger.

Pressure Switches

The pressure switches are normally-open (closed during operation) negative air pressure-activated switches. They monitor the airflow (combustion air and flue products) through the heat exchanger via pressure taps located on the induced draft blower and the coil front cover. These switches guard against insufficient airflow (combustion air and flue products) through the heat exchanger and/or blocked condensate drain conditions.

Flame Sensor

The flame sensor is a probe mounted to the burner assembly which uses the principle of flame rectification to determine the presence or absence of flame.

Pressure Sensor

Pressure sensor is mounted on the induced draft blower. Its function is to regulate the induced draft blower's speed in order to maintain proper air-fuel ratio for clean and reliable combustion.

TROUBLESHOOTING

WARNING

HIGH VOLTAGE!
To prevent property damage, personal injury or death die to electrical shock, disconnect electrical power to the furnace BEFORE removing the filter or performing any other maintenance.



Diagnostic Chart

Refer to the troubleshooting chart in the Appendix for assistance in determining the source of unit operational problems. The 3 digit diagnostic display provides alarm codes to assist in troubleshooting the unit.

Fault Code Retrieval

The ignition control is equipped with push buttons that can be used to view the last 10 faults detected by the control. Press the left or right button until F10 is displayed. Press the center button to view stored faults.

Clear Fault Memory

To clear all alarm codes, navigate to the last 10 faults menu, F10, and hold the option button down for 5 to 30 seconds.

Resetting From Lockout

WARNING

To avoid personal injury due to electrical shock, turn off power to the furnace before changing speed taps.

Furnace lockout results when a furnace is unable to achieve ignition after three attempts during a single call for heat. It is characterized by a non-functioning furnace and a fault code displayed. If the furnace is in “lockout”, it will (or can be) reset in any of the following ways.

1. Automatic reset. The integrated control module will automatically reset itself and attempt to resume normal operations following a one hour lockout period.
2. Manual power interruption. Interrupt 115 volt power to the furnace.

NOTE: If the condition which originally caused the lockout still exists, the control will return to lockout. Refer to the *Troubleshooting Chart* for aid in determining the cause.

MAINTENANCE

WARNING

HIGH VOLTAGE!
To avoid personal injury or death due to electrical shock, disconnect electrical power BEFORE performing any service or maintenance.



Annual Inspection

The furnace should be inspected by a qualified installer, or service agency at least once per year. This check should be performed at the beginning of the heating season. This will ensure that all furnace components are in proper working order and that the heating system functions appropriately. Pay particular attention to the following items. Repair or service as necessary.

- Flue pipe system: Check for blockage and/or leakage. Check the outside termination and the connections at and internal to the furnace.
- Heat exchanger. Check for corrosion and/or buildup within the heat exchanger passageways.
- Burners. Check for proper ignition, burner flame, and flame sense.
- Drainage system. Check for blockage and/or leakage. Check hose connections at and internal to furnace.
- Wiring. Check electrical connections for tightness and/or corrosion. Check wires for damage.
- Filters.
- R-32 Sensor Wire. Check R-32 sensor wire connection for tightness and check wire for damage.

FILTERS

Filter Maintenance
Improper filter maintenance is the most common cause of inadequate heating or cooling performance. Filters should be cleaned (permanent) or replaced (disposable) every two months or as required. When replacing a filter, it must be replaced with a filter of the same type and size.

Filter Removal
Depending on the installation, differing filter arrangements can be applied. Filters can be installed in either the central return register or a side panel external filter rack (upflow only). A media air filter or electronic air cleaner can be used as an alternate filter. Follow the filter sizes given in the Recommended Minimum Filter size table 7 on page 27 to ensure proper unit performance.

To remove filters from an external filter rack in an upright upflow installation, follow the directions provided with external filter rack kit.

Horizontal Unit Filter Removal
Filters in horizontal installations are located in the central return register or the ductwork near the furnace.

To remove:
1. Turn OFF electrical power to furnace.
2. Remove filter(s) from the central return register or ductwork.
3. Replace filter(s) by reversing the procedure for removal.
4. Turn ON electrical power to furnace.

Media Air Filter or Electronic Air Cleaner Removal
Follow the manufacturer's directions for service.

Burner
The Ultra Low NOx furnace uses a premix burner. The burner box is sealed to achieve safe and reliable operation.

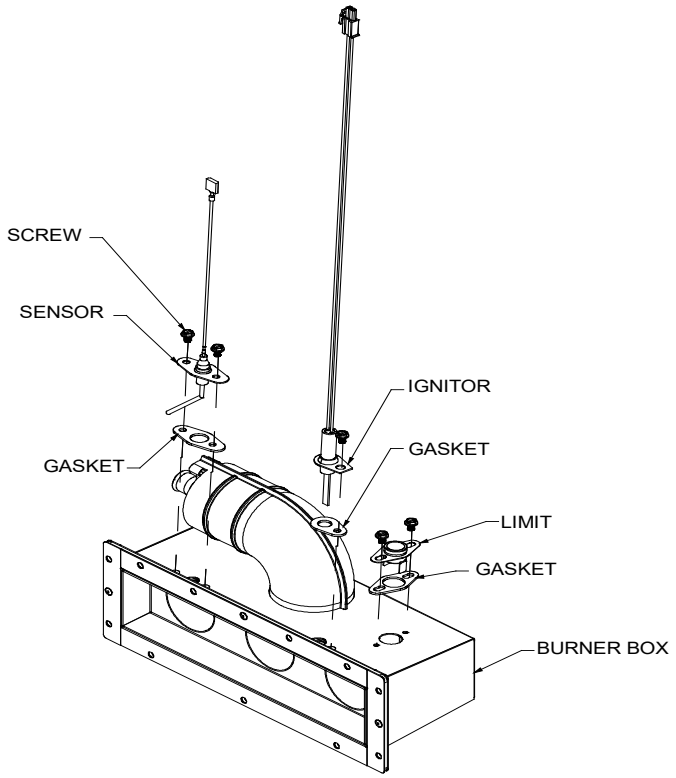

Burner Box
Figure 40

Induced Draft and Circulator Blowers
The bearings in the induced draft blower and circulator blower motors are permanently lubricated by the manufacturer. No further lubrication is required. Check motor windings for accumulation of dust which may cause overheating. Clean as necessary.

Condensate Trap and Drain System (Qualified Servicer Only)
Annually inspect the drain tubes, drain trap, and field-supplied drain line for proper condensate drainage. Check drain system for hose connection tightness, blockage, and leaks. Clean or repair as necessary.

Flame Sensor (Qualified Servicer Only)
Under some conditions, the fuel or air supply can create a nearly invisible coating on the flame sensor. This coating acts as an insulator causing a drop in the flame sense signal. If the flame sense signal drops too low the furnace will not sense flame and will lock out. The flame sensor should be carefully cleaned by a qualified servicer using emery cloth or steel wool. Following cleaning, the flame sense signal should be as indicated in the Specifications Sheet.

Flue Passages (Qualified Servicer Only)
The heat exchanger flue passageways should be inspected at the beginning of each heating season.

BEFORE LEAVING AN INSTALLATION

- Cycle the heating, cooling and fan only operations to verify each operation is working properly.
- Review the Owner's Manual with the homeowner and discuss proper furnace operation and maintenance.
- Leave literature packet near furnace.

REPAIR AND REPLACEMENT PARTS

- When ordering any of the listed functional parts, be sure to provide the furnace model, manufacturing, and serial numbers with the order.
- Although only functional parts are shown in the parts list, all sheet metal parts, doors, etc. may be ordered by description.
- Parts are available from your distributor.

FUNCTIONAL PARTS LIST-

Gas Valve
Gas Manifold
Natural Gas Orifice
Igniter
Flame Sensor
Burner Temperature Switch
Primary Limit Switch
Coil Front Cover
Auxiliary Limit Switch
Transformer
Door Switch
Induced Draft Blower
Blower Motor
Blower Wheel
Blower Mounting Bracket
Blower Cutoff
Blower Housing
Pressure Switches
Burner Assembly
Drain Trap
Burner Box Gasket
Integrated Control Module
Pressure Sensor

TROUBLESHOOTING CHART

Symptom	LED Status	Fault Description	Corrective Actions
Normal operation	I dL	Normal operation	None
Furnace fails to operate	EEE	Internal Faults or IRQ Loss in Control Board	Replace integrated control board
Furnace fails to operate	EE0	Furnace lockout due to an excessive number of ignition “retries” (3 total) Failure to establish flame Loss of flame after establishment	Locate and correct gas interruption Check front cover pressure switch operation and verify proper drainage (hose, wiring, contact operation), correct if necessary Replace or realign igniter Check flame sense signal, clean sensor if coated or oxidized Check flue piping for blockage, proper length, elbows, and termination Verify proper induced draft blower performance
Furnace fails to operate	EE1	Pressure switch circuit is closed at start of heating cycle Pressure switch contacts sticking Short in pressure switch circuit wiring	Replace low stage pressure switch Repair short in wiring
Induced draft blower runs continuously with no furnace operation	EE2	Pressure switch circuit is not closed Pressure switch hose blocked pinched, or connected improperly Blocked flue and/or inlet air pipe, blocked drain system or weak induced draft blower Incorrect pressure switch set point or malfunctioning switch contacts Loose or improperly connected wiring	Inspect pressure switch hose, repair/replace if necessary Inspect flue and/or inlet air piping for blockage, proper length, elbows, and termination Check drain system, correct as necessary Check induced draft blower performance, correct as necessary Check pressure switch operation, replace as needed Tighten or correct wiring connection
Circulator blower runs continuously No furnace operation	EE3	Primary limit circuit is open Insufficient conditioned air over the heat exchanger Blocked filters, restrictive ductwork, improper circulator blower speed, or failed circulator blower motor Loose or improperly connected wiring in high limit circuit	Check filters and ductwork for blockage Clean filters or remove obstruction Check circulator blower speed and performance Correct speed or replace blower motor if necessary Tighten or correct wiring connection
Induced draft blower and circulator blower runs continuously No furnace operation	EE4	Flame sensed with no call for heat Short to ground in flame sense circuit Lingering burner flame Slow closing gas valve	Correct short at flame sensor or in flame sensor wiring Check for lingering or lazy flame Verify proper operation of gas valve
No furnace operation	EE5	Open fuse Short in low voltage wiring	Replace fuse Locate and correct short in low voltage wiring

TROUBLESHOOTING CHART

Symptom	LED Status	Fault Description	Corrective Actions
Normal furnace operation	EE6	Flame sense micro amp signal is minimal Flame sensor is coated/oxidized Flame sensor incorrectly positioned in burner fame Lazy burner flame due to improper gas pressure or combustion air	Clean flame sensor if coated or oxidized Inspect for proper flame sensor alignment Check inlet air piping for blockage, proper length, elbows, and termination Compare current gas pressure to rating plate and adjust as needed
Furnace fails to operate	EEA	Polarity of 115 volt AC is reversed Poor unit ground	Correct polarity, check and correct wiring if necessary Verify proper ground, correct if necessary
Furnace fails to operate	E10	Grounding fault Poor neutral connection	Verify neutral wire connection to furnace & continuity to ground source
Furnace fails to operate	E11	Burner limit switch circuit is Open	Check for correct gas pressure Check for correct burner alignment Check for and correct burner restriction Check burner temperature switch, replace if necessary
Furnace fails to operate	E12	Reduntent relay open alarm	Replace integrated control board
Furnace fails to operate	E13	Reduntent relay stuck closed alarm	Replace integrated control board
Furnace fails to operate	EEb	Gas valve is not energized when it should be External Gas Valve Error	Check wiring in gas valve circuit Replace integrated control board
Furnace fails to operate	EEC	Gas valve is energized when it should not be Internal gas valve error	Check wiring in gas valve circuit Replace integrated control board
Circulator blower runs continuously No furnace operation	EEd	Auxiliary limit circuit is open Blocked filters, restrictive ductwork, improper circulator blower speed, or failed circulator blower motor Loose or improperly connected wiring in high limit circuit	Check filters and ductwork for blockage Clean filters or remove obstruction Correct speed or replace blower motor if necessary Tighten or correct wiring connection
Furnace fails to operate	EbF	Inducer communication alarm	Check Red, Black, White harness & connections to inducer & control board
Furnace fails to operate	E1b	Analog Pressure Sensor reference error	Check Red, Black, White harness & connections to inducer & control board Replace pressure sensor
Furnace fails to operate	E1C	Analog Pressure Sensor null error	Check Red, Black, White harness & connections to inducer & control board Check pressure hoses to pressure sensor and pressure switch

TROUBLESHOOTING CHART

Symptom	LED Status	Fault Description	Corrective Actions
Furnace fails to operate	E1d	Analog Pressure Sensor span error	Check Red, Black, White harness & connections to inducer & control board Check pressure hoses to pressure sensor and pressure switch
Furnace fails to operate	E1E	Analog Pressure Sensor pressure error	Check Red, Black, White harness & connections to inducer & control board Replace pressure sensor
Furnace fails to operate	E1F	Analog Pressure Sensor input error	Check Red, Black, White harness & connections to inducer & control board Replace pressure sensor
Twinning feature not working	EEH	TWIN Error	Check for wiring connections. Replace integrated control board
Furnace fails to operate and goes to hard lockout	EbL	Main blower motor is consuming very little current after heat on delay, below an expected value	Check for loose motor wiring connections. Verify the blower motor voltage, amps and proper speed setting. If blower motor is not operating correctly, replace the motor.
Furnace fails to operate and goes to hard lockout	EbU	Main blower motor is consuming too much current during inducer pre-purge, above an expected value.	Verify wiring connections to and from motor are not loose. Verify that line voltage wires to the control and the main blower motor are not reversed at the control.
Furnace fails to operate	Ed0	No Shared data	Populate shared data set using BTPIM01
Furnace stops heating and only the fan is operating	EAF	Furnace has lost communication with the R-32 sensor and the furnace is in mitigation mode.	Verify wire connection to R-32 sensor is not loose. Verify that the R-32 sensor wire is not damaged. Replace R-32 Sensor.
Furnace stops heating and only the fan is operating	EAL	R-32 sensor has detected a refrigerant leak and furnace is in mitigation mode.	Investigate the indoor coil for a refrigerant leak. Furnace will resume normal operation once a leak is not detected and the 5 minute delay period is over.
Furnace stops heating and only the fan is operating	EAS	R-32 sensor has detected a fault and the furnace is in mitigation mode.	Investigate the R-32 sensor. Replace the R-32 sensor.
Furnace stops heating and only the fan is operating	Ear	A2L relay in the furnace control board has detected a fault and the furnace is in mitigation mode.	Investigate A2L relay. Cycle power on the furnace. Replace integrated control board.
Furnace fails to operate. Integrated control module LED display provides no signal	None	No 115 power to furnace or no 24 volt power to integrated control module. Blown fuse or tripped circuit breaker Integrated control module is non- functional	Restore high voltage power to furnace and integrated control module. Correct condition which caused fuse to open, replace fuse Replace non-functional integrated control module.

AIRFLOW

AR9S96-U / GR9S96-U COOLING & CIRCULATION AIRFLOW													
MODEL	THERMOSTAT CALL	TAP #	EXTERNAL STATIC PRESSURE, (INCHES WATER COLUMN)											
			0.10	0.20	0.30	0.40	0.50		0.60		0.70		0.80	
			CFM	CFM	CFM	CFM	CFM	WATTS	CFM	WATTS	CFM	WATTS	CFM	WATTS
R9S960403BU	Y1 / Y2 / G	F01	714	667	620	573	528	100	483	106	439	111	394	117
		F02	841	803	765	725	686	139	645	145	605	151	565	157
		F03	862	823	784	745	706	144	666	151	626	158	586	165
		F04	1043	1011	976	945	912	219	879	227	845	235	810	243
		F05^	1080	1051	1021	990	961	246	932	255	903	262	867	270
		F06	1182	1155	1129	1102	1075	298	1048	307	1020	316	992	325
		F07	1193	1164	1136	1108	1080	306	1052	315	1025	324	997	334
		F08^^	1280	1256	1231	1206	1183	370	1156	378	1132	388	1107	398
		F09	1333	1306	1280	1255	1231	399	1205	408	1180	417	1155	427
R9S960603BU	Y1 / Y2 / G	F01	767	712	655	592	528	101	476	107	431	113	388	118
		F02	919	871	824	774	723	149	665	156	612	163	565	170
		F03	925	889	842	797	748	153	693	160	636	169	589	176
		F04^	1099	1060	1018	977	935	222	891	230	848	239	803	248
		F05	1125	1086	1047	1008	970	235	931	244	885	253	844	262
		F06	1239	1200	1163	1127	1095	290	1053	296	1014	305	974	314
		F07^^	1317	1283	1249	1214	1179	350	1146	361	1110	372	1073	383
		F08	1337	1304	1269	1235	1206	353	1167	362	1133	371	1097	382
		F09	1415	1383	1353	1321	1288	387	1256	397	1222	407	1190	418
R9S960805CU	Y1 / Y2 / G	F01	999	934	877	814	740	143	681	153	615	160	554	167
		F02	1297	1245	1194	1143	1096	238	1044	247	991	257	933	267
		F03	1407	1354	1307	1257	1210	285	1164	297	1118	308	1067	319
		F04^	1532	1488	1440	1396	1352	344	1304	356	1259	367	1210	378
		F05^^	1641	1594	1552	1509	1477	409	1425	418	1388	432	1347	444
		F06	1687	1644	1604	1560	1519	439	1479	453	1441	467	1409	484
		F07	1831	1791	1755	1718	1680	544	1642	558	1607	573	1570	589
		F08	1895	1860	1822	1788	1753	601	1716	616	1684	633	1650	650
		F09	2298	2260	2222	2182	2149	920	2114	934	2087	946	2022	1889

Default speed is F01 for circulation for all models

^ Default Y1 speed

^^ Default Y2 speed

NOTE: Watts provided are blower motor watts. Undersized duct size may affect the blower watts performance

AR9S96-U / GR9S96-U HEATING AIFLOW

MODEL	THERMOSTAT CALL	TAP #	EXTERNAL STATIC PRESSURE, (INCHES WATER COLUMN)													TEMP RANGE
			0.10		0.20		0.30		0.40		0.50		0.60	0.70	0.80	
			CFM	RISE	CFM	RISE	CFM	RISE	CFM	RISE	CFM	RISE	CFM	CFM	CFM	
R9S960403BU	W/W1	F04^	1043	34	1011	35	976	36	945	38	912	39	879	845	810	15 - 45
		F05	1080	33	1051	34	1021	35	990	36	961	37	932	903	867	
R9S960603BU	W/W1	F04	1099	49	1060	50	1018	52	977	55	935	57	891	848	803	30 - 60
		F05	1125	47	1086	49	1047	51	1008	53	970	55	931	885	844	
		F06^	1239	43	1200	44	1163	46	1127	47	1095	49	1053	1014	974	
R9S960805CU	W/W1	F03	1407	51	1354	53	1307	54	1257	57	1210	59	1164	1118	1067	30 - 60
		F04^	1532	46	1488	48	1440	49	1396	51	1352	53	1304	1259	1210	

^ DEFAULT HEATING SPEED

WIRING DIAGRAM

*R9S96**

WARNING

HIGH VOLTAGE!
Disconnect ALL power before servicing or installing this unit. Multiple power sources may be present. Failure to do so may cause property damage, personal injury or death.

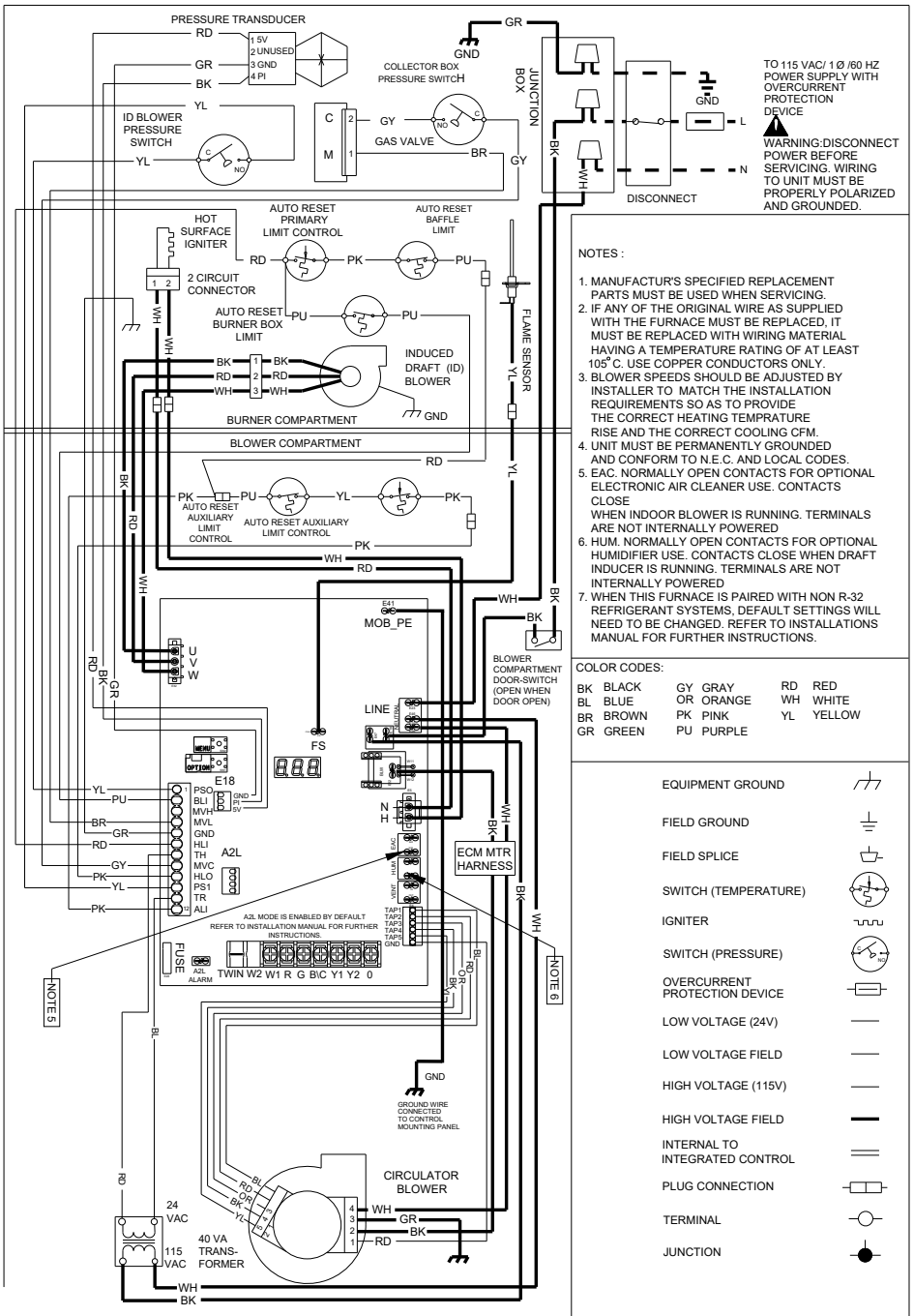

NOTES :

1. MANUFACTUR'S SPECIFIED REPLACEMENT PARTS MUST BE USED WHEN SERVICING.
2. IF ANY OF THE ORIGINAL WIRE AS SUPPLIED WITH THE FURNACE MUST BE REPLACED, IT MUST BE REPLACED WITH WIRING MATERIAL HAVING A TEMPERATURE RATING OF AT LEAST 105°C. USE COPPER CONDUCTORS ONLY.
3. BLOWER SPEEDS SHOULD BE ADJUSTED BY INSTALLER TO MATCH THE INSTALLATION REQUIREMENTS SO AS TO PROVIDE THE CORRECT HEATING TEMPRATURE RISE AND THE CORRECT COOLING CFM.
4. UNIT MUST BE PERMANENTLY GROUNDED AND CONFORM TO N.E.C. AND LOCAL CODES.
5. EAC. NORMALLY OPEN CONTACTS FOR OPTIONAL ELECTRONIC AIR CLEANER USE. CONTACTS CLOSE WHEN INDOOR BLOWER IS RUNNING. TERMINALS ARE NOT INTERNALLY POWERED
6. HUM. NORMALLY OPEN CONTACTS FOR OPTIONAL HUMIDIFIER USE. CONTACTS CLOSE WHEN DRAFT INDUCER IS RUNNING. TERMINALS ARE NOT INTERNALLY POWERED
7. WHEN THIS FURNACE IS PAIRED WITH NON R-32 REFRIGERANT SYSTEMS, DEFAULT SETTINGS WILL NEED TO BE CHANGED. REFER TO INSTALLATIONS MANUAL FOR FURTHER INSTRUCTIONS.

COLOR CODES:

BK	BLACK	GY	GRAY	RD	RED
BL	BLUE	OR	ORANGE	WH	WHITE
BR	BROWN	PK	PINK	YL	YELLOW
GR	GREEN	PU	PURPLE		

EQUIPMENT GROUND
FIELD GROUND
FIELD SPLICE
SWITCH (TEMPERATURE)
IGNITER
SWITCH (PRESSURE)
OVERCURRENT PROTECTION DEVICE
LOW VOLTAGE (24V)
LOW VOLTAGE FIELD
HIGH VOLTAGE (115V)
HIGH VOLTAGE FIELD
INTERNAL TO INTEGRATED CONTROL
PLUG CONNECTION
TERMINAL
JUNCTION

STATUS & FAULT (SEE INSTALLATION MANUAL FOR COMPLETE LIST OF FAULTS)	SEVEN SEGMENT DISPLAY		
	Seg. 1	Seg. 2	Seg. 3
IDLE	I	d	L
CONTINIOUS FAN	F	A	n
LOW STAGE COOLING	1	A	C
HIGH STAGE COOLING	2	A	C
GAS HEAT		g	H
HEAT PUMP HEAT, LOW STAGE	1	H	P
HEAT PUMP HEAT, HIGH STAGE	2	H	P
DEFROST	d	F	t
LOCKOUT DUE TO EXCESSIVE RETRIES RECYCLE	E	E	0
PRESSURE SWITCH CLOSED WHEN ECPECTED TO BE OPEN	E	E	1
PRESSURE SWITCH OPEN WHEN EXPECTED TO BE CLOSED	E	E	2
OPEN HIGH LIMIT SWITCH	E	E	3
FLAME DETECTED WHEN NO FLAME SHOULD BE PRESENT	E	E	4
OPEN FUSE	E	E	5
LOW FLAME SIGNAL	E	E	6
IGNITOR FAULT OR IGNITOR RELAY FAULT	E	E	7
REVERSED LINE POLARITY	E	E	A
GROUNDING ERROR	E	1	0
INTERNAL GAS VALVE ERROR	E	E	b
EXTERNAL GAS VALVE ERROR	E	E	C

STATUS & FAULT (SEE INSTALLATION MANUAL FOR COMPLETE LIST OF FAULTS)	SEVEN SEGMENT DISPLAY		
	Seg. 1	Seg. 2	Seg. 3
AUXILLIARY LIMIT SWITCH OPEN	E	E	d
BURNER LIMIT SWITCH OPEN	E	1	I
LOW CIRCULATOR CURRENT	E	b	L
CIRCULATOR CURRENT UNEXPECTED	E	b	U
A2L COMMUNICATION ALARM	E	A	F
A2L LEAKAGE ALARM	E	A	L
A2L INTERNAL ALARM	E	A	S
A2L RELAY ALARM	E	A	r

0140F20035-A

START-UP CHECKLIST

Furnace				
	Model Number	_____		
	Serial Number	_____		
ELECTRICAL				
Line Voltage (Measure **L1 to N** and **N to Ground** Voltage)	L - N	_____		
	N - G	_____		
Secondary Voltage (Measure Transformer Output Voltage)	R - C	_____		
Blower Amps		_____		
BLOWER EXTERNAL STATIC PRESSURE				
Return Air Static Pressure		_____	IN. W.C.	
Supply Air Static Pressure		_____	IN. W.C.	
Total External Static Pressure (Ignoring +/- from the reading above, add total here)		_____	IN. W.C.	
TEMPERATURES				
Return Air Temperature (Dry bulb / Wet bulb)		_____	DB °F	_____ WB °F
Cooling Supply Air Temperature (Dry bulb / Wet bulb)		_____	DB °F	_____ WB °F
Heating Supply Air Temperature		_____	DB °F	
Temperature Rise		_____	DB °F	
Delta T (Difference between Supply and Return Temperatures)		_____	DB °F	
GAS PRESSURES				
Gas Inlet Pressure		_____	IN. W.C.	
Gas Manifold Pressure (Low Fire)		_____	IN. W.C.	
Gas Manifold Pressure (High Fire)		_____	IN. W.C.	
Gas Type (NG) = Natural Gas / (LP) = Liquid Propane		_____		
Additional Checks				
Check wire routings for any rubbing		_____		
Check for kinked pressure switch tubing.		_____		
Check flue elbow for alignment and clamp tightness.		_____		
Check screw tightness on blower wheel.		_____		
Check factory wiring and wire connections.		_____		
Check product for proper clearances as noted by installation instructions		_____		
Check R-32 sensor wire is connected properly (if applicable)		_____		
°F to °C formula: (°F - 32) divided by 1.8 = °C **°C to °F formula: (°C multiplied by 1.8) + 32 = °F**				

THIS PAGE INTENTIONALLY LEFT BLANK

THIS PAGE INTENTIONALLY LEFT BLANK

CUSTOMER FEEDBACK

We are very interested in all product comments.
Please fill out the feedback on one of the following links:
Goodman® Brand Products: (http://www.goodmanmfg.com/about/contact-us).
Amana® Brand Products: (http://www.amana-hac.com/about-us/contact-us).
You can also scan the QR code on the right for the product brand you purchased to be directed to the feedback page.

GOODMAN® BRAND AMANA® BRAND

19001 Kermier Rd., Waller, TX 77484
www.goodmanmfg.com • www.amana-hac.com
© 2024-2025 Daikin Comfort Technologies Manufacturing, L.P.
Amana® is a registered trademark of Maytag Corporation or its related companies and is used under license. All rights reserved.