Installation Instructions for *R9S96/*D9S96 & *R9S92 Single-Stage Gas Furnace

(Type FSP CATEGORY IV Direct or Non Direct Vent Air Furnace)

(Type FSP CATÉGORIE IV Direct ou four á air soufflé non direct)

These furnaces comply with requirements embodied in the American National Standard / National Standard of Canada ANSI Z21.47·CSA-2.3 Gas Fired Central Furnaces.

Intertek

Installer: Affix all manuals adjacent to the unit.

As a professional installer you have an obligation to know the product better than the customer. This includes all safety precautions and related items.

Prior to actual installation, thoroughly familiarize yourself with this Instruction Manual. Pay special attention to all safety warnings. Often during installation or repair it is possible to place yourself in a position which is more hazardous than when the unit is in operation.

Remember, it is your responsibility to install the product safely and to know it well enough to be able to instruct a customer in its safe use.

Safety is a matter of common sense...a matter of thinking before acting. Most dealers have a list of specific good safety practices...follow them.

The precautions listed in this Installation Manual are intended as supplemental to existing practices. However, if there is a direct conflict between existing practices and the content of this manual, the precautions listed here take precedence.

WARNING

This furnace may be paired with a cooling unit that uses R-32 refrigerant. If the cooling unit paired with this furnace does not use R-32, the R-32 function in the furnace control board needs to be turned off. please see the electrical and the R-32 sections for more details.

Refrigerant systems other than 410A or R32 may require an additional mitigation control board. Refer to the installation manual of the indoor evaporator coil to determine installation requirements for that supplier's refrigerant detection system.

RECOGNIZE THIS SYMBOL AS A SAFETY PRECAUTION.

***NOTE: Please contact your distributor or our website for the applicable Specification Sheet referred to in this manual.**

WARNING

Only personnel that have been trained to install, adjust, service, maintenance or repair (hereinafter, "service") the equipment specified in this manual should service the equipment.
This equipment is not intended for use by persons (including children) with reduced physical, sensory or mental capacities, or lack of experience and knowledge, unless they have been given supervision or instruction concerning use of the appliance by a person responsible for their safety.
Children should be supervised to ensure that they do not play with the equipment.
The manufacturer will not be responsible for any injury or property damage arising from improper supervision, service or service procedures. If you service this unit, you assume responsibility for any injury or property damage which may result. In addition, in jurisdictions that require one or more licenses to service the equipment specified in this manual, only licensed personnel should service the equipment. Improper supervision, installation, adjustment, servicing, maintenance or repair of the equipment specified in this manual, or attempting to install, adjust, service or repair the equipment specified in this manual without proper supervision or training may result in product damage, property damage, personal injury or death.

WARNING

Do not bypass safety devices.

90% HEX



DO NOT LIFT PRODUCT USING HEAT EXCHANGER

19001 Kermier Rd. Waller, TX 77484
www.goodmanmfg.com • www.amana-hac.com
© 2023 Daikin Comfort Technologies Manufacturing, L.P.

IOG-2037A
09/2023

Amana is a registered trademark of Maytag Corporation or its related companies and is used under license.
All rights reserved.

TABLE OF CONTENTS

Safety Considerations 2
Electrostatic Discharge (ESD) Precautions 3
To the Installer 4
Product Application 4
Location Requirements & Considerations 6
Clearances and Accessibility 7
Combustion & Ventilation Requirements 8
Installation Positions 8
Horizontal Applications & Considerations 10
Materials - Installations in the U.S.A. 11
Materials - Installations in Canada 11
Pip Installation 11
Combustion Air Pipe Connection 13
Vent/Intake Terminations for Installation of multiple direct vent furnaces 17
Condensate Drain Lines & Drain Trap 17
Electrical Connections 22
R-32 Information 26
Gas Supply and Piping 26
High Altitude Installation 27
Circulating air & filters 30
Startup Procedure & Adjustment 33
Gas Supply Pressure Measurement 35
Operational Checks 37
Safety Circuit Description 37
Maintenance 38
Filters 38
Before Leaving an Installation 39
Repair and Replacement Parts 39
Status codes 40
Troubleshooting 41
Airflow Tables - *D9S96 44
Airflow Tables - *R9S92 46
Airflow Tables - *R9S96 48
Wiring Diagram 50
Special Instructions for Products Installed in the State of Massachusetts 51
Start-Up Checklist 52

SAFETY CONSIDERATIONS

Adhere to the following warnings and cautions when installing, adjusting, altering, servicing, or operating the furnace. To ensure proper installation and operation, thoroughly read this manual for specifics pertaining to the installation and application of this product.

This furnace is manufactured for use with natural gas. It may be field converted to operate on L.P. gas by using the appropriate L.P. conversion kit listed in the **PROPANE GAS/HIGH ALTITUDE INSTALLATIONS** section of this manual

Install this furnace only in a location and position as specified in **LOCATION REQUIREMENTS & CONSIDERATIONS** section and **INSTALLATION POSITIONS** section of this manual.

Provide adequate combustion and ventilation air to the furnace as specified in **COMBUSTION & VENTILATION AIR REQUIREMENTS** section of this manual.

Combustion products must be discharged to the outdoors. Connect this furnace to an approved vent system only, as specified in **VENT/FLUE PIPE & COMBUSTION AIR PIPE** section of this manual.
Never test for gas leaks with an open flame. Use a commercially available soap solution made specifically for the detection of leaks to check all connections, as specified in **GAS SUPPLY AND PIPING** section of this manual.

Always install a furnace to operate within the furnace's intended temperature-rise range with a duct system which has external static pressure within the allowable range, as specified on the furnace rating plate and **OPERATIONAL CHECKS** section of these instructions.

When a furnace is installed so that supply ducts carry air circulated by the furnace to areas outside the space containing the furnace, the return air shall also be handled by duct(s) sealed to the furnace casing and terminating outside the space containing the furnace.

A gas-fired furnace for installation in a residential garage must be installed as specified in the **LOCATION REQUIREMENTS AND CONSIDERATIONS** section of this manual.

This furnace may be used as a construction site heater only if certain conditions are met. These conditions are listed in the **PRODUCT APPLICATION** section of this manual.

CAUTION

FROZEN AND BURST WATER PIPE HAZARD
Failure to protect against the risk of freezing may result in property damage. Special precautions MUST be made if installing furnace in an area which may drop below freezing. This can cause improper operation or damage to equipment. If the furnace environment has the potential of freezing, the drain trap and drain line must be protected. The use of accessory drain trap heaters, electric heat tape and/or RV antifreeze is recommended for these installations.

WARNING

To prevent personal injury or death due to improper installation, adjustment, alteration, service, or maintenance, refer to this manual. For additional assistance or information, consult a qualified installer, servicer agency or the gas supplier.

WARNING

HEATING UNIT SHOULD NOT BE UTILIZED WITHOUT REASONABLE ROUTINE, INSPECTION, MAINTENANCE AND SUPERVISION. IF THE BUILDING IN WHICH ANY SUCH DEVICE IS ROUTINELY INSPECTED, MAINTAINED AND MONITORED. IN THE EVENT THAT THE BUILDING MAY BE EXPOSED TO FREEZING TEMPERATURES AND WILL BE VACANT, ALL WATER-BEARING PIPES SHOULD BE DRAINED. THE BUILDING SHOULD BE PROPERLY WINTERIZED AND THE WATER SOURCE CLOSED. IN THE EVENT THAT THE BUILDING MAY BE EXPOSED TO FREEZING TEMPERATURES AND WILL BE VACANT, ANY HYDRONIC COIL UNITS SHOULD BE DRAINED AS WELL AND, IN SUCH CASE, ALTERNATIVE HEAT SOURCES SHOULD BE UTILIZED.

WARNING

IF THE INFORMATION IN THESE INSTRUCTIONS IS NOT FOLLOWED EXACTLY, A FIRE OR EXPLOSION MAY RESULT CAUSING PROPERTY DAMAGE, PERSONAL INJURY OR LOSS OF LIFE.

– DO NOT STORE OR USE GASOLINE OR OTHER FLAMMABLE VAPORS AND LIQUID IN THE VICINITY OF THIS OR ANY OTHER APPLIANCE.

– WHAT TO DO IF YOU SMELL GAS:
  • DO NOT TRY TO LIGHT ANY APPLIANCE.
  • DO NOT TOUCH ANY ELECTRICAL SWITCH; DO NOT USE ANY PHONE IN YOUR BUILDING.
  • IMMEDIATELY CALL YOUR GAS SUPPLIER FROM A NEIGHBOR'S PHONE. FOLLOW THE GAS SUPPLIER'S INSTRUCTIONS. IF YOU CAN NOT REACH YOUR GAS SUPPLIER, CALL THE FIRE DEPARTMENT.

– INSTALLATION AND SERVICE MUST BE PERFORMED BY A QUALIFIED INSTALLER, SERVICE AGENCY OR THE GAS SUPPLIER.

WARNING

TO PREVENT POSSIBLE PROPERTY DAMAGE, PERSONAL INJURY OR DEATH DUE TO ELECTRICAL SHOCK, THE FURNACE MUST BE LOCATED TO PROTECT THE ELECTRICAL COMPONENTS FROM WATER.

Drain trap must be primed at time of installation. Trap is internally partitioned; add water to both inlet ports until water appears at both sides of the outlet opening. Failure to prime trap at time of installation may have a negative effect on combustion quality and pressure switch action.

WARNING

FIRE OR EXPLOSION HAZARD

FAILURE TO FOLLOW THE SAFETY WARNINGS EXACTLY COULD RESULT IN SERIOUS INJURY, DEATH OR PROPERTY DAMAGE.

NEVER TEST FOR GAS LEAKS WITH AN OPEN FLAME. USE A COMMERCIALLY AVAILABLE SOAP SOLUTION MADE SPECIFICALLY FOR THE DETECTION OF LEAKS TO CHECK ALL CONNECTIONS. A FIRE OR EXPLOSION MAY RESULT CAUSING PROPERTY DAMAGE, PERSONAL INJURY OR LOSS OF LIFE.

AVERTISSEMENT

RISQUE D'INCENDIE OU D'EXPLOSION

SI LES CONSIGNES DE SÉCURITÉ NE SONT PAS SUIVIES À LA LETTRE, CELA PEUT ENTRAÎNER LA MORT, DE GRAVES BLESSURES OU DES DOMMAGES MATÉRIELS.

NE JAMAIS VÉRIFIER LA PRÉSENCE DE FUITES DE GAZ AU MOYEN D'UNE FLAMME NUE. VÉRIFIER TOUS LES RACCORDS EN UTILISANT UNE SOLUTION SAVONNEUSE COMMERCIALE CONÇUE SPÉCIALEMENT POUR LA DÉTECTION DE FUITES. UN INCENDIE OU UNE EXPLOSION RISQUE DE SE PRODUIRE, CE QUI PEUT ENTRAÎNER LA MORT, DES BLESSURES OU DES DOMMAGES MATÉRIELS.

Shipping Inspection

All units are securely packed in shipping containers tested according to International Safe Transit Association specifications. The carton must be checked upon arrival for external damage. If damage is found, a request for inspection by carrier's agent must be made in writing immediately.

The furnace must be carefully inspected on arrival for damage and bolts or screws which may have come loose in transit. In the event of damage the consignee should:

1. Make a notation on delivery receipt of any visible damage to shipment or container.
2. Notify carrier promptly and request an inspection.
3. With concealed damage, carrier must be notified as soon as possible - preferably within five days.
4. File the claim with the following support documents within a nine month statute of limitations.
   - Original or certified copy of the Bill of Lading, or indemnity bond.
   - Original paid freight bill or indemnity in lieu thereof.
   - Original or certified copy of the invoice, showing trade and other discounts or reductions.
   - Copy of the inspection report issued by carrier's representative at the time damage is reported to carrier.

The carrier is responsible for making prompt inspection of damage and for a thorough investigation of each claim. The distributor or manufacturer will not accept claims from dealers for transportation damage.

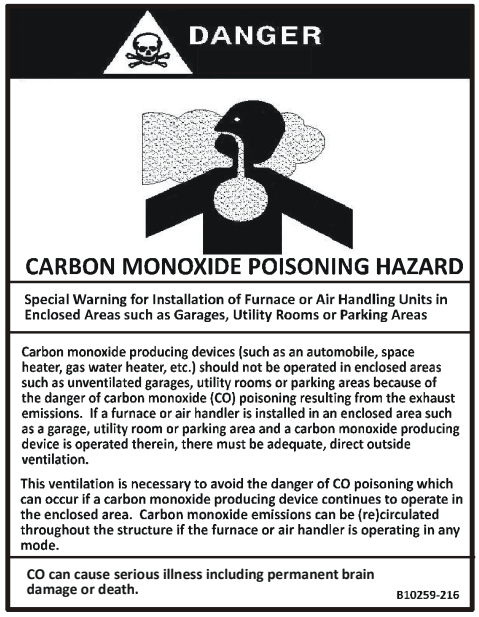

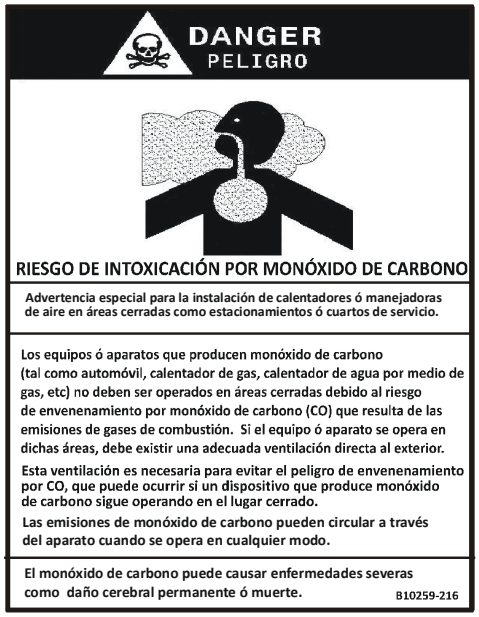



NOTE: This unit should be installed in a manner so that it is not accessible to the public.

ELECTROSTATIC DISCHARGE (ESD) PRECAUTIONS

WARNING

Should overheating occur or the gas supply fail to shut off, turn off the manual gas shutoff valve external to the furnace before turning off the electrical supply.

WARNING

Possible property damage, personal injury or death due to fire, explosion, smoke, soot, condensation, electrical shock, or carbon monoxide may result from improper installation, repair operation, or maintenance of this product.

NOTE: Discharge your body's static electricity before touching unit. An electrostatic discharge can adversely affect electrical components.

Use the following precautions during furnace installation and servicing to protect the integrated control module from damage. By putting the furnace, the control, and the person at the same electrostatic potential, these steps will help avoid exposing the integrated control module to electrostatic discharge. This procedure is applicable to both installed and non-installed (ungrounded) furnaces.

1. Disconnect all power to the furnace. Do not touch the integrated control module or any wire connected to the control prior to discharging your body's electrostatic charge to ground.
2. Firmly touch a clean, unpainted, metal surface of the furnaces near the control. Any tools held in a person's hand during grounding will be discharged.
3. Service integrated control module or connecting wiring following the discharge process in step 2. Use caution not to recharge your body with static electricity; (i.e., do not move or shuffle your feet, do not touch ungrounded objects, etc.). If you come in contact with an ungrounded object, repeat step 2 before touching control or wires.
4. Discharge your body to ground before removing a new control from its container. Follow steps 1 through 3 if installing the control on a furnace. Return any old or new controls to their containers before touching any ungrounded object.

TO THE INSTALLER

Before installing this unit, please read this manual thoroughly to familiarize yourself with specific items which must be adhered to, including but not limited to: unit maximum external static pressure, gas pressures, BTU input rating, proper electrical connections, circulating air temperature rise, minimum or maximum CFM, and motor speed connections.

PRODUCT APPLICATION

This furnace is primarily designed for residential home-heating applications. It is not designed or certified for use in mobile homes, trailers or recreational vehicles. Neither is it designed or certified for outdoor applications. The furnace must be installed indoors (i.e., attic space, crawl space, or garage area provided the garage area is enclosed with an operating door).

This furnace can be used in the following non-industrial commercial applications:

Schools, Office buildings, Churches, Retail stores, Nursing homes, Hotels/motels, Common or office areas

In such applications, the furnace must be installed with the following stipulations:

- It must be installed per the installation instructions provided and per local and national codes.
- It must be installed indoors in a building constructed on site.
- It must be part of a ducted system and not used in a free air delivery application.
- It must not be used as a “make-up” air unit.
- It must be installed as a two-pipe system for combustion air.
- All other warranty exclusions and restrictions apply This furnace is an ETL dual-certified appliance and is appropriate for use with natural or propane gas (**NOTE:** If using propane, a propane conversion kit is required).

Dual certification means that the combustion air inlet pipe is optional and the furnace can be vented as a:

Non-direct vent (single pipe) central forced air furnace in which combustion air is taken from the installation area or from air ducted from the outside or,

Direct vent (dual pipe) central forced air furnace in which all combustion air supplied directly to the furnace burners through a special air intake system outlined in these instructions.

WARNING

TO PREVENT PROPERTY DAMAGE, PERSONAL INJURY, OR DEATH DUE TO FIRE, DO NOT INSTALL THIS FURNACE IN A MOBILE HOME, TRAILER, OR RECREATIONAL VEHICLE.

This furnace may be used as a construction site heater ONLY if all of the following conditions are met:

- The vent system is permanently installed per these installation instructions.
- A room thermostat is used to control the furnace. Fixed jumpers that provide continuous heating CANNOT be used and can cause long term equipment damage. Bimetal thermostats, or any thermostat affected by vibration, must not be used during construction.
- Return air ducts are provided and sealed to the furnace.
- A return air temperature range between 60ºF (16ºC) and 80ºF (27ºC) is maintained.
- MERV 11 air filter(s) are installed in the system and inspected daily and replaced as needed during construction and upon completion of construction.
- The input rate and temperature rise are set per the furnace rating plate.
- The furnace must be installed as a two-pipe system, using 100% outside air for combustion during construction.
- The furnace heat exchanger, components, duct system, air filters and evaporator coils are thoroughly cleaned following final construction clean up by a qualified person.
- All furnace operating conditions (including ignition, input rate, temperature rise and venting) are verified according to these installation instructions.
- Furnace doors must be in place on the furnace while the furnace is operating in any mode.
- Damage or repairs due to failure to comply with these requirements are not covered under the warranty.

NOTE: THE COMMONWEALTH OF MASSACHUSETTS REQUIRES THAT THE FOLLOWING ADDITIONAL REQUIREMENTS MUST ALSO BE MET:

- Gas furnaces must be installed by a licensed plumber or gas fitter.
- A T-handle gas cock must be used.
- If the unit is to be installed in an attic, the passageway to and the service area around the unit must have flooring.

To ensure proper furnace operation, install, operate and maintain the furnace in accordance with these installation and operation instructions, all local building codes and ordinances. In their absence, follow the latest edition of the National Fuel Gas Code (NFPA 54/ANSI Z223.1), and/or CAN/CSA B149.1-15 Installation Codes, local plumbing or wastewater codes, and other applicable codes.

A copy of the National Fuel Gas Code (NFPA 54/ANSI Z223.1) can be obtained from any of the following:

American National Standards Institute
23 West 43rd Street, 4th Floor
New York, NY 10036

National Fire Protection Association
1 Batterymarch Park
Quincy, MA 02169-7471

CSA International
8501 East Pleasant Valley
Independence, OH 441311

The rated heating capacity of the furnace should be greater than or equal to the total heat loss of the area to be heated. The total heat loss should be calculated by an approved method or in accordance with “ASHRAE Guide” or “Manual J-Load Calculations” published by the Air Conditioning Contractors of America.

A copy of the CAN/CSA B149.1-15 Installation Codes can also be obtained from:
CSA International
178 Rexdale Boulevard
Etobicoke, Ontario, Canada M9W 1R3

LOCATION REQUIREMENTS & CONSIDERATIONS

Follow the instructions listed below and the guidelines provided in the *Combustion and Ventilation Air Requirements* section when selecting a furnace location.

WARNING

To prevent possible equipment damage, property damage, personal injury, or death, the following bullet points must be observed when installing this unit.

WARNING

Possible property damage, personal injury or death due to fire, explosion, smoke, soot, condensation, electrical shock, or carbon monoxide may result from improper installation, repair operation, or maintenance of this product.

- Centrally locate the furnace with respect to the proposed or existing air distribution system.
- Ensure the temperature of the return air entering the furnace is between 55°F and 100°F when the furnace is heating.
- Provide provisions for venting combustion products outdoors through a proper venting system. Special consideration should be given to vent/flue pipe routing and combustion air intake pipe when applicable. Refer to *Vent/Flue Pipe and Combustion Air Pipe -Termination Locations* for appropriate termination locations and to determine if the piping system from furnace to termination can be accomplished within the guidelines given. **NOTE:** The length of flue and/or combustion air piping can be a limiting factor in the location of the furnace.
- Locate the furnace so condensate flows downwards to the drain. Do not locate the furnace or its condensate drainage system in any area subject to below freezing temperatures without proper freeze protection.
- Ensure adequate combustion air is available for the furnace. Improper or insufficient combustion air can expose building occupants to gas combustion products that could include carbon monoxide. Refer to *Combustion and Ventilation Air Requirements.*
- Set the furnace on a level floor to enable proper condensate drainage. If the floor becomes wet or damp at times, place the furnace above the floor on a concrete base sized approximately 1-½” larger than the base of the furnace. Refer to the *Horizontal Applications and Considerations* for leveling of horizontal furnaces.
- Ensure upflow or horizontal furnaces are not installed directly on carpeting, or any other combustible material. The only combustible material allowed is wood.
- A special accessory sub-base must be used for upright counterflow unit installations over any combustible material (including wood). Refer to sub-base instructions for installation details. (**NOTE**: A sub-base will not be required if an air conditioning coil is located beneath the furnace between the supply air opening and the combustible floor.
- Exposure to contaminated combustion air will result in safety and performance-related problems. Do not install the furnace where the combustion air is exposed to the following substances:
  permanent wave solutions
  chlorinated waxes or cleaners
  chlorine-based
  carbon tetrachloride
  water softening chemicals
  swimming pool chemicals
  deicing salts or chemicals
  halogen type refrigerants
  printing inks
  cleaning solutions (such as perchloroethylene)
  paint removers
  varnishes
  hydrochloric acid
  cements and glues
  antistatic fabric softeners for clothes dryers
  masonry acid washing materials
- Enclose a *non-direct vent* furnace if it is installed near an area frequently contaminated by any of the above substances. This protects the *non-direct vent* furnace from airborne contaminants. To ensure that the enclosed *non-direct vent* furnace has an adequate supply of combustion air, provide air from a nearby uncontaminated room or from outdoors. Refer to the *Combustion and Ventilation Air Requirements* for details.

- If the furnace is used in connection with a cooling coil unit, install the furnace upstream or in parallel with the cooling coil unit. Premature heat exchanger failure will result if the cooling unit is placed ahead of the furnace.
- For vertical (upflow or downflow) applications, the minimum cooling coil width shall not be less than furnace width minus 1". Additionally, a coil installed above an upflow furnace or under a counterflow furnace may be the same width as the furnace or may be one size larger than the furnace. *Example: a "C" width coil may be installed with a "B" width furnace.*
- For upflow applications, the front of the coil and furnace must face the same direction.
- If the furnace is installed in a residential garage, position the furnace so that the burners and ignition source are located not less than 18 inches (457 mm) above the floor. Protect the furnace from physical damage by vehicles.
- If the furnace is installed horizontally, ensure the access doors are not on the "up/top" or "down/bottom" side of the furnace.
- Do not connect this furnace to a chimney flue that serves a separate appliance designed to burn solid fuel.
- On Counterflow Installations, the air conditioning coil must be downstream on the supply (positive) side of the furnace heat exchanger.
- *Counterflow Installation over a noncombustible floor.* Before setting the furnace over the plenum opening, ensure the surface around the opening is smooth and level. A tight seal should be made between the furnace base and floor by using a silicone rubber caulking compound or cement grout.
- *Counterflow Installation over a combustible floor.* If installation over a combustible floor becomes necessary, use an accessory sub-base (see Specification Sheet applicable for your model for details.) A special accessory sub-base must be used for upright counterflow unit installations over any combustible material including wood. Refer to sub-base instructions for installation details. Follow the instructions with the sub-base for proper installation. Do not install the furnace directly on carpeting, tile, or other combustible material other than wood flooring. (**NOTE**: The sub-base will not be required if an air conditioning coil is installed between the supply air opening on the furnace and the floor.)

***R9S96 & *R9S92 MINIMUM CLEARANCES TO COMBUSTIBLE MATERIALS (INCHES)**

POSITION*	SIDES	REAR	FRONT	BOTTOM	FLUE	TOP
Upflow	0"	0"	3"	C	0"	1"
Horizontal	6"	0"	3"	C	0"	6"

C= If placed on combustible floor, floor MUST be wood only.

***D9S96 MINIMUM CLEARANCES TO COMBUSTIBLE MATERIALS (INCHES)**

POSITION*	SIDES	REAR	FRONT	BOTTOM	FLUE	TOP
Upflow	0"	0"	3"	NC	0"	1"
Horizontal	6"	0"	3"	C	0"	6"

C= If placed on combustible floor, floor MUST be wood only.
NC= For installation on non-combustible floor only. A combustible subbase must be used for installations on combustible flooring.

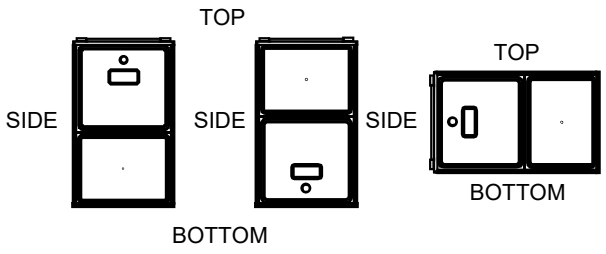

Figure 1

CLEARANCES AND ACCESSIBILITY

NOTES:

- For servicing or cleaning, a 24" front clearance is required.
- Unit connections (electrical, flue and drain) may necessitate greater clearances than the minimum clearances listed above.
- Clearance in accordance with local installation codes, the requirements of the gas supplier and the manufacturer's installation instructions.
- Dégaugement conforme aux codes d'installation locaux, aux exigences du fournisseur de gaz et aux instructions d'installation du fabricant.
- In all cases, accessibility clearance must take precedence over clearances from the enclosure where accessibility clearances are greater.

Installations must adhere to the clearances to combustible materials to which this furnace has been design certified. The minimum clearance information for this furnace is provided on the unit's clearance label. These clearances must be permanently maintained. Clearances must also accommodate an installation's gas, electrical, and drain trap and drain line connections. If the alternate combustion air intake or vent/flue connections are used additional clearance must be provided to accommodate these connections. Refer to *Vent/Flue Pipe and Combustion Air Pipe* for details.

NOTE: In addition to the required clearances to combustible materials, a minimum of 24 inches service clearance must be available in front of the unit.

A furnace installed in a confined space (i.e., a closet or utility room) must have two ventilation openings with a total minimum free area of 0.25 square inches per 1,000 BTU/hr of furnace input rating. Refer to Specification Sheet applicable to your model for minimum clearances to combustible surfaces. One of the ventilation openings must be within 12 inches of the top; the other opening must be within 12 inches of the bottom of the confined space. In a typical construction, the clearance between the door and door frame is usually adequate to satisfy this ventilation requirement.

Existing Furnace Removal

NOTE: When an existing furnace is removed from a venting system serving other appliances, the venting system may be too large to properly vent the remaining attached appliances.

The following vent testing procedure is reproduced from the American National Standard/National Standard of Canada for Gas-Fired Central Furnaces ANSI Z21.47, CSA-2.3 latest edition Section 1.23.1.

Thermostat Location

WARNING

To avoid property damage, personal injury or death, sufficient fresh air for proper combustion and ventilation of flue gas must be supplied. Most homes require outside air be supplied into the furnace area.

The thermostat should be placed approximately five feet from the floor on a vibration-free, inside wall in an area having good air circulation. Do not install the thermostat where it may be influenced by any of the following:

- Drafts, or dead spots behind doors, in corners, or under cabinets.
- Hot or cold air from registers.
- Radiant heat from the sun.
- Light fixtures or other appliances.
- Radiant heat from a fireplace.
- Concealed hot or cold water pipes, or chimneys.
- Unconditioned areas behind the thermostat, such as an outside wall. Consult the instructions packaged with the thermostat for mounting instructions and further precautions.

COMBUSTION & VENTILATION REQUIREMENTS

Improved construction and additional insulation in buildings have reduced heat loss by reducing air infiltration and escape around doors and windows. These changes have helped in reducing heating/cooling costs but have created a problem supplying combustion and ventilation air for gas fired and other fuel burning appliances. Appliances that pull air out of the house (clothes dryers, exhaust fans, fireplaces, etc.) increase the problem by starving appliances for air.

House depressurization can cause back drafting or improper combustion of gas-fired appliances, thereby exposing building occupants to gas combustion products that could include carbon monoxide.

If this furnace is to be installed in the same space with other gas appliances, such as a water heater, ensure there is an adequate supply of combustion and ventilation air for the other appliances. Refer to the latest edition of the National Fuel Gas Code NFPA 54/ANSI Z223.1 or CAN/CSA B1491-15 Installation Codes or applicable provisions of the local building codes for determining the combustion air requirements for the appliances.

Most homes will require outside air be supplied to the furnace area by means of ventilation grilles or ducts connecting directly to the outdoors or spaces open to the outdoors such as attics or crawl spaces.

INSTALLATION POSITIONS

This furnace may be installed in an upright position or horizontal on either the left or right side panel. Do not install this furnace on its back. For upright upflow furnaces, return air ductwork may be attached to the side panel(s) and/or base pan. For *upright counterflow* furnaces, return air ductwork must be attached to the top end of the blower compartment. For any horizontally installed furnaces, return ductwork must be attached to the blower compartment end of the furnace. **NOTE:** Ductwork must never be attached to the back of the furnace. Contact your distributor for proper airflow requirements and number of required ductwork connections. Refer to “Recommended Installation Positions” figure for appropriate installation positions, ductwork connections, and resulting airflow arrangements.

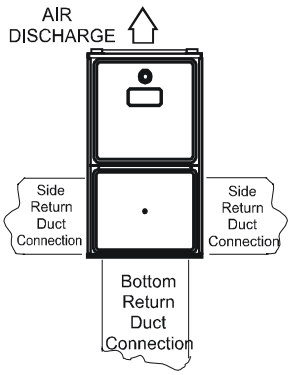

UPFLOW
UPRIGHT
Figure 2A

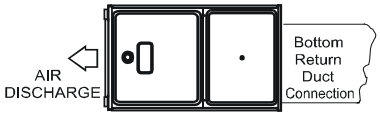

UPFLOW HORIZONTAL
LEFT AIR DISCHARGE
Figure 2B

WARNING

CARBON MONOXIDE POISONING HAZARD

Failure to follow the steps outlined below for each appliance connected to the venting system being placed into operation could result in carbon monoxide poisoning or death.

The following steps shall be followed with each appliance connected to the venting system placed in operation, while any other appliances connected to the venting system are not in operation:

1. **Seal any unused openings in the venting system.**
2. **Inspect the venting system for proper size and horizontal pitch, as required by the National Fuel Gas Code, ANSI Z223.1 or the Natural Gas and Propane Installation Code, CSA B149.1-15 and these instructions. Determine that there is no blockage or restriction, leakage, corrosion and other deficiencies which could cause an unsafe condition.**
3. **As far as practical, close all building doors and windows and all doors between the space in which the appliance(s) connected to the venting system are located and other spaces of the building.**
4. **Close fireplace dampers.**
5. **Turn on clothes dryers and any appliance not connected to the venting system. Turn on any exhaust fans, such as range hoods and bathroom exhausts, so they shall operate at maximum speed.**
   Do not operate a summer exhaust fan.
6. **Follow the lighting instructions. Place the appliance being inspected in operation. Adjust thermostat so appliance shall operate continuously.**
7. **Test for spillage from draft hood appliances at the draft hood relief opening after 5 minutes of main burner operation. Use the flame of a match or candle.**
8. **If improper venting is observed during any of the above tests, the venting system must be corrected in accordance with the National Fuel Gas Code ANSI Z223.1/NFPA 54 and/or National Gas and Propane Installation Code CSA B149.1-15.**
9. **After it has been determined that each appliance connected to the venting system properly vents when tested as outlined above, return doors, windows, exhaust fans, fireplace dampers and any other gas burning appliance to their previous conditions of use.**

AVERTISSEMENT

RISQUE D'INTOXICATION AU MONOXYDE DE CARBONE

Si les étapes décrites ci-dessous ne sont pas suivies pour chacun des appareils raccordés au système de ventilation au moment de sa mise en marche, cela peut entraîner une intoxication au monoxyde de carbone ou la mort.

Les étapes suivantes doivent être suivies pour chacun des appareils raccordés au système de ventilation au moment de sa mise en marche, alors que tous les autres appareils raccordés au système de ventilation ne sont pas en marche:

1. **Sceller toutes les ouvertures inutilisées du système de ventilation.**
2. **Inspecter le système de ventilation afin de vérifier si la taille et l'inclinaison par rapport à l'horizontale sont conformes aux exigences du National Fuel Gas Code, ANSI Z223.1/NFPA 54 ou du Code d'installation du gaz naturel et du propane, CSA B149.1 et à ces instructions. Vérifier qu'il n'y a pas d'obstruction ou de restriction, de fuite, de corrosion et d'autres problèmes qui pourraient entraîner une situation dangereuse.**
3. **Si possible, fermer toutes les portes et fenêtres du bâtiment ainsi que toutes les portes séparant l'endroit où se trouvent les appareils raccordés au système de ventilation et les autres zones du bâtiment.**
4. **Fermer le registre des foyers.**
5. **Mettre les sécheuses en marche ainsi que tous les autres appareils qui ne sont pas raccordés au système de ventilation. Mettre en marche tous les ventilateurs de tirage, comme celui des hottes de cuisine et des salles de bains, et les régler à la puissance maximale. Ne pas mettre en marche les ventilateurs d'été.**
6. **Suivre les instructions d'allumage. Mettre en marche l'appareil soumis à l'inspection. Régler le thermostat de manière à ce que l'appareil fonctionne en continu.**
7. **Vérifier la présence de fuite au niveau de l'ouverture du coupe-tirage des appareils qui en sont dotés après 5 minutes de fonctionnement du brûleur principal. Utiliser la flamme d'une allumette ou d'une bougie.**
8. **Si un problème de ventilation est observé pendant l'un des essais décrits ci-dessus, des correctifs doivent être apportés au système de ventilation conformément au National Fuel Gas Code, ANSI Z223.1/NFPA 54 et (ou) au Code d'installation du gaz naturel et du propane, CSA B149.1.**
9. **Une fois qu'il a été déterminé que chaque appareil raccordé au système de ventilation fonctionne correctement au moyen des essais décrits ci-dessus, les portes, les fenêtres, les ventilateurs, les registres de foyer et tous les autres appareils de combustion alimentés au gaz doivent être remis dans leur état initial.**

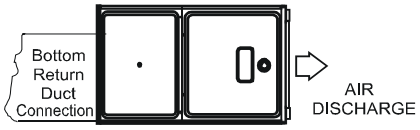

UPFLOW HORIZONTAL
RIGHT AIR DISCHARGE

FIGURE 2C



Counterflow

FIGURE 2D

HORIZONTAL APPLICATIONS & CONSIDERATIONS

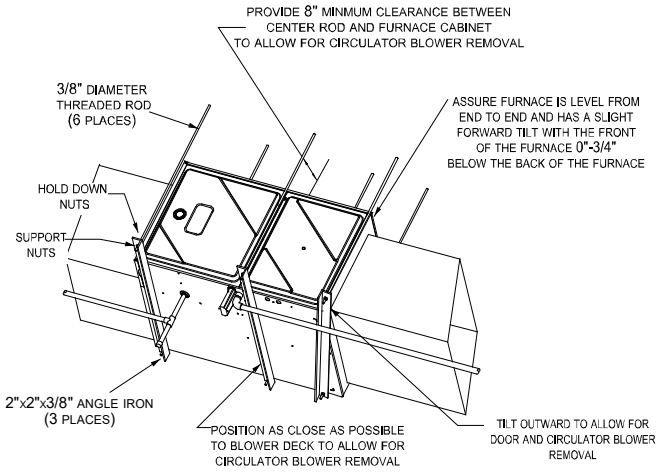

FIGURE 3

When installing a furnace horizontally, additional consideration must be given to the following:

FURNACE SUSPENSION

If suspending the furnace from rafters or joists, use ⅜" threaded rod and 2"x2"x⅛" angle iron as shown in the following diagram. The length of rod will depend on the application and the clearances necessary.

If the furnace is installed in a crawl space it must be suspended from the floor joist or supported by a concrete pad. Never install the furnace on the ground or allow it to be exposed to water.

FRONT COVER PRESSURE SWITCH TUBE LOCATION

When a furnace is installed horizontally with left side down, the front cover pressure switch tube must be re-located to the lower port of the collector box cover.

1. Remove tube from front cover pressure switch and collector box cover.
2. Remove rubber plug from bottom collector box port and install on top collector box port.
3. Locate 24" x ¼" tube in bag assembly.
4. Install one end on front cover pressure switch.
5. Route tube to lower port on collector box cover and cut off excess tubing.

DRAIN TRAP AND LINES

In horizontal applications the condensate drain trap is secured to the furnace side panel, suspending it below the furnace. A minimum clearance of 5.5" below the furnace must be provided for the drain trap. Additionally, the appropriate downward piping slope must be maintained from the drain trap to the drain location. Refer to Condensate Drain Trap and Lines for further details. If the drain trap and drain line will be exposed to temperatures near or below freezing, adequate measures must be taken to prevent condensate from freezing.

LEVELING

Leveling ensures proper condensate drainage from the heat exchanger. For proper flue pipe drainage, the furnace must be level lengthwise from end to end. The furnace should have a slight tilt from back to front with the access doors downhill from the back panel approximately ½ to ¾ inches. The slight tilt allows the heat exchanger condensate, generated in the recuperator coil, to flow forward to the recuperator coil front cover.

ALTERNATE ELECTRICAL AND GAS LINE CONNECTIONS

This furnace has provisions allowing for electrical and gas line connections through either side panel. In horizontal applications the connections can be made either through the "top" or "bottom" of the furnace.

DRAIN PAN

A drain pan must be provided if the furnace is installed above a conditioned area. The drain pan must cover the entire area under the furnace (and air conditioning coil if applicable).

FREEZE PROTECTION

If the drain line is routed through an area which may see temperatures near or below freezing, precautions must be taken to prevent condensate from freezing within the drain line.

VENT PIPE & COMBUSTION AIR PIPE

WARNING

Upon completion of the furnace installation, carefully inspect the entire flue system both inside and outside of the furnace to assure it is properly sealed. Leaks in the flue system can result in serious personal injury or death due to exposure to flue products, including carbon monoxide.

WARNING

Failure to follow these instructions can result in bodily injury or death. Carefully read and follow all instructions given in this section.

This manual will refer to the pipe that discharges products of combustion to the outdoors as the “vent” pipe or “flue” pipe. The pipe that supplies air for combustion to the furnace will be referred to as the “intake” pipe or “combustion air” pipe.

This furnace is dual certified and may be installed as a non-direct vent (single pipe) or direct vent (dual pipe) appliance.

MATERIALS – INSTALLATIONS IN THE U.S.A.

PVC, CPVC, or ABS pipe & fittings are typically used as venting and intake pipe materials. All 90° elbows must be medium or long radius types. A medium radius elbow should measure ~3-1/16” minimum from the plane of one opening to the center line of the other opening for 2” diameter pipe, and ~4-9/16” minimum for 3” pipe.

In addition to these materials, Innoflue® by Centrotherm Eco Systems is also an approved vent and combustion air materials for installations in the U.S.A. Manufacturers Installation instructions for these products must be followed. These products have specific instructions for installing, joining and terminating. Do not mix materials or components of one manufacturer with materials or components of another manufacturer. Refer to the following chart for plastic pipe & fittings specifications.

MATERIALS – INSTALLATIONS IN CANADA

All installations in Canada must conform to the requirements of CAN/CSA B149.1-15 code. All vent components, including primer and cement, must be listed to ULC S636. The certified pipe and fittings should be clearly marked with the ULC standard “S636”. The primer and cement used must be of the same manufacturer as the vent system. For Royal Pipe System 636; use GVS-65 Primer (Purple) and GVS-65 PVC Solvent Cement. For IPEX System 636, use PVC/CPVC Primer, Purple or clear. Use PVC Solvent cement (Gray). For Canadian installations, ABS may be used as a combustion air pipe only. ABS is not an approved vent material in Canada. If ABS is used as a combustion air pipe, it must be CSA certified. Always follow the manufacturer’s instructions in the use of primer and cement. Do not use primer and cement around potential sources of ignition. Do not use primer or cement beyond its expiration date.

VENTING MATERIAL REQUIREMENTS	
PVC	ASTM STANDARD
SCHEDULE 40 PIPE	D1785
SDR 21 or 26 PIPE	D2241
SYTSTEM 1738® (IPEX)	D1784, UL 1738
SCHEDULE 40 FITTINGS	D2466
SYTSTEM 1738® FITTINGS	D1784, UL 1738
ABS	
SCHEDULE 40 PIPE	D1527
FITTINGS	D2468
CPVC	
SCHEDULE 40 PIPE	F441
SDR 21 or 26 PIPE	F442
FITTINGS	F438
POLYPROPYLENE	
INNOFLUE® (CENTROTHERM)	UL 1738
PRIMER & SOLVENT CEMENT	
PVC PRIMER	F656
CPVC PRIMER	F656
PVC SOLVENT CEMENT	D2564
CPVC SOLVENT CEMENT	F493
ABS SOLVENT CEMENT	D2235
ABS/PVC/CPVC ALL PURPOSE CEMENT (FOR PIPE & FITTINGS OF THE SAME MATERIAL)	D2564, D2235, F493
TRANSITION CEMENT FOR ABS TO PVC or CPVC	D3188
INSTALLATIONS IN CANADA	
PVC & CPVC PIPE & FITTINGS	ULC S636
PVC & CPVC SOLVENT CEMENT	
TRANSITION CEMENT	
INNOFLUE® (CENTROTHERM)	
POLYPRO® (DURAVENT)	
SYSTEM 636® (IPEX)	

PIPE INSTALLATION

This furnace is manufactured with 2” CPVC vent & intake couplings. Use transition cement to connect PVC or ABS pipe to these fittings. For furnaces requiring installation of 3” pipe, the transition from 2” to 3” should be done as close to the furnace as possible, and only when the piping is sloped enough to prevent condensation from collecting.

This furnace must not be connected to Type B, BW, or L vent or vent connector, and must not be vented into masonry chimney. A masonry chimney may be used as a chase or passageway for approved venting materials providing the masonry chimney is not also being used to vent products of combustion. Never common vent this appliance with another appliance. Never use a vent which

is used by a solid fuel appliance.

Piping may run vertically or horizontally and must be adequately supported to prevent strain on joints, sagging, separation, and detachment from the furnace. Horizontal runs of piping must be supported every three to five feet. Condensation within the furnace secondary heat exchanger and in the vent pipe is a normal occurrence. Vent pipe must be installed to maintain a minimum ¼ inch per foot downward slope toward the furnace to return condensate to the furnace's drain system. Condensation may also occur in the intake pipe. This commonly takes place during the summer months when humid air enters an intake pipe that runs through a cool basement or other conditioned space.

Precautions should be taken to prevent condensate from freezing inside the flue/vent pipe, combustion air intake pipe and/or at the pipe terminations. All flue/vent and/or combustion air piping exposed to temperatures below 35°F for extended periods of time should be insulated with 1/2" thick closed cell foam. All vent/flue piping exposed to outdoors in excess of the terminations permitted as described in the provided installation manual should be insulated with 1/2" thick closed cell foam. Inspect piping for leaks prior to installing insulation. If the combustion air intake or flue vent pipe is to be installed above a finished ceiling or other area where dripping of condensate will be objectionable, insulating the combustion air pipe may be necessary. Use 1/2" thick closed cell foam insulation where required. Refer to vent & intake options for using the RF000142 kit and managing condensation.

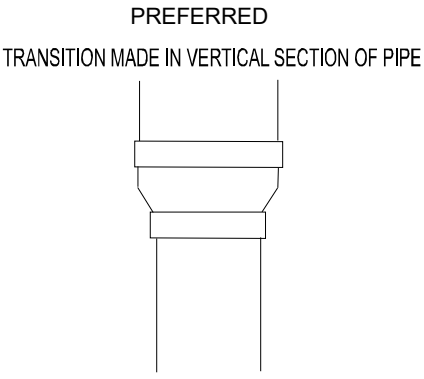

Figure 4

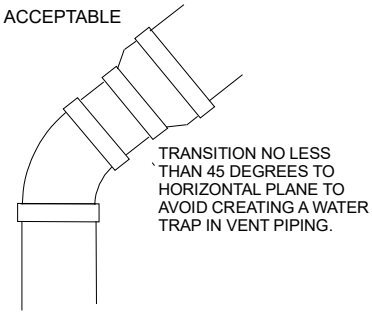

Figure 5

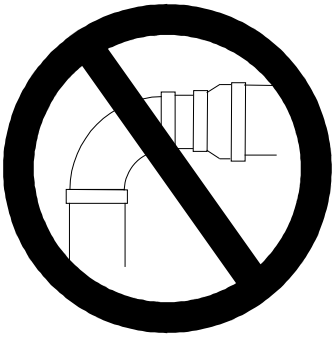

Figure 6

WARNING

To avoid bodily injury, fire or explosion, solvent cements must be kept away from all ignition sources (i.e., sparks, open flames, and excessive heat) as they are combustible liquids. Avoid breathing cement vapors or contact with skin and/or eyes.

Pipe Sizing

Consult tables 4 & 5 to determine what diameter piping is required for your installation. Lengths shown in the chart apply to single pipe & two pipe installations. In a two pipe installation the length shown refers to only one pipe, vent or intake. Both pipes would normally be equal in length, if different, then the longest pipe must be within the limits of table 4. It is preferable to up-size from 2" to 2.5" or 3" pipe if the pipe length & elbow count are near maximum. This will help avoid nuisance pressure switch opening caused by prevailing winds & sudden changes in atmospheric pressure.

		Number of Elbows							
MODEL	PIPE SIZE	1	2	3	4	5	6	7	8
*R9S960403AN	2	75	70	65	60	55	50	45	40
	3	114	107	100	93	86	79	72	65
*R9S960603BN	2	45	40	35	30	25	20	15	10
	3	168	161	154	147	140	133	126	119
*R9S960803BN	2	35	30	25	20	15	10	5	N/A
	3	168	161	154	147	140	133	126	119
*R9S960804CN	2	60	55	50	45	40	35	30	25
	3	113	106	99	92	85	78	71	64
*R9S960805CN	2	45	40	35	30	25	20	15	10
	3	120	113	106	99	92	85	78	71
*R9S961005CN	2	40	35	30	25	20	15	10	5
	3	151	144	137	130	123	116	109	102
*R9S961205DN	2	N/A	N/A	N/A	N/A	N/A	N/A	N/A	N/A
	3	158	151	144	137	130	123	116	109
*D9S960403BN	2	100	95	90	85	80	75	70	65
	3	137	130	123	116	109	102	95	88
*D9S960603BN	2	45	40	35	30	25	20	15	10
	3	168	161	154	147	140	133	126	119
*D9S960804CN	2	40	35	30	25	20	15	10	5
	3	120	113	106	99	92	85	78	71
*D9S961005CN	2	N/A	N/A	N/A	N/A	N/A	N/A	N/A	N/A
	3	113	106	99	92	85	78	71	64
*D9S961205DN	2	N/A	N/A	N/A	N/A	N/A	N/A	N/A	N/A
	3	110	103	96	89	82	75	68	61

NOTE: FOR INSTALLATIONS AT OR ABOVE 5,000 FEET ALTITUDE, USE 3" PIPE.
R9S960803BN - add 20' of 2" pipe for upflow position
1) Maximum allowable limits listed on individual lengths for inlet and flue and NOT a combination
2) Minimum requirement for each vent pipe is five (5) feet in length and one elbow/tee
3) Tee used in the vent/flue termination must be included when determining the number of elbows in the piping system.
4) 2 1/2" or 3" diameter pipe can be used in place of 2" diameter pipe

Table 4

		Number of Elbows							
MODEL	PIPE SIZE	1	2	3	4	5	6	7	8
*R9S920403AN	2	75	70	65	60	55	50	45	40
	3	114	107	100	93	86	79	72	65
*R9S920603BN	2	55	50	45	40	35	30	25	20
	3	127	120	113	106	99	92	85	78
*R9S920803BN	2	30	25	20	15	10	5	N/A	N/A
	3	72	65	58	51	44	37	30	23
*R9S920804CN	2	30	25	20	15	10	5	N/A	N/A
	3	72	65	58	51	44	37	30	23
*R9S920805CN	2	40	35	30	25	20	15	10	5
	3	72	65	58	51	44	37	30	23
*R9S921004CN	2	60	55	50	45	40	35	30	25
	3	168	161	154	147	140	133	126	119
*R9S921005CN	2	30	25	20	15	10	5	N/A	N/A
	3	113	106	99	92	85	78	71	64
*R9S921205DN	2	N/A	N/A	N/A	N/A	N/A	N/A	N/A	N/A
	3	65	58	51	44	37	30	23	16

NOTE: FOR INSTALLATION AT OR ABOVE 5,000 FEET ALTITUDE, USE 3" PIPE.
***R9S920803BN - add 10' of 2" pipe for up flow position, add 66' of 3" pipe for up flow position**
***R9S920804CN - add 25' of 2" pipe for up flow position, add 58' of 3" pipe for up flow position**
***R9S920805CN - add 15' of 2" pipe for upflow position, add 58' of 3" pipe for upflow position**
1) Maximum allowable limits listed on individual lengths for inlet and flue and NOT a combination
2) Minimum requirement for each vent pipe is five (5) feet in length and one elbow/tee
3) Tee used in the vent/flue termination must be included when determining the number of elbows in the piping system.

TABLE 5

1. Maximum allowable limits listed on individual lengths for inlet and flue and NOT a combination.
2. Minimum requirement for each vent pipe five (5) feet in length and one elbow/tee.
3. Tee used in the vent/flue termination must be included when determining the number of elbows in the piping system.
4. 2 ½" or 3" diameter pipe can be used in place of 2" diameter pipe.
5. Increased Clearance Configuration using (2) 45 deg. Long Sweep elbows should be considered equivalent to one 90 deg. elbow.
6. One 90° elbow should be secured to the combustion air intake connection.

VENT PIPE CONNECTION

The vent pipe outlet is sized to accept 2" pipe. Secure vent pipe directly into the furnace fitting with the appropriate glue. Alternately, a small section of 2" pipe may be glued in the furnace socket and a rubber coupling installed to allow removal for future service. Piping should be routed in a manner to avoid contact with refrigerant lines, metering devices, condensate drain lines, etc. If necessary, clearances may be increased by creating an offset using two 45° elbows (Figure 7).

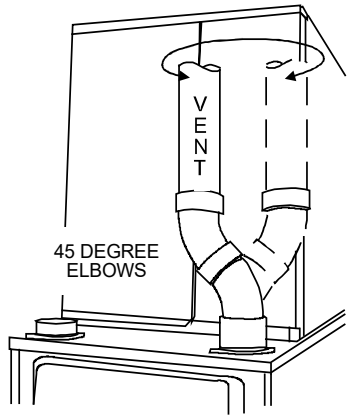

INCREASED CLEARANCE CONFIGURATION
FIGURE 7

COMBUSTION AIR PIPE CONNECTION

If the furnace is being installed without a combustion air pipe, a 90° elbow should be used on the combustion air intake to guard against blockage.

On up flow / horizontal models, secure the combustion air intake pipe to the air intake coupling using a rubber coupling supplied with the furnace. The rubber coupling may be omitted by inverting the intake coupling and gluing pipe directly to it. Piping may also be glued to the intake coupling in its original position by using a plastic coupling. On counterflow units secure the combustion air intake pipe to the air intake coupling using the rubber coupling and worm gear hose clamps provided with the unit. The counterflow rubber coupling allows service removal of air intake piping internal to the furnace blower compartment. The combustion air intake pipe can also be secured directly to the counterflow unit air intake pipe coupling.

VENT & INTAKE PIPE OPTIONS FOR CONDENSATE MANAGEMENT

The RF000142 coupling (Figure 9) can be secured directly to the furnace intake and/or vent if condensation/rain water is a concern. If the RF000142 is used on the combustion air inlet, it must be installed with the arrow pointing up. It should be noted, the combustion air will actually be moving in a direction opposite of the arrow on the RF000142 coupling. It must have a field supplied, trapped drain tube free-draining to a proper condensate disposal location. A loop in the drain tube can serve as a trap. The unused RF000142 drain fitting must be capped. A field supplied tee installed in the and/or vent pipe is also an acceptable method of catching condensation. For vertical vent piping, a PVC wye can be used for catching condensation (see Figure 8B). Any of these options must have a field supplied, trapped drain tube or pipe, free-draining to a proper condensate disposal location. A loop in the drain tube can serve as a trap.

WARNING

Edges of sheet metal holes may be sharp. Use gloves as a precaution when removing hole plugs.

Alternate Vent & Intake Pipe Connections (Upflow/Horizontal models only)

When installing a furnace horizontally with the left side down, alternate flue and combustion air pipe connections may be used. This method allows the flue and combustion air piping to be run vertically through the side of the furnace (facing up in horizontal left). The alternate vent location is the 3" hole directly in line with the induced draft blower outlet.

When using the horizontal alternate vent configuration, you must use the RF000142 vent drain kit. See Figures 8-11 & follow steps below.

NOTE: In the horizontal left installation position, a means of condensate collection must be provided to keep vent pipe condensate from entering the draft inducer housing. If the vent drain elbow is eliminated from the installation, the RF000142 kit must be used.

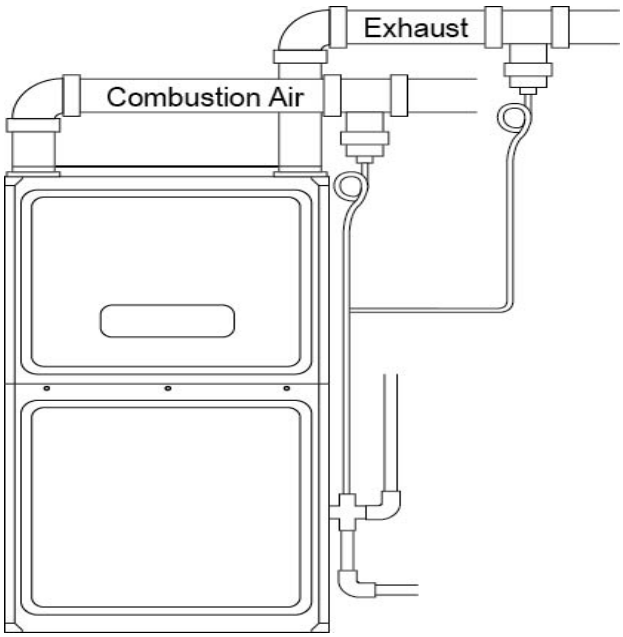

Tee Installation in Intake Pipe
Figure 8A

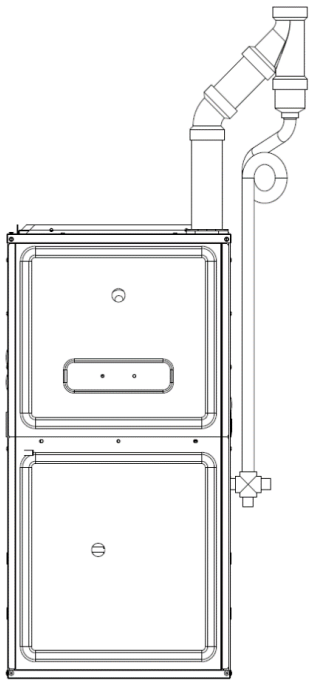

Vent Piping with PVC WYE
Figure 8B

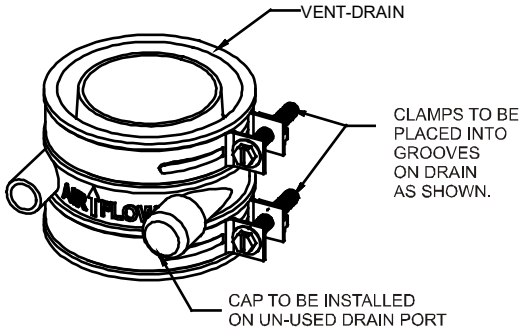

Figure 9

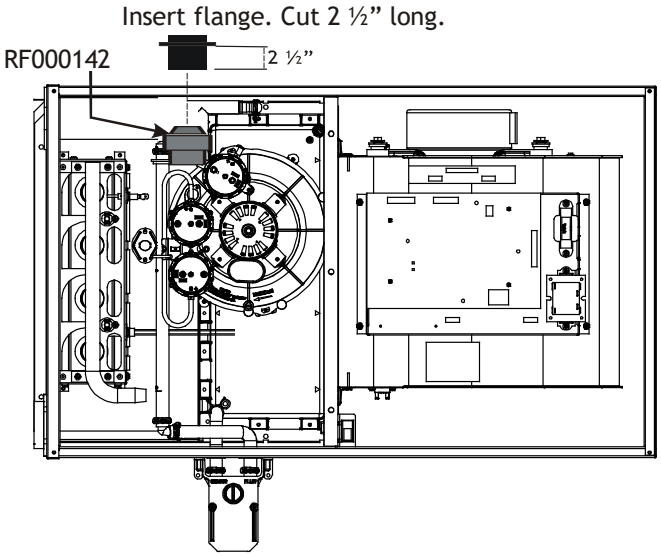

Figure 10

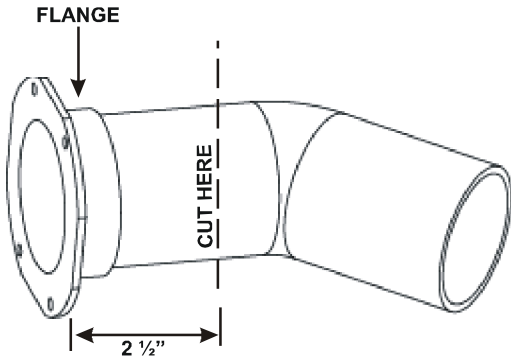

Figure 11

1. Remove the four screws from the vent pipe flange on top of the furnace.
2. Remove the internal elbow, vent pipe & gasket.
3. Cut the internal vent pipe 2 ½” from the flange. Discard the un-flanged section.
4. Remove the 3” plastic plug (in line with the inducer outlet) and insert it in the space vacated by removal of the internal vent pipe.
5. Install the RF000142 drain coupling with arrow facing up, on the draft inducer outlet.
6. Insert the 2 ½” flanged section of pipe with gasket through the 3” hole and connect to RF000142 drain coupling. Secure it with gear clamp provided.
7. Use the four self-tapping screws removed in step 1 to secure flange to cabinet.
8. Connect drain hose to the uncapped port on the RF000142 coupling, refer to page xx, section entitled “Horizontal Installation with Left Side Down – Alternate” for drain connection details

When using the alternate venting location, either in a horizontal left side down installation or a vertical installation using down – venting, the alternate combustion air opening can be used. A locating dimple is located on the right side of the furnace cabinet. The locating dimple is 1-⅞” measured from the front edge of the cabinet in line with the knock out.

To use the alternate combustion air location:

1. Remove screws and combustion air flange and gasket from cabinet.
2. Insert the 3” cabinet plug from the drain bag assembly in the unused combustion air hole.
3. Drill a pilot hole at the cabinet dimple (size dictated by knockout tool used).
4. Use a knockout tool to create a 3” diameter hole.
5. Secure the combustion air flange & gasket to the furnace cabinet using the self-tapping screws removed in step 1.

WARNING

The rubber elbow is not designed to support a load. When the rubber elbow is mounted externally to the furnace cabinet, extreme care must be taken to adequately support field-supplied vent/flue piping, as damage can result in leaks causing bodily injury or death due to exposure to flue gases, including carbon monoxide.

CAUTION

Be sure not to damage internal wiring or other components when reinstalling coupling and screws.

DOWN VENTING UPFLOW MODEL FURNACES ONLY

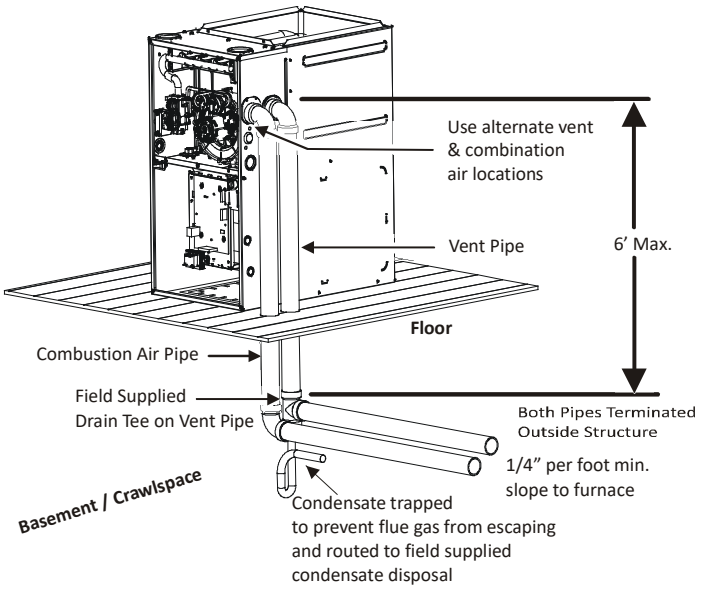

All piping and fittings must be joined per material manufacturers specifications to prevent separation and flue gas leaks.

Figure 12

Pipe Termination

Products of combustion must always be vented outside. A vent pipe must never terminate in an attic, crawl space, or any other part of a dwelling. Follow the vent pipe & intake pipe termination requirements listed below as well as all applicable local, State and National codes.

All terminations (vent and/or intake) must be located at least 12” above ground level or the anticipated snow level.

All vent terminations (non-direct and direct vent) must terminate at least 3 feet above any forced air inlet located within 10 feet.

The vent termination of a non-direct vent application must terminate at least 4 feet below, 4 feet horizontally from, or 1 foot above any door, window, or gravity air inlet into any building.

The vent termination of a direct vent application must terminate at least 12” from any opening through which flue gases may enter a building (door, window, or gravity air inlet).

The vent termination of vent pipe run vertically through a roof must terminate at least 12” above the roof line (or the anticipated snow level) and be at least 12” from any vertical wall (including any anticipated snow build up).

A vent termination shall not terminate over public walkways or over an area where condensate or vapor could create a nuisance or hazard or could be detrimental to the operation of regulators, relief valves, or other equipment.

The combustion air intake termination of a direct vent application should not terminate in an area which is frequently dusty or dirty.

Vent & combustion air pipes may terminate vertically through a roof, or horizontally through an outside wall. The combustion air intake and vent pipe terminations must be in the same atmospheric pressure zone. Vertical vent pipe terminations should be as shown in figure 14. The penetration of pipes through the roof must be sealed water tight with proper flashing such as is used with a plastic plumbing vent.

Horizontal vent pipe terminations should be as shown in the following figures. To secure the pipe passing through the wall and prohibit damage to piping connections, a coupling should be installed on either side of the wall and solvent cemented to a length of pipe connecting the two couplings. The length of pipe should be the wall thickness plus the depth of the socket fittings to be installed on the inside and outside of the wall. The wall penetration should be sealed with silicone caulking material.

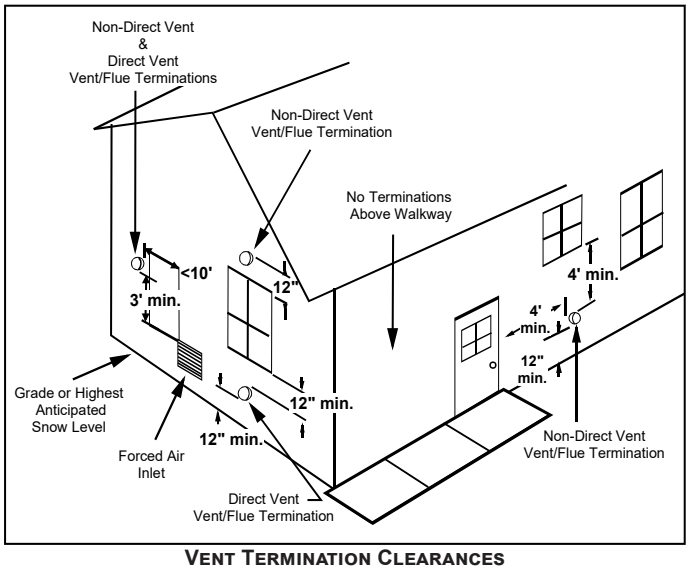

Vent Termination Clearances
Figure 13

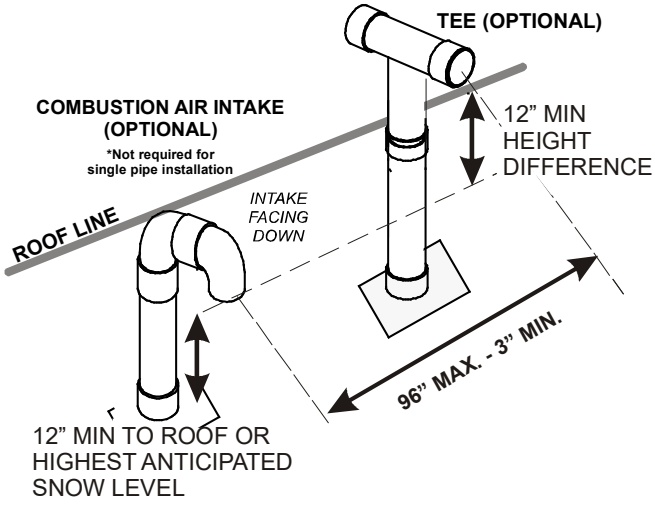

Figure 14

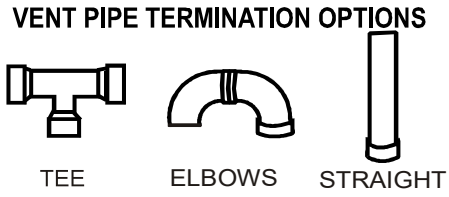

Figure 15

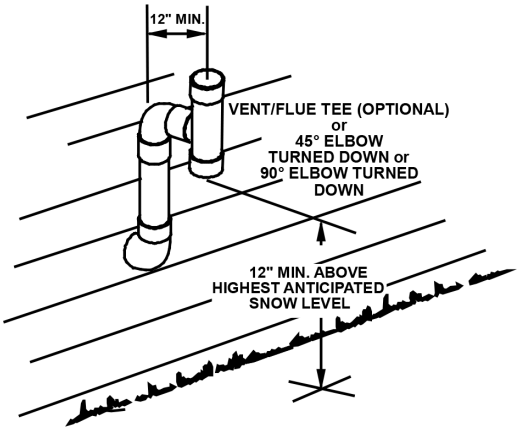

Horizontal Termination (Single Pipe) Above Highest Anticipated Snow Level
Figure 16

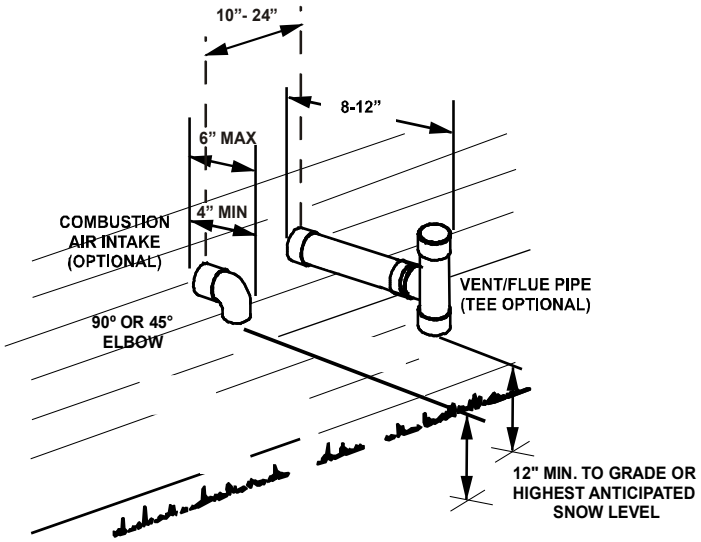

Standard Horizontal Terminations (Dual Pipe)
Figure 17

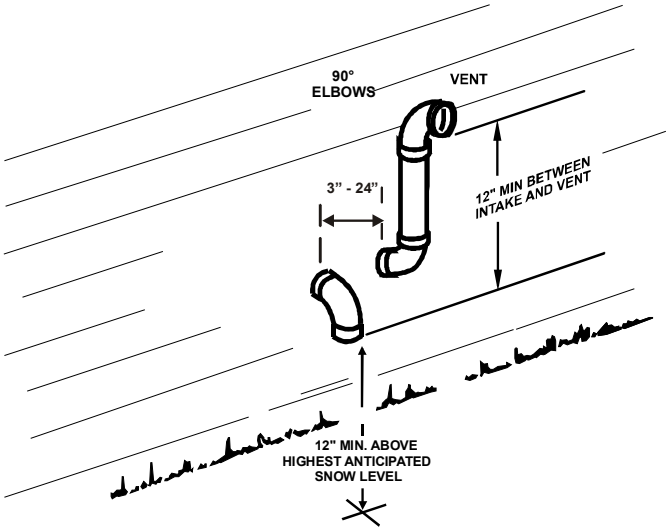

Alternate Horizontal Vent Termination (Dual Pipe)
Figure 18

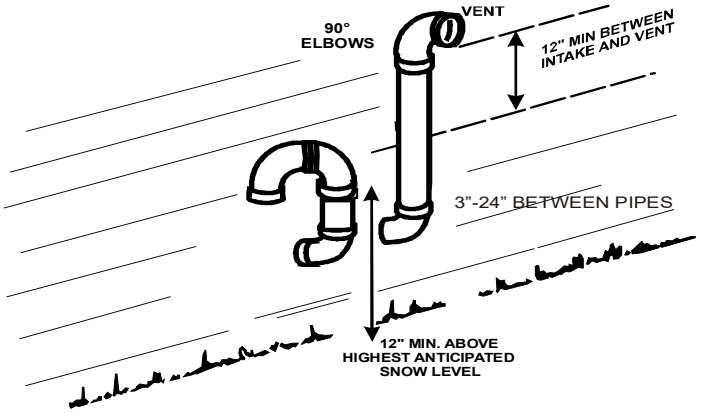

Combustion Air Intake may also be snorkeled to obtain 12" min ground clearance.
Alternate Vent Termination Above Anticipated Snow Level (Dual Pipe)
Figure 19

Vent & Combustion Air Intake Measurements for Standard Horizontal Terminations (Dual Pipe)

Center to center = 10" min / 24" max.
Vertical separation: 0" - 24"
Vent termination from wall = 8" min / 12" max.
Combustion air intake from wall = 6" max.
Vent and intake clearance to ground or anticipated snow level = 12" min.

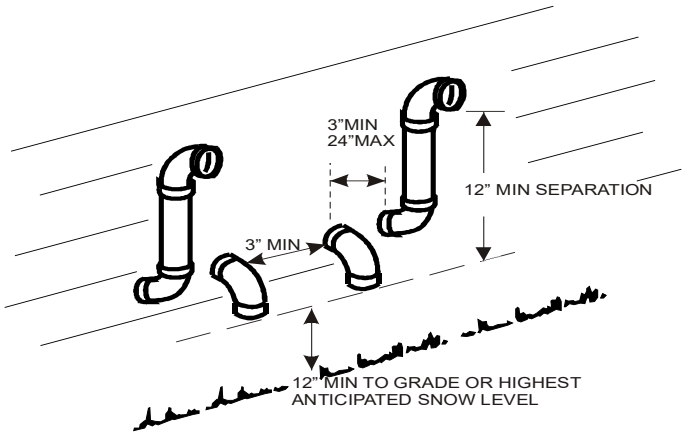

Termination of Multiple Direct Vent Furnaces
Figure 20

VENT/INTAKE TERMINATIONS FOR INSTALLATION OF MULTIPLE DIRECT VENT FURNACES

If more than one direct vent furnace is to be installed vertically through a common roof top, maintain the same minimum clearances between the exhaust vent and air intake terminations of adjacent units as with the exhaust vent and air intake terminations of a single unit.

If more than one direct vent furnace is to be installed horizontally through a common side wall, maintain the clearances as in the Figure 20. Always terminate all exhaust vent outlets at the same elevation and always terminate all air intakes at the same elevation.

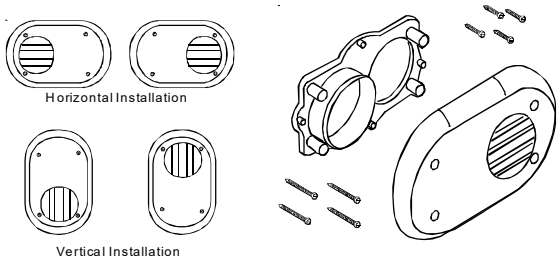

Side Wall Vent Kit
Figure 21

Concentric Vent Termination

Refer to the directions provided with the Concentric Vent Kit or IO-619 for installation specifications.

Side Wall Vent Kit

This kit is to be used with 2" or 3" direct vent systems. The vent kit must terminate outside the structure and may be installed with the intake and exhaust pipes located side-by-side or with one pipe above the other. These kits are NOT intended for use with single pipe (non-direct vent) installations. ***Refer to the directions furnished with the Side Wall Vent Kit (p/n 0170K00000S or 0170K00001S) for installation specifications.***

CONDENSATE DRAIN LINES & DRAIN TRAP

A condensing gas furnace achieves its high level of efficiency by extracting heat from the products of combustion to the point where condensation takes place. The condensate must be collected in the furnace drain trap and routed to an appropriate drain location in compliance with local and national codes.

Follow the bullets listed below when installing the drain system. Refer to the following sections for specific details concerning furnace drain trap installation and drain hose hook ups.

- The drain trap supplied with the furnace must be used.
- The drain trap must be primed at time of installation.

- The drain line between furnace and drain location must meet local and nation codes.
- The drain line between furnace and drain location must maintain a 1/4 inch per foot downward slope toward the drain.
- Do not trap the drain line in any other location than at the drain trap supplied with the furnace.
- If the drain line is routed through an area which may see temperatures near or below freezing, precautions must be taken to prevent condensate from freezing within the drain line.
- If an air conditioning coil is installed with the furnace, a common drain may be used. An open tee must be installed in the drain line, near the cooling coil, to relieve positive air pressure from the coil's plenum. This is necessary to prohibit any interference with the function of the furnace's drain trap.

NOTE: In vertical installations, air conditioning coil condensate may drain into the furnace trap as long as there is a trap between the coil and the furnace trap and the drain pipe is not terminating below the water level of the furnace trap.

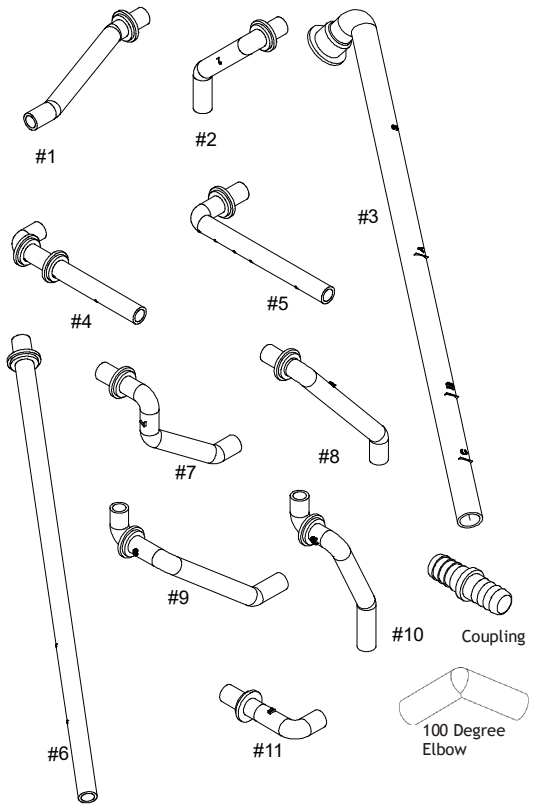

Figure 22

NOTE: Drain components shown for information purposes only. For horizontal installation, a Horizontal Drain Kit may be needed. Refer to the specifications sheet for kit part number.

General Drain Information

All furnace models come with a factory installed drain trap. For vertical installations, the trap will remain in the factory position except for a counterflow when the installer desires the drain to exit the right side. All furnace models installed horizontally require the trap to be relocated. Many drain hoses have a built–in grommet which will provide a cabinet seal when installed. See instructions below for your model and installation position.

NOTE: Both sides of the drain trap must be primed prior to initial furnace start up.

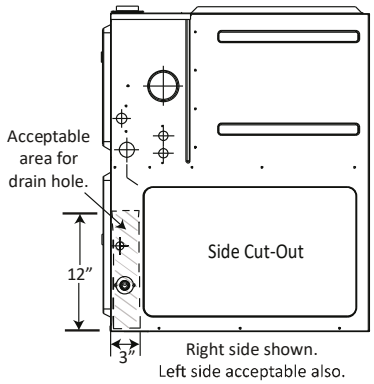

Figure 23

Field Supplied Drain

Drain the furnace and air conditioning coil if applicable, in compliance with code requirements. In horizontal or counterflow installations, a field installed rubber coupling will allow the drain trap to be removed for cleaning. The drain trap must be primed before initial furnace start up. When an air conditioning coil drain is connected to the field supplied furnace drain, it must be vented. An open tee must be installed at a height no higher than the bottom of the furnace collector box to prevent air conditioning condensate from backing up into the furnace, if the common drain was blocked.

Upflow Model Installed Vertically

The trap and factory installed hoses remain as shipped. The furnace drain may exit either the right or left side of the furnace cabinet. Both sides of the cabinet have two .875" diameter holes which can be used interchangeably for drain and low voltage wiring purposes. If a higher drain exit is needed, a .875" diameter hole may be added in the area shown in Figure 24. Any unused cabinet opening must be sealed. Do not allow drain hose to sag or trap water.

Drain Exiting Right Side

1. Locate and Install the 45º pipe / hose drain coupling from the outside of the cabinet (barbed end goes in the cabinet) through hole in the right side of the cabinet and secure with two field supplied #8 self-tapping screws (see Figure 24).
2. Locate the long drain hose #3 and cut at line "A" .
3. Install large end of hose #3 to trap outlet and secure with 1.25" clamp.

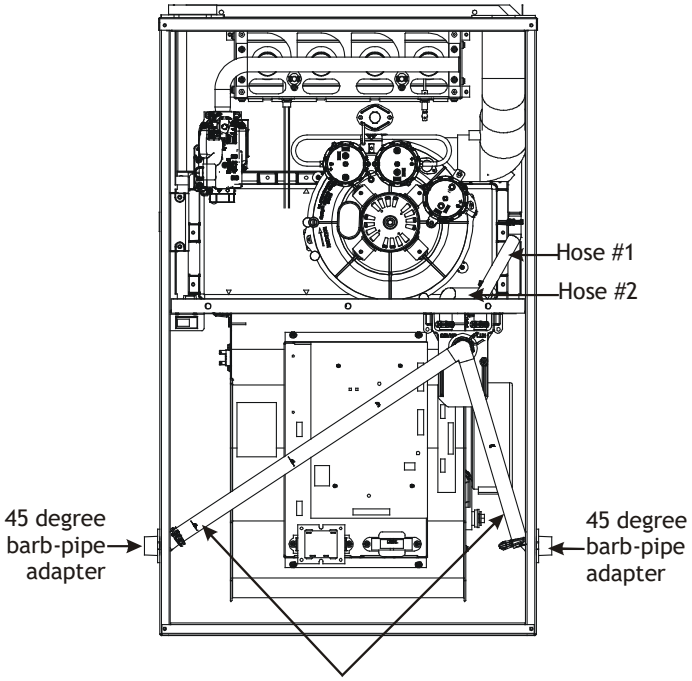

Figure 24

4. Install smaller end of hose #3 on 45º elbow and secure with 1” clamp.
5. Refer to Field Supplied Drain section for instructions on field supplied / installed drain on outlet of furnace trap.

Drain Exiting Left Side

1. Install the 45 degree pipe / hose drain coupling from the outside of the cabinet (barbed end goes in the cabinet) through the hole in the left side of the cabinet and secure with two field supplied #8 self-tapping screws (see Figure 24).
2. Locate the long drain hose #3 and cut at “B” line for a 17.5” cabinet; cut at line “C” for a 21” cabinet; do not cut for a “D” width cabinet.
3. Install large end of hose #3 to trap outlet and secure with 1.25” clamp.
4. Install smaller end of hose #3 on 45º elbow and secure with 1” clamp.
5. Refer to Field Supplied Drain section for instructions on field supplied / installed drain on outlet of furnace trap.

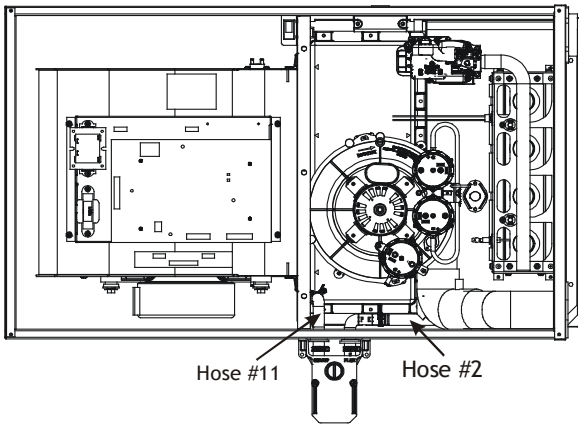

Figure 25

Upflow Model Installed Horizontally with Right Side Down

Minimum 5 ½” clearance is required for the drain trap beneath the furnace.

1. Remove the clamps from both ends of the drain hoses.
2. Remove the two screws holding the drain trap to the blower deck.
3. Remove the trap and two hoses from the blower deck
4. Remove the two plugs from the right side of the cabinet and install them in the blower deck.
5. (Draining the Vent Elbow) Locate hose #2 (factory installed) and cut 1” away from the 45 degree bend, discard the 45 degree section. Insert hose #2 from outside the cabinet through the cabinet drain hole nearest the top, secure it to the barbed fitting in the elbow with a red clamp.
6. (Draining the Collector Box) Install the non-grommet end of hose #11 from outside the cabinet in the bottom drain hole. Install on collector box and secure with a silver clamp.
7. Use two silver clamps and secure the hoses to drain trap. The trap outlet faces the front of the furnace. Secure the trap to the cabinet using two screws removed in step 2 by inserting the two screws through the large set of holes in the top mounting tabs of the trap into the two pre-drilled holes in the side of the cabinet.
8. Refer to Field Supplied Drain section for instructions on field supplied / installed drain on outlet of furnace trap.

Upflow Model Installed Horizontally with Left Side Down

Minimum 5 ½” clearance is required for the drain trap beneath the furnace.

**Also see Front Cover Pressure Switch Tube Location on page 10.*

1. Remove the clamps from the two drain tubes on the trap.
2. Remove the two screws holding the drain trap to the blower deck.
3. Remove the trap and hoses from the blower deck.

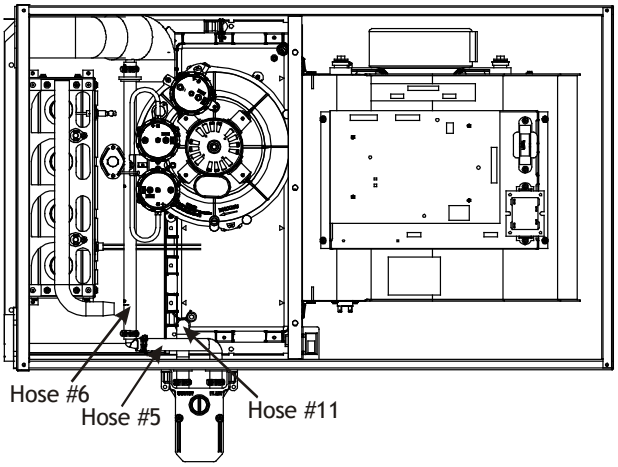

Figure 26

4. Remove the two plugs from the left side of the cabinet and install them in the blower deck.
5. (Draining the Vent Elbow) Locate hose #6. Measuring from the non-grommet end; cut off and discard 1 ½" for a "D" width cabinet, 5" for a "C" width cabinet, 8 ½" for a "B" width cabinet.
6. Remove the rubber plug from vent – drain elbow side port. Place hose #6 on the vent – drain elbow side port and secure with a silver clamp .
7. ***Unused vent-drain elbow drip leg port must be sealed to prevent flue gases from escaping. Insert the rubber plug removed in step 6 into the unused elbow drain port. Inserting a blunt tool such as a 3/16" Allen wrench into the center of the rubber plug will stretch the plug and allow complete insertion.***
8. Locate hose #5 and cut 3" from the non-grommet end. Discard the section without the grommet.
9. Insert the cut end of tube #5 through the lower cabinet drain hole.
10. Connect hose #6 & hose #5 using 100º elbow and secure with two red clamps
11. (Draining the Collector Box) Remove cap from left side collector box drain port (bottom in horizontal left position) and install it on right side (top) collector box drain port.
12. Install the non-grommet end of hose #11 from outside the cabinet in the upper drain hole. Install on collector box and secure with a silver clamp.
13. Use two silver clamps and secure the hoses to drain trap. The trap outlet faces the front of the furnace. Secure the trap to the cabinet using two screws removed in step 2 by inserting the two screws through the large set of holes in the top mounting tabs of the trap into the two pre-drilled holes in the side of the cabinet. [Removed: Place cap on vent...]
14. Refer to Field Supplied Drain section for instructions on field supplied / installed drain on outlet of furnace trap.

Upflow Model Installed Horizontally With Left Side Down - Alternate

**Also see Front Cover Pressure Switch Tube Location on Page 10.*

1. (Draining the RF000142 Coupling) Locate hose #2 (factory installed). Cut off and discard the 45° radius end.
2. Install 90°radius end of hose #2 on RF000142 drain outlet and secure with a red clamp.
3. Insert coupling in hose #2 and secure with a red clamp.
4. Locate hose #5 and cut 3" from the non-grommet end. Discard the section without the grommet.
5. Insert the cut end of tube #5 through the lower cabinet drain hole.
6. Insert 100 degree elbow in the cut end of hose #5.
7. Locate hose #6. Using red clamps, connect between the coupling and 100 degree elbow, cutting off excess tubing.
8. (Draining the Collector Box) Remove cap from left side collector box drain port (bottom in horizontal left position) and install it on right side (top) collector box drain port and secure with a red clamp.
9. Install the non-grommet end of hose #11 from outside the cabinet in the upper drain hole. Install on collector box and secure with a silver clamp.
10. Use two silver clamps and secure the hoses to drain trap. The trap outlet faces the front of the furnace. Secure the trap to the cabinet using two screws removed in step 2 by inserting the two screws through the large set of holes in the top mounting tabs of the trap.

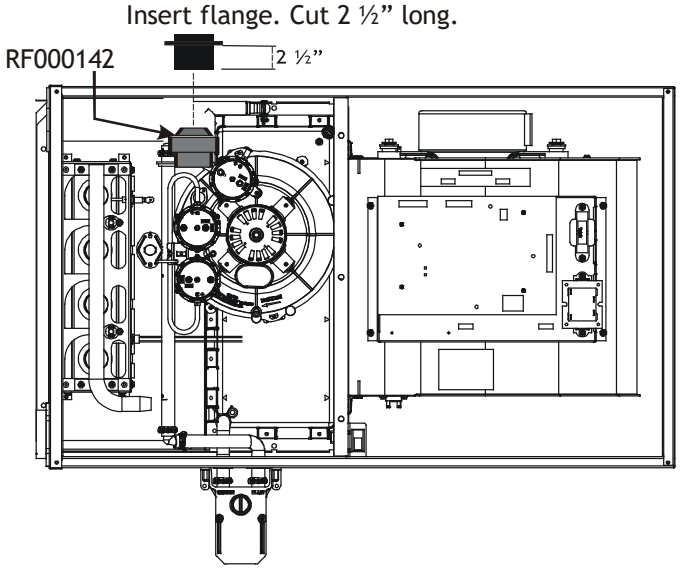

Figure 27

CounterFlow Model Installed Vertically

The furnace drain may exit the right or left side of the furnace cabinet (left side preferred) Trap and factory installed hoses remain as shipped if the drain will exit the left side of the cabinet. Draining from the right side requires relocation of the trap to outside the cabinet.

Drain Exiting Left Side (See Figure 28)

1. Install a field supplied rubber coupling secured with a 1 ¼" clamp to enable removing the trap for future cleaning. Alternately, a PVC fitting may be glued on the trap outlet.
2. Install drain per local and National codes.

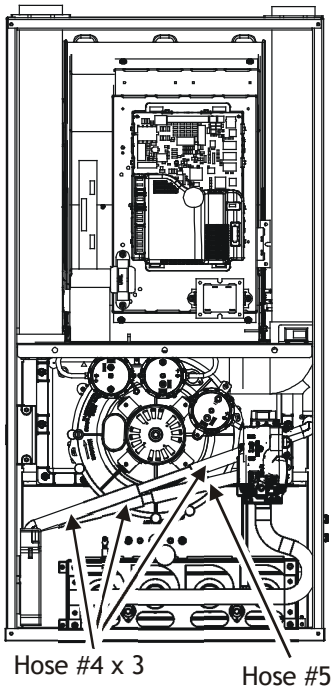

Figure 28

Drain Exiting Right Side (See Figure 29)

1. Removing the gas manifold assembly will provide better access when re-locating the trap. To remove the gas manifold, remove the four screws that fasten the gas manifold assembly to the bracket.
2. Remove hose clamps and hoses from trap.
3. Remove trap.
4. (Draining the Vent Elbow) Insert the non-grommet end hose #10 into the cabinet back drain hole. Insert a coupling into the drip leg of the vent-drain elbow and secure with a silver clamp. Secure hose #10 on vent - drain elbow barb fitting with a silver clamp.
5. (Draining the Collector Box) Insert non-grommet end of hose #9 into the cabinet front drain hole and secure on collector box drain port with a silver clamp.
6. Mate the drain trap inlets to the hoses and secure with silver clamps.
7. Line up the trap mounting holes with the pre-drilled holes in the furnace and secure with 2 screws removed in step 2.
8. Refer to Field Supplied Drain section for instructions on field supplied / installed drain on outlet of furnace trap.

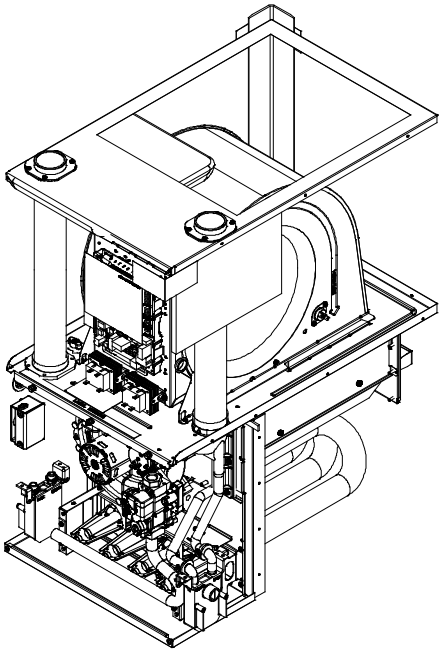

Figure 29

WARNING

HIGH VOLTAGE
To avoid personal injury or death due to electrical shock, disconnect electrical power before servicing or changing any electrical wiring.



CAUTION

Label all wires prior to disconnection when servicing controls. Wiring errors can cause improper and dangerous operation. Verify proper operation after servicing.

Counterflow Model Installed Horizontally with Right Side Down (See Figure 30)

Minimum 5 ½" clearance is required for the drain trap beneath the furnace.

NOTE: For horizontal installations, some of the required hoses are found in the factory-installed hose assemblies. Remove the hose clamps to obtain the respective hoses needed for installation, and install per the following directions.

1. Remove the drain trap and factory installed drain tube assemblies.
2. Remove two 1'' plugs from right side of cabinet.
3. (Draining the Collector Box) From outside the cabinet, insert the non-grommet end hose #7 into the back drain hole and secure to collector box drain port using a silver clamp.
4. (Draining the Vent Elbow) Insert the straight barbed coupling into the vent - drain elbow drip leg and secure with a red clamp.

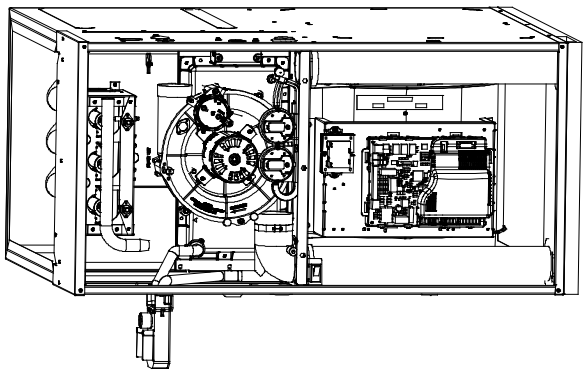

Figure 30

5. From outside the cabinet, insert the non-grommet end of hose #8 into the front cabinet drain hole and secure on the vent - drain elbow barb fitting using a red clamp.
6. Place the drain hoses on the trap inlets and secure with silver clamps. The outlet of the trap must face the original bottom of furnace.
7. Using the two sheet metal screws provided in the cabinet, secure the trap to the furnace.
8. Refer to Field Supplied Drain section for instructions on field supplied/installed drain on outlet of furnace trap.

Counterflow Model Installed Horizontally with Left Side Down (See Figure 31)

Minimum 5 ½" clearance is required for the drain trap beneath the furnace.

**Also see Front Cover Pressure Switch Tube Location on page 10.*

1. Remove the factory installed drain trap and hose assemblies. Leave the 100° elbow inserted and clamped in the vent-drain elbow.
2. Remove two 1"plugs from left side of cabinet.
3. (Draining the Collector Box) Remove the cap from the left side of the collector box drain port (bottom in horizontal left position) and install it on right side drain port.
4. Place radius end of hose #4 (factory installed) on the collector box drain port and secure with a silver clamp.
5. Insert hose #2 from outside the cabinet in the front drain hole.
6. Connect hose #4 & hose #2 together using a straight barbed coupling and two gold clamps (factory installed).
7. (Draining the Vent Elbow) Remove rubber plug from vent – drain elbow side port.
8. The unused vent-drain elbow drip leg port must be plugged to prevent flue gases from escaping. Insert rubber plug removed in step 7 into the 100° elbow. (Inserting a blunt tool such as a 3/16'' Allen wrench into the center of the rubber plug will stretch the plug and allow complete insertion)

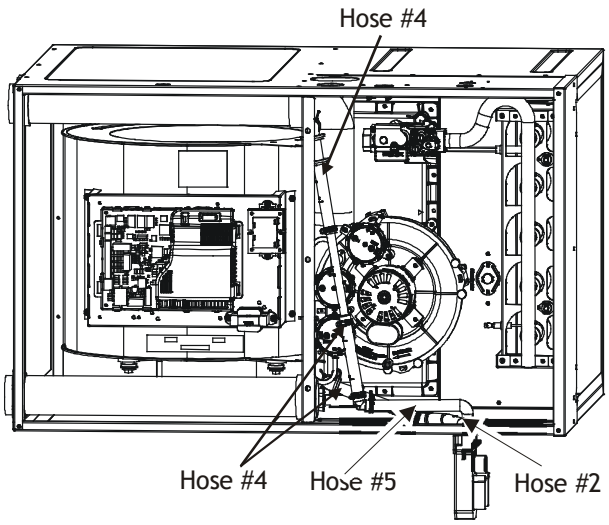

Figure 31

9. Place radius end of hose #4 on the side port of vent – drain elbow and secure with a gold clamp.
10. Insert a ½" diameter PVC pipe (factory installed) into hose #4 and secure with a gold clamp.
11. Insert the non-grommet end of hose #5 (factory installed) from outside the cabinet in the back drain hole.
12. Insert 100º elbow in hose #5 and secure with a red clamp.
13. Locate hose #4 and cut a cut off a 4" straight section and discard the radius end.
14. Connect the 4" straight section of hose #4 to the 100º elbow and the PVC pipe and secure with red clamps.
15. Connect the hoses to the trap inlets and secure with silver clamps, drain trap outlet must point to the original bottom of the furnace.
16. Using the two sheet metal screws provided in the cabinet, secure the trap to the furnace.
17. Refer to Field Supplied Drain section for instructions on field supplied / installed drain on outlet of furnace trap.

ELECTRICAL CONNECTIONS

Wiring Harness

The wiring harness is an integral part of this furnace. Wires are color coded for identification purposes. Refer to the wiring diagram for wire routings. If any of the original wire as supplied with the furnace must be replaced, it must be replaced with wiring material having a temperature rating of at least 105° C. Any replacement wiring must be a copper conductor.

115 Volt Line Connections

Before proceeding with electrical connections, ensure that the supply voltage, frequency, and phase correspond to that specified on the unit rating plate. Power supply to the furnace must be NEC Class 1, and must comply with all applicable codes. The furnace must be electrically

grounded in accordance with local codes or, in their absence, with the latest edition of The National Electric Code, ANSI NFPA 70 and/or The Canadian Electric Code CSA C22.1.

WARNING

HIGH VOLTAGE
To avoid personal injury or death due to electrical shock, disconnect electrical power before servicing or changing any electrical wiring.



Humidifier	1.0 Amp maximum at 120 VAC
Electronic Air Cleaner	1.0 Amp maximum at 120 VAC

Use a separate fused branch electrical circuit containing properly sized wire, and fuse or circuit breaker. The fuse or circuit breaker must be sized in accordance with the maximum overcurrent protection specified on the unit rating plate. An electrical disconnect must be provided at the furnace location.

Connect hot, neutral, and ground wires as shown in the wiring diagram located on the unit's blower door. Metal conduit is not considered a substitute for an actual ground wire to the unit. For direct vent applications, the cabinet opening to the junction box must be sealed air tight using either an UL approved bushing such as Heyco Liquid Tight or by applying non-reactive UL approved sealant to bushing.

Line polarity must be observed when making field connections. Line voltage connections can be made through either the right or left side panel. The furnace is shipped configured for a left side (right side for counterflows) electrical connection with the junction box located inside the burner compartment. To make electrical connections through the opposite side of the furnace, the junction box must be relocated to the other side of the burner compartment prior to making electrical connections. To relocate the junction box, follow the steps shown in the Junction Box Relocation section.

WARNING

Edges of sheet metal holes may be sharp. Use gloves as a precaution when removing hole plugs.

WARNING

To prevent personal injury or death to electrical shock, disconnect electrical power before installing or servicing this unit.

WARNING

HIGH VOLTAGE
To avoid the risk of injury, electrical shock or death, the furnace must be electrically grounded in accordance with local codes or in their absence, with the latest edition of the National Electrical Code.



WARNING

To avoid the risk of injury, electrical shock or death, the furnace must be electrically grounded in accordance with local codes or, in their absence, with the latest edition of the National Electrical Code.

115 Volt Line Voltage Connection of Accessories (Humidifier and Electronic Air Cleaner)

The furnace integrated control module is equipped with line voltage accessory terminals for controlling power to an optional field-supplied humidifier and/or electronic air cleaner.

Turn OFF power to the furnace before installing any accessories. Follow the humidifier or air cleaner manufacturers' instructions for locating, mounting, grounding, and controlling these accessories. Accessory wiring connections are to be made through the ¼" quick connect terminals provided on the furnace integrated control module. The humidifier hot terminal is identified as 120V HUM-H, its neutral terminal is identified as 120V HUM-N. The electronic air cleaner hot terminal is identified as EAC-H, its neutral terminal is identified as 120V EAC-N. All field wiring must conform to applicable codes. Connections should be made as shown. (See Figure 32)

If it is necessary for the installer to supply additional line voltage wiring to the inside of the furnace, the wiring must conform to all local codes, and have a minimum temperature rating of 105°C. All line voltage wire splices must be made inside the furnace junction box.

The integrated control module humidifier terminal 120V HUM-H is energized with 115 volts whenever the induced draft blower is energized. This terminal can also be used to provide 115 volt power to a humidifier transformer. The remaining primary transformer wire would be connected to the Line N on the control board. The integrated control module electronic air cleaner terminals EAC-H is energized with 115 volts whenever the circulator blower is energized.

NOTE: Wire routing must not to interfere with circulator blower operation, filter removal, or routine maintenance.

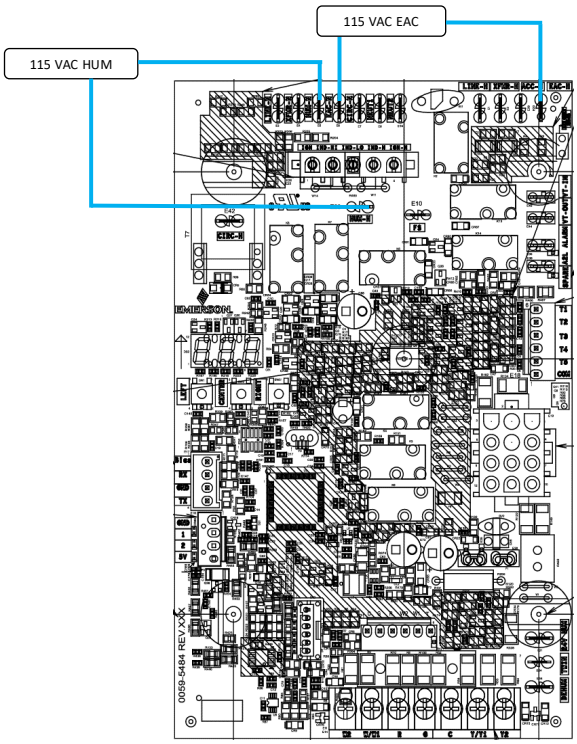

FIGURE 32

CONNECTION OF 24 VOLT HUMIDIFIER

The integrated control module single humidifier terminal “24 V HUM” is energized with 24 volts whenever the induced draft blower is energized. Connect the common side of the 24 volt humidifier to the “C” terminal of the thermostat terminal strip on the control board.

LOW VOLTAGE VENTILATION

The Ventilation connections provide dry contact for field ventilator wiring connections. These connections are normally open and energize during the R-32 fault/alarm condition. VT IN and VT OUT connectors are provided on the control board and are shown in the image below.

LOW VOLTAGE A2L ALARM

The A2L alarm connection provides 24VAC for field alarm wiring connections. These connections are normally open and energize during the R-32 fault/alarm condition. An A2L Alarm connection is provided on the control board and is shown in the image below.

FIELD INSTALLED ACCESSORIES

Additional accessories that do not have dedicated terminals on the furnace control board may require an additional daughter board to be installed. Please refer to service manual on your product for more information.

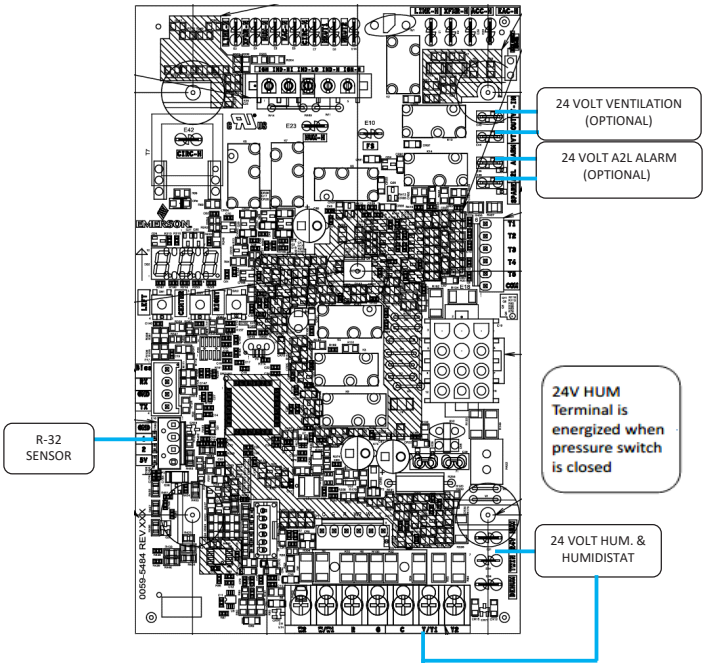

FIGURE 33

JUNCTION BOX RELOCATION

Line voltage connections can be made through either the right or left side panel. The furnace is shipped configured for a left side electrical connection. To make electrical connections through the opposite side of the furnace, the junction box must be relocated to the left side prior to making electrical connections. To relocate the junction box, perform the following steps.

1. Remove the burner compartment door.
2. Remove and save the two screws securing the junction box to the side panel.
3. Relocate junction box and associated plugs and grommets to opposite side panel. Secure with screws removed in step.

IMPORTANT NOTE: WIRE ROUTING MUST NOT INTERFERE WITH CIRCULATOR BLOWER OPERATION, FILTER REMOVAL OR ROUTINE MAINTENANCE.

To ensure proper unit grounding, the ground wire should run from the furnace ground screw located inside the furnace junction box all the way back to the electrical panel.

NOTE: DO NOT USE GAS PIPING AS AN ELECTRICAL GROUND. TO CONFIRM PROPER UNIT GROUNDING, TURN OFF THE ELECTRICAL POWER AND PERFORM THE FOLLOWING CHECK.

1. Measure resistance between the neutral (white) connection and one of the burners. Resistance should measure 10 ohms or less.

This furnace is equipped with a blower door interlock switch which interrupts unit voltage when the blower door is opened for servicing. Do not defeat this switch.

24 Volt Thermostat Wiring

IMPORTANT NOTE: Wiring routing must not interfere with circulator blower operation, filter removal or routine maintenance.

Low voltage connections can be made through either the right or left side panel. Thermostat wiring entrance holes are located in the blower compartment. The following figure shows connections for a “heat/cool system”.

This furnace is equipped with a 40 VA transformer to facilitate use with most cooling equipment. Consult the wiring diagram, located on the blower compartment door, for further details of 115 Volt and 24 Volt wiring.

Thermostat Wiring Diagrams

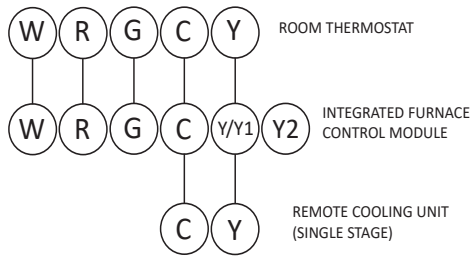

Thermostat - Single-Stage Heating with Single-Stage Cooling
Figure 34

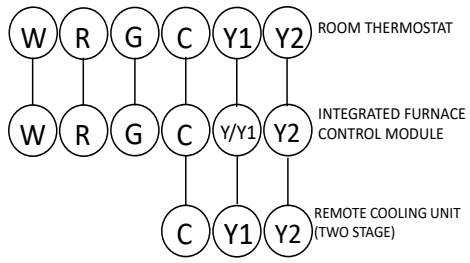

Thermostat - Single-Stage Heating with Two-Stage Cooling
Figure 35

WARNING

HIGH VOLTAGE
To avoid personal injury or death due to electrical shock, disconnect electrical power before servicing or changing any electrical wiring.



Fossil Fuel Applications

This furnace can be used in conjunction with a heat pump in a fossil fuel application. A fossil fuel application refers to a combined gas furnace and heat pump installation which uses an outdoor temperature sensor to determine the most cost efficient means of heating (heat pump or gas furnace).

A heat pump thermostat is required to properly use a single-stage furnace in conjunction with a heat pump. Refer to the fossil fuel kit installation instructions for additional thermostat requirements.

Strictly follow the wiring guidelines in the fossil fuel kit installation instructions. All furnace connections must be made to the furnace two-stage integrated control module and the “FURNACE” terminal strip on the fossil fuel control board.

Twinning

Two furnaces of the same model may be twinned. The integrated control board has a 3⁄16” terminal labeled “TWIN” located beside the low voltage thermostat connection strip. Twinning allows simultaneous operation of two furnaces and forces the indoor blower motors of each furnace to operate synchronously into a common duct system. Using the twinning function will require only field installed wiring with no external kits or parts. The staging and speed tap options must be set the same on both furnaces.

NOTE: Each furnace must be connected to it’s own 115 VAC power supply. The L1 connection to each furnace must be in phase (connected to circuit breakers on the same 115 VAC service panel phase leg). To verify that the furnaces are in phase, check from L1 to L1 on each furnace with a voltmeter. If the furnaces are in phase, the voltage between both furnaces will be ZERO.

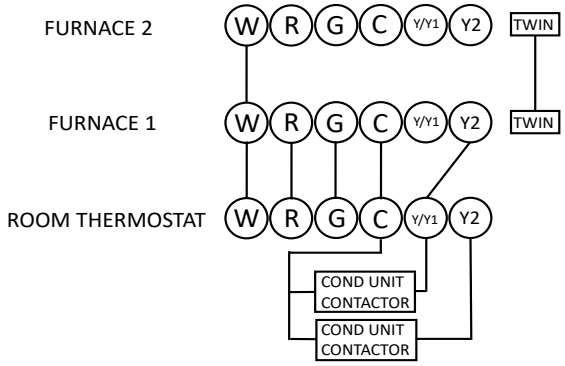

Figure 36

CAUTION

To prevent unreliable operation or equipment damage, the gas manifold pressure must be as specified on the unit rating plate. Only minor adjustments should be made by adjusting the gas valve pressure regulator.

WARNING

Possible property damage, personal injury or death may occur if the correct conversion kits are not installed. The appropriate kits must be applied to ensure safe and proper furnace operation. All conversions must be performed by a qualified installer or service agency.

R-32 INFORMATION

R-32 Function

This furnace is equipped with a control board that is capable of shutting off the gas heat and turning on the blower fan in case of an R-32 refrigerant leak in the indoor evaporator coil. If the cooling unit that is paired with this furnace does not utilize R-32 as the refrigerant, the R-32 functionalities in the furnace control board will need to be turned off for the furnace to run properly.
R-32 function on the control board is ON by default. The R-32 function can be disabled through the furnace control by entering the A2L Function Enabled menu and selecting “no”. If A2L function is disabled, the furnace control will ignore all A2L functions. If A2L function is enabled, the control will monitor the R-32 sensor information.
To enter the A2L Function Enabled menu, press the left or right switch until LED displays “A2E”. Press the center switch and the LED will display the selected option (yes or no). Press the left of rightswitch to select one of the two options and press the middle switch to confirm the option.

R-32 Sensor Wire Routing

IMPORTANT NOTE: Wiring routing must not interfere with circulator blower operation, filter removal or routine maintenance. Wire should not be routed near hot surfaces and should be protected from sharp edges.

The R-32 Sensor wire coming from the indoor evaporator coil will need to be routed into the furnace and connected to the connection point on the furnace control board. This wire should be routed alongside the thermostat wires through the low voltage openings in the left or right side of the furnace blower compartment. Please see the electrical section for the location of the R-32 Sensor connection on the control board.

Furnace Start-Up

During furnace start up, the furnace control will identify the connected R-32 sensor and will start monitoring the sensor communication. A green LED located next to the sensor connection will indicate if there is communication between the furnace control and the R-32 sensor. The LED will be ON during the duration of the startup and then will either start blinking or turn OFF. The blinking LED signifies that communication with the R-32 sensor is present. The LED OFF signifies that there is no signal with the sensor.

If there are no alarms or faults, the furnace will go into regular run mode after a warm up period. The furnace control monitors the R-32 sensor once per second.

R-32 Refrigerant Leak

If the R-32 sensor on the indoor evaporator coil detects a specified concentration of R-32 refrigerant, the furnace will enter Mitigation Mode to dilute the refrigerant concentrations in case of a leak. In Mitigation Mode, the furnace will do the following:

1. Display the A2L Refrigerant Leakage error code (EAL)
2. Shut down the gas operation
3. Energize the optional ventilation and alarm outputs
4. Run the fan at max CFM airflow

Once the R-32 sensor stops detecting a leak, the fan will continue to run for 5 minutes. After the 5 minutes, if there are no other alarms or faults, the control will de-energize the optional ventilation and alarm outputs and then go back to the original operating mode per the thermostat.

A2L Verification

The A2L Function Verification menu allows the installer to verify if the R-32 function operates properly. This menu simulates the refrigerant leak process and is only able to be used when there are no active alarms or faults. To verify the R-32 functions, enter the A2L Function Verification menu and select “YES”. To enter the A2L Function Verification menu, press the left or right switch until LED displays “A2u”. Press the center switch and the LED will display the selected option (yes or no). Press the left of right switch to select one of the two options and press the middle switch to confirm the option. Once “YES” is selected, the furnace will do the following:

1. Display the A2L Refrigerant Leakage code (EAL)
2. Shut down the gas operation
3. Energize the optional ventilation and alarm outputs
4. Run the fan at max CFM airflow

The control will exit the verification function if:

1. The 5 minute timeout expires or
2. An alarm or fault is detected or
3. The user turns OFF the A2L Function Verification.

GAS SUPPLY AND PIPING

INLET GAS SUPPLY PRESSURE		
Natural Gas	Minimum: 4.5" w.c.	Maximum: 10.0" w.c.
Propane Gas	Minimum: 11.0" w.c.	Maximum: 13.0" w.c.

The furnace rating plate includes the approved furnace gas input rating and gas types. The furnace must be equipped to operate on the type of gas applied. This includes any conversion kits required for alternate fuels and/or high altitude.

Inlet gas supply pressures must be maintained within the ranges specified in the following table. The supply pressure must be constant and available with all other household gas fired appliances operating. The minimum gas supply pressure must be maintained to prevent unreliable ignition. The maximum must not be exceeded to prevent unit overfiring.

WARNING

To avoid possible unsatisfactory operation of equipment damage due to underfiring or equipment, use the proper size of natural/propane gas piping needed when running pipe from the meter/tank to the furnace.

HIGH ALTITUDE INSTALLATION

When this furnace is installed at high altitude, the appropriate High Altitude Kit including orifices and a pressure switch(s) must be installed. These changes are necessary to compensate for the natural reduction in the density of both the gas fuel and the combustion air at higher altitude.

Installation of this furnace at altitudes above 7000 ft (2134 m), shall be made in accordance with the Listed High Altitude Conversion Kit available with this furnace.

Do not derate the furnace by adjusting the manifold pressure to a lower pressure than specified on the furnace rating plate. The combination of the lower air density and a lower manifold pressure will prohibit the burner orifice from drawing the proper amount of air into the burner. This may cause incomplete combustion, flashback, and yellow tipping.

In some areas the gas supplier may artificially derate the gas in an effort to compensate for the effects of altitude. If the gas is artificially derated, the appropriate orifice size must be determined based upon the BTU/ft³ content of the derated gas and the altitude. Refer to the National Fuel Gas Code, NFPA 54/ANSI Z223.1, and information provided by the gas supplier to determine the proper orifice size. A different pressure switch may be required at high altitude regardless of the BTU/ft³ content of the fuel used. Consult the furnace Specification Sheet. All conversions must be performed by a qualified installer, or service agency.

Propane Gas Conversion

This furnace is shipped from the factory configured for natural gas at standard altitude. To operate this furnace on L.P. gas, a LPM-33 LP Conversion kit must be used. Propane gas installations require an orifice and spring change to compensate for the energy content difference between natural and propane gas.

If converting to LP gas, a low pressure switch should be installed per the LP kit. This low pressure switch will prevent the furnace from firing when the LP gas supply pressure is too low to support proper combustion.

All conversions must be performed by a qualified installer, or service agency.

WARNING

Possible property damage, personal injury or death mat occur if the correct conversion kits are not installed. The appropriate kits must be applied to ensure safe and proper furnace operation. All conversions must be performed by a qualified installer or service agency.

Gas	Altitude	Kit	Orifice	Manifold Pressure	Pressure Switch Change
Natural	0-7000	None	#45	3.5" w.c.	None
Propane		LPM-33	1.25mm	10.0" w.c.	None

NOTE: In Canada, gas furnaces are only certified to 4500 feet.

Gas Valve

This unit is equipped with a 24 volt gas valve controlled during furnace operation by the integrated control module. As shipped, the valve is configured for natural gas. The valve is field convertible for use with propane gas by replacing the regulator spring with a propane gas spring from an appropriate manufacturer's propane gas conversion kit. Taps for measuring the gas supply pressure and manifold pressure are provided on the valve.

The gas valve has a manual ON/OFF control located on the valve itself. This control may be set only to the "ON" or "OFF" position. Refer to the lighting instructions label or Startup Procedure & Adjustment for use of this control during start up and shut down periods.

Gas Piping Connections

The gas piping supplying the furnace must be properly sized based on the gas flow required, specific gravity of the gas, and length of the run. The gas line installation must comply with local codes, or in their absence, with the latest edition of the National Fuel Gas Code, NFPA 54/ANSI Z223.1 or CAN/CSA B149.1-15 in Canada.

To connect the furnace to the building's gas piping, the installer must supply a ground joint union, drip leg, manual shutoff valve, and line and fittings to connect to gas valve. In some cases, the installer may also need to supply a transition piece from ½" pipe to a larger pipe size.

The following stipulations apply when connecting gas piping. Refer to *Gas Piping Connections* figure for typical gas line connections to the furnace.

- Gas piping must be supported external to the furnace cabinet so that the weight of the gas line does not distort the burner rack, manifold or gas valve.
- Use black iron or steel pipe and fittings for building piping. Where possible, use new pipe that is properly chamfered, reamed, and free of burrs and chips. If old pipe is used, be sure it is clean and free of rust, scale, burrs, chips, and old pipe joint compound.
- Use pipe joint compound on male threads ONLY. Always use pipe joint compound (pipe dope) that

is APPROVED FOR ALL GASES. DO NOT apply compound to the first two threads.

- Use ground joint unions.
- Install a drip leg to trap dirt and moisture before it can enter the gas valve. The drip leg must be a minimum of three inches long.
- Install a ⅛" NPT pipe plug fitting, accessible for test gauge connection, immediately upstream of the gas supply connection to the furnace.
- Always use a back-up wrench when making the connection to the gas valve to keep it from turning. The orientation of the gas valve on the manifold must be maintained as shipped from the factory. Maximum torque for the gas valve connection is 375 in-lbs; excessive over-tightening may damage the gas valve.
- Install a manual shutoff valve between the gas meter and unit within six feet of the unit. If a union is installed, the union must be downstream of the manual shutoff valve, between the shutoff valve and the furnace.
- Tighten all joints securely.

Natural Gas Capacity of Pipe
In Cubic Feet of Gas Per Hour (CFH)

Length of Pipe in Feet	Nominal Black Pipe Size				
	1/2"	3/4"	1"	1 1/4"	1 1/2"
10	132	278	520	1050	1600
20	92	190	350	730	1100
30	73	152	285	590	980
40	63	130	245	500	760
50	56	115	215	440	670
60	50	105	195	400	610
70	46	96	180	370	560
80	43	90	170	350	530
90	40	84	160	320	490
100	38	79	150	305	460

(Pressure 0.5 psig or less and pressure drop of 0.3" W.C.; Based on 0.60 Specific Gravity Gas)

$$CFH = \frac{\text{BTUH Furnace Input}}{\text{Heating Value of Gas (BTU/Cubic Foot)}}$$

- Connection method must be in compliance with all local and national codes. US: National Fuel Gas Code (NFGC) NFPA 54-2012/ANSI Z223.1-2012 and the Installation Standards, Warm Air Heating and Air Conditioning Systems ANSI/NFPA 90B.
  In Canada, CANADA: National Standard of Canada, Natural Gas and Propane Installation Code (NSCNGPIC) CSA B149.1-15.
  Connect the furnace to the building piping by one of the following methods:
  – Rigid metallic pipe and fittings.
  – Semi-rigid metallic tubing and metallic fittings. Aluminum alloy tubing must not be used in exterior locations. In order to seal the grommet cabinet penetration, rigid pipe must be used to reach the outside of the cabinet. A semi-rigid connector to the gas piping may be used from there.
- Use listed gas appliance connectors in accordance with their instructions. Connectors must be fully in the same room as the furnace.
- Protect connectors and semi-rigid tubing against physical and thermal damage when installed. Ensure aluminum-alloy tubing and connectors are coated to protect against external corrosion when in contact with masonry, plaster, or insulation, or subjected to repeated wetting by liquids such as water (except rain water), detergents, or sewage.

The gas piping may enter the left or right side of the furnace cabinet. The installer must supply rigid pipe long enough to reach the outside of the cabinet to seal the grommet cabinet penetration. A semi-rigid connector to the gas piping can be used outside the cabinet per local codes. ½" NPT pipe and fittings are required. For models with an "L" shaped manifold, a 4 ½" long nipple is required. For models with a hook shaped manifold, a 2" long nipple is required.

A semi-rigid connector to the gas piping can be used outside the cabinet per local codes. From the elbow, the length of pipe and the fittings required will vary by the side chosen, location of union and cabinet width. The union may be placed inside or outside of the cabinet.

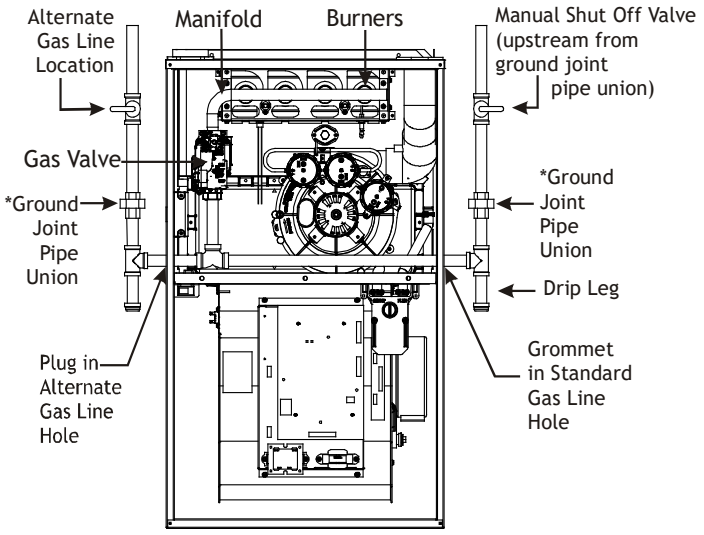

**NOTE: Union may be inside furnace cabinet where allowed by local codes.*

UPFLOW
FIGURE 37

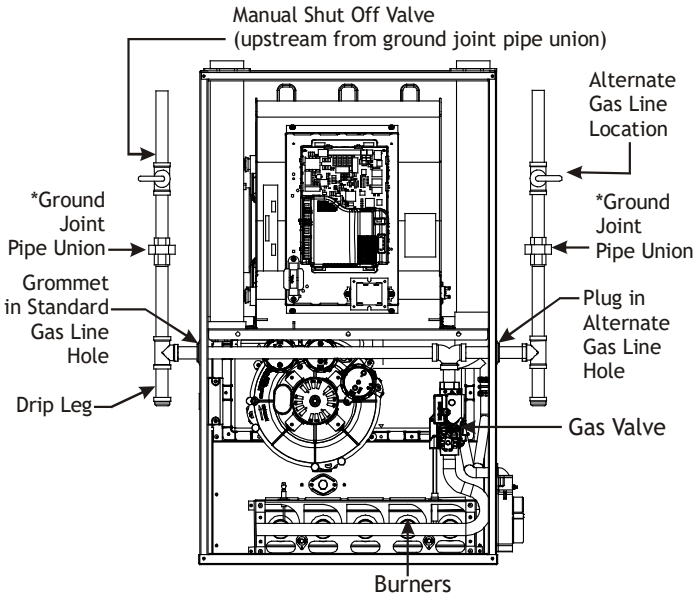

**NOTE: Union may be inside furnace cabinet where allowed by local codes.*

COUNTERFLOW
FIGURE 38

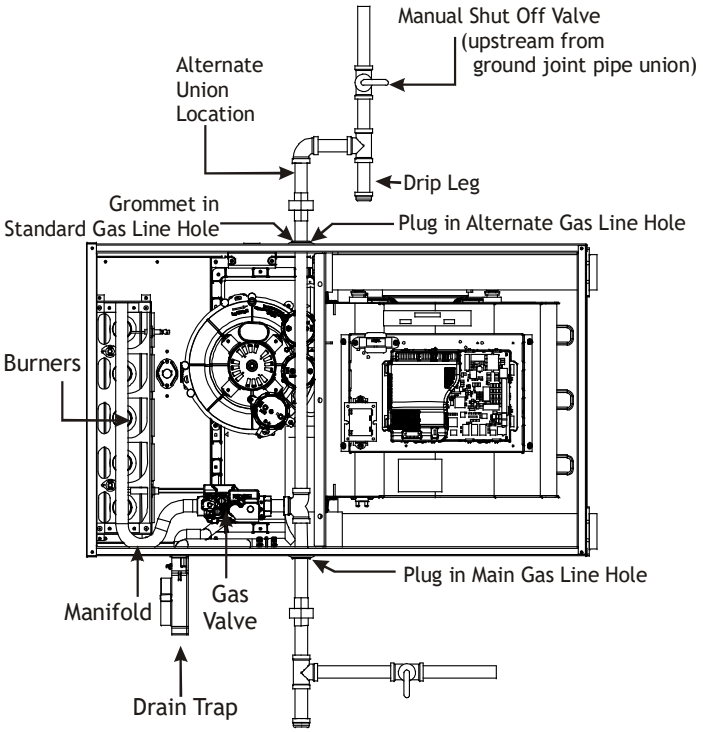

UPFLOW - HORIZONTAL LEFT
FIGURE 39

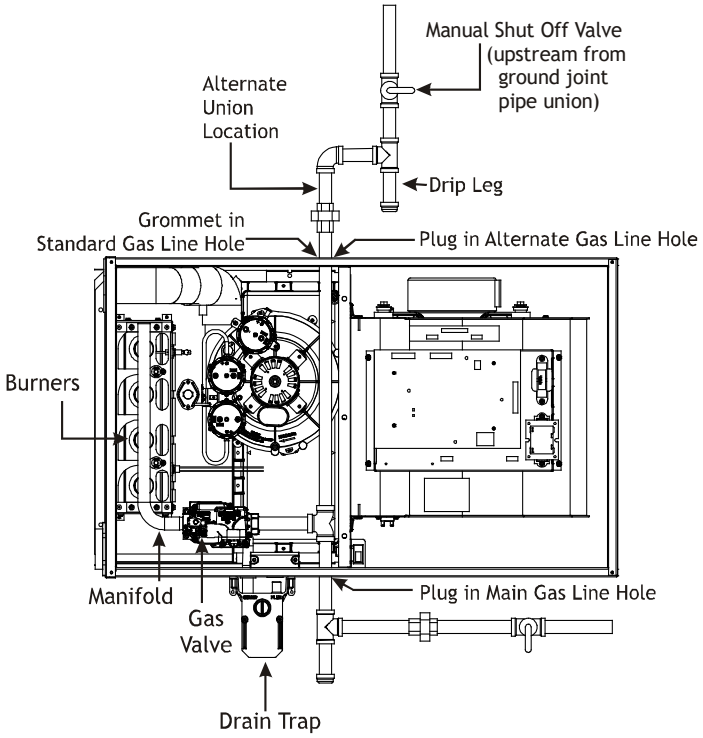

COUNTERFLOW - HORIZONTAL RIGHT
FIGURE 40

GAS PIPING CHECKS

Before placing unit in operation, leak test the unit and gas connections.

Check for leaks using an approved chloride-free soap and water solution, an electronic combustible gas detector, or other approved testing methods.

NOTE: NEVER EXCEED SPECIFIED PRESSURES FOR TESTING. HIGHER PRESSURE MAY DAMAGE THE GAS VALVE AND CAUSE SUBSEQUENT OVERFIRING, RESULTING IN HEAT EXCHANGER FAILURE.

Disconnect this unit and shutoff valve from the gas supply piping system before pressure testing the supply piping system with pressures in excess of ½ psig (3.48 kPa). Isolate this unit from the gas supply piping system by closing its external manual gas shutoff valve before pressure testing supply piping system with test pressures equal to or less than ½ psig (3.48 kPA).

⚠ WARNING

TO AVOID THE POSSIBILITY OF EXPLOSION OR FIRE, NEVER USE A MATCH OR OPEN FLAME TO TEST FOR LEAKS.

WARNING

If the gas furnace is installed in a basement, an excavated area or confined space, it is strongly recommended to contact a propane supplier to install a gas detecting warning device in case of a gas leak.

- **Since propane gas is heavier than air, any leaking gas can settle in any low areas or confined spaces.**
- **Propane gas odorant may fade, making the gas undetectable except with a warning device.**

Propane Gas Tanks and Piping

A gas detecting warning system is the only reliable way to detect a propane gas leak. Rust can reduce the level of odorant in propane gas. Do not rely on your sense of smell. Contact a local propane gas supplier about installing a gas detecting warning system. If the presence of gas is suspected, follow the instructions listed in the Safety Considerations section of this manual.

All propane gas equipment must conform to the safety standards of the National Board of Fire Underwriters, NBFU Manual 58.

CANADA: National Standard of Canada, Natural Gas and Propane Installation Code (NSCNGPIC) CSA B149.1-15.

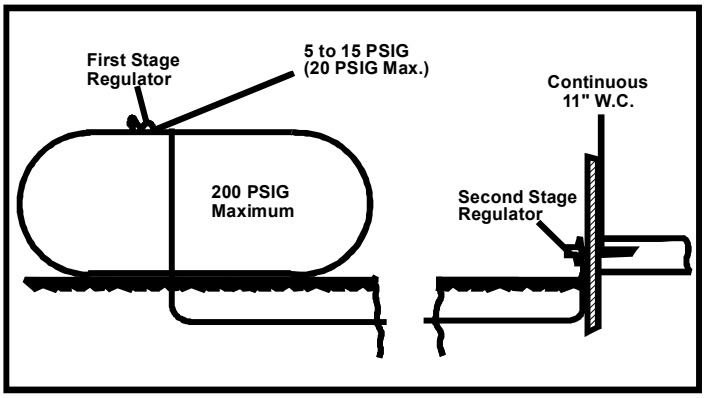

Propane Gas Installation (Typ.)
Figure 41

For satisfactory operation, propane gas pressure must be 10” WC at the furnace manifold with all gas appliances in operation. Maintaining proper gas pressure depends on three main factors:

1. Vaporization rate, depending on temperature of the liquid, and “wetted surface” area of the container or containers.
2. Proper pressure regulation (Two-stage regulation is recommended for both cost and efficiency).
3. Pressure drop in lines between regulators, and between second stage regulator and the appliance. Pipe size will depend on length of pipe run and total load of all appliances.

Complete information regarding tank sizing for vaporization, recommended regulator settings, and pipe sizing is available from most regulator manufacturers and propane gas suppliers.

Since propane gas will quickly dissolve white lead and most standard commercial compounds, special pipe dope must be used. Always use a pipe thread sealant approved for all gases.

Refer to the illustration for typical propane gas installations and piping.

WARNING

Never allow the products of combustion, including carbon monoxide, to enter the return ductwork or circulation air supply.

CIRCULATING AIR & FILTERS

Duct work - Air Flow

Duct systems and register sizes must be properly designed for the CFM and external static pressure rating of the furnace. Design the ductwork in accordance with the recommended methods of “Air Conditioning Contractors of America” Manual D.

Install the duct system in accordance with Standards of the National Board of Fire Underwriters for the Installation of Air Conditioning, Warm Air Heating and Ventilating Systems. Pamphlets No. 90A and 90B.

A closed return duct system must be used, with the return duct connected to the furnace. **NOTE:** Ductwork must never be attached to the back of the furnace. For upflow installations requiring 1800 CFM or more, use either two side returns or bottom return or a combination of side / bottom. Flexible joints may be used for supply and return connections to reduce noise transmission. To prevent the blower from interfering with combustion air or draft when a central return is used, a connecting duct must be installed between the unit and the utility room wall. Never use a room, closet, or alcove as a return air chamber.

Checking Duct Static

Refer to your furnace rating plate for the maximum ESP (external duct static) rating.

Total external static refers to everything external to the furnace cabinet. Cooling coils, filters, ducts, grilles, registers must all be considered when reading your total external static pressure. The supply duct pressure must be read between the furnace and the cooling coil. This reading is usually taken by removing the “A” shaped block off plate from the end on the coil; drilling a test hole in it and reinstalling the block off plate. Take a duct static reading at the test hole. Tape up the test hole after your test is complete. The negative pressure must be read between the filter and the furnace blower.

Too much external static pressure will result in insufficient air that can cause excessive temperature rise. This can

cause limit switch tripping and heat exchanger failure.

To determine total external duct static pressure, proceed as follows:

1. With clean filters in the furnace, use a manometer to measure the static pressure of the return duct at the inlet of the furnace. (Negative Pressure)
2. Measure the static pressure of the supply duct. (Positive Pressure)
3. The difference between the two numbers is .4" w.c.

EXAMPLE:

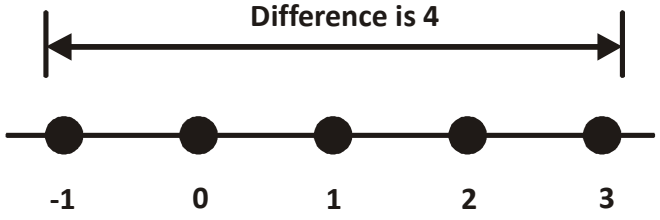

Static reading from return duct = -.1" w.c.

Static reading from supply duct = .3" w.c.

Total external static pressure on this system = .4" w.c.

NOTE: Both readings may be taken simultaneously and read directly on the manometer if so desired. If an air conditioner coil or Electronic Air Cleaner is used in conjunction with the furnace, the readings must also include theses components, as shown in the following drawing.

4. Consult proper tables for the quantity of air.

If the total external static pressure exceeds the maximum listed on the furnace rating plate, check for closed dampers, registers, undersized and/or oversized poorly laid out duct work.

The temperature rise of the furnace must be within the temperature rise range listed on the furnace rating plate.

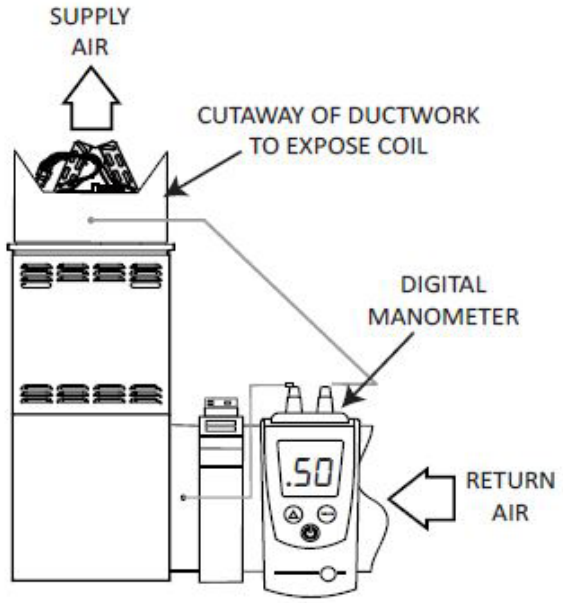

Checking Static Pressure (80% Furnace Shown, 90% Similar)
Figure 42

WARNING

Edges of sheet metal holes may be sharp. Use gloves as a precaution when removing sheet metal from return air openings.

Bottom Return Air Opening [Upflow Models]

The bottom return air opening on upflow models utilizes a "lance and cut" method to remove sheet metal from the duct opening in the base pan. To remove, simply press out the lanced sections by hand to expose the metal strips retaining the sheet metal over the duct opening. Using tin snips, cut the metal strips and remove the sheet metal covering the duct opening. In the corners of the opening, cut the sheet metal along the scribe lines to free the duct flanges. Using the scribe line along the duct flange as a guide, unfold the duct flanges around the perimeter of the opening using a pair of seamer pliers or seamer tongs.

NOTE: Airflow area will be reduced by approximately 18% if duct flanges are not unfolded. This could cause performance issues and noise issues.

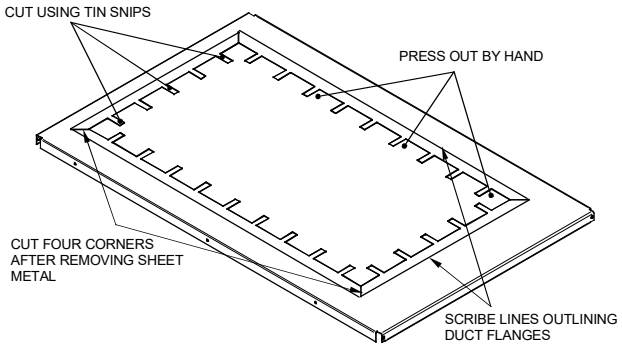

Duct Flange Cut Outs
Figure 43

When the furnace is used in connection with a cooling unit, the furnace should be installed in parallel with or on the upstream side of the cooling unit to avoid condensation in the heating element. With a parallel flow arrangement, the dampers or other means used to control the flow of air must be adequate to prevent chilled air from entering the furnace and, if manually operated, must be equipped with means to prevent operation of either unit unless the damper is in the full heat or cool position.

When the furnace is installed without a cooling coil, it is recommended that a removable access panel be provided in the outlet air duct. This opening shall be accessible when the furnace is installed and shall be of such a size that the heat exchanger can be viewed for visual light inspection or such that a sampling probe can be inserted into the air stream. The access panel must be made to prevent air leaks when the furnace is in operation.

When the furnace is heating, the temperature of the return air entering the furnace must be between 55°F and 100°F.

Filters - Read This Section Before Installing The Return Air Duct work

Filters must be used with this furnace. Discuss filter maintenance with the building owner. Filters do not ship with this furnace, but must be provided, sized and installed externally by the installer. Filters must comply with UL900 or CAN/ULCS111 standards. Damage or repairs due to the installation of the furnace without filters is not covered under the warranty.

On upflow units, guide dimples locate the side return cutout locations. Use a straight edge to scribe lines connecting the dimples. Cut out the opening on these lines. **NOTE:** An undersized opening will cause reduced airflow.

Refer to the Filter Sizing Chart to determine filter area requirements.

Filter Sizing Charts

Filter Sizing Chart	
Model	**Minimum Recommended Filter Size**
***R9S960403AN**	1 - 16 X 25 Side or 1 - 14 X 24 Bottom Return
***R9S960603BN**	1 - 16 X 25 Side or Bottom Return
***R9S960803BN**	1 - 16 X 25 Side or Bottom Return
***R9S960804CN**	1 - 16 X 25 Side or Bottom Return
***R9S960805CN**	2 - 16 X 25 Side or 1 - 20 X 25 Bottom Return
***R9S961005CN**	2 - 16 X 25 Side or 1 - 20 X 25 Bottom Return[1]
***R9S961205DN**	2 - 16 X 25 Side or 1 - 24 X 24 Bottom Return[1]
***D9S960403BN**	2 - 10 X 20 or 1 - 14 X 25 Top Return
***D9S960603BN**	2 - 10 X 20 or 1 - 14 X 25 Top Return
***D9S960804CN**	2 - 14 X 20 or 1 - 16 X 25 Top Return
***D9S961005CN**	2 - 14 X 20 or 1 - 20 X 25 Top Return
***D9S961205DN**	2 - 14 X 20 or 1 - 24 X 24 Top Return

Larger filters may be used, filters may also be centrally located.
[1] = use 2 - 16 X 25 filters and two side returns or 20 X 25 filter on bottom return or combination side & bottom if furnace is connected to a cooling unit over 4 tons nominal capacity

Filter Sizing Chart	
Model	**Minimum Recommended Filter Size**
***R9S920403AN**	1 - 16 X 25 Side or 1 - 14 X 24 Bottom Return
***R9S920603BN**	1 - 16 X 25 Side or Bottom Return
***R9S920803BN**	1 - 16 X 25 Side or Bottom Return
***R9S920804CN**	1 - 16 X 25 Side or Bottom Return
***R9S920805CN**	2 - 16 X 25 Side or 1 - 20 X 25 Bottom Return
***R9S921004CN**	1 - 16 X 25 Side or Bottom Return
***R9S921005CN**	2 - 16 X 25 Side or 1 - 20 X 25 Bottom Return[1]
***R9S921205DN**	2 - 16 X 25 Side or 1 - 24 X 24 Bottom Return[1]

Larger filters may be used, filters may also be centrally located.
[1] = use 2 - 16 X 25 filters and two side returns or 20 X 25 filter on bottom return or combination side & bottom if furnace is connected to a cooling unit over 4 tons nominal capacity

Change filters before occupants take ownership of a new home!

Consider installing an air cleaner with deep-pleated media filter at the time of furnace installation. A deep-pleated filter with a MERV rating of 8 (minimum) will often provide better filtration to protect equipment and the air distribution system than a standard 1” filter and often has lower static pressure loss than a 1” filter. Also a deep-pleated filter will typically require less frequent replacement intervals. Avoid using highly restrictive 1” filters which produce static pressure loss greater than .25” W.C. In some installations the minimum filter size required (consult filter sizing chart above) will not lend itself to a filter installation on the side of the furnace. The installation of a centrally installed air cleaner cabinet or a return duct filter installation may offer more practicality.

Clean Comfort™ brand MERV 11 air cleaners have 5¼” media filters and are available in the following configurations. Consult your distributor for information on our complete line of IAQ Clean Comfort™ products.

Depending on the installation and/or customer preference, differing filter arrangements can be applied. Filters can be installed in the central return register or a side panel external filter rack kit (upflows). As an alternative a media air filter or electronic air cleaner can be used as the requested filter.

The following figures show possible filter locations:

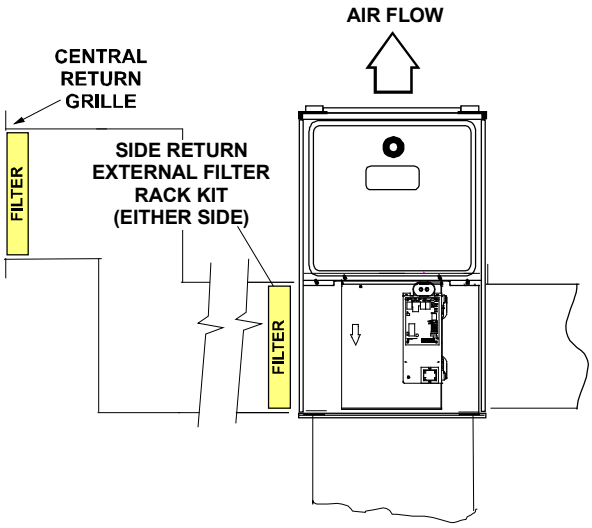

Possible Upright Upflow
Figure 44

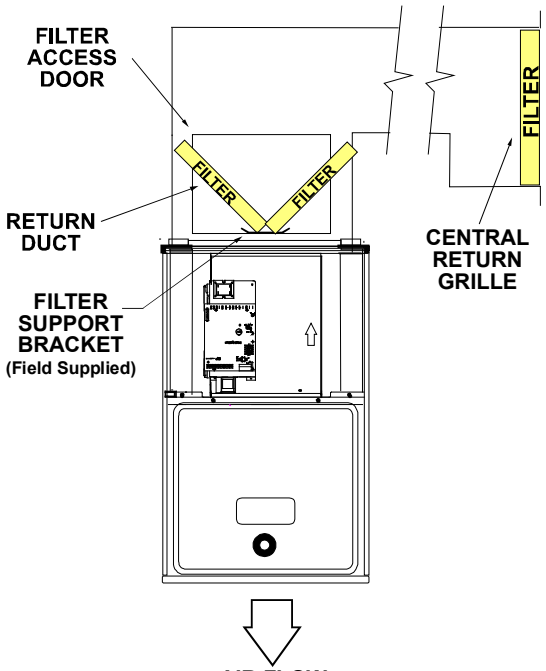

Possible Upright Counterflow Filter Locations
Figure 47

Horizontal Installations

Filters must be installed in either the central return register or in the return air duct work.

STARTUP PROCEDURE & ADJUSTMENT

Furnace must have a 115 VAC power supply properly connected and grounded. Proper polarity must be maintained for correct operation. In addition to the following start-up and adjustment items, refer to further information in Operational Checks section.

Furnace Cabinet

Check that all furnace cabinet sealing components are in place (plugs, grommets, gaskets). **NOTE:** If the furnace bottom panel has not been removed for a return duct connection, all perforations must be sealed with duct sealant compound or other suitable method to prevent air leakage. For optimal performance verify that all do gaskets are properly in place and replace as needed to prevent air leakage.

Drain Trap Priming

The drain trap must be primed prior to furnace startup. To prime, fill both sides of the drain trap with water. This ensures proper furnace drainage upon startup and prohibits the possibility of flue gases escaping through the drain system.

Furnace Operation

Purge gas lines of air prior to startup. Be sure not purge lines into an enclosed burner compartment. Follow NFPA 54, National Fuel Gas Code 8.1 for proper purging methods. In Canada, follow approved purging methods in B149.1-15.

Check for leaks using an approved chloride-free soap and water solution, an electronic combustible gas detector, or other approved method. Verify that all required kits (propane gas, high altitude, etc.) have been appropriately installed.

NOTE: This furnace is equipped with a control board that is capable of monitoring for R-32 refrigerant leaks in the indoor evaporator coil. Please verify that the R-32 sensor wire is plugged in to the furnace control board before startup, if applicable. If furnace is not paired with an R-32 Refrigeration system, the default settings in the furnace control board will need to be changed. Please see the R-32 section for additional information.

Furnace Startup

1. Close the manual gas shutoff valve external to the furnace.
2. Turn off the electrical power to the furnace.
3. Set the room thermostat to the lowest possible setting.
4. Remove the burner compartment door.

NOTE: This furnace is equipped with an ignition device which automatically lights the burner. Do not try to light the burner by hand.

5. Move the furnace gas valve manual control to the OFF position.
6. Wait five minutes then smell for gas. Be sure check near the floor as some types of gas are heavier than air.

7. If you smell gas after five minutes, immediately follow the safety instructions in the *Safety Considerations* on page 2 of this manual. If you do not smell gas after five minutes, move the furnace gas valve manual control to the ON position.
8. Replace the burner compartment door.
9. Open the manual gas shutoff valve external to the furnace.
10. Turn on the electrical power to the furnace.
11. Adjust the thermostat to a setting above room temperature.
12. After the burners are lit, set the thermostat to desired temperature.

Gas Heat Sequence of Operation

Call for Heat

- On a call for heat, the thermostat contacts close & the control board receives 24 VAC on the W terminal.
- The control board microcomputer runs its self-check routine.
- The control verifies the limit switch is closed (24 VAC on Pin 8 of the 12 Pin connector).
- The control verifies that pressure switch circuit is open (0 VAC on Pin 5).
- The control module performs a gas valve circuitry check to verify gas valve relay state and presence of voltage at the valve.
- The system will energize the Induced draft blower.
- The pre-purge period begins once the pressure switch is detected closed (24 VAC on Pin 5).
- After the completion of pre-purge, the control will energize the igniter.
- After completion of the ignitor warm-up period:
- The gas valve is energized.
- The ignitor is de-energized as soon as flame is sensed.
- After 30 seconds the indoor blower is energized on heating speed.
- When the thermostat is satisfied:
- The gas valve is de-energized.
- The inducer remains energized for the post purge period (15 seconds).
- The indoor blower runs for the selected off delay period (90 seconds by default, adjustable from 30 – 180 seconds).

Heating Mode Speed Selection

To change the main blower speed in HEATING mode, follow the following steps:

1. Press left or right button till LED displays “gA1” (for single stage HEATING). Press center button and LED will display the selected speed number as Fxx (xx: Blower speed number).
2. The control shall rotate available speed number every time Left/Right switches are pressed. Table below shows the available speeds for Low & High heat mode.
3. When the center switch is pressed, the current displayed speed shall be selected, and control shall apply the newly selected speed in next heating call.

NOTE: Always refer to the Heating Chart to choose from available heating speeds

THERMOSTAT CALL	AVAILABLE SPEEDS
W/W1	F01
	F02 (DEFAULT)
	F03
	F04

Heating Speed Table for 1 Stage IFC

Continuous Fan Mode Speed Selection

To change the main blower speed in circulation mode, follow the following steps:

1. Press the left or right switch until LED displays “FSd”. Press the center switch and LED will display the selected speed number as Fxx (xx: Blower speed number from 1 to 9). F01 is the default speed for circulation.
2. The control will rotate available speed number every time left/right switches are pressed. All 9 speeds are available for circulation.
3. When the center switch is pressed, the current displayed speed will be selected, and control will immediately apply that speed setting.

THERMOSTAT CALL	AVAILABLE SPEEDS
G	F01 (DEFAULT)
	F02
	F03
	F04
	F05
	F06
	F07
	F08
	F09

Circulation Speed Table

Cooling Mode Sequence of Operation

Low Stage Cooling Mode Sequence:

On a call for low stage cooling, the Y/Y1 or Y/Y1 and G thermostat contacts close signaling the furnace control board with 24 VAC on Y/Y1 or Y/Y1 and G terminals.

- The 7-Segment will display the cool mode: `1AC`
- The compressor and condenser fan are energized.
- The circulator fan is energized at low cool speed after a cool on delay. The electronic air cleaner will also be energized.

- After the thermostat is satisfied, the compressor is de-energized and the Cool Mode Fan Off Delay period begins.
- Following the Cool Mode Fan Off Delay period, the cool circulator and air cleaner relay are de-energized.

2nd Stage Cooling Mode Sequence:

On a call for 2nd stage cooling, the Y2 or Y2 and G thermostat contacts close signaling the furnace control board with 24 VAC on Y2 or Y2 and G terminals.

- The 7-Segment will display the cool mode: 2 A C
- The compressor and condenser fan are energized.
- The circulator fan is energized at cool speed after a cool on delay. The electronic air cleaner will also be energized.
- After the thermostat is satisfied, the compressor is de-energized and the Cool Mode Fan Off Delay period begins.
- Following the Cool Mode Fan Off Delay period, the cool circulator and air cleaner relay are de-energized

Cooling Mode Speed Selection

To change the main blower speed in COOLING mode, follow the following steps:

1. Press the left or right switch until LED displays “AC1” (for single stage COOLING) or “AC2” (for two-stage COOLING). Press the center switch and LED will display the selected speed number as Fxx (xx: Blower speed number from 1 to 9).
2. The control will rotate available speed number every time left/right switches are pressed. All 9 speeds are available for both Single and Two Stage cooling.
3. When the center switch is pressed, the current displayed speed will be selected, and control will apply the newly selected speed in next cooling call.

THERMOSTAT CALL	AVAILABLE SPEEDS
Y/Y1	F01
	F02
	F03
	F04 (DEFAULT)
	F05
	F06
	F07
	F08
	F09

Single-Stage Cooling Speed Table for 2 Stage IFC

THERMOSTAT CALL	AVAILABLE SPEEDS
Y2	F01
	F02
	F03
	F04
	F05 (DEFAULT)
	F06
	F07
	F08
	F09

Two-Stage Cooling Speed Table for 2 Stage IFC

Furnace Shutdown

1. Set the thermostat to the lowest setting. The integrated control will close the gas valve and extinguish flame. Following a 15 second delay, the induced draft blower will be de-energized. After the blower off delay time expires, the blower de-energizes.
2. Remove the burner compartment door and move the furnace gas valve manual control to the OFF position.
3. Close the manual gas shutoff valve external to the furnace.
4. Replace the burner compartment door.

GAS SUPPLY PRESSURE MEASUREMENT

Gas Pressure Test

The line pressure supplied to the gas valve must be within the range specified below. The supply pressure can be measured at the gas valve inlet pressure tap or at a hose fitting installed in the gas piping drip leg. The supply pressure must be measured with the burners operating. To measure the gas supply pressure, use the following procedure.

1. Turn OFF gas to furnace at the manual gas shutoff valve external to the furnace.
2. Connect a calibrated manometer (or appropriate gas pressure gauge) at either the gas valve inlet pressure tap or the gas piping drip leg. See White-Rodgers 36J22 gas valve figure for location of inlet pressure tap.

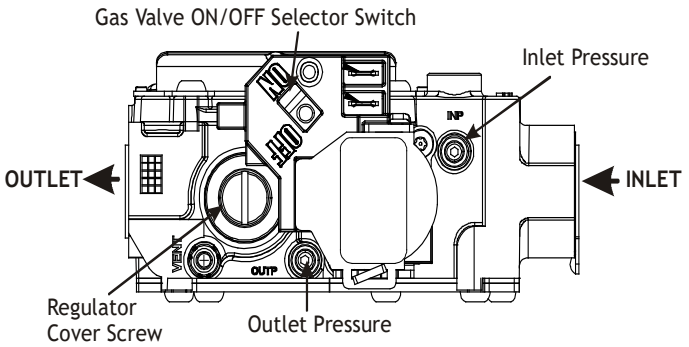

White-Rodgers Model 36J22
Figure 48

NOTE: If measuring gas pressure at the drip leg, a field-supplied hose barb fitting must be installed prior to making the hose connection. If using the inlet pressure tap on the White-Rodgers 36J22 gas valve, then use the 36G/J Valve Pressure Check Kit, Part No. 0151K00000S.

3. Turn ON the gas supply and operate the furnace and all other gas consuming appliances on the same gas supply line.
4. Measure furnace gas supply pressure with burners firing. Supply pressure must be within the range specified in the Inlet Gas Supply Pressure table.

Manifold Gas Pressure		
Gas	Range	Nominal
Natural	3.2 - 3.8" w.c.	3.5" w.c.
Propane	9.7 - 10.3" w.c.	10.0" w.c.

If supply pressure differs from table, make the necessary adjustments to pressure regulator, gas piping size, etc., and/or consult with local gas utility.

5. Turn OFF gas to furnace at the manual shutoff valve and disconnect manometer. Reinstall plug before turning on gas to furnace.
6. Turn OFF any unnecessary gas appliances stated in step 3.

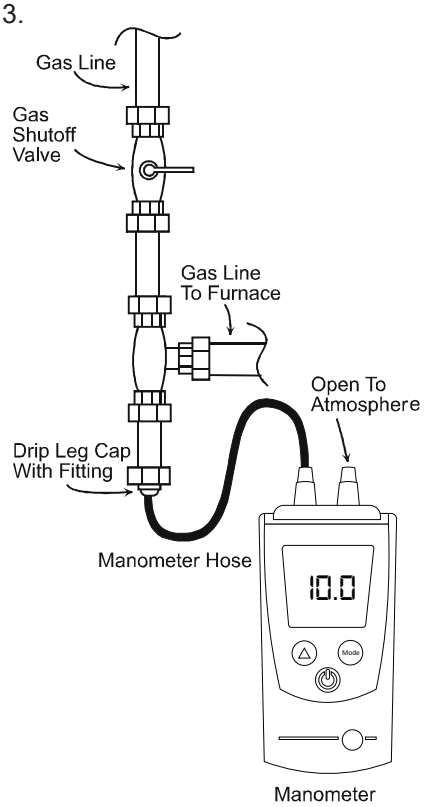

Gas Manifold Pressure Measurement and Adjustment

Only small variations in gas pressure should be made by adjusting the gas valve pressure regulator. The manifold pressure must be measured with the burners operating. To measure and adjust the manifold pressure, use the following procedure.

1. Turn OFF gas to fur nace at the manual gas shutoff valve external to the furnace.
2. Turn off all electrical power to the system.
3. Outlet pressure tap connections:
   White-Rodgers 36J22 valve: Back outlet pressure test screw (inlet/outlet pressure tap) out one turn (counterclockwise, not more than one turn).
4. Attach a hose and manometer to the outlet pressure tap (White-Rodgers valve).
5. Turn ON the gas supply.
6. Turn on power and close thermostat “R” and “W” contacts to provide a call for heat.
7. Measure the gas manifold pressure with burners firing. Adjust manifold pressure using the *Manifold Gas Pressure* table shown on this page.
8. Remove regulator cover screw from the outlet pressure regulator adjust tower and turn screw clockwise to increase pressure or counterclockwise to decrease pressure. Replace regulator cover screw.
9. Turn off all electrical power and gas supply to the system.
10. Remove the manometer hose from the hose barb fitting or outlet pressure tap.
11. Replace outlet pressure tap: White-Rodgers 36J22 valve: Turn outlet pressure test screw in to seal pressure port (clockwise, 7 in-lb minimum).
12. Turn on electrical power and gas supply to the system.
13. Close thermostat contacts “R” and “W” to energize the valve.

Using a leak detection solution or soap suds, check for leaks at outlet or screw (White-Rodgers valve). Bubbles forming indicate a leak. SHUT OFF GAS AND REPAIR ALL LEAKS IMMEDIATELY!

NOTE: For gas to gas conversion, consult your dealer for appropriate conversion.

CAUTION

To prevent unreliable operation or equipment damage, the inlet gas supply pressure must be as specified on the unit rating plate with all other household gas fired appliances operating.

Gas Input Rate Measurement (Natural Gas Only)

The actual gas input rate to the furnace must never be greater than that specified on the unit rating plate. To measure natural gas input using the gas meter, use the following procedure.

1. Turn OFF the gas supply to all other gas-burning appliances except the furnace.
2. While the furnace is operating at high fire rate, time and record one complete revolution of the gas meter dial, measuring the smallest quantity, usually the dial that indicates ½ cu. ft. per revolution. You will use this number to calculate the quantity of gas in cubic ft. if the furnace would consume if it ran steadily for one hour (3600 seconds).
3. If the ½ cu. ft. dial was used, multiply your number x 2. **EXAMPLE:** If it took 23 seconds to complete one revolution of the ½ ft. dial (23 x 2 = 46).

This tells us that at this rate, it would take 46 seconds to consume one cu. ft. of gas. 3600 / 46 = 78.

This tells us that in one hour, the furnace would consume 78 cu. ft. of gas.

The typical value range for 1 cu. ft. of natural gas is around 1000 BTU. Check with your gas utility, if possible. In this example, the furnace is consuming 78,000 BTUH.

NOTE: THE FINAL MANIFOLD PRESSURE CANNOT VARY BY MORE THAN ± 0.3" W.C. FOR NATURAL AND + 0.5" FOR LP FROM THE SPECIFIED SETTING. CONSULT YOUR LOCAL GAS SUPPLIER IF ADDITIONAL INPUT RATE ADJUSTMENT IS REQUIRED.

4. Turn ON gas to and relight all other appliances turned off in step 1. Be certain that all appliances are functioning properly and that all pilot burners are operating.

TEMPERATURE RISE

Temperature rise must be within the range specified on the unit rating plate. An incorrect temperature rise may result in condensing in or overheating of the heat exchanger. An airflow and temperature rise table is provided in the Specification Sheet applicable to your model. Determine and adjust temperature rise as follows:

1. Operate furnace with burners firing for approximately ten minutes. Ensure all registers are open and all duct dampers are in their final (fully or partially open) position.
2. Place thermometers in the return and supply ducts as close to the furnace as possible. Thermometers must not be influenced by radiant heat by being able to "see" the heat exchanger.
3. Subtract the return air temperature from the supply air temperature to determine the air temperature rise. Allow adequate time for thermometer readings to stabilize.
4. Adjust temperature rise by adjusting the circulator blower speed. Increase blower speed to reduce temperature rise. Decrease blower speed to increase temperature rise. Refer to Startup Procedure and Adjustment - Circulator Blower Speeds for speed changing details.

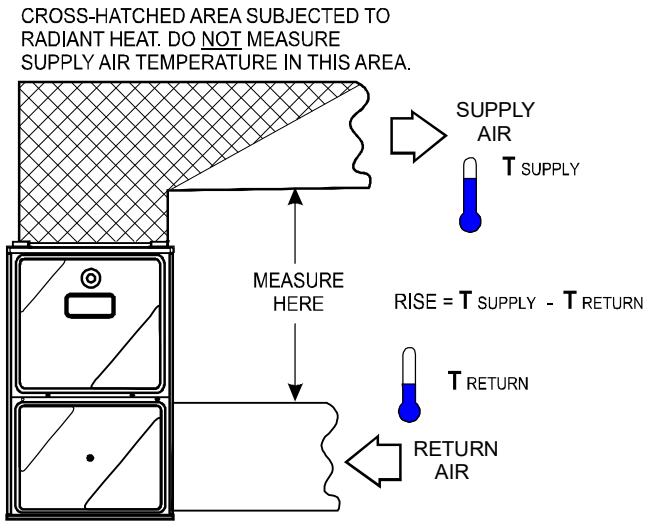

TEMPERATURE RISE MEASUREMENT
FIGURE 50

OPERATIONAL CHECKS

The burner flames should be inspected with the burner compartment door installed. Flames should be stable, quiet, soft, and blue (dust may cause orange tips but they must not be yellow). Flames should extend directly outward from the burners without curling, floating, or lifting off. Flames must not impinge on the sides of the heat exchanger firing tubes.

SAFETY CIRCUIT DESCRIPTION

A number of safety circuits are employed to ensure safe and proper furnace operation. These circuits serve to control any potential safety hazards and serve as inputs in the monitoring and diagnosis of abnormal function. These circuits are continuously monitored during furnace operation by the integrated control module.

WARNING

DO NOT BYPASS SAFETY DEVICES.

INTEGRATED CONTROL MODULE

The integrated control module is an electronic device which, if a potential safety concern is detected, will take the necessary precautions and provide diagnostic information through an LED.

PRIMARY LIMIT

The primary limit control is located on the partition panel and monitors heat exchanger compartment temperatures. It is a normally-closed (electrically), automatic reset, temperature-activated sensor. The limit guards against overheating as a result of insufficient conditioned air passing over the heat exchanger.

Auxiliary Limit
The auxiliary limit controls are located on or near the circulator blower and monitors blower compartment temperatures. They are a normally closed (electrically), manual reset sensors. These limits guard against overheating as a result of insufficient conditioned air passing over the heat exchanger.

Rollout Limit
The rollout limit controls are mounted on the burner/ manifold assembly and monitor the burner flame. They are normally closed (electrically), manual reset sensors. These limits guard against burner flames not being properly drawn into the heat exchanger.

Pressure Switches
The pressure switches are normally-open (closed during operation) negative air pressure-activated switches. They monitor the airflow (combustion air and flue products) through the heat exchanger via pressure taps located on the induced draft blower and the coil front cover. These switches guard against insufficient airflow (combustion air and flue products) through the heat exchanger and/or blocked condensate drain conditions.

Flame Sensor
The flame sensor is a probe mounted to the burner/ manifold assembly which uses the principle of flame rectification to determine the presence or absence of flame.

MAINTENANCE

Annual Inspection
The furnace should be inspected by a qualified installer, or service agency at least once per year. This check should be performed at the beginning of the heating season. This will ensure that all furnace components are in proper working order and that the heating system functions appropriately. Pay particular attention to the following items. Repair or service as necessary.

- Flue pipe system. Check for blockage and/or leakage. Check the outside termination and the connections at and internal to the furnace.
- Heat exchanger. Check for corrosion and/or buildup within the heat exchanger passageways.
- Burners. Check for proper ignition, burner flame, and flame sense.
- Drainage system. Check for blockage and/or leakage. Check hose connections at and internal to furnace.
- Wiring. Check electrical connections for tightness and/or corrosion. Check wires for damage.
- Filters.
- R-32 Sensor Wire. Check R-32 sensor wire connection for tightness and check wire for damage.

FILTERS

Filter Maintenance
Improper filter maintenance is the most common cause of inadequate heating or cooling performance. Filters should be cleaned (permanent) or replaced (disposable) every two months or as required. When replacing a filter, it must be replaced with a filter of the same type and size.

Filter Removal
Depending on the installation, differing filter arrangements can be applied. Filters can be installed in either the central return register or a side panel external filter rack (upflow only). A media air filter or electronic air cleaner can be used as an alternate filter. Follow the filter sizes given in the Recommended Minimum Filter size table to ensure proper unit performance.

To remove filters from an external filter rack in an upright upflow installation, follow the directions provided with external filter rack kit.

Horizontal Unit Filter Removal
Filters in horizontal installations are located in the central return register or the ductwork near the furnace.

To remove:

1. Turn OFF electrical power to furnace.
2. Remove filter(s) from the central return register or ductwork.
3. Replace filter(s) by reversing the procedure for removal.
4. Turn ON electrical power to furnace.

Media Air Filter or Electronic Air Cleaner Removal
Follow the manufacturer’s directions for service.

Burners
Visually inspect the burner flames periodically during the heating season. Turn on the furnace at the thermostat and allow several minutes for flames to stabilize, since any dislodged dust will alter the flames normal appearance. Flames should be stable, quiet, soft, and blue (dust may cause orange tips but they must not be yellow). They should extend directly outward from the burners without curling, floating, or lifting off. Flames must not impinge on the sides of the heat exchanger firing tubes.

Induced Draft and Circulator Blowers
The bearings in the induced draft blower and circulator blower motors are permanently lubricated by the manufacturer. No further lubrication is required. Check motor windings for accumulation of dust which may cause overheating. Clean as necessary.

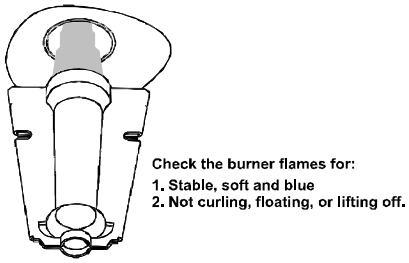

Burner Flame

Condensate Trap and Drain System (Qualified Servicer Only)

Annually inspect the drain tubes, drain trap, and field-supplied drain line for proper condensate drainage. Check drain system for hose connection tightness, blockage, and leaks. Clean or repair as necessary.

Flame Sensor (Qualified Servicer Only)

Under some conditions, the fuel or air supply can create a nearly invisible coating on the flame sensor. This coating acts as an insulator causing a drop in the flame sense signal. If the flame sense signal drops too low the furnace will not sense flame and will lock out. The flame sensor should be carefully cleaned by a qualified servicer using emery cloth or steel wool. Following cleaning, the flame sense signal should be as indicated in the Specifications Sheet.

Flue Passages (Qualified Servicer Only)

The heat exchanger flue passageways should be inspected at the beginning of each heating season.

BEFORE LEAVING AN INSTALLATION

- Cycle the furnace with the thermostat at least three times. Verify cooling and fan only operation.
- Review the Owner's Manual with the homeowner and discuss proper furnace operation and maintenance.
- Leave literature packet near furnace.

REPAIR AND REPLACEMENT PARTS

- When ordering any of the listed functional parts, be sure to provide the furnace model, manufacturing, and serial numbers with the order.
- Although only functional parts are shown in the parts list, all sheet metal parts, doors, etc. may be ordered by description.
- Parts are available from your distributor.

Functional Parts List-

Gas Valve	Blower Motor
Gas Manifold	Blower Wheel
Natural Gas Orifice	Blower Mounting Bracket
Propane Gas Orifice	Blower Cutoff
Igniter	Blower Housing
Flame Sensor	Pressure Switch
Rollout Limit Switch	Door Switch
Primary Limit Switch	Auxiliary Limit Switch
Coil Front Cover	Integrated Control Module
Transformer	Door Switch
Induced Draft Blower	
Heat Exchanger with Recuperator Coil	

1 STAGE STATUS CODES

Menu Description	LED Display		Notes
	Main Menu	Option Menu	
Active Alarm menu	**Er r**	**Exx**	(xx: code numbers)
Last 10 Faults	**F10**	**Exx**	(xx: code numbers)
Code Release Number	**Cr**	CR Number	
Reset to Factory Default	**r Fd**	**yes, no**	
Blower Speed for Continous Fan Mode	**FSd**	**Fxx**	(xx: Blower Speed Number F01, F02..)
Blower Speed for 1st Stage Compressor Mode	**AC1**	**Fxx**	(xx: Blower Speed Number F01, F02..)
Blower Speed for 2nd Stage Compressor Mode	**AC2**	**Fxx**	(xx: Blower Speed Number F01, F02..)
Cool On Delay	**Cnd**	Delay, Seconds	Default set at 7 Secs, Adjustments can be made in 7 Secs increments from 0 to 35 Secs
Cool Off Delay	**Cf d**	Delay, Seconds	Default set at 65 Secs, Adjustments can be made in 5 Secs increments from 0 to 120 Secs
Blower Speed for Gas Heat Mode	**gAF**	**Fxx**	(xx: Blower Speed Number F01, F02..)
Gas Heat On Delay	**gnd**	Delay, Seconds	Default set at 30 Secs, Adjustments can be made in 5 Secs increments from 5 to 30 Secs
Gas heat Off Delay	**gFd**	Delay, Seconds	Default set at 90 Secs, Adjustments can be made in 30 Secs increments from 30 to 180 Secs
Automatic Heat Staging - For Two Stage Control	**AHS**	no, 10, 20, 30, 60, AUt	Refer to Section " CHANGING HEATING MODE SETTING"
A2L Function Verification	**A2u**	**yes, no**	Refer to the R-32 Information Section
A2L Function Enabled	**A2E**	**yes, no**	Refer to the R-32 Information Section

1 STAGE STATUS CODES

STATUS MENU

Mode	Main Menu
Idle	**I dL**
Continous Fan	**FAn**
Compressor Cooling, Low Stage	**1AC**
Compressor Cooling, High Stage	**2AC**
Gas heat - Single Stage Control	**gH**
OEM test Mode	**EOL**

1 STAGE TROUBLESHOOTING CODES

Symptom	LED Status	Fault Description	Corrective Actions
Normal operation	I dL	Normal operation	None
Furnace fails to operate	EE0	Furnace lockout due to an excessive number of ignition “retries” (3 total) Failure to establish flame Loss of flame after establishment	Locate and correct gas interruption Check front cover pressure switch operation and verify proper drainage (hose, wiring, contact operation), correct if necessary Replace or realign igniter Check flame sense signal, clean sensor if coated or oxidized Check flue piping for blockage, proper length, elbows, and termination Verify proper induced draft blower performance
Furnace fails to operate	EE1	Pressure switch circuit is closed at start of heating cycle Pressure switch contacts sticking Short in pressure switch circuit wiring	Replace low stage pressure switch Repair short in wiring
Induced draft blower runs continuously with no furnace operation	EE2	Pressure switch circuit is not closed Pressure switch hose blocked pinched, or connected improperly Blocked flue and/or inlet air pipe, blocked drain system or weak induced draft blower Incorrect pressure switch set point or malfunctioning switch contacts Loose or improperly connected wiring	Inspect pressure switch hose, repair/replace if necessary Inspect flue and/or inlet air piping for blockage, proper length, elbows, and termination Check drain system, correct as necessary Check induced draft blower performance, correct as necessary Check pressure switch operation, replace as needed Tighten or correct wiring connection
Circulator blower runs continuously No furnace operation	EE3	Primary limit circuit is open Insufficient conditioned air over the heat exchanger Blocked filters, restrictive ductwork, improper circulator blower speed, or failed circulator blower motor Loose or improperly connected wiring in high limit circuit	Check filters and ductwork for blockage Clean filters or remove obstruction Check circulator blower speed and performance Correct speed or replace blower motor if necessary Tighten or correct wiring connection
Induced draft blower and circulator blower runs continuously No furnace operation	EE4	Flame sensed with no call for heat Short to ground in flame sense circuit Lingering burner flame Slow closing gas valve	Correct short at flame sensor or in flame sensor wiring Check for lingering or lazy flame Verify proper operation of gas valve

1 STAGE TROUBLESHOOTING CODES

Symptom	LED Status	Fault Description	Corrective Actions
No furnace operation	EE5	Open fuse Short in low voltage wiring	Replace fuse Locate and correct short in low voltage wiring
Normal furnace operation	EE6	Flame sense micro amp signal is minimal Flame sensor is coated/oxidized Flame sensor incorrectly positioned in burner fame Lazy burner flame due to improper gas pressure or combustion air	Clean flame sensor if coated or oxidized Inspect for proper flame sensor alignment Check inlet air piping for blockage, proper length, elbows, and termination Compare current gas pressure to rating plate and adjust as needed
Furnace fails to operate	EEL	Problem with igniter circuit Improperly connected or shorted igniter Poor unit ground Igniter relay fault on integrated control module	Check and correct wiring from integrated control module to igniter Diagnose and replace shorted igniter as needed Verify and correct unit ground wiring if needed Check igniter output from control, replace if necessary
Furnace fails to operate	EEA	Polarity of 115 volt AC is reversed Poor unit ground	Correct polarity, check and correct wiring if necessary Verify proper ground, correct if necessary
Furnace fails to operate	EEb	Gas valve is not energized when it should be External Gas Valve Error	Check wiring in gas valve circuit Replace integrated control board
Furnace fails to operate	EEC	Gas valve is energized when it should not be Internal gas valve error	Check wiring in gas valve circuit Replace integrated control board
Furnace fails to operate. Integrated control module LED display provides no signal	None	No 115 power to furnace or no 24 volt power to integrated control module. Blown fuse or tripped circuit breaker Integrated control module is non-functional	Restore high voltage power to furnace and integrated control module. Correct condition which caused fuse to open, replace fuse Replace non-functional integrated control module.
Furnace fails to operate	E10	Grounding fault Poor neutral connection	Verify neutral wire connection to furnace & continuity to ground source

1 STAGE TROUBLESHOOTING CODES

Symptom	LED Status	Fault Description	Corrective Actions
Furnace fails to operate	E11	Open roll out switch	Check for correct gas pressure Check for correct burner alignment Check for and correct burner restriction
Furnace fails to operate	EEn	Ignitor Open	Check for Ignitor wiring. Replace Damaged Ignitor
Furnace fails to operate	EEJ	Inducer relay Error	Replace integrated control board
Twinning feature not working	EEH	TWIN Error	Check for wiring connections. Replace integrated control board
Furnace fails to operate	EEE	Internal Faults or IRQ Loss in Control Board	Replace integrated control board
Furnace fails to operate and goes to hard lockout	EbL	Main blower motor is consuming very little current after heat on delay, below an expected value	Check for loose motor wiring connections. Verify if the blower motor is burnt, replace blower motor if found burnt
Furnace fails to operate and goes to hard lockout	EbU	Main blower motor is consuming too much current during inducer pre-purge, above an expected value.	Verify wiring connections to and from motor are not loose. Verify that line voltage wires to the control and the main blower motor are not reversed at the control.
Furnace stops heating and only the fan is operating	EAF	Furnace has lost communication with the R-32 sensor and the furnace is in mitigation mode.	Furnace may not be paired with an R-32 cooling unit. Refer to the R-32 Information Section. Verify wire connection to R-32 sensor is not loose. Verify that the R-32 sensor wire is not damaged. Replace R-32 Sensor.
Furnace stops heating and only the fan is operating	EAL	R-32 sensor has detected a refrigerant leak and furnace is in mitigation mode.	Investigate the indoor coil for a refrigerant leak. Furnace will resume normal operation once a leak is not detected and the 5 minute delay period is over.
Furnace stops heating and only the fan is operating	EAS	R-32 sensor has detected a fault and the furnace is in mitigation mode.	Investigate the R-32 sensor. Replace the R-32 sensor.
Furnace stops heating and only the fan is operating	Ear	A2L relay in the furnace control board has detected a fault and the furnace is in mitigation mode.	Investigate A2L relay. Cycle power on the furnace. Replace integrated control board.

To View & Clear Fault Codes

- Press either the Left or Right switch until L 6 F is displayed.
- Press the center switch to view stored faults.
- Press and hold the center switch for 5 to 30 seconds.
- All stored faults will be erased, and the display will flash - - - three times and return to L 6 F.

AIRFLOW TABLES

*D9S96

FAN & COOLING AIFLOW

MODEL	THERMOSTAT CALL	TAP #	EXTERNAL STATIC PRESSURE (INCHES WATER COLUMN)											
			0.1	0.2	0.3	0.4	0.5		0.6		0.7		0.8	
			CFM	CFM	CFM	CFM	CFM	Watts	CFM	Watts	CFM	Watts	CFM	Watts
D9S960403B	Y/Y1, Y2, G	F01	632	574	510	448	388	80	332	85	277	89	234	93
		F02	727	677	623	565	510	101	455	106	403	111	351	116
		F03	878	839	797	751	701	146	653	151	607	157	561	162
		F04^	948	910	870	828	785	169	739	175	693	181	652	187
		F05	1106	1076	1044	1010	974	243	939	250	899	256	860	263
		F06	1156	1125	1096	1063	1028	268	996	276	960	282	927	290
		F07	1237	1205	1174	1145	1115	317	1081	324	1050	332	1016	341
		F08	1334	1306	1275	1249	1220	385	1194	391	1163	398	1136	408
		F09	1382	1354	1327	1302	1276	418	1246	424	1219	432	1190	439
D9S960603B	Y/Y1, Y2, G	F01	771	698	632	560	491	104	428	110	372	115	307	119
		F02	1197	1150	1102	1057	1014	254	968	262	926	272	877	279
		F03	1309	1264	1224	1180	1141	318	1098	325	1058	334	1018	343
		F04^	1138	1091	1043	993	949	227	901	235	853	243	805	249
		F05	944	884	824	774	716	151	660	158	605	163	554	169
		F06	963	907	852	803	745	160	689	166	639	173	587	179
		F07	1332	1289	1245	1200	1160	327	1120	335	1081	343	1036	353
		F08	1366	1319	1277	1235	1192	347	1154	354	1117	363	1074	371
		F09	1468	1436	1393	1359	1323	418	1285	427	1248	436	1210	445
D9S960804C	Y/Y1, Y2, G	F01	873	778	682	630	578	90	490	94	419	100	347	105
		F02	1442	1386	1335	1280	1221	288	1157	297	1110	307	1054	316
		F03	1643	1588	1534	1478	1415	339	1357	350	1299	361	1246	375
		F04^	1600	1555	1505	1460	1412	375	1364	384	1309	395	1260	403
		F05	1338	1269	1206	1133	1063	211	999	220	934	229	861	239
		F06	1796	1744	1691	1638	1584	430	1532	441	1473	453	1422	462
		F07	1874	1823	1775	1729	1675	482	1621	492	1567	500	1512	517
		F08	1798	1754	1719	1672	1627	500	1585	510	1546	520	1497	530
		F09	1991	1947	1900	1854	1808	573	1759	585	1707	592	1655	606
D9S961005C	Y/Y1, Y2, G	F01	1176	1107	1037	969	891	184	825	194	753	201	692	207
		F02	1773	1721	1671	1621	1571	465	1521	474	1470	485	1421	495
		F03	1709	1658	1607	1556	1503	426	1451	436	1399	445	1349	455
		F04^	1651	1597	1542	1491	1437	392	1384	401	1332	410	1278	421
		F05	1467	1409	1352	1307	1240	297	1182	306	1124	315	1063	325
		F06	1834	1785	1738	1691	1643	513	1593	522	1545	532	1502	543
		F07	1924	1881	1836	1796	1750	583	1701	592	1652	602	1606	614
		F08	2028	1994	1937	1899	1863	683	1814	690	1769	702	1724	713
		F09	2193	2145	2106	2076	2032	844	1998	852	1945	862	1903	874
D9S961205D	Y/Y1, Y2, G	F01	1187	1101	1013	931	847	165	764	174	677	180	604	186
		F02	1973	1916	1864	1810	1756	502	1702	513	1650	525	1590	536
		F03	1918	1859	1807	1748	1696	463	1643	476	1591	486	1531	497
		F04^	1835	1776	1720	1657	1602	414	1544	425	1483	436	1428	447
		F05	1236	1152	1073	990	919	181	834	190	749	198	679	204
		F06	1521	1459	1391	1327	1253	271	1187	281	1116	291	1053	302
		F07	1673	1609	1549	1493	1430	345	1362	354	1305	365	1242	375
		F08	2033	1981	1929	1878	1822	541	1771	553	1716	565	1669	578
		F09	2257	2201	2151	2099	2057	704	2008	719	1959	732	1906	742

RECOMMENDED AIRFLOW SPEEDS FOR CONNECTION WITH 2 STAGE OUTDOOR MODELS		
FURNACE MODEL	Y2	Y1
*D9S961005CN	F06	F01
*D9S961205DN	F04	F05

NOTE:

1. F04 is Default Speed for Y/Y1
2. F05 is Default Speed for Y2
3. F01 is Default Speed for G
4. For a single-stage outdoor unit, the Y connection from the thermostat can be connected to the Y/Y1 or Y2 connection on the furnace control module. A call for cooling will energize that connection on the furnace control module. The desired cooling fan speed should be adjusted for the furnace control module connection used (Y1 or Y2) to provide the correct cooling airflow.

AIRFLOW TABLES

*D9S96

HEATING AIRFLOW															
MODEL	TSTAT CALL	TAP #	EXTERNAL STATIC PRESSURE, (INCHES WATER COLUMN)												TEMP RANGE
			0.1		0.2		0.3		0.4		0.5		0.6	0.7	0.8	
			CFM	RISE	CFM	RISE	CFM	RISE	CFM	RISE	CFM	RISE	CFM	CFM	CFM	
D9S960403B	W/W1	F01^^	632	N/A	574	N/A	510	N/A	448	N/A	388	N/A	332	277	234	35-65
		F02^	727	48	677	51	623	54	565	60	510	65	455	403	351	
		F03	878	41	839	42	797	45	751	47	701	51	653	607	561	
		F04	948	38	910	39	870	41	828	43	785	45	739	693	652	
D9S960603B	W/W1	F01^^	771	N/A	698	N/A	632	N/A	560	N/A	491	N/A	428	372	307	35-65
		F02^	1197	45	1150	46	1102	48	1057	50	1014	53	968	926	877	
		F03	1309	41	1264	42	1224	44	1180	45	1141	47	1098	1058	1018	
		F04	1138	47	1091	49	1043	51	993	54	949	56	901	853	805	
D9S960804C	W/W1	F01^^	873	N/A	778	N/A	682	N/A	630	N/A	578	N/A	490	419	347	40-70
		F02^	1442	49	1386	51	1335	53	1280	56	1221	58	1157	1110	1054	
		F03	1643	43	1588	45	1534	46	1478	48	1415	50	1357	1299	1246	
		F04	1600	44	1555	46	1505	47	1460	49	1412	50	1364	1309	1260	
D9S961005C	W/W1	F01^^	1176	N/A	1107	N/A	1037	N/A	969	N/A	891	N/A	825	753	692	40-70
		F02^	1773	50	1721	52	1671	53	1621	55	1571	57	1521	1470	1421	
		F03^^	1709	52	1658	54	1607	55	1556	57	1503	59	1451	1399	1349	
		F04	1651	54	1597	56	1542	58	1491	60	1437	62	1384	1332	1278	
D9S961205D	W/W1	F01^^	1187	N/A	1101	N/A	1013	N/A	931	N/A	847	N/A	764	677	604	45-75
		F02^	1973	54	1916	56	1864	57	1810	59	1756	61	1702	1650	1590	
		F03	1918	56	1859	57	1807	59	1748	61	1696	63	1643	1591	1531	
		F04	1835	58	1776	60	1720	62	1657	64	1602	67	1544	1483	1428	

NOTE:
^DEFAULT & RECOMMENDED
^^NOT RECOMMENDED FOR HEATING

AIRFLOW TABLES

*R9S92

FAN & COOLING AIFLOW													
MODEL	THERMOSTAT CALL	TAP #	EXTERNAL STATIC PRESSURE (INCHES WATER COLUMN)										
			0.1	0.2	0.3	0.4	0.5		0.6		0.7		0.8	
			CFM	CFM	CFM	CFM	CFM	Watts	CFM	Watts	CFM	Watts	CFM	Watts
R9S920403A	Y/Y1, Y2, G	F01	610	559	513	467	419	84	368	89	316	95	285	98
		F02	925	887	852	818	787	181	754	187	720	192	685	200
		F03	846	808	772	737	703	149	667	155	630	161	594	167
		F04^	781	739	701	663	625	129	586	133	547	139	508	144
		F05	1038	1003	970	940	909	232	879	239	849	245	820	251
		F06	1106	1072	1041	1011	981	271	953	278	926	285	898	291
		F07	1215	1180	1151	1121	1095	336	1066	343	1043	352	1017	361
		F08	1238	1210	1180	1153	1126	360	1099	368	1073	376	1047	383
		F09	1319	1299	1273	1246	1220	429	1194	436	1169	444	1146	455
R9S920603B	Y/Y1, Y2, G	F01	723	663	604	539	476	93	404	99	347	104	291	110
		F02	1052	1010	962	920	875	181	829	189	785	198	740	206
		F03	1125	1084	1042	1003	964	211	918	218	875	227	834	237
		F04^	1206	1166	1129	1091	1054	249	1012	258	977	267	947	277
		F05	901	854	809	758	703	136	653	145	604	151	552	159
		F06	948	900	855	810	762	149	708	156	662	164	608	172
		F07	1273	1237	1206	1169	1128	286	1094	294	1057	302	1020	311
		F08	1365	1321	1292	1251	1219	331	1184	341	1152	349	1120	358
		F09	1426	1387	1360	1326	1292	374	1257	383	1226	392	1193	400
R9S920803B	Y/Y1, Y2, G	F01	718	662	611	551	486	99	419	104	358	111	300	115
		F02	1373	1341	1307	1279	1253	410	1226	414	1197	420	1172	428
		F03	1309	1265	1232	1192	1162	324	1129	332	1093	337	1057	347
		F04^	1233	1194	1165	1131	1097	309	1070	317	1039	324	1008	330
		F05	874	828	791	750	703	147	655	153	602	157	547	164
		F06	950	908	865	826	786	168	739	175	689	181	638	188
		F07	1097	1056	1019	988	952	236	921	243	880	248	842	255
		F08	1166	1127	1092	1060	1027	268	994	276	960	281	926	286
		F09	1407	1373	1338	1308	1282	424	1253	431	1229	438	1203	446
R9S920804C	Y/Y1, Y2, G	F01	804	740	670	586	501	93	407	98	347	103	0	0
		F02	1422	1375	1332	1288	1245	271	1200	281	1154	290	1108	299
		F03	1502	1455	1410	1365	1322	304	1278	314	1237	325	1195	335
		F04^	1567	1519	1476	1441	1402	339	1360	349	1319	361	1278	371
		F05	1347	1299	1253	1205	1157	238	1111	245	1063	255	1013	263
		F06	1692	1648	1609	1567	1529	406	1490	416	1451	428	1413	440
		F07	1772	1728	1689	1652	1614	456	1574	462	1534	474	1498	486
		F08	1793	1753	1720	1679	1643	470	1604	479	1562	489	1524	500
		F09	1875	1833	1797	1759	1727	529	1686	539	1652	552	1616	563
R9S920805C	Y/Y1, Y2, G	F01	869	782	684	575	482	100	395	104	331	110	122	58
		F02	1823	1776	1720	1679	1642	409	1597	424	1553	442	1504	456
		F03	1778	1729	1690	1648	1605	398	1558	412	1497	425	1449	439
		F04^	1722	1660	1609	1553	1507	350	1455	369	1402	383	1350	395
		F05	1498	1442	1388	1332	1278	264	1215	277	1154	290	1090	301
		F06	1634	1583	1536	1489	1440	325	1387	339	1330	351	1275	365
		F07	1925	1879	1836	1795	1752	471	1711	489	1664	503	1621	521
		F08	1993	1941	1899	1852	1813	508	1778	525	1741	545	1693	560
		F09	2216	2172	2131	2087	2046	663	2011	681	1973	697	1935	717
R9S921004C	Y/Y1, Y2, G	F01	809	740	669	603	536	98	449	105	377	110	319	115
		F02	1754	1707	1673	1640	1604	487	1568	493	1538	505	1509	514
		F03	1648	1620	1586	1552	1515	426	1480	435	1449	442	1412	454
		F04^	1558	1517	1479	1441	1403	368	1366	378	1330	386	1295	396
		F05	1303	1255	1210	1167	1125	241	1081	250	1041	260	999	271
		F06	1406	1362	1321	1281	1240	283	1197	291	1157	301	1118	311
		F07	1445	1403	1363	1324	1287	307	1247	315	1208	325	1167	336
		F08	1778	1743	1700	1669	1634	508	1600	518	1568	530	1542	544
		F09	1824	1785	1747	1714	1680	536	1647	548	1617	559	1585	568
R9S921005C	Y/Y1, Y2, G	F01	906	813	717	613	519	103	439	109	368	114	0	0
		F02	1871	1818	1769	1720	1667	435	1614	446	1565	459	1511	468
		F03	1831	1782	1729	1679	1624	413	1571	424	1520	437	1465	449
		F04^	1653	1596	1538	1480	1422	324	1362	335	1306	346	1247	357
		F05	1496	1437	1376	1315	1250	259	1189	269	1126	279	1056	288
		F06	1640	1587	1527	1471	1414	314	1357	324	1294	336	1235	347
		F07	1955	1937	1909	1860	1813	513	1765	527	1712	541	1662	553
		F08	2086	2039	1991	1944	1896	574	1855	588	1810	593	1763	607
		F09	2222	2178	2133	2088	2043	683	1998	699	1954	711	1910	727
R9S921205D	Y/Y1, Y2, G	F01	1056	962	866	772	666	130	574	136	501	143	429	150
		F02	2096	2050	2005	1948	1899	532	1848	545	1800	559	1755	575
		F03	2023	1973	1927	1877	1829	488	1781	501	1731	515	1680	532
		F04^	1946	1900	1848	1795	1741	441	1689	455	1637	470	1584	485
		F05	1231	1151	1078	992	913	171	812	181	725	189	651	196
		F06	1503	1440	1382	1318	1251	256	1179	270	1108	281	1039	293
		F07	1704	1646	1586	1532	1473	328	1412	340	1346	357	1284	372
		F08	1831	1775	1720	1668	1610	388	1560	401	1511	413	1457	430
		F09	2222	2173	2125	2078	2029	607	1980	622	1933	636	1884	652

RECOMMENDED AIRFLOW SPEEDS FOR CONNECTION WITH 2 STAGE OUTDOOR MODELS		
FURNACE MODEL	Y2	Y1
*R9S921205DN	F08	F05

NOTE:

1. F04 is Default Speed for Y/Y1

2. F05 is Default Speed for Y2

3. F01 is Default Speed for G

4. For a single-stage outdoor unit, the Y connection from the thermostat can be connected to the Y/Y1 or Y2 connection on the furnace control module. A call for cooling will energize that connection on the furnace control module. The desired cooling fan speed should be adjusted for the furnace control module connection used (Y1 or Y2) to provide the correct cooling airflow.

AIRFLOW TABLES

*R9S92

HEATING AIRFLOW															
MODEL	TSTAT CALL	TAP #	EXTERNAL STATIC PRESSURE, (INCHES WATER COLUMN)												TEMP RANGE
			0.1		0.2		0.3		0.4		0.5		0.6	0.7	0.8	
			CFM	RISE	CFM	RISE	CFM	RISE	CFM	RISE	CFM	RISE	CFM	CFM	CFM	
R9S920403A	W/W1	F01^^	610	56	559	N/A	513	N/A	467	N/A	419	N/A	368	316	285	30-60
		F02^	925	37	887	38	852	40	818	42	787	43	754	720	685	
		F03	846	40	808	42	772	44	737	46	703	49	667	630	594	
		F04	781	44	739	46	701	49	663	51	625	55	586	547	508	
R9S920603B	W/W1	F01^^	723	N/A	663	N/A	604	N/A	539	N/A	476	N/A	404	347	291	35-65
		F02^	1052	49	1010	51	962	53	920	56	875	58	829	785	740	
		F03	1125	45	1084	47	1042	49	1003	51	964	53	918	875	834	
		F04	1206	42	1166	44	1129	45	1091	47	1054	48	1012	977	947	
R9S920803B	W/W1	F01^^	718	N/A	662	N/A	611	N/A	551	N/A	486	N/A	419	358	300	35-65
		F02^	1373	50	1341	51	1307	52	1279	53	1253	54	1226	1197	1172	
		F03	1309	52	1265	54	1232	55	1192	57	1162	59	1129	1093	1057	
		F04	1233	55	1194	57	1165	59	1131	60	1097	62	1070	1039	1008	
R9S920804C	W/W1	F01^^	804	N/A	740	N/A	670	N/A	586	N/A	501	N/A	407	347	N/A	35-65
		F02^	1422	48	1375	50	1332	51	1288	53	1245	55	1200	1154	1108	
		F03	1502	45	1455	47	1410	48	1365	50	1322	52	1278	1237	1195	
		F04	1567	44	1519	45	1476	46	1441	47	1402	49	1360	1319	1278	
R9S920805C	W/W1	F01^^	869	N/A	782	N/A	684	N/A	575	N/A	482	N/A	395	331	122	25-55
		F02^	1823	37	1776	38	1720	40	1679	41	1642	41	1597	1553	1504	
		F03	1778	38	1729	39	1690	40	1648	41	1605	42	1558	1497	1449	
		F04	1722	40	1660	41	1609	42	1553	44	1507	45	1455	1402	1350	
R9S921004C	W/W1	F01^^	809	N/A	740	N/A	669	N/A	603	N/A	536	N/A	449	377	319	35-65
		F02^	1754	49	1707	50	1673	51	1640	52	1604	53	1568	1538	1509	
		F03	1648	52	1620	53	1586	54	1552	55	1515	56	1480	1449	1412	
		F04	1558	55	1517	56	1479	58	1441	59	1403	61	1366	1330	1295	
R9S921005C	W/W1	F01^^	906	N/A	813	N/A	717	N/A	613	N/A	519	N/A	439	368	N/A	35-65
		F02^	1871	46	1818	47	1769	48	1720	50	1667	51	1614	1565	1511	
		F03	1831	47	1782	48	1729	49	1679	51	1624	52	1571	1520	1465	
		F04^^	1653	52	1596	53	1538	55	1480	58	1422	60	1362	1306	1247	
R9S921205D	W/W1	F01^^	1056	N/A	962	N/A	866	N/A	772	N/A	666	N/A	574	501	429	35-65
		F02^	2096	49	2050	50	2005	51	1948	52	1899	54	1848	1800	1755	
		F03	2023	51	1973	52	1927	53	1877	54	1829	56	1781	1731	1680	
		F04^^	1946	53	1900	54	1848	55	1795	57	1741	59	1689	1637	1584	

NOTE:
^DEFAULT & RECOMMENDED
^^NOT RECOMMENDED FOR HEATING

AIRFLOW TABLES

*R9S96

FAN & COOLING AIFLOW													
MODEL	THERMOSTAT CALL	TAP #	EXTERNAL STATIC PRESSURE (INCHES WATER COLUMN)										
			0.1	0.2	0.3	0.4	0.5		0.6		0.7		0.8	
			CFM	CFM	CFM	CFM	CFM	Watts	CFM	Watts	CFM	Watts	CFM	Watts
R9S960403A	Y/Y1, Y2, G	F01	705	661	617	564	509	103	455	108	405	115	362	120
		F02	1079	1055	1027	994	965	256	935	264	906	271	863	277
		F03	915	881	846	814	780	174	737	180	695	186	652	193
		F04^	887	855	823	790	751	164	705	170	666	176	608	183
		F05	1135	1106	1078	1049	1021	281	994	290	965	299	933	306
		F06	1189	1163	1138	1111	1085	321	1059	331	1032	341	1001	349
		F07	1266	1243	1218	1197	1172	372	1148	383	1123	394	1099	400
		F08	1313	1288	1261	1239	1215	403	1189	412	1165	422	1143	432
		F09	1342	1324	1305	1280	1263	440	1239	452	1216	463	1193	473
R9S960603B	Y/Y1, Y2, G	F01	758	696	636	572	512	104	460	110	412	115	354	121
		F02	1218	1178	1140	1100	1060	275	1016	284	977	292	937	299
		F03	1164	1123	1084	1042	1003	249	960	258	920	268	871	276
		F04^	1121	1083	1041	996	953	230	906	236	861	245	818	252
		F05	902	851	801	746	689	145	637	153	585	158	542	164
		F06	960	917	864	812	764	164	708	171	661	179	614	184
		F07	1273	1240	1207	1171	1128	309	1089	318	1051	327	1012	336
		F08	1335	1301	1266	1228	1192	347	1154	356	1118	365	1078	373
		F09	1427	1390	1362	1327	1297	408	1260	414	1224	423	1193	434
R9S960803B	Y/Y1, Y2, G	F01	715	658	589	524	465	93	412	99	360	104	279	108
		F02	1415	1385	1355	1322	1291	394	1255	403	1219	407	1186	417
		F03	1388	1360	1325	1291	1259	375	1223	385	1191	393	1157	403
		F04^	1290	1252	1215	1182	1143	311	1107	319	1071	329	1032	337
		F05	916	867	817	767	710	147	657	154	608	159	563	166
		F06	985	940	892	842	797	169	746	176	693	184	649	190
		F07	1118	1078	1037	992	952	222	910	230	863	239	822	247
		F08	1191	1153	1114	1074	1034	255	993	264	951	272	911	281
		F09	1471	1440	1409	1377	1347	427	1314	436	1283	446	1247	456
R9S960804C	Y/Y1, Y2, G	F01	1019	952	878	796	706	138	619	144	542	150	485	157
		F02	1791	1743	1700	1663	1626	472	1583	487	1538	499	1489	510
		F03	1625	1559	1512	1468	1425	359	1370	369	1325	385	1271	395
		F04^	1537	1490	1447	1403	1354	326	1301	337	1247	347	1190	357
		F05	1289	1234	1180	1122	1058	217	991	226	917	234	840	242
		F06	1431	1375	1329	1283	1227	276	1169	285	1108	295	1043	304
		F07	1836	1784	1741	1703	1664	496	1628	515	1585	528	1537	540
		F08	1919	1890	1846	1807	1771	566	1735	585	1694	600	1650	613
		F09	1952	1921	1885	1843	1804	590	1769	611	1731	629	1691	643
R9S960805C	Y/Y1, Y2, G	F01	1029	959	890	811	727	149	647	157	579	163	511	170
		F02	1814	1766	1722	1679	1637	486	1595	502	1555	517	1511	531
		F03	1893	1844	1803	1763	1723	541	1685	556	1641	569	1604	588
		F04^	1738	1680	1637	1596	1554	437	1510	452	1469	465	1420	477
		F05	1193	1135	1087	1016	950	198	880	208	805	217	738	225
		F06	1421	1369	1323	1272	1222	283	1168	295	1108	306	1045	318
		F07	1582	1536	1491	1445	1404	358	1358	370	1309	382	1255	395
		F08	1962	1919	1889	1851	1816	601	1780	620	1743	638	1702	655
		F09	2068	2024	1986	1947	1912	692	1873	709	1837	726	1797	744
R9S961005C	Y/Y1, Y2, G	F01	1008	934	855	779	702	142	628	148	557	155	493	161
		F02	2026	1981	1929	1901	1858	659	1819	677	1773	685	1733	701
		F03	1921	1879	1840	1791	1751	577	1705	588	1656	604	1610	617
		F04^	1804	1755	1710	1664	1619	490	1574	502	1526	514	1479	524
		F05	1475	1421	1369	1314	1260	307	1207	317	1152	326	1097	337
		F06	1626	1578	1522	1475	1427	381	1353	390	1328	401	1283	412
		F07	1693	1639	1588	1542	1491	422	1437	432	1390	442	1340	453
		F08	1775	1723	1674	1629	1580	472	1529	485	1484	497	1435	508
		F09	2161	2122	2084	2048	2010	739	1973	755	1940	776	1914	796
R9S961205D	Y/Y1, Y2, G	F01	1118	1035	952	860	750	149	663	156	590	165	519	171
		F02	2143	2095	2047	2002	1954	619	1891	632	1850	647	1802	663
		F03	2025	1977	1930	1897	1848	539	1798	553	1750	567	1703	583
		F04^	1906	1877	1828	1778	1726	474	1674	487	1622	501	1568	515
		F05	1220	1145	1070	995	907	177	811	187	725	194	651	201
		F06	1684	1620	1561	1499	1438	345	1378	358	1318	371	1259	383
		F07	1766	1712	1666	1612	1558	387	1506	401	1450	412	1395	425
		F08	1863	1807	1754	1698	1642	432	1587	445	1532	459	1476	472
		F09	2454	2396	2347	2296	2250	889	2202	905	2157	922	2113	941

RECOMMENDED AIRFLOW SPEEDS FOR CONNECTION WITH 2 STAGE OUTDOOR MODELS		
FURNACE MODEL	Y2	Y1
*R9S960805CN	F02	F05
*R9S961205DN	F08	F05

NOTE:

1. F04 is Default Speed for Y/Y1
2. F05 is Default Speed for Y2
3. F01 is Default Speed for G
4. For a single-stage outdoor unit, the Y connection from the thermostat can be connected to the Y/Y1 or Y2 connection on the furnace control module. A call for cooling will energize that connection on the furnace control module. The desired cooling fan speed should be adjusted for the furnace control module connection used (Y1 or Y2) to provide the correct cooling airflow.

AIRFLOW TABLES

*R9S96

HEATING AIRFLOW															
MODEL	TSTAT CALL	TAP #	EXTERNAL STATIC PRESSURE, (INCHES WATER COLUMN)												TEMP RANGE
			0.1		0.2		0.3		0.4		0.5		0.6	0.7	0.8	
			CFM	RISE	CFM	RISE	CFM	RISE	CFM	RISE	CFM	RISE	CFM	CFM	CFM	
R9S960403A	W/W1	F01^^	705	50	661	54	617	N/A	564	N/A	509	N/A	455	405	362	25-55
		F02^	1079	33	1055	34	1027	35	994	36	965	37	935	906	863	
		F03	915	39	881	40	846	42	814	44	780	46	737	695	652	
		F04	887	40	855	42	823	43	790	45	751	47	705	666	608	
R9S960603B	W/W1	F01^^	758	N/A	696	N/A	636	N/A	572	N/A	512	N/A	460	412	354	35-65
		F02^	1218	44	1178	45	1140	47	1100	48	1060	50	1016	977	937	
		F03	1164	46	1123	47	1084	49	1042	51	1003	53	960	920	871	
		F04	1121	48	1083	49	1041	51	996	54	953	56	906	861	818	
R9S960803B	W/W1	F01^^	715	N/A	658	N/A	589	N/A	524	N/A	465	N/A	412	360	279	35-65
		F02^	1415	50	1385	51	1355	52	1322	54	1291	55	1255	1219	1186	
		F03	1388	51	1360	52	1325	54	1291	55	1259	57	1223	1191	1157	
		F04	1290	55	1252	57	1215	59	1182	60	1143	62	1107	1071	1032	
R9S960804C	W/W1	F01^^	1019	N/A	952	N/A	878	N/A	796	N/A	706	N/A	619	542	485	25-55
		F02^	1791	40	1743	41	1700	42	1663	43	1626	44	1583	1538	1489	
		F03	1625	44	1559	46	1512	47	1468	48	1425	50	1370	1325	1271	
		F04	1537	46	1490	48	1447	49	1403	51	1354	53	1301	1247	1190	
R9S960805C	W/W1	F01^^	1029	N/A	959	N/A	890	N/A	811	N/A	727	N/A	647	579	511	25-55
		F02^	1814	39	1766	40	1722	41	1679	42	1637	43	1595	1555	1511	
		F03	1893	38	1844	39	1803	39	1763	40	1723	41	1685	1641	1604	
		F04	1738	41	1680	42	1637	43	1596	45	1554	46	1510	1469	1420	
R9S961005C	W/W1	F01^^	1008	N/A	934	N/A	855	N/A	779	N/A	702	N/A	628	557	493	30-60
		F02^	2026	44	1981	45	1929	46	1901	47	1858	48	1819	1773	1733	
		F03	1921	46	1879	47	1840	48	1791	50	1751	51	1705	1656	1610	
		F04	1804	49	1755	51	1710	52	1664	53	1619	55	1574	1526	1479	
R9S961205D	W/W1	F01^^	1118	N/A	1035	N/A	952	N/A	860	N/A	750	N/A	663	590	519	35-65
		F02^	2143	50	2095	51	2047	52	2002	53	1954	55	1891	1850	1802	
		F03	2025	53	1977	54	1930	55	1897	56	1848	58	1798	1750	1703	
		F04^^	1906	56	1877	57	1828	58	1778	60	1726	62	1674	1622	1568	

NOTE:
^DEFAULT & RECOMMENDED
^^NOT RECOMMENDED FOR HEATING

HIGH VOLTAGE!
Disconnect ALL power before servicing or installing this unit. Multiple power sources may be present. Failure to do so may cause property damage, personal injury or death.

WARNING

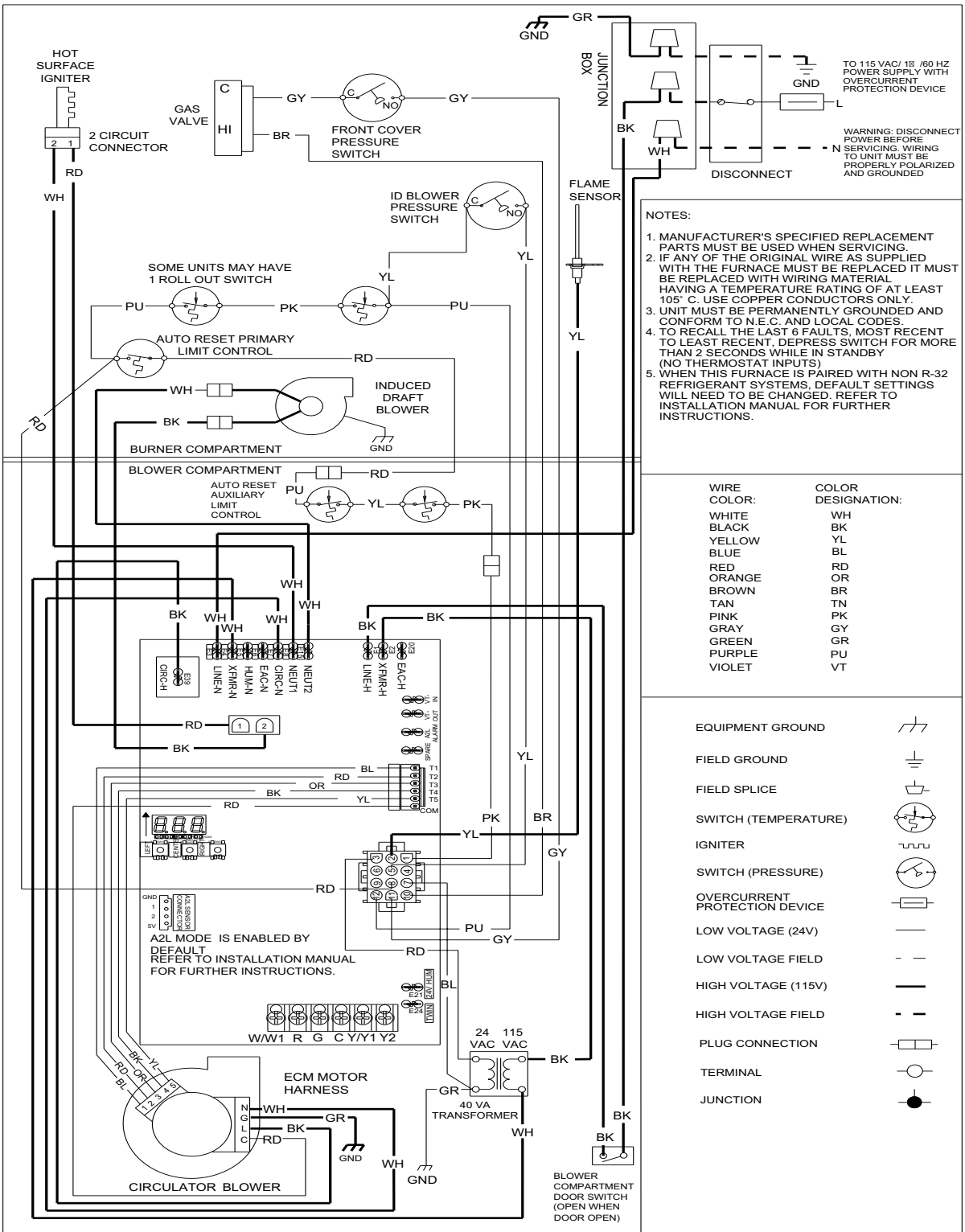

NOTES:

1. MANUFACTURER'S SPECIFIED REPLACEMENT PARTS MUST BE USED WHEN SERVICING.
2. IF ANY OF THE ORIGINAL WIRE AS SUPPLIED WITH THE FURNACE MUST BE REPLACED IT MUST BE REPLACED WITH WIRING MATERIAL HAVING A TEMPERATURE RATING OF AT LEAST 105° C. USE COPPER CONDUCTORS ONLY.
3. UNIT MUST BE PERMANENTLY GROUNDED AND CONFORM TO N.E.C. AND LOCAL CODES.
4. TO RECALL THE LAST 6 FAULTS, MOST RECENT TO LEAST RECENT, DEPRESS SWITCH FOR MORE THAN 2 SECONDS WHILE IN STANDBY (NO THERMOSTAT INPUTS)
5. WHEN THIS FURNACE IS PAIRED WITH NON R-32 REFRIGERANT SYSTEMS, DEFAULT SETTINGS WILL NEED TO BE CHANGED. REFER TO INSTALLATION MANUAL FOR FURTHER INSTRUCTIONS.

WIRE COLOR:	COLOR DESIGNATION:
WHITE	WH
BLACK	BK
YELLOW	YL
BLUE	BL
RED	RD
ORANGE	OR
BROWN	BR
TAN	TN
PINK	PK
GRAY	GY
GREEN	GR
PURPLE	PU
VIOLET	VT

EQUIPMENT GROUND
FIELD GROUND
FIELD SPLICE
SWITCH (TEMPERATURE)
IGNITER
SWITCH (PRESSURE)
OVERCURRENT PROTECTION DEVICE
LOW VOLTAGE (24V)
LOW VOLTAGE FIELD
HIGH VOLTAGE (115V)
HIGH VOLTAGE FIELD
PLUG CONNECTION
TERMINAL
JUNCTION

ERROR CODE STATUS READ CODES FROM LEFT TO RIGHT	SEVEN SEGMENT DISPLAY Seg#3	Seg#2	Seg#1
INTERNAL FAULTS OR IRQ LOSS	E	E	E
LOCKOUT DUE TO EXCESSIVE RETRIES RECYCLE	E	E	0
PRESSURE SWITCH STUCK CLOSED	E	E	1
PRESSURE SWITCH OPEN	E	E	2
OPEN HIGH LIMIT SWITCH	E	E	3
FLAME DETECTED WHEN NO FLAME SHOULD BE PRESENT	E	E	4
OPEN FUSE	E	E	5
LOW FLAME SIGNAL	E	E	6
IGNITOR RELAY FAULT	E	E	L
REVERSED LINE POLARITY OR GROUNDING ERROR	E	E	A
INTERNAL GAS VALVE ERROR	E	E	b
EXTERNAL GAS VALVE ERROR	E	E	C
OPEN ROLLOUT SWITCH	E	1	1
IGNITOR OPEN	E	E	n
INDUCER RELAY ERROR	E	E	J

ERROR CODE STATUS READ CODES FROM LEFT TO RIGHT	SEVEN SEGMENT DISPLAY Seg#3	Seg#2	Seg#1
TWIN ERROR	E	E	H
GROUNDING ERROR	E	1	0
LOW CIRCULATOR CURRENT	E	b	L
CIRCULATOR CURRENT UNEXPECTED	E	b	U
A2L COMMUNICATION ALARM	E	A	F
A2L LEAKAGE ALARM	E	A	L
A2L INTERNAL ALARM	E	A	S
A2L RELAY ALARM	E	A	r

0140F20003-B

Wiring is subject to change. Always refer to the wiring diagram on the unit for the most up-to-date wiring.

SPECIAL INSTRUCTIONS FOR PRODUCTS INSTALLED IN THE STATE OF MASSACHUSETTS

For all side wall horizontally vented gas fueled equipment installed in every dwelling, building or structure used in whole or in part for residential purposes, including those owned or operated by the Commonwealth and where the side wall exhaust vent termination is less than seven (7) feet above finished grade in the area of the venting, including but not limited to decks and porches, the following requirements shall be satisfied:

1. INSTALLATION OF CARBON MONOXIDE DETECTORS. At the time of installation of the side wall horizontal vented gas fueled equipment, the installing plumber or gasfitter shall observe that a hard wired carbon monoxide detector with an alarm and battery back-up is installed on the floor level where the gas equipment is to be installed. In addition, the installing plumber or gasfitter shall observe that a battery operated or hard wired carbon monoxide detector with an alarm is installed on each additional level of the dwelling, building or structure served by the side wall horizontal vented gas fueled equipment. It shall be the responsibility of the property owner to secure the services of qualified licensed professionals for the installation of hard wired carbon monoxide detectors
   a. In the event that the side wall horizontally vented gas fueled equipment is installed in a crawl space or an attic, the hard wired carbon monoxide detector with alarm and battery back-up may be installed on the next adjacent floor level.
   b. In the event that the requirements of this subdivision can not be met at the time of completion of installation, the owner shall have a period of thirty (30) days to comply with the above requirements; provided, however, that during said thirty (30) day period, a battery operated carbon monoxide detector with an alarm shall be installed.
2. APPROVED CARBON MONOXIDE DETECTORS. Each carbon monoxide detector as required in accordance with the above provisions shall comply with NFPA 720 and be ANSI/UL 2034 listed and IAS certified.
3. SIGNAGE. A metal or plastic identification plate shall be permanently mounted to the exterior of the building at a minimum height of eight (8) feet above grade directly in line with the exhaust vent terminal for the horizontally vented gas fueled heating appliance or equipment. The sign shall read, in print size no less than one-half (1/2) inch in size, “GAS VENT DIRECTLY BELOW. KEEP CLEAR OF ALL OBSTRUCTIONS”.
4. INSPECTION. The state or local gas inspector of the side wall horizontally vented gas fueled equipment shall not approve the installation unless, upon inspection, the inspector observes carbon monoxide detectors and signage installed in accordance with the provisions of 248 CMR 5.08(2)(a)1 through 4.

EXEMPTIONS

The following equipment is exempt from 248 CMR 5.08(2)(a)1 through 4:

1. The equipment listed in Chapter 10 entitled “Equipment Not Required To Be Vented” in the most current edition of NFPA 54 as adopted by the Board; and
2. Product Approved side wall horizontally vented gas fueled equipment installed in a room or structure separate from the dwelling, building or structure used in whole or in part for residential purposes.

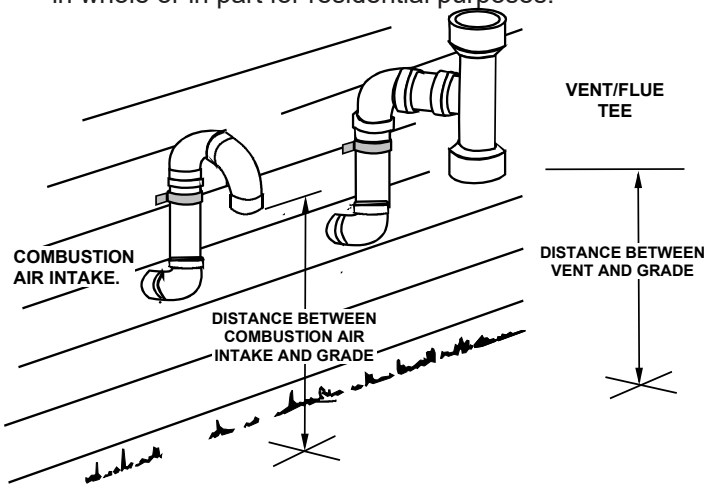

   c. MANUFACTURER REQUIREMENTS - GAS EQUIPMENT VENTING SYSTEM PROVIDED. When the manufacturer of Product Approved side wall horizontally vented gas equipment provides a venting system design or venting system components with the equipment, the instructions provided by the manufacturer for installation of the equipment and the venting system shall include:
3. Detailed instructions for the installation of the venting system design or the venting system components and;
4. A complete parts list for the venting system design or venting system.
   d. MANUFACTURER REQUIREMENTS - GAS EQUIPMENT VENTING SYSTEM NOT PROVIDED. When the manufacturer of a Product Approved side wall horizontally vented gas fueled equipment does not provide the parts for venting the flue gases, but identifies “special venting systems”, the following requirements shall be satisfied by the manufacturer:
5. The referenced “special venting system” instructions shall be included with the appliance or equipment installation instructions; and
6. The “special venting systems” shall be Product Approved by the Board, and the instructions for that system shall include a parts list and detailed installation instructions.
   e. A copy of all installation instructions for all Product Approved side wall horizontally vented gas fueled equipment, all venting instructions, all parts lists for venting instructions, and/or all venting design instructions shall remain with the appliance or equipment at the completion of the installation.

START-UP CHECKLIST

Furnace				
	Model Number			
	Serial Number			
ELECTRICAL				
Line Voltage (Measure **L1 to N** and **N to Ground** Voltage)	L - N			
	N - G			
Secondary Voltage (Measure Transformer Output Voltage)	R - C			
Blower Amps				
BLOWER EXTERNAL STATIC PRESSURE				
Return Air Static Pressure			IN. W.C.	
Supply Air Static Pressure			IN. W.C.	
Total External Static Pressure (Ignoring +/- from the reading above, add total here)			IN. W.C.	
TEMPERATURES				
Return Air Temperature (Dry bulb / Wet bulb)			DB °F	WB °F
Cooling Supply Air Temperature (Dry bulb / Wet bulb)			DB °F	WB °F
Heating Supply Air Temperature			DB °F	
Temperature Rise			DB °F	
Delta T (Difference between Supply and Return Temperatures)			DB °F	
GAS PRESSURES				
Gas Inlet Pressure			IN. W.C.	
Gas Manifold Pressure (Low Fire)			IN. W.C.	
Gas Manifold Pressure (High Fire)			IN. W.C.	
Gas Type (NG) = Natural Gas / (LP) = Liquid Propane				
Additional Checks				
Check wire routings for any rubbing				
Check for kinked pressure switch tubing.				
Check flue elbow for alignment and clamp tightness.				
Check screw tightness on blower wheel.				
Check factory wiring and wire connections.				
Check product for proper clearances as noted by installation instructions				
Check R-32 sensor wire is connected properly (if applicable)				
°F to °C formula: (°F - 32) divided by 1.8 = °C **°C to °F formula: (°C multiplied by 1.8) + 32 = °F**				

THIS PAGE LEFT INTENTIONALLY BLANK.

THIS PAGE LEFT INTENTIONALLY BLANK.

THIS PAGE LEFT INTENTIONALLY BLANK.

CUSTOMER FEEDBACK

We are very interested in all product comments.
Please fill out the feedback form on one of the following links:
Goodman® Brand Products: (http://www.goodmanmfg.com/about/contact-us).
Amana® Brand Products: (http://www.amana-hac.com/about-us/contact-us).
You can also scan the QR code on the right for the product brand you purchased to be directed to the feedback page.

GOODMAN® BRAND

AMANA® BRAND

PRODUCT REGISTRATION

Thank you for your recent purchase. Though not required to get the protection of the standard warranty, registering your product is a relatively short process, and entitles you to additional warranty protection, except that failure by California and Quebec residents to register their product does not diminish their warranty rights. The duration of warranty coverages in Texas and Florida differs in some cases.

For Product Registration, please register as follows:
Goodman® Brand products: (https://www.goodmanmfg.com/product-registration).
Amana® Brand products: (http://www.amana-hac.com/product-registration).
You can also scan the QR code on the right for the product brand you purchased to be directed to the Product Registration page.

GOODMAN® BRAND

AMANA® BRAND

19001 Kermier Rd. Waller, TX 77484
www.goodmanmfg.com • www.amana-hac.com
© 2023 Daikin Comfort Technologies Manufacturing, L.P.
Amana is a registered trademark of Maytag Corporation or its related companies and is used under license. All rights reserved.