Hisense

life reimagined

USER'S OPERATION MANUAL

Before operating this unit, please read this manual thoroughly, and retain for future reference.

HWF8I1015B

EN

English

Thank you very much for choosing our product.

- Please install and operate this product correctly. Do not use it for any laundry labelled as not suitable for machine washing.
- The pictures shown in the manual are for illustrative purposes only. Appearance, printing and other details are subject to actual product.
- We prioritize technological innovation. To improve its overall performance, the appliance is subject to technical changes without notice.
- This product is intended solely for household use.

The following symbols used in this manual are defined below:

Information, advice, tip, or recommendation

WARNING - General Danger

WARNING - Danger of Electric Shock

WARNING - Danger of Hot Surface

WARNING - Danger of Fire

Please read this manual thoroughly.

CONTENTS

4 SAFETY PRECAUTIONS

10 PRODUCT DESCRIPTION
11 Specifications

12 INSTALLATION AND CONNECTION
12 Packing / packaging
14 Removing the transport screws/rods
15 Installation location
15 Adjustable feet
15 Installation clearance Connecting to water supply
16 Connecting and securing the water discharge hose
19 Connecting to power mains
20
21 Transport after installation

22 FIRST TIME USE

27 PROGRAMME AND FUNCTIONS
28 Programme table
30 Additional settings and functions
37 Start the program
37 End of the program

38 INTERRUPTIONS AND CHANGING THE PROGRAMME

40 MAINTENANCE AND CLEANING
40 Cleaning the detergent drawer
41 Cleaning the water supply hose, detergent dispenser housing, and rubber door gasket
42 Cleaning the pump filter
43 Cleaning the inlet filter
43 Cleaning the exterior

44 TROUBLESHOOTING
47 FAULT CODES AND TROUBLESHOOTING
48 SERVICING

48 USAGE RECOMMENDATIONS
49 STAIN REMOVAL TIPS
51 DISPOSAL

INTRODUCTION

PREPARATION BEFORE FIRST USE

WASHING STEPS

CLEANING AND MAINTENANCE

TROUBLESHOOTING

MISCELLANEOUS

SAFETY PRECAUTIONS

Please read this manual carefully before operating the appliance.

Do not operate the appliance without understanding or reading this manual.

This manual applies to multiple models. Therefore, it may include features not applicable to your model.

Failure to follow the instructions or improper operation may cause damage to laundry or equipment, or result in personal injury. Please keep the manual near the appliance for easy access.

This appliance is intended to be used in household. If the appliance is used for professional, for-profit purpose or purpose exceeding normal use in a household, or if the appliance is used by a person who is not a consumer, the warranty period shall be equal to the shortest warranty period required by relevant legislation.

This appliance is not intended for use by persons (including children) with reduced physical, sensory or mental capabilities, or lack of experience and knowledge, unless they have been given supervision or instruction concerning use of the appliance by a person responsible for their safety.

Children should be supervised to ensure that they do not play with the appliance.

Children of less than 3 years should be kept away unless continuously supervised.

This appliance can be used by children aged from 8 years and above and persons with reduced physical, sensory or mental capabilities or lack of experience and knowledge if they have been given supervision or instruction concerning use ofthe appliance in a safe way and understand the hazards involved.

Children shall not play with the appliance. Cleaning and user maintenance shall not be made by children without supervision.

The maximum capacity in some cycles for dry clothes to be used is
Wash（1 0kg）.
The recommended maximum capacity for each programme may vary. For optimal results, see "PROGRAMME TABLE".

To connect the appliance to water supply, make sure to use the supplied water supply hose and gaskets. Water pressure has to be between 0.1-1 MPa (1-10 bar; 1-10 kp/cm²;10-100 N/cm²).

Always use a new water supply hose to connect the appliance to water supply, do not reuse an old water supply hose.

For appliances with ventilation openings in the base, the ventilation openings must not be obstructed by a carpet.

If the supply cord is damaged, it must be replaced by the manufacturer, its service agent or similarly qualified persons in order to avoid a hazard.

ELECTRICAL SAFETY

This appliance complies with relevant safety standards.

Before connecting the washer dryer to the power mains, wait for at least 2 hours until it reaches room temperature.

This appliance must be repaired by an authorised service center, using only spare parts approved by authorised manufacturers. Any repairs or maintenance related to safety or performance should be conducted by trained professionals.

Do not attempt to repair the appliance by yourself. Repairs performed by unqualified personnel may result in personal injury or more serious error. Please consult your local service center and always insist on genuine spare parts.

Do not attempt to operate the appliance if it is damaged, defective, partially disassembled, or has missing or damaged parts, including damaged wires or plugs.

Do not excessively bend the power cord or place heavy objects on it.

Do not clean the inside or outside the appliance with spray water.

In case of flooding, please disconnect the power plug and contact the after-sales service center.

Models with a drying function enable automatic shutdown of the heater to prevent overheating. The heater automatically shuts off when the temperature exceeds the safety threshold and restarts when the temperature drops below the threshold.

Do not connect multiple power sockets, extension cords or dual adapters to the appliance. Do not connect the appliance to the power mains using an extension cord.

Do not connect the appliance to a power socket intended for an electric shaver or hair dryer.

Do not connect the appliance to a power socket intended for small loads.

Before connecting the appliance to the power supply , ensure that the electric voltage specified on the rating plate matches the Voltage of your socket.

The power socket must be securely grounded and the water supply must be unobstructed.

Do not connect the appliance to power mains using an external switching device such as a programme timer, or connect it to power mains that is regularly switched on and off by the power supply provider.

Exhaust air must not be discharged into a flue designed to discharge combustion gases or other fuel exhaust gases.

INSTALLATION

Before using the appliance, be sure to remove the packaging (sponge, polystyrene foam, etc.) attached to the bottom of the appliance.

Please install the appliance correctly according to the instructions and connect it to the water and electricity supply (see "INSTALLATION AND CONNECTION").

Water piping and electrical wiring should be carried out by a fully trained technician or professional.

Do not install the appliance in a location where the door opening is restricted.

Do not install the appliance where the temperature may drop below 5°C, as it parts may be damaged in case of water freezing.

Place the appliance on a solid and level floor. If installed on a high platform, the appliance must be reinforced to prevent it from tipping over.

The end of the water discharge hose should reach into a water drain line.

This appliance should not be stored or used outdoors.

Avoid lint accumulation near the appliance.

Do not install the appliance near heaters or flammable materials.

Do not install the appliance in an area where gas leaks may occur.

Ensure good ventilation to prevent the gases generated by the appliance from flowing back into the room and causing a fire.

USAGE

Remove the transport screws/rods before first use, otherwise serious damage may occur when starting the appliance (see chapter "INSTALLATION AND CONNECTION/Remove transport screws/rods"). Such damage is not covered by the warranty.

Check the appliance for damage during transportation. Never operate the appliance if it is damaged.

Use detergents suitable for the appliance and laundry care. We shall not be responsible for any damage or discoloration of gaskets and plastic parts resulting from incorrect use of bleaching or colouring agents.

Do not attempt to remove any panels or disassemble the appliance.

Do not press buttons with sharp objects such as pins, knives, or nails.

Do not touch the power plug or operate the appliance with wet hands.

This appliance is only suitable for regular washing or drying (for tumble dryer models). It cannot be used for dry cleaning.

Attempting to lift the heavy appliance may cause you to get injured. Do not attempt to lift the appliance yourself as your hands may be cut by its sharp edges.

Do not use protruding parts to move the appliance. Protruding parts on the appliance may be broken when lifting or pushing the appliance.

Do not wash laundry with large buttons or other heavy metal objects, and ensure that all pockets of the laundry are empty. To prevent odours and mildew, open the door at the end of the washing cycle to allow the drum to dry.

Do not leave metal objects in the drum for extended periods.

The door glass may be cracked by strong impacts. Handle with care.

Place laundry completely into the drum to prevent it from getting caught in the door.

Cut off the water supply and unplug the power cord when the appliance is not in use.

Do not place any animals (such as pets) into the appliance.

TRANSPORT/TRANSPORT AFTER INSTALLATION
Assemble the transport screws/rods if you need to move the installed appliance (see chapter "INSTALLATION AND CONNECTION/Moving and Transporting After Installation"). Unplug the power cord before assembling the transport screws/rods!

Turn off the tap and unplug the appliance at the end of the washing cycle. Never unplug the appliance by pulling on the power cord. Always hold the power plug firmly and pull it straight out of the socket.

⚠ Do not use detergents that contain solvents as this could lead to release of poisonous gases, damage to the appliance, and cause the risk of fire and explosion.

Do not open the washer dryer door by force while it is operating (High-temperature washing/drying).

Do not use the appliance after cleaning with industrial chemicals.

⚠ Water drained during a high-temperature washing cycle is hot. Do not touch the water to prevent burns.

Laundry contaminated with edible oils, acetone, alcohol, petrol, kerosene, detergents, turpentine, wax and wax removers should be pre-washed with hot water and plenty of detergent before placing in the drum.

Use softener or similar products according to the manufacturer's instructions.

Remove all items such as cigarette lighters or matches from pockets.

DANGER OF HOT SURFACE

At higher washing or drying temperatures, the door glass will heat up. Be careful to avoid burns. Make sure children do not play near the door glass. Do not touch the door glass during operation.

WATER OVERFLOW PROTECTION (WITH APPLIANCE SWITCHED ON)

If the water level in the appliance rises above normal level, then the excess water level protection will be activated. It will shut off the water supply and start pumping out the water. The programme is interrupted and an error is reported.

Do not wash or dry laundry made of foam rubber (latex foam), shower caps, waterproof fabrics, rubber products, or clothing or pillows containing foam rubber pads in the drum.

WARNING

If your appliance has a drying function, do not interrupt the programme until the drying cycle is complete. If you need to interrupt it for any reason, carefully remove laundry to avoid burns. Quickly remove laundry and spread it out so that the heat is dissipated.

CHILD SAFETY

Before closing the washer dryer door and running the programme, make sure there is nothing except laundry in the drum. Make sure no child climbed into the washer dryer drum and closed the door from the inside.

Do not leave the door open. Children may hang on the door or climb into the appliance, causing damage or injury.

Keep all packaging materials out of the reach of children, as they may pose a danger.

Keep detergent and softener out of reach of children.

SERVICING

Repair costs resulting from damage caused by incorrect connections, improper installation and use, or repairs made by unauthorised personnel are the responsibility of the user and are not covered by the warranty.

The warranty does not cover consumables, minor colour deviations, increased noise due to appliance age that does not affect the functionality of the appliance, and aesthetic defects on components that do not affect the functionality and safety of the appliance.

PRODUCT DESCRIPTION

FRONT

1 Control unit
2 Programme selector knob
3 Detergent drawer
4 Door
5 Pump filter cover

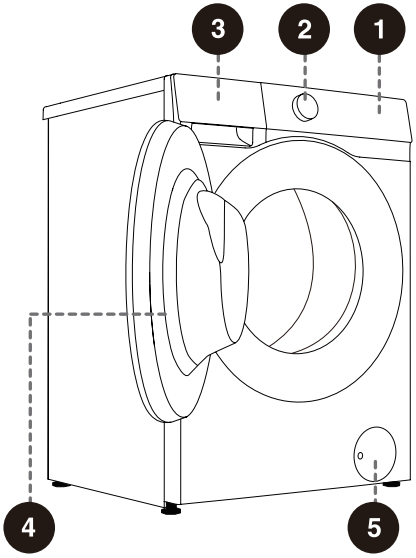

BACK

1 Water supply hose
2 Power cord
3 Water discharge hose
4 Adjustable feet
5 Transport screws/rods

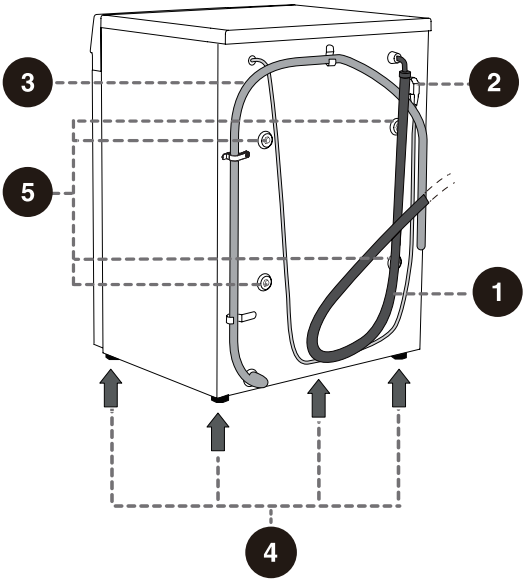

The illustrations in this manual are for illustrative purposes only. Due to product improvements and series expansion, the appearance, color, and functional components of the product you receive may differ from those shown in this manual. Please refer to the actual product.

SPECIFICATIONS

(DEPENDING ON THE MODEL)

Max. load	10 kg
Net Weight	67 kg
Rated Voltage	220-240 V~
Frequency	50 Hz
Rated Power	1950 W

DIMENSIONS (MM)

Index	Dimensions (mm)
A	595
B	845
C	515
D	550
E	580
F	1075

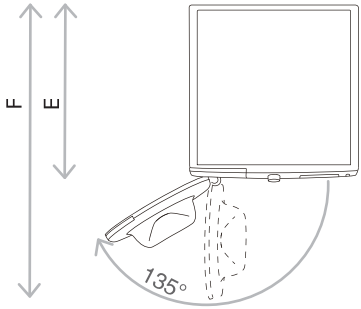

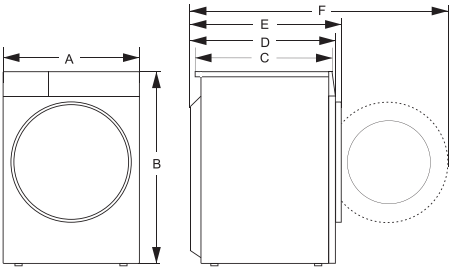

E= Washer dryer depth
F= Depth with door open

INSTALLATION AND CONNECTION

PACKING / PACKAGING

First remove all packaging and foam, especially the foam base. When removing the packaging, make sure not to damage the equipment with a sharp object. Keep the packaging materials (plastic bags, other plastic parts etc.) out of reach of children.

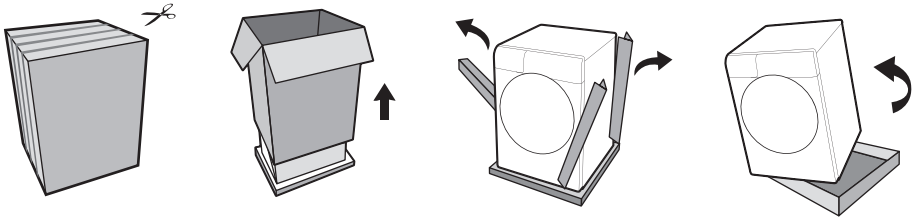

The process of packing the machine is just the opposite of unpacking above.

Check for any damage on the appliance. If you suspect the equipment is damaged, do not use it and immediately contact the service unit.

The accompanying accessories of this equipment include one or more of the following:

- User manual;
- 4 plastic plugs;
- Supply hose;
- Drain hose holder;
- Wrench;
- Noise reduction board/sponge strips/none (depending on the model).

The configuration of different models is different, and the attached accessories are subject to the actual configuration of the model.

HOW TO INSTALL THE NOISE REDUCTION BOARD:

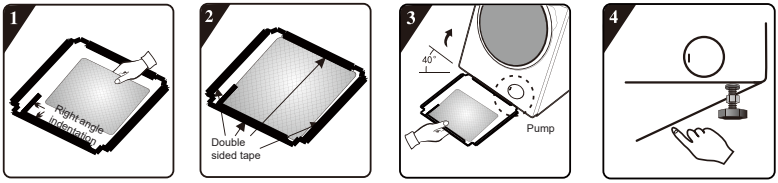

1 Before installing the noise reduction board align and paste the acoustic absorption wool with and along the right-angle impression on noise reduction board (this procedure is unnecessary for some of the models without acoustic absorption wool).

2 Remove surface paper on double sided tape at four sides of the noise reduction board.

3 Incline the appliance to an angle of 40° and let the side with right-angle notch face towards front of the washer dryer, as shown in the figure. Insert the side with oblique-angle notch between two foot screws at back of the washer dryer completely in place. Then, install the noise reduction board and ensure that it contacts with bottom of the washer dryer closely.

4 Press the double sided tape on four sides manually to secure the noise reduction board to the appliance firmly.

HOW TO INSTALL THE SPONG STRIPS:

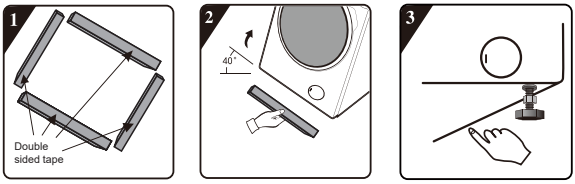

1 Remove surface paper on double sided tape on the sponge strips.

2 Incline the appliance to an angle of 40° and attach sponge strips on the bottom of the washer dryer with the two long sponge strips at the front and rear support positions, and the two short sponge strips at the left and right support positions.

3 Press down to secure the sponge strips firmly.

REMOVING THE TRANSPORT SCREWS/RODS

Disassemble the transport screws/rods once all packaging has been removed. A blocked appliance may be damaged when it is switched on for operation. Such damage is not covered by the warranty.

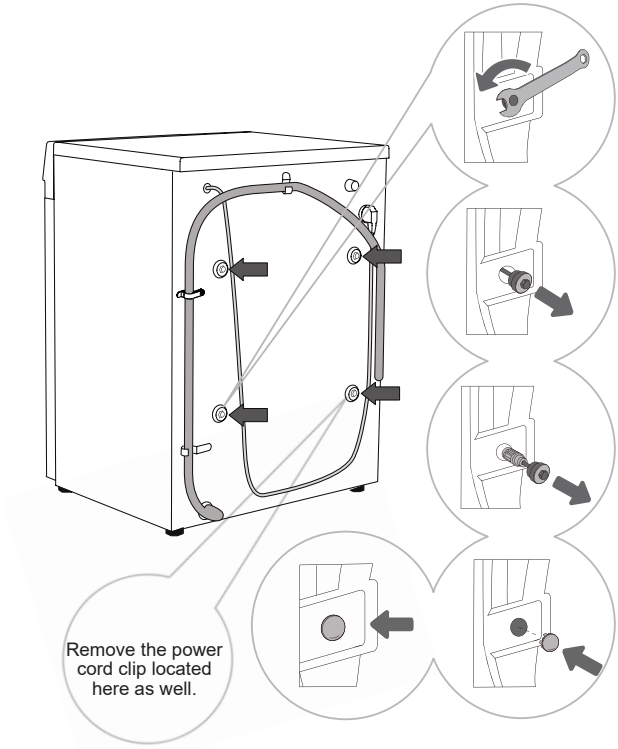

1 Move aside the water discharge hoses and use an appropriate wrench to loosen the four screws on the back in the counterclockwise direction as indicated by the arrows. Loosen the screws approximately 30 mm.

2 Pull all 4 transport screws/rods horizontally.

3 Pull out the transport screws/rods along with the rubber and the plastic parts.

4 Cover the screw holes with plastic plugs. (The plastic plugs and instructions for use are included in the accompanying spare parts.)

Save the transport screws/rods in case you have to transport the appliance again later (to reinstall the transport screws/rods, follow the above procedure in reverse order).

INSTALLATION LOCATION

Place the appliance on a solid and level floor to keep it stable. The floor should be clean and dry; otherwise, the washer dryer may slide. Also, clean the bottom surface of adjustable feet.

ADJUSTABLE FEET

Use a level gauge and a suitable wrench.

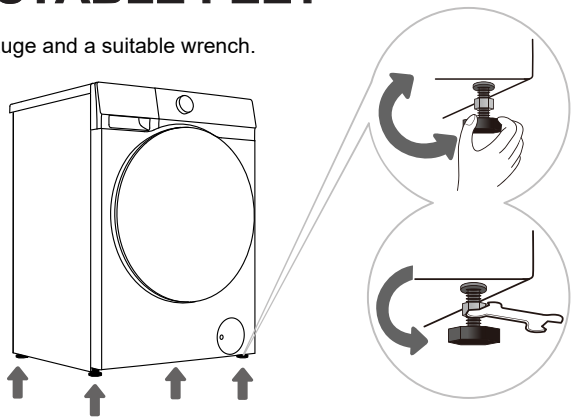

1 The level can be adjusted by rotating the adjustable foot. Adjustable foot support 2 cm horizontal adjustment.

2 After adjusting the height of the feet, use the suitable wrench to securely tighten the locknuts by turning them counterclockwise (see Figure).

Incorrect levelling of the appliance may cause vibration, appliance sliding across the room, and loud operation. Incorrect levelling of the washer dryer is not subject to warranty.

Sometimes, unusual or louder noise may appear during appliance operation. These are mostly the result of improper installation.

INSTALLATION CLEARANCE

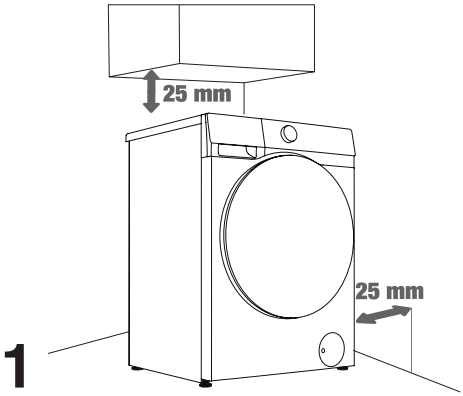

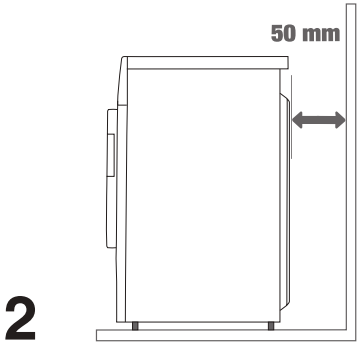

The appliance may not be in contact with a wall or adjacent furniture. For optimum washer dryer operation, we recommend observing the clearances from the walls as indicated in the figure.
In case of failure to observe the minimum required clearances, safe and correct washer dryer operation cannot be ensured. Moreover, overheating can also occur (Figures 1 and 2).

Installing the washer dryer in a confined space is not recommended.

CONNECTING TO WATER SUPPLY

The supplied water supply hose varies by model. Please choose the appropriate connection method based on the actual water supply hose.

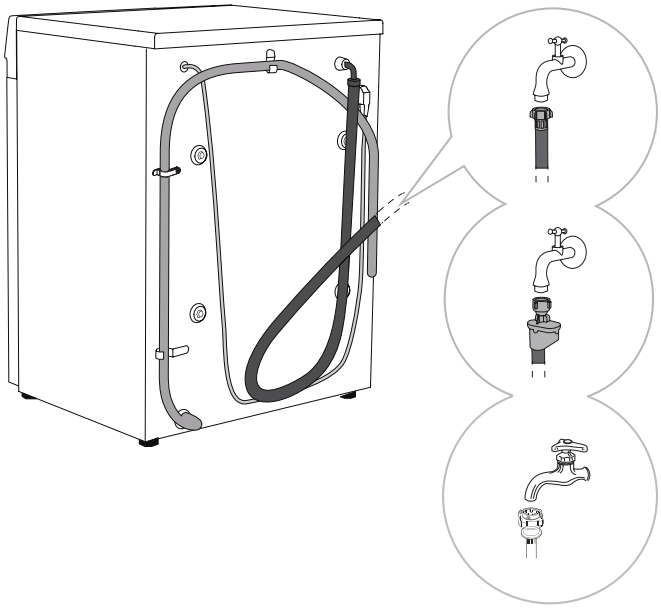

A EUROPEAN WATER SUPPLY HOSE CONNECTION

B AQUA STOP CONNECTION

C CHINESE WATER SUPPLY HOSE CONNECTION

For normal appliance operation, the pressure in the water mains should be between 0.1-1MPa (1-10 bar; 1-10 kp/cm²; 10-100 N/cm²). Minimum dynamic water pressure can be determined by measuring the water flow. In 15 seconds, 3 litres of water should flow from a fully open tap.

Only use the water supply hose supplied with the appliance. Do not use any used or other hoses.

Make sure the hose is not damaged. If the hose is degraded, brittle, or cracked, it has to be replaced.

This appliance is designed for cold water only. Do not connect it to hot water.

EUROPEAN WATER SUPPLY HOSE CONNECTION

Tighten the water supply hose by hand to ensure proper sealing (maximum torque: 2 Nm). Check the sealing for leaks.
Do not use pliers or similar tools as they may damage the nut threads.

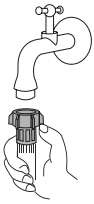

AQUASTOP CONNECTION

If an internal tube or hose is damaged, a shut-off system is activated that cuts the water supply to the appliance. In such case, the control glass (a) will turn red. Replace the water supply hose.

Do not dip the water supply hose with the AquaStop system in water as it contains an electric valve.

The water supply hose can be connected without a non-return valve.

CHINESE WATER SUPPLY HOSE CONNECTION

1. Select a suitable tap with a tip length greater than 10 mm. The outlet end must be flat. If it is uneven, smooth it out with a file to prevent leakage after installation (see Figure 1).
2. Push the slider down to disconnect the water supply hose connector from the inlet assembly (see Figure 2).
3. Loosen the four screws on the water supply hose connector, then attach the hose to the tap. If the tap diameter is too large for the connector, loosen the screws and remove the sleeve (see Figure 3).
4. Evenly tighten the four screws on the water supply hose connector and secure the nuts (see Figure 4).
5. If the appliance is to be used once or several times in a week, push the slider down without disconnecting the water supply hose connector to avoid damaging the fixing screws.

NOTE: The exposed thread length before tightening the nut is approximately 4 mm and less than 2 mm after tightening (Figure 4).

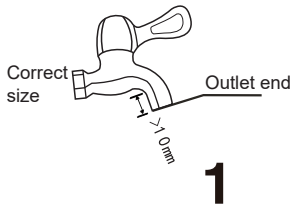

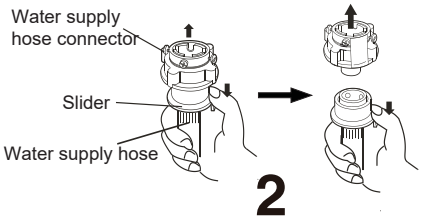

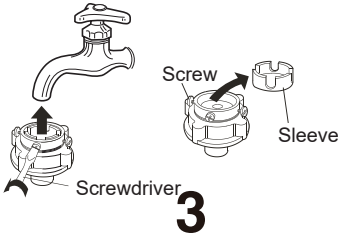

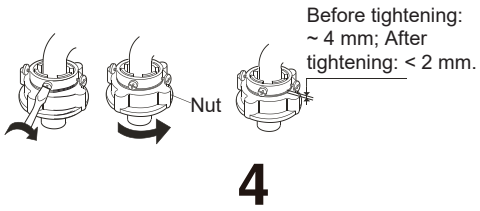

CHECKING THE CONNECTION BETWEEN THE WATER SUPPLY HOSE AND THE TAP

1. Gently pull the water supply hose to check if the connection is secure.
2. Open the tap to check for leaks.
3. The water supply hose should not be twisted or bent.
4. Check the water supply hose before each use to prevent incorrect connection.

CONNECTING THE WATER SUPPLY HOSE TO THE APPLIANCE

Connect the water supply hose nut to the water supply hose connector of the appliance. Tighten the nut and shake it gently to check that it is firmly secured, as shown in the right figure.

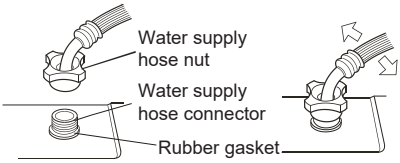

NOTE:
1. Tighten the nut evenly. Avoid rotating the water supply hose, as this may cause damage.
2. Do not remove the rubber gasket. Before each use, check that the gasket is not detached or damaged. If damaged, please contact after-sales service immediately.

CONNECTING AND SECURING THE WATER DISCHARGE HOSE

Feed the water discharge hose into a washbasin or a bathtub, or connect it directly to a drain (discharge hose minimum diameter 4 cm). The vertical distance from the floor to the end of the discharge hose may be 70 to 100 cm. It can be attached in three ways (A, B, C).

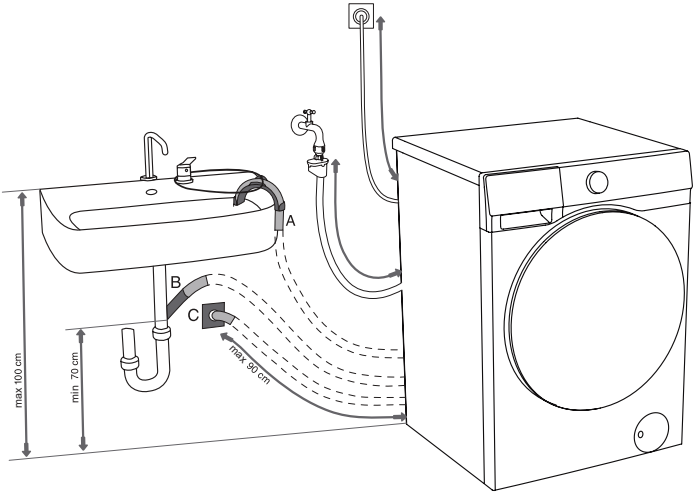

A The discharge hose end may be placed over a sink or a bathtub. Use a string fed through the opening in the elbow support to attach the hose and prevent it from slipping to the floor.

B The discharge hose may also be attached directly to the sink drain. A sink that is too small is not acceptable. Be careful as the drained water may be hot.

C The discharge hose can also be attached to a wall drain with a trap. Such trap should be properly installed to allow cleaning.

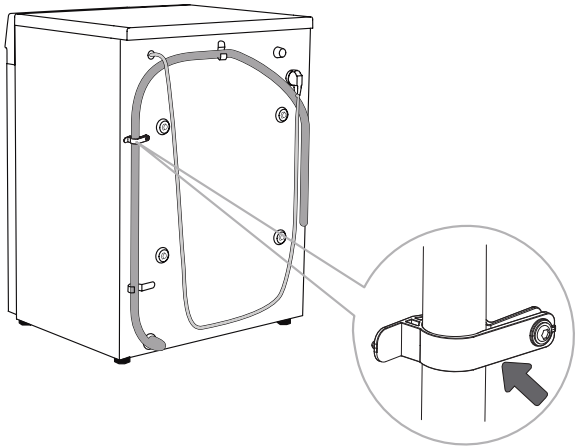

D The discharge hose has to be attached to the clips on the back of the appliance, as shown in the figure.

⚠ These clips must not be removed as this may prevent normal washing.

Make sure the drain hose is not damaged.

If the discharge hose is not correctly attached, safe and correct appliance operation cannot be ensured.

CONNECTING TO POWER MAINS

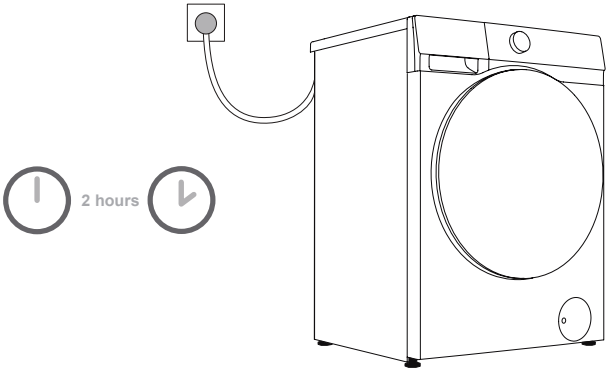

Before connecting the appliance to the power mains, wait for at least 2 hours until it reaches room temperature.
Connect the appliance to a grounded power socket. After installation, the socket should be freely accessible. The socket should be provided with grounding protection. Information on your appliance is indicated on the rating plate.

We recommend using over-voltage protection to protect the appliance in case of a lightning strike.

The appliance may not be connected to the power mains using an extension cord.

Do not connect the appliance to a power socket intended for small loads.

Do not plug or unplug the appliance when your hands are wet.

Any repair and maintenance of the appliance should be performed by trained experts.

A damaged power cord may only be replaced by a person authorized by the manufacturer.

TRANSPORT AFTER INSTALLATION

If it needs to transport properly installed equipment, please first unplug the power plug, turn off the faucet, remove the water inlet and drain pipes, and ensure that the detergent box and the machine door are closed in place.

Be sure to reinstall the transport bolts to avoid damage to the equipment by vibration during transport (see “Installing and connection / demolishing the transport screws/rods”). If you lost the transport screws/rods, they can be ordered from the manufacturer.

Pack all packaging materials properly (plastic bags, other plastic parts etc.).

The equipment is heavy, please carry it by at least two persons. When handling, please do not grasp the protruding parts, such as the door, the top cover, etc., so as not to fall off or damage the parts.

After transport, the equipment should be left to stand still for at least 2 hours before it is connected to the power. The equipment should be installed and connected by a trained technician.

Please read the instructions carefully before connecting the device again. Damage caused by improper connection or improper use is not covered by the warranty.

Transport and Handling Method

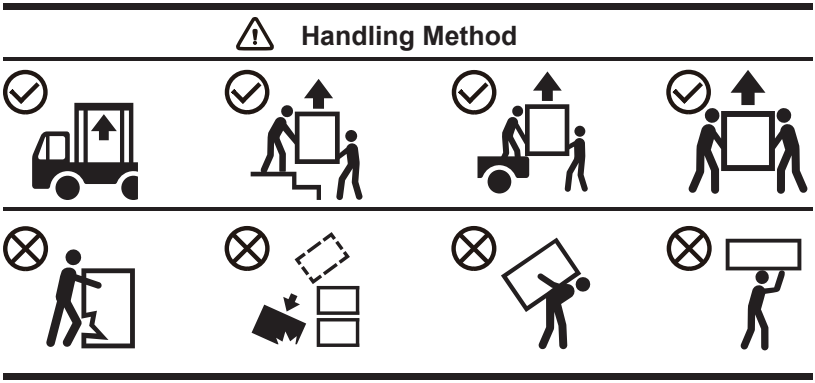

BEFORE USING THE APPLIANCE FOR THE FIRST TIME

FIRST USE

This appliance has been tested at the factory and may contain a small amount of water residue. It is recommended to run a “Drum Clean” (or other high-temperature) program to remove any residual water from the drum.

● Connect the appliance to the power mains and open the water tap. There should not be any laundry in the drum. Select and start the program.

⚠ Do not use any solvents or cleaning agents that could damage the appliance (please observe the recommendations and warnings provided by the cleaning agent manufacturers).

HEED THE LABELS ON THE LAUNDRY

Washing	Max. washing temp. 95°C (95 95)	Max. washing temp. 60°C (60 60)	Max. washing temp. 40°C (40 40)	Max. washing temp. 30°C (30 30)	Hand wash only	Do not wash
Bleaching	Bleaching in cool water (c1)			Bleaching not allowed		
Dry cleaning	Dry cleaning with all agents (A)	Petroleum solvent R11, R113 (P)		Dry cleaning in kerosene, pure alcohol, and R113 (F)	Dry cleaning not allowed	
Ironing	Hot ironing, max. 200°C	Hot ironing, max. 150°C		Hot ironing, max. 110°C	Ironing not allowed	
Drying	Dry flat (place on a flat surface)	Drip dry Line dry		High temperature Low temperature	Do not tumble dry	

PREPARING THE WASHING PROCESS

1. Sort the laundry by type of fabric (cotton, blends, silk, wool, etc.), care label instructions, colour (white, coloured), and soiling.
2. Empty pockets; remove metal items that may damage the laundry or appliance; fasten buttons and turn clothing with buttons or embroidery inside out; close all zippers; tie strings on clothing with drawstrings.
3. Place sensitive clothes and small or lightweight items in a special-purpose laundry washing bag and wash them together with other laundry.
4. Turn items prone to pilling or long-pile fabrics inside out before washing.
5. Stains that are left for too long can be difficult to remove. Treat soiled areas such as cuffs and collars before washing (see chapter "Stain Removal Tips").
6. Do not wash heavy comforters, plush toys, or items in laundry washing bags separately in the drum to avoid imbalance alarms.

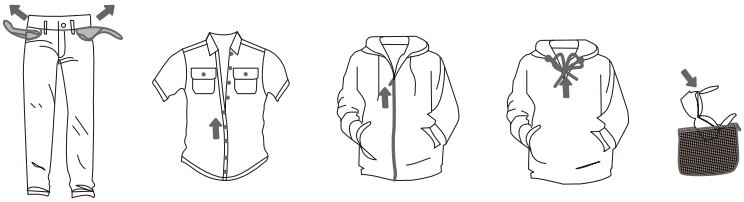

NON-WASHABLE AND NON-DRYABLE LAUNDRY

Leather and fur products (risk of deformation)	Rayon and its blended products (risk of discolouration or deformation)	Large thick rubber cushions (risk of damage or malfunction)
Hats with hard materials (risk of appliance damage and malfunction)	Cushions, pillows, articles with cotton wadding, foam and other sponge materials, carpet covers (risk of damage or malfunction)	Others: Wrinkled or embossed clothes; coated down jackets; crepe fabrics; easily deformed clothes (suits, jackets, ties, dresses, etc.); easily fluffing clothes (velvet, cotton flannel).

NON-DRYABLE LAUNDRY (FOR TUMBLE DRYER MODELS)

Any laundry marked by graphic (risk of laundry damage)	Wool clothes (risk of shrinkage or fur loss)	Tights and stockings (risk of damage or deformation)	Sizing clothes
Cushions or clothes with furs (risk of damage or malfunction)	Comforters (risk of damage or malfunction)	Clothes with lace or embroidery, and new synthetic fibers (very fine fibers) (risk of deformation)	Silk

Non-washable and non-dryable laundry includes but is not limited to the above items.

Wet items that are still dripping are not suitable for tumble drying and may trigger an alarm.

ADDING DETERGENT/SOFTENER

DETERGENT DRAWER

1. The automatic delivery model has the function of automatic delivery of detergent / softener, and can automatically add an appropriate amount of detergent / softener. When used for the first time, the system defaults to the automatic delivery function of detergent and softener.

2. When the automatic release function is selected, the device will automatically release the detergent / softener, and the user can adjust the automatic release position according to the consumption demand. The device remembers the drop gear setting from the last time the laundry was done.

3. If you do not want to use the automatic delivery function, you can turn it off in the settings and manually add detergent and softener when washing clothes.

4. “Dispenser 2” can add softeners/detergents, please be sure to add them according to the function settings. Users can choose the same/different detergent for “Dispenser 1” according to their needs, please refer to the “Dispenser 2” for specific settings.

5. If the amount in the detergent/softener box is insufficient, the detergent/softener shortage warning icon in the display screen lights up red or flashes, please add detergent/softener in time. The “Dispenser 1” has

a maximum reserve of 0.65L and the “Dispenser 2” has a maximum reserve of 0.4L.

Do not exceed the MAX line. Please close the detergent box drawer completely after adding.

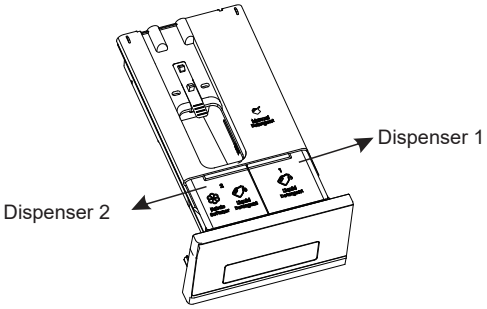

	Detergent drawer Manual
	Detergent Dispenser Compartment
1	Liquid Detergent Dispenser Compartment
2	Fabric Softener/ Liquid Dispenser Compartment

PRECAUTIONS FOR USE

1. Always use a high-efficiency, neutral, low-foaming detergent suitable for this appliance. Do not use caked powdered detergent.

2. When using the automatic dispensing function, do not manually add detergent.

3. Please do not overfill the detergent / softener box to prevent the detergent / softener from overflowing. After filling the detergent / softener, make sure that the detergent box drawer is fully closed before starting the washing procedure

4. Before installing, moving, handling or adjusting the equipment, remove or secure the detergent box to prevent the detergent and softener from overflowing.

5. Corrosive descaling agents may damage the appliance. Do not use solvents. Do not wash the laundry that was cleaned with solvents or flammable substances.

6. If manual delivery is required, the automatic delivery function can be turned off, and the detergent can be manually added:

6.1 The amount of detergent depends on the type, soil level, laundry colour, and washing temperature, please add the appropriate amount.

6.2. Excessive amount of detergent may result in foaming that in turn impairs washing efficiency. If excessive foam is detected, the appliance may pause the programme for defoaming.

6.3 Using insufficient detergent may result in poor washing effect and could lead to scale buildup in the drum and water pipes.

6.4 We recommend adding powder detergent manually right before the wash cycle starts. If added in advance, ensure the detergent dispenser compartment is completely dry; otherwise, the powder detergent may harden and clump before the wash cycle starts.

7. Do not use concentrated or strongly concentrated detergents or softeners (maximum allowable viscosity is 800mpa.s). It can only be used after dilution with water.

8. Do not put powdered detergent into the automatic detergent box.

9. In order to prevent that detergent / softener in the detergent box from dry, do not open the lid of the detergent box for a long time. Only pull out the drop box when filling or changing detergent.

10. Keep detergent and softener out of reach of children.

11. The detergent drop box does not have a special dispenser compartment for the addition of disinfectants, and it is not recommended to put disinfectants.

LOADING THE APPLICANCE

Open the appliance door, and insert the laundry loosely into the drum after making sure the drum is empty.
Close the appliance door. The door is closed when you here a click.

Do not overload the drum! For maximum load, see "PROGRAMME TABLE". If the appliance drum is too full, the laundry will not be washed as thoroughly.

Ensure the laundry is completely placed into the drum to prevent it from getting caught in the door.

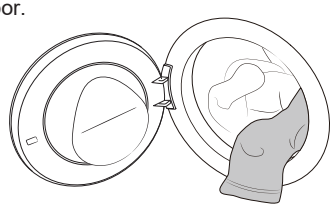

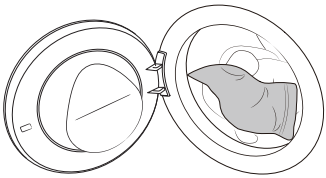

FIRST TIME USE

Tap "⏻" to power on and enter the startup navigation.

Configure Language and WLAN according to the startup navigation and actual needs of the user, and complete the Operating tips.

Language

Set the language, the default is English, turn the main knob to select, and then tap "◯" to confirm the selection and go to the next step.

WLAN

The appliance is bound to the network, and the WLAN connection of the appliance is completed according to the prompts.
If you do not need to connect to the network, press and hold "◯" to skip.

Operating tips

Interface operation guide, tap "◯" continuously to switch the operation guide interface, and enter the main interface after completion.

PROGRAMS AND FUNCTIONS

Main interface

This machine adopts the control method of touching the function keys + rotating the main knob. The Power, Start/Pause, Back, Options, Confirmation button and other function buttons are operated by touching the buttons; the program selection is operated by rotating the main knob; additional functions and other settings are operated by rotating the main knob + touching the function buttons.

The final display is subject to the actual situation.

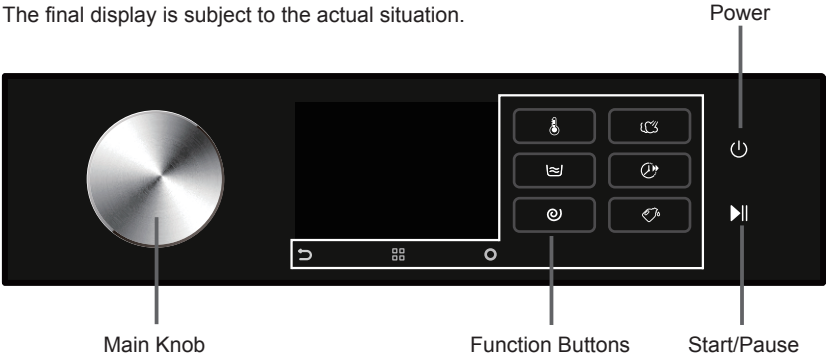

Icon description

Icon	Name	Description
	Power	Used to turn on/off the appliance.
	Start/Pause	Used to start/pause a program.
	Back	Tap to return to the previous interface; long press to return to the main interface.
	Options	Tap to enter the selection of additional functions; long press to enter the system function settings.
	Confirm	Used to confirm the current selection.
	WLAN	This icon is displayed when the appliance is connected to the network.
	Remote Control	This icon is displayed when the Remote Control function is turned on.
	Door Lock	This icon is displayed when the door is locked.

PROGRAMME TABLE

Tap the power button to turn on the machine. According to the type of material and the degree of soiling, turn the main knob left/right to select the appropriate program. During operation, the main knob will not rotate automatically.

Program	Maximum load (kg)	Maximum speed (rpm)	Programme description
Cotton (Cold, 20℃, 30℃, 40℃, 60℃, 90℃)	10	1500	It is suitable for washing moderately or heavily soiled cotton or lien fabrics.
Synthetics (Cold, 20℃, 30℃, 40℃, 60℃)	5	1500	It is suitable for washing moderately soiled synthetic fibers or cotton fabrics.
Auto (Cold, 20℃, 30℃, 40℃)	6	1500	It can automatically adjust the main washing time and rinse times according to the weight of the laundry, and is suitable for washing lightly dirty laundry.
Refresh (40℃, 60℃)	1	/	It is used for sterilization, wrinkle removal, and odor removal of a small amount of dry clothes. It requires turning on the faucet, and detergent/ softener cannot be added.
Baby Care (40℃, 60℃, 90℃)	2	1500	It is suitable for baby clothes and underwear, etc., sterilised and disinfected through high temperature steam. Softener is not recommended for this programme.
Allergy Care (60℃)	2	1500	It is suitable for washing clothes that are resistant to high temperatures and not easy to fade, and removes allergens such as pollen, mites, and parasites through high temperatures.
Pets (Cold, 20℃, 30℃, 40℃, 60℃)	4	1500	It is suitable for washing clothes with pet hair.
Full load 49' (Cold, 20℃, 30℃, 40℃)	10	1500	It is suitable for washing daily clothes such as cotton, synthetic fibers or blended fabrics in a short period of time.
Power 30' (Cold, 20℃, 30℃, 40℃)	5	1500	It is suitable for washing a small amount of heavily soiled laundry, with an intensive wash cycle in a short period of time.
Quick 15' (Cold, 20℃, 30℃, 40℃)	2	800	It is suitable for washing a small amount of laundry or lightly soiled laundry. If you change the default setting, the washing time will be longer.
Bedding (Cold, 20℃, 30℃, 40℃, 60℃)	4	1500	It is suitable for washing large-sized clothes, such as curtains, sheets, quilt covers, etc.
Wool (Cold, 20℃, 30℃, 40℃)	2	600	It is suitable for washing machine washable woolen clothes (refer to the laundry label requirements).
Sportswear (Cold, 20℃, 30℃, 40℃)	4	1000	It is suitable for washing athletic and leisure wear made from microfiber fabrics.

Program	Maximum load (kg)	Maximum speed (rpm)	Programme description
Down (Cold, 20℃, 30℃, 40℃)	2	600	It is suitable for washing machine washable items filled with synthetic fibers, such as pillows, mattresses and bedspreads, and also for washing items filled with down.
Rinse+Spin –	10	1500	It is suitable for rinsing and spinning laundry separately. Do not add detergent for this programme.
Drum Clean (90℃)	/	800	It is used to clean the drum and remove any residues of detergent and bacteria that can accumulate and develop, especially when using low temperature programmes. Do not add detergent or softener for this programme.
Spin –	10	1500	It is suitable for spinning laundry separately. It is suitable for spinning laundry separately. Do not add detergent or softener for this program.

Australian Performance Testing Programmes:
The program Cotton+40℃ + 3 rinses+1500 rpm+cancel 'automatic dispensing'+intensive is recommended for a normally soiled load of 10 kg

NOTE
(1) Water Temperature: Select the appropriate water temperature for chosen washing program. Always follow garment manufacturer's care label or instructions when washing to avoid damage to clothes.
(2) Actual water temperature may differ from the declared cycle temperature.
(3) The test results depend on water pressure, water hardness, water inlet temperature, room temperature, laundry type and amount of load, degree of soling, utilized detergent, fluctuations in the power supply and chosen additional options.
(4) Overloading the laundry during the washing cycle may reduce washing efficiency, as the appliance initially detects a lower weight and uses less water. Insufficient water may also cause damage to the laundry and extend the washing time.
(5) Drum Clean (if available): Make sure the drum is empty before using the Drum Clean programme. It is recommended to run it at least once a month.
(6) When descaling, only use descaling agents with added anti-corrosion protection. (Only use non-corrosive descaling agents. Follow the manufacturer's instructions.) Finish the descaling process by running “Drum Clean” (or other high-temperature) programmes several times in order to remove any residual descaling agent. It is recommended to descale at least once every six months.

The maximum or nominal load applies to laundry prepared pursuant to the IEC 60456 standard.

For better washing effect, we recommend loading the drum to 2/3 when using the cotton programmes.

ADDITIONAL SETTINGS AND FUNCTIONS

After starting up, the display will show the default program and parameters. If you use the default parameters, tap the "**Start**/Pause" button to start the program. Users can select appropriate programs and parameters and add additional functions as needed. After tapping the "**Start**/Pause" button to start, some of the set functions cannot be changed. If you need to change the settings, press and hold the "Power" button to shut down, and restart to reselect the program and function.

■ Before starting the program, select the program using the main knob, and tap the function button to set the Temp., Rinse, Spin, Steam, Quicker, and Auto Dose functions. Different programs have different optional additional functions and gear selection ranges.

Power

Used to turn on/off the appliance.
If you need to shut down the program during operation, press and hold the "Power" button to shut down. When the program is running, if no operation is performed for a period of time, the appliance will automatically turn off the screen and enter the energy-saving state. Turn the main knob or tap any button to wake up the screen. In the standby state or after the programme ends, if no operation is performed for a period of time, the appliance will automatically turn off the screen. The appliance will automatically shut down if no operations are performed for a period of time. In the alarm state, the appliance will not turn off the screen

Start/Pause

Start/pause the program.

If the door is not closed or locked, an alarm will be displayed on the screen after pressing "Start"

Temp.

Used to select the washing temperature before starting the program.

Tap this option to set the wash temperature before starting the program. Tap continuously to cycle through the setting gears. The temperature can be selected in gears: Cold/20/30/40/60/90°C. The heating temperature that can be set for each program is different.

Rinse

This function changes the default number of rinse cycles.

Before starting the program, tap this option to set the number of rinses. Tap continuously to cycle through the set gears. The number of rinses can be selected: 1/2/3/4/5 times. The number of rinses that can be set for each program is different.

Spin

This function allows you to adjust the spin speed of the program.

Before starting the program, tap this option to set the program speed. Tap continuously to cycle through the set gears. The speed options are: 0/400/600/800/1000/1200/1500rpm. The speed range that can be set for each program is different. Select "0rpm" and the appliance will not spin, but only drain water.

Steam

This function can generate steam, reduce or eliminate wrinkles, make clothes more comfortable.

Before starting the program, tap this option to turn on the Steam function.

Quicker

This function can reduce the washing time of the program and speed up the washing process.
Before starting the program, tap this option to shorten the program time. Tap again to cycle through the gear settings in Quicker.
Cotton, Synthetics, Baby Care can choose two gears, some program gears are not selected. Different gear settings correspond to different program maximum load.
For programs with automatic weighing, selecting this function will disable automatic weighing, and deselecting this function will enable automatic weighing again.

Auto Dose

It turned on the Detergent/Softener's intelligent delivery function by default.
Tap this option to turn on / off the function. Turn this function off if you need to add it manually. After closing, you need to manually pour the Detergent required for a single wash into the "Manual Detergent" dispenser compartment of the detergent box.
Long press and hold to enter the gear setting page, adjust the Detergent/Softener input, according to the demand in the Off/Less/Standard/More cycle selection. The default gear is Standard. Select the Off gear to turn off the corresponding Detergent / Softener intelligent delivery. If Detergent/Softener is insufficient, the warning prompt corresponding to the icon will appear on the display screen, please open the detergent box and add Detergent/Softener accordingly.
During the program operation, please keep the detergent box closed.

Additional Functions

■ Tap "" to enter the additional function settings interface:
Before starting the program, the users can set additional functions such as Remote Control, Child Lock, Mute, Delay End, Anti Crease, Cold Wash, PreWash, Intensive, Stain Removal, etc. as needed. Turn the main knob to select additional functions, tap "" to confirm the selection, and tap it again to cancel the selection. The corresponding icon is lit to indicate that this function is enabled. Different programs have different additional functions that can be selected.

Remote Control

This function can activate/deactivate the remote control module of the appliance.
Turn the main knob to select this function, tap "" and the "" icon lights up, and the Remote Control function is turned on. The same operation can be used to turn off Remote Control.
Before activating the Remote Control function, check to make sure that the WLAN function is turned on and connected normally, and the door is properly closed.
When the WLAN function is turned on and connected normally, but the "" icon on the screen is not lit, you can view the status or set the program parameters and function items (depending on the different permissions of the model) through your mobile phone, but you cannot start the program remotely.
When the WLAN function is turned on and connected normally, and the "" icon on the screen is on, you can set the program parameters and function items through your mobile phone, and you can start the program remotely.
After turning on the Remote Control mode, if there is no operation on the entire machine and the App for a period of time, it will enter the Energy Saving mode, and it will automatically shut down if there is no operation within 7 days.

Child Lock

To prevent children from operating the machine by mistake and external interference with the washing program, this machine has a Child Lock function.
Turn the main knob to select this function, tap "", the "" icon lights up, and the Child Lock function is turned on. The same operation can be used to release Child Lock.
After the program ends, the Child Lock function will be automatically canceled.

Mute

This function shields other sounds except the alarm sound and reduces noise.
Turn the main knob to select this function and tap " " to activate/deactivate the Mute function.

Delay End

This function allows you to schedule laundry at your convenience. Please select the program and function, and then select the function to make a reservation.
Turn the main knob to select this function, tap " " to enter the reservation time selection interface, turn the main knob to select the reservation end time, tap " ", the reservation time is lit, tap the "**Start**/Pause" button to start the reservation.
After the reservation is set, before the function is started, if the user changes the program, resets the parameters and functions (except the Anti Crease function), the reservation will be automatically canceled;
The reservation time is the end time of the program, including the entire program running time, so the reservation time must be greater than the program running time, and the maximum time cannot exceed 24 hours.

Before starting the Delay End function, make sure the door is properly closed and the " " icon on the display is lit.

Anti Crease

This function adds an anti crease mode, which causes the inner drum to rotate intermittently after the program ends to prevent wrinkles from forming when clothes are not taken out for a long time.
After selecting the program, turn the main knob to select this function, and tap " " to turn it on/off.
After this function is turned on, the program ends and automatically enters the anti-wrinkle mode.
During the operation of the Anti Crease function, tap the Start/Pause button to end this function. If no operation is performed, the program will automatically end after a maximum of 12 hours by default.
Anti Crease cannot be set when the spin speed is selected as "0rpm".

Cold Wash

This function uses cold water to wash, and can automatically adjust the washing intensity and water level to achieve energy-saving and environmentally friendly washing effects.
Before starting the program, turn the main knob to select this function and tap " " to activate/deactivate the Cold Wash function.

PreWash

This function adds a prewash period before the main wash phase and is suitable for heavily soiled laundry.
Before starting the program, turn the main knob to select this function, and tap " " to turn on/off

Intensive

This function increases the strong washing time and increases the washing strength.
Before starting the program, turn the main knob to select this function, and tap " " to turn on/off

Stain Removal

This function is used for washing special stains.
Before starting the program, turn the main knob to select this function, and tap " " to enter the selection of different stain types. After selecting a stain, tap " " to confirm the selection, and tap it again to cancel the selection.
If the program is changed, the selected stain type will be automatically canceled.

FUNCTION TABLE

Program	Temp.	Rinse	Spin	Steam	Quicker	Auto Dose	Child Lock	Mute	Delay End	Anti Crease	Cold Wash	Prewash	Intensive	Stain Removal
Cotton	•	•	•	•	•	•	•	•	•	•	•	•	•	•
Synthetics	•	•	•	•	•	•	•	•	•	•	•	•	•	•
Auto	•	•	•	–	–	•	•	•	•	•	–	•	–	–
Refresh	•	–	–	–	–	–	•	•	•	–	–	–	–	–
Baby Care	•	•	•	•	•	•	•	•	•	•	–	•	•	–
Allergy Care	–	•	•	•	–	•	•	•	•	•	–	•	•	–
Pets	•	•	•	•	–	•	•	•	•	•	•	•	•	–
Full load 49'	•	•	•	–	–	•	•	•	•	•	–	•	–	–
Power 30'	•	•	•	–	–	•	•	•	•	•	–	•	–	–
Quick 15'	•	•	•	–	–	•	•	•	•	•	–	–	–	–
Bedding	•	•	•	–	–	•	•	•	•	•	•	•	•	–
Wool	•	•	•	–	–	•	•	•	•	–	–	–	–	–
Sportswear	•	•	•	–	–	•	•	•	•	•	•	•	•	–
Down	•	•	•	–	–	•	•	•	•	•	–	–	–	–
Rinse+Spin	–	•	•	–	–	•	•	•	•	•	–	–	–	–
Drum Clean	–	–	–	–	–	–	•	•	•	–	–	–	–	–
Spin	–	–	•	–	–	–	•	•	•	•	–	–	–	–

• Optional functions
– Non-optional functions
○ Non-cancellable built-in default functions

■ Press and hold “ ” to enter the system function settings interface:

Before starting the program, the users can select WLAN, APP and Pairing, Language, User Program, Drum Clean Reminder, Drum Light, Standard Dosage Amount, Dispenser 2, Pump Clean, System and other system function settings as needed, turn the main knob to select the function option, and tap “ ” to confirm the selection. The corresponding icon is lit to indicate that this function is enabled.

WLAN

Turn the main knob to select this option, tap “ ” to turn on/off the appliance's WLAN function, and long press “ ” to set the appliance to connect to the WLAN network.

Network configuration steps:

1. Turn on the power, long press “ ”, and turn the main knob to select “WLAN”.
2. Long press “ ” to start network configuration, and the screen displays “Connecting”.
3. Next, follow the prompts on the APP. After the connection is successful, the screen displays the network configuration success interface.
4. If it fails, you can repeat the operation from the first step.

After the device is successfully connected to the network and the network binding is completed, the device can be remotely controlled through the mobile phone app.

APP and Pairing

This function needs to be used when the “WLAN” function is turned on and the connection is normal.
Turn the main knob to select this option, and tap “ ” to enter the “User adding” and “Unpair” setting interface.

Language

Turn the main knob to select this option and tap “ ” to enter the “Language” settings interface.
After turning the main knob to select the language, tap “ ” to confirm the selection.

User Program

Users can set the program to be displayed on the home page.
Turn the main knob to select this option and tap “ ” to enter the “User Program” settings interface.
Turn the main knob to select a program, tap “ ” to cancel the selection, and tap it again to confirm the selection.
The “Cotton” and “Drum Clean” programs cannot remove the home page.

Drum Clean Reminder

This option allows you to set the drum clean reminder cycle.
Turn the main knob to select this option and tap “ ” to enter the “Drum Clean Reminder” setting field.
Turn the main knob to select the prompt period, and tap “ ” to confirm the selection.

Drum Light

This option allows you to manually turn on/off the Drum Light.
After the Drum Light is turned on, the Drum Light will automatically light up when the machine is turned on, the program is paused, the program ends, or when the program is running by rotating the main knob or touching any button.

Standard Dosage Amount

This option sets the standard dose of Dispenser 1 / Dispenser 2. Users enable this option to adjust the amount of detergent/softener as needed.
Turn the main knob to select this option, and tap “◯” to enter the setting interface of “Standard Dosage Amount”.
Turn the main knob to select Dispenser 1 / Dispenser 2, and tap “◯” to confirm.
The default dose of detergent is 50 ml (for 4-5 kg of clothing), the default dose of softener is 50 ml (for 4-5 kg of clothing), and the dose can be adjusted in a range of 10-100 ml.

Dispenser 2

This option sets the “Dispensed delivery selection”. Users can choose this dispenser compartment to put Softener/Detergent according to their needs.

Turn the main knob to select this option and tap “◯” to enter the“ “Dispenser 2” settings interface.

Turn the main knob to select Softener/Detergent, and tap “◯” to confirm. Follow operations as prompted on the screen. After the selection is complete, be sure to add according to the settings.

The “Dispenser 2” defaults to delivery Softener. If the Softener is not enough, the screen will display the warning prompt corresponding to the icon “ ”.

Please follow the screen prompts when setting the delivery of “Detergent”.

If the same detergent is selected, the default priority is to put the detergent in “Dispenser 2”, and then put the detergent in “Dispenser 1”. When both are insufficient, the screen shows “ ” shortage warning icon.

If different detergent is selected, the detergent in “Dispenser 2” will be put in by default and the icon “ ” will light up. If the detergent in this box is insufficient, the icon “ ” will give a warning prompt.

When replacing a different Softener / Detergent, please empty the dispenser compartment first, and open the "Pump Clean" function to clean the residue in the dispenser compartment before replacing, so as not to affect the washing effect.

Pump Clean

This option can clean up the residue in the dispenser compartment to ensure the best washing results.
Turn the main knob to select this option, and tap “◯” to enter the setting interface of “Pump Clean”.
Turn the main knob to select the “Dispenser 1/Dispenser 2” and tap “◯” to confirm the selection.
Open the detergent delivery box, empty the corresponding dispenser compartment and inject water. Do not inject more water than the MAX line. Please close the detergent box completely after adding. Follow the on-screen prompts to turn on “Pump Clean”.

Before turning on this function, be sure to empty the dispenser compartment, otherwise bubbles will be generated in the cylinder.

System

This option takes you to the settings interfaces such as “System Update”, “Reset”, “Demo”, “Operating Tips”, “Software Licenses”, etc.

After the “Demo” mode is turned on, the program cannot be started. To exit the “Demo” mode, press and hold “ ” to enter the system settings, turn the main knob to select “System”, tap “◯”, turn the main knob to select “Demo”, and tap “◯” to turn it off.

SMART NETWORKING

Enter the “Settings” interface on your smartphone or tablet, enable Bluetooth and wireless connections, and connect to a wireless network.

NOTE:

This appliance supports 2.4 GHz Wi-Fi.
When the Wi-Fi function is enabled, the power consumption of the appliance increases. However, the Wi-Fi power is less than 2W, so it does not affect the energy efficiency rating of the appliance.

Download

Search ConnectLife from the APP store on your smartphone or tablet (Google Play Store, Apple App Store), and down and install the APP.

NOTE:

To improve performance and experience, the APP may update without notice.

Login

You need to log in to ConnectLife with your account. If you do not have a ConnectLife account, you will need to create a new one. For details, please refer to the APP's user instructions.

NOTE:

If you already have a Google account, you can log in directly using your Google account.

Device binding

1. Open ConnectLife on your smartphone or tablet.
2. Bind your appliance in ConnectLife as follows:
   A. Click the "+" on the "Home" interface, then select "Add device" or "Scan".
   B. Choose "Washing Machine" or click "Scan QR/BAR code" or "Manual entry".
   C. Scan the "QR/BAR code" on the appliance or manually enter the device "SN". If you cannot find it, click "?" for instructions.
   D. Read the instructions and operate the appliance until it switches to "Connecting" status, then click "NEXT".
   E. The APP starts searching for the appliance. You can select the desired appliance from the search list. If not found, please check if your Bluetooth is activated. Keep Bluetooth in active mode, then click "NEXT".
   F. Select your home Wi-Fi, enter the password and click "CONNECT". The appliance starts the connecting and binding process.
   G. After successful binding, you can set the name of the appliance and the room in which it is located.
   H. The appliance can now be controlled remotely via the APP.

Unpair

1. Unpair on the appliance:
   A. Check and make sure the "WLAN" function is turned on and connected normally.
   B. Press and hold "⊞" to enter the system function settings interface.
   C. Turn the main knob to select "APP and Pairing" and tap "◯" to confirm the selection.
   D. Turn the main knob to select "Unpair" and tap "◯" to confirm the selection.
   E. Select "SURE" and tap "◯" to unpair all bindings.
2. Unpair on the smart device:
   A. Select and tap the appliance you want to unpair on the "Devices" page.
   B. Tap "Settings" to enter the settings page.
   C. Tap "Remove Device" to unpair the appliance on the ConnectLife app.

Data Delete

Press and hold "⊞" to enter the system settings. Turn the main knob to select "System" and tap "◯". Turn the main knob to select "Reset" and tap "◯". Follow the prompts displayed on the screen to reset the system. After the system reset, the data stored on the user’s device will be deleted.

START THE PROGRAM

Select the program and function parameters, and confirm that the detergent has been added to the detergent box, and tap the **Start**/Pause button to start the program.

END OF THE PROGRAM

When the program ends, the appliance will sound a prompt and the display will show the end interface. The end interface shows the power consumption, running time, water consumption and number of rinses of this program (if the drying function or Anti Crease function is added, the display interface will be different after the program ends). You can press the power button to shut down. If you do not perform any operation for a period of time, the appliance will automatically turn off the screen. If you do not perform any operation for a period of time after the screen is turned off, the appliance will automatically shut down.

After the program ends, please turn off the power of the appliance, turn off the tap, unplug the power cord from the socket, open the door and remove the laundry from the drum.

Some programs automatically detect the weight of the laundry before washing, and the program duration will be automatically adjusted.

INTERRUPTIONS AND CHANGING THE PROGRAM

INTERRUPTION THE PROGRAM

To stop or cancel the program during operation, you must switch off the appliance.

CHANGING THE PROGRAM

To change the program during operation, switch the appliance off and on again, select the desired program and extra functions, then press the "**Start**/Pause" button to start the new program.

PAUSE THE PROGRAM

The program can be paused at any time during program operation by pressing the "Start/**Pause**" button. When the program is paused/flashing for the rest of the time on the display, the program is paused. If the following conditions are met, the door lock will be automatically unlocked and the door can be opened.
1. The temperature in the drum must be lower than the set safety value;
2. The water level in the drum must be lower than the set safety value.
To resume the program, please close the door first, and then press the "**Start**/Pause" button. The washing/drying program is paused, and when it is restarted, the program will continue to run from where it was interrupted. The spin program is paused, and when it is restarted, the program will start from the beginning of the spin cycle.

ADD CLOTHES

If you need to add clothes during program operation, press the "Start/**Pause**" button, the program will be paused, and the program on the display will pause/flash for the rest of the time. If the safety conditions are met, the door lock will be automatically unlocked, and the door lock icon will go out (the "Add Clothes" icon "" will light up for some models), you can open the door to add clothes. If the door lock icon does not go out, the door opening conditions are not met and you cannot add clothes midway.

If a significant amount of extra laundry is added during washing and the water level is insufficient, the cleaning effectiveness may decrease, as the appliance calculates water intake based on the initial weight of the laundry. Insufficient water may also cause damage to the laundry due to friction, and the washing time will be extended.

FAULT

In case of a fault, the program will be interrupted.
Flashing signal lights and an acoustic signal will warn about such occurrence (see chapter FAULT CODES AND TROUBLESHOOTING), and the fault code (F: XX) will be indicated on the screen.

POWER SUPPLY FAILURE

In case of a power supply failure (power outage), the washing program is interrupted. When power supply is restored, the program is resumed from the point where it was interrupted.

If there is still water in the appliance after a power outage, do not open the door until you have manually drained the water using the pump filter.

EMERGENCY DOOR OPENING

In case of failure to open the door due to power outage or other special circumstances, the door lock lever at the pump cover can be used for emergency opening.

⚠ NOTE:

1.Do not use this function when the appliance is working normall

2.Before use, ensure that the inner drum has stopped spinning, the temperature is safe, and the water level is below the laundry inlet. If the water level exceeds the laundry inlet, drain off water through the drain hose (if fitted) or by slowly unscrewing the pump filter.

3.Operation method: Open the pump cover and use a tool to pull down the door lock lever. The door can then be opened (as shown in the figure). Return the door lock lever to its original position after opening the door.

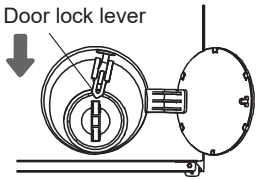

MAINTENANCE AND CLEANING

Regular maintenance can extend the service life of the appliance. Before maintenance, unplug the washer dryer from the power mains and close the water tap.

Children should not clean the appliance or perform maintenance tasks without proper supervision.

CLEANING THE DETERGENT DRAWER

Clean the detergent drawer regularly.

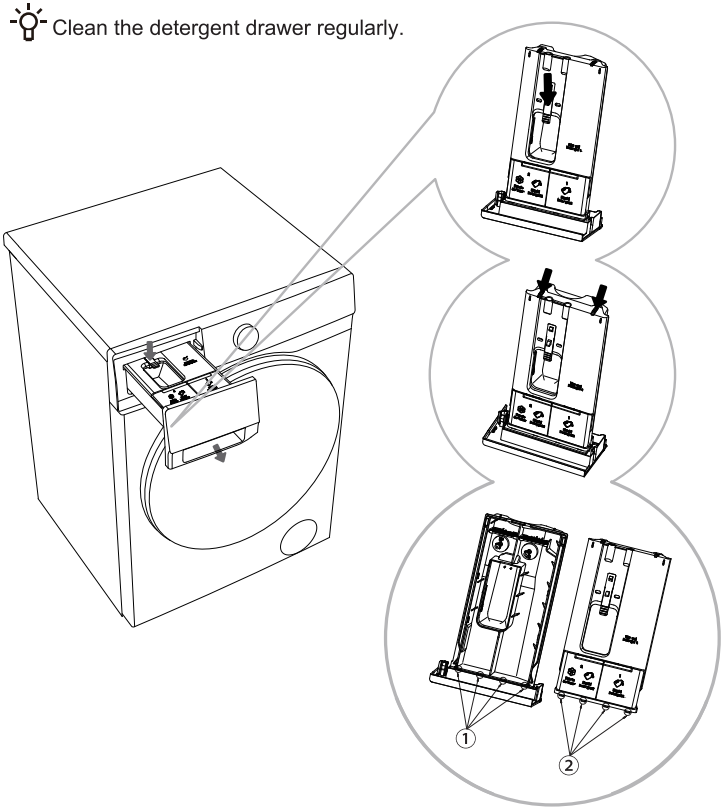

1 Pull out the detergent box. Press the small tab in the detergent box to pull out the detergent box;

2 Pull out the two flanging ribs at the positions shown in the figure, pull up and take off the box cover;

3 Empty the remaining detergent and softener in the detergent box, clean the detergent and the box cover with flowing water, and wipe dry;

4 Insert the limit rib ② of the box cover into the corresponding slot ① of the detergent box as shown in the figure, and press the box cover downward until you hear a “click”, and the flange rib at the back of the box cover is stuck. Put the detergent box back in place.

Please push the self-dispensing detergent box all the way to the end, otherwise the equipment will not be able to absorb detergent / softener from the detergent box during operation. If the automatic detergent box is not completely closed, the equipment will not work properly, and water may leak through the handle of the detergent box.

When cleaning the automatic detergent box, be sure to remove the residual detergent and softener, and also clean the bottom of the container shell, otherwise it may cause abnormal automatic delivery.

Do not leave detergent or softener in the storage chamber for a long time, as they will harden and cannot be automatically dispensed.

Do not place the detergent box in the dishwasher for washing.

CLEANING THE WATER SUPPLY HOSE, DETERGENT DISPENSER HOUSING, AND RUBBER DOOR GASKET

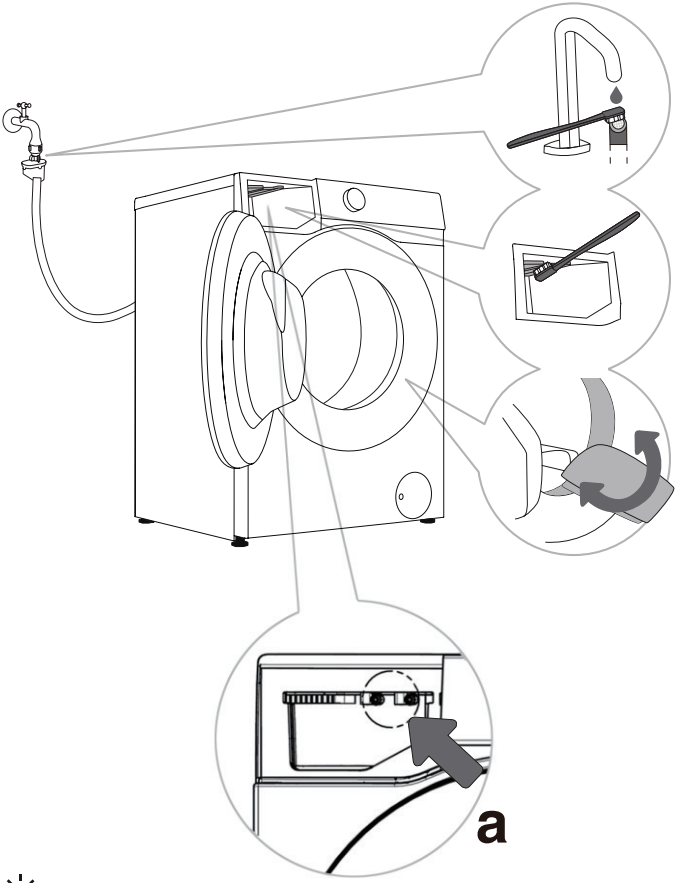

1 Clean the water supply hose filter regularly.

2 Use a brush to clean the entire detergent dispenser housing, especially the nozzles on the top.

3 After every wash, wipe the rubber door seal to extend its life cycle. To prevent mould growth on the seal, leave the door slightly open after washing to allow moisture to evaporate before closing the door.

When the user suspects that the detergent / softener is not being administered, it can be checked by the following methods:

1. Verify that the automatic detergent / softener dosing is set to ON.
2. Pull out the automatic detergent box, check whether the bottom sealing ring is loose or damaged (Figure a). If it is loose or damaged, please call the after-sales service phone for maintenance and replacement.
3. Reinstall the automatic detergent dispenser and determine whether to dispense the detergent in the following manner.

• Pull out the detergent box and make sure there is no visible detergent / softener in the detergent / softener compartment.

• Check whether the detergent is delivered normally: Select and run the Quick 15' program, press the pause key when running for about 2 minutes, and open the machine door.
Check whether the water in the container contains foam and the smell of detergent.

• Check if the softener is properly placed: Confirm that the “Dispenser 2” is set to Softener. Select and run the Rinse+ Spin program, press the pause button when it runs for about 15 minutes, and open the door.
Check the water in the drum for foams and softener smells.

• If the water in the tank contains foam and the smell of detergent / softener, the automatic delivery function of the device is normal; otherwise, please call the after-sales service phone for repair or replacement.

CLEANING THE PUMP FILTER

Water may be spilled when cleaning the pump filter. It is therefore recommended to place an absorbent cloth on the floor.

Make sure the water has cooled down before you release it from the appliance.

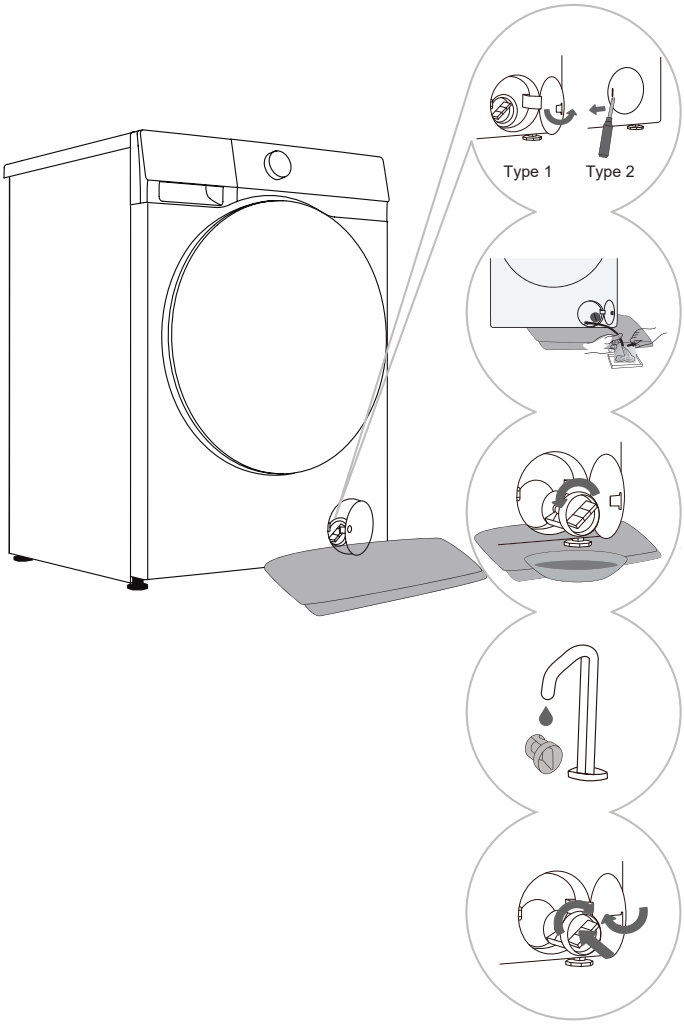

1 Open the pump filter cover.Type 1: Press the pump filter cover to pop it open.Type 2: Use a suitable tool (flathead screwdriver or similar) toOpen the pump filter cover. (The type varies depending on the model.)

2 Place a towel under the filter cover. If the appliance is provided with a drain hose, place the end of the hose into a container. Rotate the drain hose plug until it loosens and remove it to allow the water to drain naturally. Then reinstall the drain hose plug. If no drain hose is equipped, place a container under the pump filter. (The type varies depending on the model.)

3 Slowly rotate the pump filter counterclockwise. Pull out the pump filter to allow the water to drain slowly.

4 Clean the pump filter under running water.

5 Reinstall the pump filter as shown in the figure and tighten it by rotating it clockwise. For a good seal, the filter gasket surface should be clean.

The pump filter must be timely cleaned, especially after washing very fleecy, woolly, or very old laundry.

Also clean the pump filter if the appliance cannot start the spinning cycle or when there is debris in the pump (buttons, coins, hair pins or clips etc.).

Do not open the pump filter while the appliance is running. Do not operate the appliance until the pump filter is securely installed to avoid leaks or malfunctions.

CLEANING THE INLET FILTER

Check and clean the inlet filter regularly.
Clean the inlet filter immediately if water supply is slow.
Operation procedures are as follows:

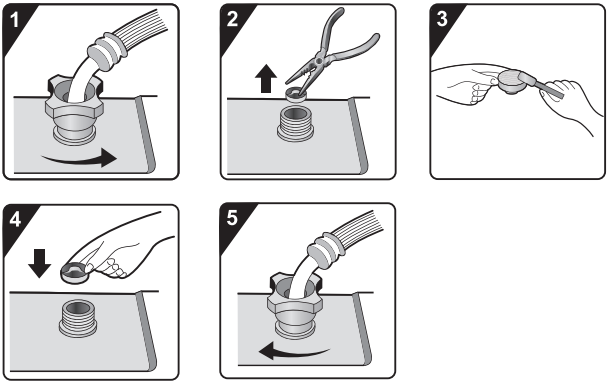

1 Close the water tap and unscrew the water supply hose.

2 Remove the inlet filter.

3 Clean the inlet filter.

4 Reinstall the inlet filter.

5 Connect the water supply hose. Open the water tap and ensure there are no leaks at the connection.

The inlet filter collects impurities and sediment from the water supply. It is recommended to clean it at least every six months, or more frequently if you have hard water or notice scale buildup.

CLEANING THE EXTERIOR

Always disconnect the washer dryer from the power mains before cleaning.

Clean the washer dryer exterior and display unit using a soft, damp cotton cloth and water. Then, use a soft, dry cloth to wipe the appliance dry.

Do not use any solvents or cleaning agents that could damage the washer dryer (please observe the recommendations and warnings provided by the cleaning agent manufacturers).

Clean the appliance door with a damp cloth, and then wipe it dry with a soft, dry cloth.

Do not use excessive water to clean the appliance.

TROUBLESHOOTING

The appliance is equipped with a number of automatic safety features to detect faults and take effective safety measures in a timely manner.
These faults are usually minor and can be rectified quickly.
If the appliance cannot operate normally, a fault message will appear on the screen. Please refer to the warning message for the appropriate action.
If the recommended troubleshooting methods do not resolve the problem, please contact after-sales service.
The user will assume all liability for any consequences arising from repairs carried out by themselves or unauthorised personnel.

Fault phenomenon	Recommended countermeasures
Machine fails to start	◇ Check whether the power cord is plugged into the socket and whether the socket is working functionally (by testing it with another appliance). ◇ Check whether the door is properly closed. ◇ Check whether the "**Start**/Pause" button is pressed. **Machine stops during normal operation** ◇ Check whether door is properly closed. Close the door and press the "**Start**/Pause" button. ◇ Check for excessive foam. The appliance may pause the programme for defoaming. After the defoaming process, the appliance will automatically resume operation. ◇ Check whether the safety protection has been activated.
Time displayed at the start of the programme increas-es or decreases	This is the adaptive adjustment of the appliance to the factors that influence the washing time. ◇ Excessive foam. ◇ Unbalance caused by large laundry. ◇ Extended heating time due to low water intake temperature. As a result of these factors, the remaining time displayed is recalculated and updated accordingly (if the appliance is making an unbalance adjustment, the time displayed remains unchanged). In addition, the appliance detects the load during the water supply and adjusts the programme time accordingly (fuzzy control).
Residual detergent or other additives in the detergent drawer after washing	◇ Check whether the detergent drawer is correctly installed and kept clean. ◇ Check whether the water pressure is normal and whether the inlet filter is clogged (see chapter "MAINTENANCE AND CLEANING").
Odour in the machine	◇ The odour may be caused by the rubber materials inside the appliance. It is the rubber smell, which dissipates after a few uses.

The warranty does not cover the faults or failures resulting from external factors (lightning strike, power grid failures, natural disasters etc.).

Fault phenomenon	Recommended countermeasures
Abnormal sound/noise during washing	◇ Foreign objects such as keys, coins or pins may have fallen into the drum. Stop the appliance and check for foreign objects in the drum. If noise persists after restarting, please contact after-sales service. ◇ Laundry may be unevenly distributed in the drum. Pause the programme, unlock the door, and redistribute the laundry.
Intense vibrations during spinning	◇ Check whether the appliance is level and whether all four feet are firmly seated on the floor. ◇ Check whether the transport screw/rods have been removed. Transport screw/rods must be removed before using the appliance. ◇ Check whether all foam supports have been removed from the bottom of the appliance.
Poor spinning effect	The appliance is equipped with a balance detection and correction system. After detecting unbalance caused by heavy laundry (e.g., bathrobes) and several spinning attempts, the system automatically reduces the spinning rate or even stops the spinning process to protect the appliance. ◇ If the laundry is still very wet after spinning, take the laundry out of the drum, shake it loose, and then select the spinning programme again. ◇ Excessive foam may impair the spinning effect. Make sure to use an appropriate amount of low-foaming detergent. ◇ Check whether the spinning rate is set to "0" or "No Spin".
Water leakage	◇ Leak from the water supply hose. Check the connection between the tap and the water supply hose connector for leaks. If there is a leak, wrap sealing tape around the end of the tap or replace the tap. It is recommended to check the connection between the water supply hose connector and the inlet valve for tightness. Tighten the connection to eliminate leaks. ◇ Leak from the drain hose. For top-drain models, the drain hose clips must not be removed as this will result in a continuous water discharge. ◇ Leak from the detergent drawer. The detergent drawer is not closed tightly. Push the handle to close the detergent drawer tightly. ◇ Leak from the door seal. Check the door seal for foreign objects and clean if necessary.
Wrinkled laundry	◇ The laundry is not removed promptly from the drum. After the wash cycle is completed, remove the laundry from the drum promptly. ◇ The appliance is overloaded. The drum should not be full of laundry and the door should be easy to close. ◇ The spinning rate is too high. Set a suitable spinning rate for the type of laundry.

DRY FAULT (FOR TUMBLE DRYER MODELS)

Fault phenomenon	Recommended countermeasures
Washer dryer does not carry out drying process	◇ Check whether the drying programme is set up. ◇ Check whether the water tap is unopened. ◇ Check whether the door is properly closed. ◇ Check whether the load is excessive (see PROGRAMME TABLE for capacity requirements), and take out part of the laundry to dry again.
Poor drying effect	◇ Check whether the load is excessive. If so, it will cause unsatisfactory drying effect and increased wrinkling. Separate the laundry in the drum for individual drying. ◇ Check if heavier items (e.g., thick cotton) are mixed with lighter ones (e.g., synthetic fabrics). ◇ Dry laundry separately by type.
Excessive drying time	◇ Check whether the load is excessive (see PROGRAMME TABLE for capacity requirements), and take out part of the laundry to dry again. ◇ Laundry is not sufficiently spun (see section “Poor spinning effect" for guidance). ◇ A large amount of thicker laundry (e.g., jeans).
Odour during drying	◇ Using detergents or softeners with strong chemical odours may cause odours during drying. ◇ If the appliance is not thoroughly cleaned, residual dirt may produce odours while drying. Clean the appliance regularly (see chapter “MAINTENANCE AND CLEANING”) and promptly remove laundry after drying.

FAULT CODES AND TROUBLESHOOTING

If the unit is not operating normally and the following codes are displayed, this may not indicate a fault. Please refer to the FAULT CODES for appropriate action.

Problem/Fault	Description	What to do?
F01	Water inflow fault	Check the following: 1. Is the water tap is open? Is the pressure too low? 2. Is the water supply hose pinched? 3. Is the Inlet filter clogged? 4. Is the water supply hose frozen? After troubleshooting is finished, press the “Start/Pause” button to continue operation.
F03	Water discharge fault	Check the following: 1. Is the drain hose pinched? Does the water flow through the hose? 2. Is the filter on the drain hose clogged? 3. Is the drain hose frozen? After troubleshooting is finished, press the “Start/Pause” button to continue operation.
F24	Overflow	Pause and restart the programme. If the appliance continues to overflow, close the water tap and contact a service technician.
F13	Door locking fault	Door is closed, but it cannot be locked. Switch the appliance off and on again. Then restart the washing programme. If the fault persists, contact a service technician.
F14	Door unlocking fault	Door is closed, but it cannot be unlocked. Switch the appliance off and then back on. If the fault persists, contact a service technician.
Other	Electronic module fault	Switch the appliance off and then back on. Restart the washing programme. If the fault persists, contact a service technician.
Unb	Unbalance alarm	Unbalance alarm shall be solved by the following methods: 1. Laundry tangling If the laundry is tangled, first switch off the appliance, open the door, shake the laundry loose and put it back in the drum. Then close the door and select the spinning programme again. 2. Underweighted laundry Switch off the appliance, open the door and load additional laundry (or one or two towels). Then close the door and select the spin program again.
F15-F18	Abnormal drying (for tumble dryer models)	Switch the appliance off and then back on.

SERVICING

BEFORE CALLING A SERVICE TECHNICIAN

When you contact the service centre, please specify your appliance model.

The model, code / ID, type and serial number are indicated on the nameplate of the appliance.

⚠ In case of a defect, only use spare parts approved by authorised manufacturers.

Repairs or warranty claims due to incorrect connections or misuse of the appliance are not covered by the warranty. In such cases, the cost of repair shall be borne by the user.

USAGE RECOMMENDATIONS

When washing colored clothes for the first time, wash them separately by color.

Wash heavily soiled laundry in smaller amounts, with increased powder detergent or a Prewash cycle (if available). Apply a special-purpose stain remover on stubborn stains before the wash. We recommend referring to “stain removal tips”.

If you often wash laundry at low temperatures and with liquid detergents, bacteria may develop and cause odour in the washer dryer. To prevent such odour, we recommend running “Drum Clean” (or other high-temperature programmes) from time to time.

We recommend avoiding washing very small amounts of laundry as this will lead to excessive use of energy and poor washer dryer performance.

Loosen any folded or tangled laundry before putting it into the drum.

Only use detergents for washer dryer.

If water hardness exceeds 14°dH, water softener should be used. Heater damage resulting from incorrect use of water softeners shall not be covered by the warranty. Check the information on water hardness with your local water supply company or authority.

Use of chlorine-based bleaches is not recommended as they can damage the heater.

If you use a descaling agent, bleach, or dye, only use the kind that is suitable for use in the appliance.

Do not use solvents or similar chemicals (e.g., paint thinner, turpentine, gasoline).

Do not add hardened lumps of powder detergent into the detergent dispenser as this may clog the piping in the washer dryer.

Powder or liquid detergent should be added according to the manufacturer's instructions, washing temperature, and selected programme.

When using concentrated liquid laundry care products, we recommend diluting them with water to prevent clogging the detergent drawer drain.

Liquid detergent is suitable for washing programme without a prewash cycle.

Exercise caution to avoid mixing detergent and softener.

At higher spinning rates, there will be less residual moisture in the laundry. As a result, drying in a tumble dryer will be more economical and faster.

STAIN REMOVAL TIPS

Before using special-purpose stain removers, try using the natural methods that do not harm the environment on less stubborn stains. However, timely treatment makes stain removal easier! Remove stains by rinsing with cold (lukewarm) water - but never with hot water!

Stains	Stain removal
Mud	When the stain is dry, first scrape it off the laundry before washing it in the washer dryer. If the stain is stubborn, soak it with an enzyme-based stain remover before the wash. If the stain is not stubborn, wash the laundry with liquid or powder detergent and water before the wash.
Antiperspirant	Before washing in the appliance, apply liquid detergent onto the laundry. Apply stain removers on any stubborn stains. Alternatively, use oxygen-based bleach for the wash.
Tea	Soak or rinse the laundry in cold water and add stain remover if necessary.
Chocolate	Soak or rinse the laundry with lukewarm soapy water. Then, apply lemon juice and rinse.
Ink	Before washing in the appliance, apply stain remover on the stain. You may also use denatured alcohol. Turn the laundry inside out and place a paper towel under the stain. Use the alcohol on the back side of the stain. At the end of the process, thoroughly rinse the laundry.
Felt tip pens	Dilute some starch in water and apply it to the stain. When it dries, scrape it off with a brush. Then, put the laundry into the appliance to wash.
Baby (urine, mud, food stains)	Before washing in the appliance, soak the stains in lukewarm water for at least half an hour. For easier stain removal, add an enzyme-based stain remover.
Grass	Before washing in the appliance, soak the laundry in an enzyme-based stain remover. Grass stains can also be removed by soaking (for approx. 1 hour) in diluted lemon juice or distilled vinegar.
Egg	Soak the laundry in an enzyme-based stain remover. Soak in cold water for at least 30 minutes, or a few hours if the stains are stubborn. Then, wash in the appliance.
Coffee	Soak the laundry in salt water. If the stain is not fresh, soak it with a mixture of glycerine, ammonia and alcohol.
Shoe polish	Apply cooking oil to the stain and rinse.
Blood	Fresh stain - Rinse the laundry with cool water and wash it in the washer dryer. Dried stain - Soak the laundry in an enzyme-based stain remover. Then, wash in the appliance. If the stain does not vanish, try to remove it with a bleach suitable for your laundry.

Stains	Stain removal
Glue, chewing gum	Place the laundry in a bag and put it in the freezer until the stain hardens. Then remove it with a blunt knife. Dilute the stain with a prewash stain remover and rinse thoroughly. Finally, wash the laundry in the appliance.
Makeup	Use a stain remover for the prewash, then wash in the appliance.
Butter	Before washing in the appliance, apply stain remover onto the laundry. Then, rinse with hot water (as hot as the fabric allows).
Milk	Soak the laundry in an enzyme-based stain remover. Soak for at least 30 minutes, or a few hours if the stains are stubborn. Then, wash in the appliance.
Fruit juice	Apply a mixture of salt and water on the stain. Leave to take effect for a while, then rinse. You can apply sodium bicarbonate, distilled vinegar or lemon juice on the stain before washing in the appliance. For old stains, use glycerine. After 20 minutes, rinse with cold water. Finally, wash the laundry in the appliance.
Wine	Soak the laundry in cold water for at least 30 minutes. Also, use a stain remover. Then, wash in the appliance.
Wax	Put the laundry into the freezer until the wax hardens. Then, scrape it off. Remove the remaining wax by placing a paper towel onto the stain, and then heat it with an iron until the paper absorbs the wax.
Sweat	Before washing in the appliance, rub liquid detergent thoroughly into the stain.
Chewing gum	Put the laundry into the freezer until the chewing gum hardens. Then, wash in the appliance.

DISPOSAL

Packaging is made of environmentally friendly materials that can be recycled, disposed of, or destroyed without any hazard to the environment. To this end, packaging materials are labelled appropriately.

The symbol on the product or its packaging indicates that the product should not be treated as normal household waste. Take the product to an authorised collection centre for waste electric and electronic equipment processing.

When disposing of the washer dryer at the end of its useful life, remove all power cords, and destroy the door latch and switch to prevent the door from locking or latching, and to prevent children or small animals from becoming trapped inside and causing a hazard.

This appliance is marked according to the European directive on waste (WEEE).

Correct disposal of the product will help prevent any negative effects on the environment and health of people, which could occur in case of incorrect product removal. For detailed information on removal and processing of the product, please contact the relevant municipal authority in charge of waste management, your household waste disposal service, or the store where you bought the product.

Hisense

life reimagined

2471697-X08064176A