Form No. 3355–544 Rev. A

# Spark Arrestor Kit

## Groundsmaster® 7200/7210 Traction Units

**Part No. 112–1688**

**Installation Instructions**

**Important** When finished installing the spark arrestor, store this sheet with your traction unit *Operator's Manual* for future reference.

## Loose Parts

**Note:** Use the chart below to identify parts for assembly.

| Description | Qty. | Use |
|---|---|---|
| Spark arrestor | 1 | Installing the spark arrestor |
| Screw | 1 | |

## Installing the Spark Arrestor

1. Park on level surface,disengage attachment, set the parking brake, stop the engine, and remove the ignition key.
2. Allow the traction unit to cool completely.
3. Raise the hood and support it with the prop rod.
4. Measure and cut 2 inches off the end of the tail pipe (Fig. 1). Remove all burrs from the tail pipe.

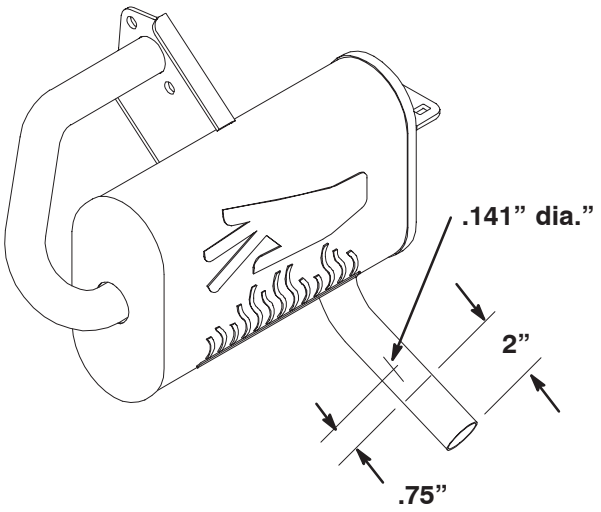


**Figure 1**

5. Locate, mark and drill a .141 inch diameter hole .75 inch from the end of the tail pipe (Fig. 1).
6. Slide the spark arrestor onto the tail pipe and align the holes.

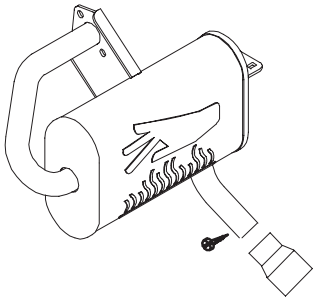

**Figure 2**

**Important** Do not use a hammer or other instrument to pound the arrestor onto the exhaust outlet. Pounding on the arrestor will damage it.

7. Secure the Spark Arrestor to the tail pipe with the enclosed screw.

## Maintaining the Spark Arrestor

Inspect the spark arrestor every 50 hours for damage, such as holes in the screen, and for build-up on the screen. If it is damaged, replace it with a new spark arrestor. If it is dirty, remove it and clean the screen with a wire brush and/or soak it in solvent. Install it as indicated in the previous procedure.

© 2006 by The Toro Company
8111 Lyndale Avenue South
Bloomington, MN 55420-1196



All Rights Reserved