English

USER MANUAL

MULTI PRODUCT USER MANUAL

- This manual is for TCL and iFFALCON multiple models.
- This is manual for website and might miss essential contact information which is available in manual provided with TV in the carton box.

REPORTING SAFETY ISSUES

If you identify a safety defect or have concerns about product safety:

Contact the TCL Customer Support team via the form at our website click Support then contact us for TV and home appliances

Email: safetyeu@tcl.com

Website: www.tcl.com

Website: www.iffalcon.com

Safety

Ensure that your domestic mains supply voltage matches the voltage indicated on the identification sticker located at the back of your set. Where the mains plug, AC inlet or an appliance coupler is used as disconnect device, it shall remain readily operable.

On certain models, the light indicator is located at the side of the TV set. The absence of a light indication at the front does not mean that the TV set is fully disconnected from the mains. To disconnect the TV set completely, the mains plug must be pulled out.

The TV set's components are sensitive to heat. The **maximum ambient temperature** should not exceed **35º** Celsius. Do not cover the vents at the back or sides of the TV set. Leave sufficient space around it to allow adequate ventilation. Install the appliance away from any source of heat (fireplace, etc.) or appliances creating strong magnetic or electric fields.

Moisture in rooms where the set is installed should not exceed **75%** humidity. Moving the set from a cold place to a warm one can cause condensation on the screen (and on some components inside the TV set). Let the condensation evaporate before switching the TV set on again.

The ⏻ or **POWER/**⏻ button on the TV set or the ⏻ button on the remote control can be used to switch it on and put it into standby mode. If you are **not going to be watching the TV for a lengthy period of time**, switch it off completely by removing the plug from the mains power socket.

During **thunderstorms**, we recommend that you disconnect the TV set from the mains and aerial so that it is not affected by electrical or electromagnetic surges that could damage it. For this reason, keep the **mains and aerial sockets** accessible so they can be **disconnected**, if necessary.

Unplug the TV set immediately if you notice it giving off a **smell of burning** or **smoke**. You must never, under any circumstances, open the TV set yourself, as you run the risk of an **electric shock** in doing so.

WARNINGS

This appliance is intended for domestic household use only and should not be used for any other application, such as for non-domestic use or in a commercial environment.

If the external flexible cable or cord of this product is damaged, it shall be replaced by the manufacturer or his service agent or a similar qualified person in order to avoid a hazard.

Leave more than 10cm clearance around the television to allow adequate ventilation. The ventilation should not be impeded by covering the ventilation openings with items, such as newspapers, table-cloths, curtains, etc.

The apparatus shall not be exposed to dripping or splashing and no objects filled with liquids, such as vases shall be placed on the apparatus.

Batteries (battery pack or batteries installed) shall not be exposed to excessive heat such as sunshine, fire or the like.

To reduce the risk of fire or electric shock, do not expose this apparatus to rain or moisture.

A television set may fall, causing serious personal injury or death. Many injuries, particularly to children, can be avoided by taking simple precautions such as:

- ALWAYS use cabinets or stands or mounting methods recommended by the manufacturer of the television set.
- ALWAYS use furniture that can safely support the television set.
- ALWAYS ensure the television set is not overhanging the edge of the supporting furniture.
- ALWAYS educate children about the dangers of climbing on furniture to reach the television set or its controls.
- ALWAYS route cords and cables connected to your television so they cannot be tripped over, pulled or grabbed.
- NEVER place a television set in an unstable location.
- NEVER place the television set on tall furniture (for example, cupboards or bookcases) without anchoring both the furniture and the television set to a suitable support.
- NEVER place the television set on cloth or other materials that may be located between the television set and supporting furniture.
- NEVER place items that might tempt children to climb, such as toys and remote controls, on the top of the television or furniture on which the television is placed.

If the existing television set is going to be retained and relocated, the same considerations as above should be applied.



Equipment with this symbol is a Class II or double insulated electrical appliance. It has been designed in such a way that it does not require a safety connection to electrical earth.
Equipment without this symbol is a Class I electrical appliance. It shall be connected to a mains socket outlet with a protective earthing connection.



To prevent the spread of fire, keep candles or other open flames away from this product at all times.



This symbol indicates that high voltage is present inside. It is dangerous to make any kind of contact with any internal part of this product.



This symbol indicates that the fuse may be in the neutral, and that the mains shall be disconnected to de-energize the phase conductors.

Do not remove the TV's cover (or back). There are no user-serviceable parts inside. All servicing must be performed by qualified service personnel.

To prevent injury, this apparatus must be securely attached to the floor/wall in accordance with the installation instructions.

To reduce the risk of RF exposure, the use distance of this apparatus should be at least 100cm.

If an outside antenna or cable system is connected to the product, be sure the antenna or cable system is grounded by a skilled person so as to provide some protection against voltage surges and built-up static charges.

TV screen

The TV screen used in this product is made of glass. Therefore, it can break when the product is dropped or impacted upon by other objects.

The TV screen is a very high technology product, giving you finely detailed pictures. Occasionally, a few nonactive pixels may appear on the screen as a fixed point of blue, green or red. This does not affect the performance of your product.

Care

Use a glass-cleaning product to clean the screen and a soft cloth and mild detergent to clean the rest of the set.

Important: Using strong detergents, alcohol-based and abrasive products may damage the screen.

Dust the vents at the back and sides regularly. Using solvents, abrasive or alcohol-based products could damage the TV set. If an object or liquid enters the appliance, unplug it immediately and have it checked by an authorized engineer. Never open the appliance yourself since this may put you at risk or damage the appliance.

ESD regulation



This apparatus meets ESD performance criteria. In case the apparatus does not recover in Ethernet connection mode due to electrostatic discharge, user interference is required.

Bluetooth function notice

Bluetooth® technology (if available in your TV) uses 2.4GHz frequency thus close proximity to Wi-Fi access points, routers or microwave ovens might interfere with Bluetooth audio streaming. If you face interruptions in audio reception, you should restart your Bluetooth device to find frequency with less interferences and if you continue to face issues you should move closer to TV or increase space between TV and source of interferences.

Hanging the TV set on the wall

Warning: This operation requires two people.

To ensure a safe installation, observe the following safety notes:

- Check that the wall can support the weight of the TV set and wall mount assembly.
- Follow the mounting instructions provided with the wall mount. For certain models, make sure to screw the hexagonal VESA wall mounting screw bosses (and screws) provided with the set into the nuts for the wall mount at the back of your set before your wall mounting.
- The TV set must be installed on a vertical wall.
- Make sure to use only screws suitable for the material of the wall.
- Make sure that the TV set cables are placed so that there is no danger of tripping over them.

All other safety instructions about our TV sets are also applicable here.

Multi product user manual

The features described in this manual are common to most models. Some features may not be available on your TV and/or your TV may include features that are not described in this user manual. The illustrations in this manual may differ from the actual product. Please refer to the actual product.

Device update

Typically, some devices are updated quarterly, but not always so specific. Some devices, especially those that went on sale more than three years ago, will only be updated if a critical vulnerability is found and fixed.

Cyber security requirement

To protect your personal data, this radio equipment requires you to create a strong and unique password upon first startup to access system settings and/or user accounts.

Your password must meet the following requirements:

- minimum of 8 characters,
- at least one uppercase letter,
- at least one lowercase letter,

- at least one number,
- at least one special character (e.g. !, @, #).

Avoid using obvious or reused passwords. Do not share your password with others.This step helps protect your radio equipment against unauthorized access and ensures compliance with the cybersecurity requirements introduced by EU Regulation 2022/30 under the Radio Equipment Directive 2014/53/EU.

Battery safety information

- Use only the recommended AAA batteries for the remote control.
- Replace batteries with the same or equivalent type to avoid explosion risks.
- Do not expose batteries to excessive heat such as sunlight or fire.
- Remove batteries if the remote will not be used for an extended period.
- Dispose of used batteries responsibly at local recycling facilities in accordance with EU regulations.
- Open the battery cover.
- Insert two AAA batteries, ensuring correct polarity (+/-).
- Close the cover securely.

Examples that shall be considered include:

- Disposal of a battery into fire or a hot oven, or mechanically crushing or cutting of a battery, that can result in an explosion.
- Leaving a battery in an extremely high temperature surrounding environment that can result in an explosion or the leakage of flammable liquid or gas and a battery subjected to extremely low air pressure that can result in an explosion or the leakage of flammable liquid or gas.

Environmental and safety compliance

This product complies with EU Directives for product safety, including CE marking.

Follow all safety and installation instructions to ensure compliance with:

- EN 62368-1: Audio/video equipment safety standards.
- General Product Safety Regulation (GPSR) requirements.

Disclaimer

This product is CE marked and conforms to European safety standards. Failure to follow these safety guidelines may result in injury, damage to the product, or voided warranties.

English

Information for Users on Disposal of Old Equipment and Batteries

[European Union]



Products

These symbols indicate that the electrical and electronic equipment and the battery with this symbol should not be disposed of as general household waste at their end-of-life. Instead, the products should be handed over to the applicable collection points for the recycling of electrical and electronic equipment as well as batteries for proper treatment, recovery and recycling in accordance with your national legislation and the Directive 2012/19/EU, 2006/66/EC and 2008/12/EC.



Pb

Battery

Notice:

The sign Pb below the symbol for batteries indicates that this battery contains lead.

By disposing of these products correctly, you will help to conserve natural resources and will help to prevent potential negative effects on the environment and human health which could otherwise be caused by inappropriate waste handling of these products.

For more information about collection points and recycling of these products, please contact your local municipal office, your household waste disposal service or the shop where you purchased the product.

Penalties may be applicable for incorrect disposal of this waste, in accordance with national legislation.

[Business users]

If you wish to dispose of this product, please contact your supplier and check the terms and conditions of the purchase contract.

[Other Countries outside the European Union]

These symbols are only valid in the European Union. If you wish to dispose of these items, please do so in accordance with applicable national legislation or other rules in your country for the treatment of old electrical equipment and batteries.

Statement of Compliance:

2023 No. 1007 The Product Security and Telecommunications Infrastructure (Security Requirements for Relevant Connectable Products) Regulations 2023
The product is in compliance with the following standard(s) or normative document(s):

ETSI EN 303 645 V2.1.1:2020-06
Provision 5.1-1
Provision 5.1-2
Provision 5.2-1
Provision 5.3-13

The full text of the UK declaration of conformity is available at the following internet address: www.tcl.com.

Choose the model name and go to DOWNLOADS.

Declaration of Conformity

CE

Hereby, TCL declares that the radio equipment type TV is in compliance with Directive 2014/53/EU. The full text of the EU declaration of conformity is available at the following internet address: www.tcl.com. Choose the model name and go to DOWNLOADS.

Hereby, TCL declares that the radio equipment type TV is in compliance with Directive 2014/53/EU. The full text of the EU declaration of conformity is available at the following internet address: www.iffalcon.com. Choose the model name and go to DOWNLOADS.

UK CA

Applies to products intended for the UK market.

Hereby, TCL declares that the radio equipment type TV is in compliance with the relevant UK statutory requirements. The full text of the UK declaration of conformity is available at the following internet address: www.tcl.com. Choose the model name and go to DOWNLOADS.

Hereby, TCL declares that the radio equipment type TV is in compliance with the relevant UK statutory requirements. The full text of the UK declaration of conformity is available at the following internet address: www.iffalcon.com. Choose the model name and go to DOWNLOADS.

Figures and illustrations in this User Manual are provided for reference only and may differ from actual product appearance. Product design and specifications may be changed without notice.

Contents

Important information 1

Chapter 1 - Connections

Connect the power and antenna 7
Connect Blu-ray Disc player, HD game console, HD camcorder, headphones, CI module 7
Connect to the Internet 8

Chapter 2 - Getting started

Remote control functions 9
Installing batteries 10
Switch the TV on and off 11
Initial setup 11

Chapter 3 - Basic TV operations

Accessing channels 12
Watching connected devices 12
Adjusting volume 12
Accessing Android TV homepage 12
Using TV settings menu 12

Chapter 4 - Using more of your TV

Installing channels 13
Common interface 13
Using the common interface module 13
Accessing common interface services 13
Using subtitles 13
Turning on/off subtitles 13
Enabling subtitle languages on digital TV channels 13
Selecting a subtitle type on digital TV channels 14
Using Teletext 14
Selecting decoding page language 14
Digital Teletext language 14
Consumer Electronic Control (CEC) 14
Enabling or disabling CEC 14
Using Auto power on 14
Using Auto standby 14
HbbTV 14
HbbTV access 14
HbbTV deactivation 15
Using EPG (Electronic Programme Guide) 15
Bluetooth function 15
Quick start function 15
Networked waking up 15
Software update 15
Reset to factory default settings 16
Viewing pictures, playing music and watching videos from a USB storage device 16
Accessibility 16
Enabling or disabling TalkBack 16
Enabling or disabling Text Magnification 16

Chapter 5 - Other information

Password in Parental Control 17
Troubleshooting 17

English

Chapter 1 - Connections

Notice

- This user manual applies to multiple TV models. Some features, connectors, or remote control layouts may vary depending on the specific model you own. Please refer to your actual device for details.

Connect the power and antenna

To switch on TV after connecting power cord, press ⏻ or **POWER**/⏻.

Notes:

- Position of power socket varies according to TV model.

- Disconnect the power cord before connecting devices.

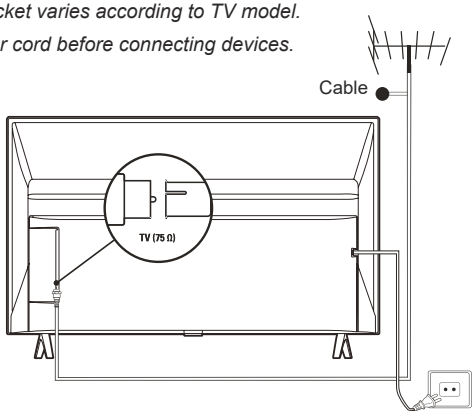

Connect Blu-ray Disc player, HD game console, HD camcorder, headphones, CI module

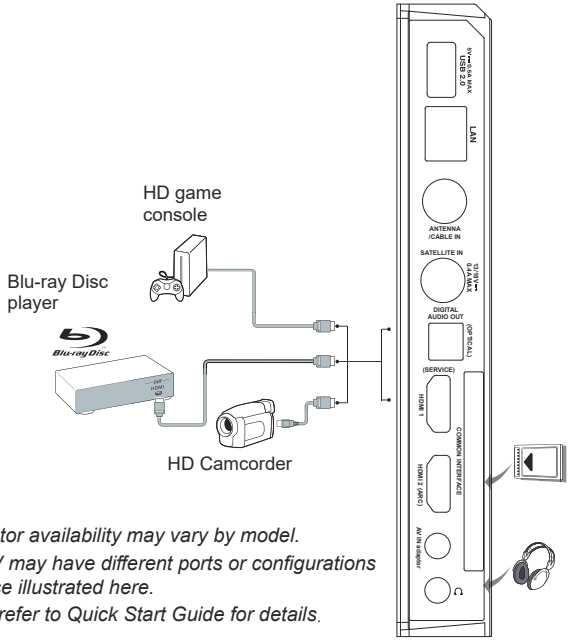

Notice

- Connector availability may vary by model.

- Your TV may have different ports or configurations than those illustrated here.

- Please refer to Quick Start Guide for details.

English

Connect to the Internet

Notes:

- *The following instructions are just the usual ways to connect your TV to the wired or wireless network. The connection method may be different depending on your actual network configuration. If you have any questions about your home network, please refer to your Internet service provider.*
- *Your TV may have different ports or configurations than those illustrated here.*

Wired connection

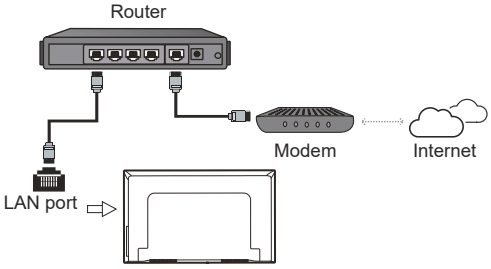

Wireless connection

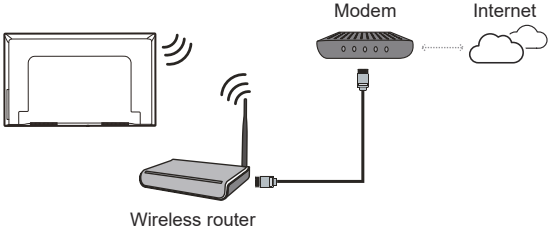

Network settings:

1. Press ⌂ on the remote control to display the Android TV homepage.
2. Press ∧ / ∨ / 〈 / 〉 to move the cursor to ⚙ on the right top of the screen and press **OK** to enter the **Settings** menu.
3. Press ∧ / ∨ to select **Network & Internet**, press **OK** to enter the submenu and follow the on-screen guidance to set up your network.

Notes:

- *Your TV might not have all connectors visible on diagram above. Number of USB and HDMI ports may vary according to TV model.*
- *Button and connector locations may vary according to TV model.*
- *USB connectors are for data input from USB drives and for connecting other relevant USB devices where applicable.*
- *All USB devices have to be directly connected to TV set without cable extenders. In case extender is required, maximum 50cm length is recommended. Longer extenders should have ferrite beads.*
- *ARC (Audio Return Channel) function is only supported on the HDMI port identified with ARC. To use ARC function, please turn on CEC function first as described in the **CEC** section.*
- *It is recommended to use high quality and well shielded HDMI cables to avoid possible interferences.*
- *Please use headphones with 3.5mm TRS connector. Excessive sound pressure from headphones can cause hearing loss.*

English

Remote control functions

Most of your television's functions are available via the menus that appear on the screen. The remote control supplied with your set can be used to navigate through the menus and to configure all the general settings.



	To switch the sound off and back on.
	Standby / quit standby.
Numeric buttons	To enter channel numbers or a digit.
	To select input source.
	To display the Quick Settings panel.
Colour buttons	To select tasks or Teletext pages; to be used for HbbTV function.
OK	To confirm an entry or selection. (Available to display the channel list in TV mode.)
Circular D-Pad	Navigation direction buttons. (∧ / ∨ / < / >)
	To return to the previous menu or quit an App.
	To display the dashboard menu.
	Use the Google search function.
	To access the Smart TV homepage.
	To access the Electronic Programme Guide (only available for digital channels).
VOL + / —	To control the volume.
123	To pop up the virtual remote control keyboard when available.
SUBTITLE	To select a subtitle language available for selected digital TV programme. Note: Not available in all regions.
	To display programme information, if available.
CH∧ / ∨	To change channels.
NETFLIX	To access Netflix if available.
prime video	To access Prime video if available.
	To access YouTube if available.
	To access Media Player.
TCL CHANNEL	To access TCL Channel.
Disney	To access Disney.

Notes:

- *This remote control is available only for selected models. The remote control type may be changed without notice.*
- *The App buttons may differ depending on the model. The App button is used for accessing the corresponding App.*

Note: Remote control availability may vary by model. Your TV may have different remote controls or configurations than those illustrated here.

Installing batteries

1. Push to open the back cover as illustrated.
2. Insert two AAA batteries according to the polarities marked on the batteries case.
3. Replace the back cover as illustrated.

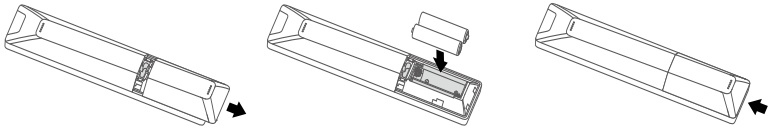

Note: The remote control type may be changed without notice.

CAUTION: Risk of fire or explosion if the battery is replaced by an incorrect type.

English

Important:

Batteries shall not be exposed to excessive heat such as sunshine, fire or the like. Remove batteries when the remote control is not to be used for a long time. Batteries left in equipment may cause damage through deterioration and corrosive leakage, invalidating the guarantee.

To protect the environment use local recycling facilities for battery disposal. Dispose of used batteries according to the instructions.

CAUTION: Risk of explosion if batteries are replaced by an incorrect type. Replace only with the same or equivalent type recommended by the equipment manufacturer.

You can turn on the TV from standby mode by pressing the ⏻ button on your TV set.

While the TV is on, the multi-function menu appears by pressing the ⏻ button on your TV set. For more information about how to use the multi-function menu, please refer to the figure below.

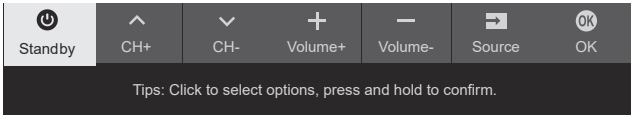

- Press the ⏻ button to move the highlight to the next function selection.
- Press and hold the ⏻ button for more than 2 seconds to confirm your selection.

Note: Please refer to the Quick Start Guide to find the ⏻ button on your TV set.

Switch the TV on and off

1. When the power cord is connected, the TV will be turned on directly or be in standby mode. If the TV is in standby mode, press the ⏻ or **POWER**/⏻ button on the set or the ⏻ button on the remote control to turn it on.
2. To put the TV into standby mode, press the ⏻ button on the remote control. The TV set remains powered up, but with low energy consumption.
3. To switch the TV off, unplug the mains plug from the mains outlet.

Initial setup

The first time you switch the set on, the **Welcome** screen appears, which guides you through the initial setup process. Follow the on-screen instructions to finish the initial setup process such as selecting the language, connecting to the network, scanning channels, and more. During each step, either make a choice or skip the step. If you skip a step, you can perform the setup later from the settings menu.

Note: If the channel search retrieved only the analogue channels it could be caused by poor broadcasting and therefore is not covered by manufacturer warranty. Manufacturers cannot be held responsible for lack of or poor broadcasting in some areas.

Accessing channels

Using the numeric buttons: press the corresponding numeric buttons on the remote control to access the channels.

Using the CH∧ / ∨ buttons: press the **CH**∧ / ∨ buttons on the remote control to scroll through the channels.

Using the LIST button: press the **LIST** button on the remote control to display the channel list and press ∧ / ∨ / 〈 / 〉 and **OK** to select channels.

Watching connected devices

Press ⏎ on the remote control to display the source list. Press ∧ / ∨ to select TV or other input sources and press **OK** to confirm.

You can also press ⌂ on the remote control to display the homepage, press ∧ / ∨ / 〈 / 〉 to move the cursor to the ⏎ area on the right top of the screen, and press **OK** to enter. Then press ∧ / ∨ and **OK** to select the input source.

Adjusting volume

Volume control: press the **VOL**+ / — buttons on the remote control to increase or decrease the volume.

Sound mute: press the 🔇 button to temporarily mute the sound. Press this button again or the **VOL**+ button to restore the sound.

Accessing Android TV homepage

Allows you to enjoy Internet Applications (Apps) and specially adapted Internet websites, and perform system settings for your TV. You can make controlling with the TV remote control.

WARNING:

- Configure the network settings before using Smart TV applications.
- Slow responses and/or interruptions may occur, depending on your network conditions.
- If you experience a problem using an application, please contact the content provider.
- According to circumstances of the content provider, an application's updates or the application itself may be discontinued.
- Depending on your country's regulations, some applications may have limited service or not be supported.
- Changes in application content may be made without prior notice by the service provider.

1. Press ⌂ on the remote control to display the Android TV homepage.
2. Press ∧ / ∨ / 〈 / 〉 and **OK** to enter the desired Apps, functions or settings.
3. Press ⮌ to return to the homepage.

   Note: Since the connection with Internet takes time, it's recommended that you wait a few minutes to use the Smart TV feature after activation of TV from standby.

Using TV settings menu

Allows you to adjust TV settings, such as picture and sound.

1. Press ✿ on the remote control to display the TV settings menu.
2. Press ∧ / ∨ to select the desired item, then press **OK**/〉 to enter the corresponding submenu.
3. In submenus, press ∧ / ∨ to select menu options, then press **OK**/〉 to enter the option list, or the corresponding submenu, or press **OK** to toggle on or off, or press 〈 / 〉 to adjust the setting.
4. Press ← to return to the previous menu.
5. Press ✿ to close the menu.

   *Note: You can also press ≡ on the remote control, select **TV settings** (if available) and press **OK** to enter the TV settings menu. Some options may not be available for certain signal sources.*

Installing channels

This section describes how to search and store channels automatically. This may be done in any of the cases below:

- you have skipped the channel installation step in the initial setup;
- you are prompted that there are no channels in TV mode;
- you want to update your channels.

1. In TV mode, press ⚙ on the remote control and select **Channel > Channel scan**. Press **OK/〉** to enter.
2. The TV installs and arranges channels according to your country or region. Press ∧ / ∨ to select **Country/Region**, and press **OK/〉** to enter. Enter the default password 1234 or your own password in case you have changed the password in the **System** menu. Press ∧ / ∨ to select your country or region and press **OK** to confirm.
3. Press ∧ / ∨ to select **Automatic search** and press **OK/〉** to enter.
4. Press ∧ / ∨ to select **Tuner mode** and press 〈 / 〉 to select **Cable**, **Antenna** or **Satellite**. *(Note: **Satellite** option is available only in selected models.)*
5. Press ∧ / ∨ to select other options to configure.
6. After configuration is completed, press ∨ to select **Search** and press **OK** to start scanning channels.
7. The channel search may take a few minutes. After the automatic search, channels are arranged in a preset order. If you wish to hide or move channels, press ⚙ on the remote control, select **Channel > Channel organizer** and press **OK/〉** to enter. *(Note: **Channel organizer** option is not available when **Tuner mode** is set to **Antenna** and **Country/Region** is set to **United Kingdom**.)*

Common interface

Encrypted digital TV channels can be decoded with a common interface module and a card provided by a digital TV service operator.

The common interface module may enable several digital services, depending on the operator and services you choose (for example, pay TV). Contact your digital TV service operator for more information about services and terms.

Using the common interface module

WARNING: Switch off your TV before inserting a common interface module. Be sure to follow the instructions described below. Wrong insertion of a common interface module may damage both the module and your TV.

1. Following the directions printed on the common interface module, gently insert the module into the common interface slot on the TV.
2. Push the module in as far as it will go.
3. Turn on the TV and wait for the common interface function to be activated. This may take several minutes.

   Note: Do not remove the common interface module from the slot. Removing the module will deactivate the digital services.

Accessing common interface services

After inserting and activating the common interface module, press ⚙ on the remote control, select **Channel > Common interface** and press **OK/〉** to enter.

This menu option is only available if the common interface module is correctly inserted and activated. On-screen applications and content are provided by your digital TV service operator.

Using subtitles

You can enable subtitles for each TV channel. Subtitles are broadcast via Teletext or DVB-T/DVB-C/DVB-S/DVB-T2/DVB-S2 digital broadcasts. With digital broadcasts, you have the additional option of selecting a preferred subtitle language.

Turning on/off subtitles

1. Press ⚙ on the remote control, select **Channel > Subtitle** and press **OK/〉** to enter.
2. Select the **Subtitle** option, and press **OK** to toggle between on or off.
3. Press ⚙ to close the menu.

Enabling subtitle languages on digital TV channels

1. Press ⚙ on the remote control, select **Channel > Subtitle > Digital subtitle language 1st** and press **OK/〉** to enter.
2. Press ∧ / ∨ to select a subtitle language as your preferred language and press **OK** to confirm.
3. Press ∧ / ∨ to select **Digital subtitle language 2nd** and press **OK/〉** to enter.
4. Press ∧ / ∨ to select a secondary subtitle language and press **OK** to confirm.
5. Press ⚙ to close the menu.

Selecting a subtitle type on digital TV channels

1. Press ⚙ on the remote control, select **Channel > Subtitle > Subtitle type** and press **OK/**〉 to enter.
2. Press ∧ / ∨ to select a subtitle type and press **OK** to confirm. You can select **Hearing impaired** to display the hearing impaired subtitles with your selected language.
3. Press ⚙ to close the menu.

Using Teletext

Selecting decoding page language

1. Press ⚙ on the remote control, select **Channel > Teletext > Decoding page language** and press **OK/**〉 to enter.
2. Press ∧ / ∨ to select a proper type of language in which Teletext will display and press **OK** to confirm.
3. Press ⚙ to close the menu.

Digital Teletext language

On digital TV channels, depending on the broadcaster, you may be able to enjoy a service with multiple initial Teletext pages in different languages. This function allows you to select an available language as primary language, which relates to different initial Teletext pages.

1. Press ⚙ on the remote control, select **Channel > Teletext > Digital teletext language** and press **OK/**〉 to enter.
2. Press ∧ / ∨ to select a language and press **OK** to confirm.
3. Press ⚙ to close the menu.

Consumer Electronic Control (CEC)

Use this function to search for CEC devices connected to the HDMI sockets in your TV and enable one-touch play and one-touch standby between CEC devices.

Enabling or disabling CEC

1. Press ⚙ on the remote control, select **System > Consumer Electronic Control (CEC)** and press **OK/**〉 to enter.
2. Select the **HDMI Control** option, and press **OK** to toggle between on or off
3. Press ⚙ to close the menu.

Using Auto power on

Enables the TV to automatically power on when you power on a CEC device (e.g. DVD) with the device's remote. Press **OK** to turn it on to enable this function.

Using Auto standby

Enables all CEC devices to automatically go to the standby mode when you turn off the TV with the TV remote. Press **OK** to turn it on to enable this function.

Note: The CEC functions depend on the devices connected and it is possible that some devices may not interoperate correctly when connected to this TV. The user manual or the manufacturer of the problematic devices should be consulted for further information.

HbbTV

HbbTV (Hybrid broadcast broadband TV) is a service offered by certain broadcasters and available only on some digital TV channels. HbbTV delivers interactive television over broadband Internet. These interactive features are added to and enrich the normal digital programmes, and include services such as digital teletext, electronic programme guide, games, voting, specific information related to the current programme, interactive advertising, information magazines, catch-up TV, etc.

To use HbbTV please ensure your TV is connected to Internet and HbbTV is switched on.

Notes:

- *HbbTV services are broadcast- or country-dependent and may be unavailable in your area.*
- *You cannot download files to your TV with HbbTV function.*
- *Application provider or broadcasting related conditions may cause an HbbTV application to be unavailable momentarily.*
- *To access HbbTV applications you must connect your TV to the Internet via a broadband link. HbbTV applications may not work correctly in case of network related issues.*

HbbTV access

1. Press ⚙ on the remote control, select **System > HbbTV settings** and press **OK/**〉 to enter.
2. Select the **HbbTV** option, and press **OK** to turn it on.
3. When you tune to a digital TV channel that offers HbbTV, this will be signalled to you by an on-screen indication (generally a red button, but other colour buttons may also be used). Press the indicated colour button to open the interactive pages.
4. Use ∧ / ∨ / 〈 / 〉 and the colour buttons to navigate through the HbbTV pages and press **OK** to confirm.

English

HbbTV deactivation

To avoid disturbances that may be caused by HbbTV broadcasting tests, you can turn off the HbbTV function:

1. Press ⚙ on the remote control, select **System > HbbTV settings** and press **OK/**〉 to enter.
2. Select the **HbbTV** option, and press **OK** to turn it off to disable it.

Using EPG (Electronic Programme Guide)

EPG is an on-screen guide that displays scheduled digital TV programmes. You can navigate, select and view programmes.

1. Press **GUIDE** on the remote control, the **Programme Guide** menu will appear, which allows you to get information about the current or next programme playing on each channel. Navigate through the different programmes using the ∧ / ∨ / 〈 / 〉 buttons on the remote control.
2. Use the related buttons shown at the bottom of the screen to view EPG.
   - **Watch now** or **More**: Press **OK** to watch the selected channel or view more information about the selected programme.
   - **Programme filter**: Press ☰ to display programme filter for digital TV programmes.
   - **Custom schedule**: Press the red button to set a schedule.
   - **Select date**: Press the green button to select date.
   - **Schedule list**: Press the yellow button to view your schedule list.
3. Press **GUIDE** to exit EPG.

Bluetooth function

(not available for some models)*

Bluetooth® is a wireless technology standard for exchanging data over short distance between Bluetooth devices. You can connect Bluetooth audio device, mouse or keyboard via the TV.

1. Press ⌂ on the remote control, press ∧ / ∨ / 〈 / 〉 to move the cursor to ⚙ on the right top of the screen and press **OK** to enter.
2. Select **Remotes & Accessories > Add accessory** and press **OK** to enter. The TV will search nearby Bluetooth devices automatically. Select an available device, press **OK** and follow the guides on the screen to connect it.

   Note: Bluetooth technology (if available in your TV) uses 2.4GHz frequency thus close proximity to Wi-Fi access points, routers or microwave ovens might interfere with Bluetooth audio streaming. If you face interruptions in audio reception, you should restart your Bluetooth device to find frequency with less interferences and if you continue to face issues you should move closer to TV or increase space between TV and source of interferences.

The Bluetooth® word mark and logos are registered trademarks owned by Bluetooth SIG, Inc. and any use of such marks by TTE Corporation is under license. Other trademarks and trade names are those of their respective owners.

Quick start function

It enables you to turn on your TV faster from standby mode than turning this function off, but it will also increase standby power consumption.

1. Press ⌂ on the remote control, select ⚙ **> Device Preferences > Quick start > Enable quick start** and press **OK** to toggle between on and off.
2. Press ⮌ to return to the previous menu.

Networked waking up

This function allows you to turn on your TV from standby mode via a network. To use this function, please make sure:

1. Your TV is connected to an effective wireless home network;
2. The desired controller, such as a smartphone, is connected to the same wireless network as your TV;
3. An App which supports networked waking up function, such as Youtube, has been installed into the controller;
4. **Networked standby** is turned on in the **Network & Internet** menu from the homepage.

When the TV is in networked standby mode, you can use the App to wake up the TV remotely.

Notes:

- *This feature is disabled if you press and hold the ⏻ button on the remote control and confirm to shut the TV down.*
- *Before using the feature of networked waking up, make sure the **Quick start** function is enabled.*
- *This function may not be available for certain models.*

Software update

Notes:

- *Do not switch off or unplug the TV until the upgrade is completed.*
- *Keep successful network connection during upgrade.*

Press ⌂ on the remote control,select ⚙ **> Device Preferences > About > Software update** and press **OK** to enter. You have three options to update the software: **Network update**, **Local update** and **By channel**. Follow the on-screen instructions to complete the progress.

Reset to factory default settings

Allows you to reset the TV to factory default settings.

1. Press ⌂ on the remote control, select ⚙ **> Device Preferences > Reset > Factory data reset > Erase everything** and press **OK** to confirm.
2. Enter the password you have set or the PIN according to the on-screen prompt.
3. Select **OK** and press **OK** to confirm.
4. The **Welcome** screen appears. Follow the instructions in the section **Initial setup**.

Viewing pictures, playing music and watching videos from a USB storage device

Your TV is fitted with USB connectors that enable you to view pictures, listen to music or watch videos stored on USB drives.

When a USB device is connected, the **Query** screen appears. Follow the on-screen instructions. You can also select the **Media Player** app via the Android TV homepage to enter.

Supported file formats:

Picture	JPEG, PNG, BMP
Music/Audio	Container: MP3, AVI, AC3, AAC, FLV, MKV Codec: MPEG1 layer 3, MPEG2 layer 2/3, AC3, EAC3, AAC, LPCM
Video	Container: AVI, MP4, TS, MKV, FLV Codec: MPEG1/2/4, H.263, H.264, H.265, VP8, VP9, AV1

Notes:

- *Some USB keys and USB products like digital cameras or mobile phones are not fully compatible with USB standard so they may not work with the TV media player. Not all USB keys or devices are compatible with the USB function. Not all above formats are recognised. The encoding formats of your files will determine whether or not they can be played.*
- *Please use high speed (minimum 5MB/s read transfer) USB drives.*

Accessibility

Allows text can be heard and read by persons who are visually impaired.

Enabling or disabling TalkBack

1. Press ⚙ on the remote control, select **Settings > Device Preferences > Accessibility > TalkBack** and press **OK/** 〉 to enter.
2. Select the **Enable** option, and press **OK** to toggle between on or off.
3. Press ← to return to the previous menu.

Note: Converts on-screen text to Text-to-Speech for visually impaired persons who can interact with the product.

Enabling or disabling Text Magnification

1. Press ⚙ on the remote control, select **Settings > Device Preferences > Accessibility > Text Magnification** and press **OK/** 〉 to enter.
2. Select the **Enable** option, and press **OK** to toggle between on or off.
3. Press ← to return to the previous menu.

Note: To enlarge or zoom in on-screen text for visually impaired persons who can perceive the information.

Password in Parental Control

- Set the password in the **Settings > System > Lock** menu.
- To reset user parental control password please use 0423 code. If you forget your code, enter the reset code to override any existing codes..

Troubleshooting

Please check the following list before requesting service.

There is no picture or sound.

- Make sure the power cord is properly inserted in the power outlet.
- Make sure the source type is set correctly.
- Make sure the antenna is properly connected.
- Make sure the volume is not set to minimum or the sound is not set to mute.
- Make sure the headphones are not connected.
- The TV may be receiving a signal other than from TV broadcasting stations.

Picture is not clear.

- Make sure the antenna cable is properly connected.
- Consider whether your TV signal is being properly received.
- Poor picture quality can occur due to a VHS camera, camcorder, or other peripheral being connected at the same time. Switch off one of the other peripherals.
- The 'ghost' or double image may be caused by obstruction to the antenna due to high-rise buildings or hills. Using a highly directional antenna may improve the picture quality.
- The horizontal dotted lines shown on the pictures may be caused by electrical interference, e.g., hair dryer, nearby neon lights, etc. Turn off or remove these.

Picture is too dark, too light or tinted.

- Check the colour adjustment.
- Check the brightness setting.
- Check the sharpness function.

Remote control does not work.

- Check the batteries of the remote control.
- Make sure the remote sensor window on the TV front is not under strong fluorescent lighting.
- Try to clean the remote sensor window on the TV front with a soft cloth.

If the above suggestions do not solve your technical issue, please refer to the warranty card for service information.

Operating Conditions

Temperature 5°C–35°C (41°F–95°F)
Humidity 20–75% (non-condensing)

Storage Conditions

Temperature -15°C–45°C (5°F–113°F)
Humidity 10–90% (non-condensing)

Radio Information

- Bluetooth® transmitter frequency range: 2400–2483.5MHz
- Bluetooth® transmitter power: 6dBm (+/-3dB)
- 2.4G Wi-Fi transmitter frequency range: 2400–2483.5MHz
- 2.4G Wi-Fi transmitter power: 14dBm (+/-2dB)
- 5G Wi-Fi transmitter frequency range:
  - Band 1: 5150 – 5250MHz
  - Band 2: 5250 – 5350MHz
  - Band 3: 5470 – 5725MHz
  - Band 4: 5725 – 5850MHz
- 5G Wi-Fi transmitter power: 14dBm (+/-2dB)
- DVB-T/T2/C tuner frequency range: 42–1002MHz
- DVB-S/S2 tuner frequency range: 850–2350MHz

* Operation of 5150–5350MHz is restricted to indoor use only.

	BE	BG	CZ	DK	DE	EE	IE
	EL	ES	FR	HR	IT	CY	LV
	LT	LU	HU	MT	NL	AT	PL
	PT	RO	SI	SK	FI	SE	UK (NI)

OSS Notice

This product contains software that is licensed under free or open-source licenses. You may obtain a copy of the complete corresponding source code for a period of three years after the last shipment of this product by visiting: www.tcl.com/opensource.

This product uses the GPL (Version 2 and 3) and LGPL (version 2.1) and MPL (version 1.1).

To send inquires and requests for questions regarding open source, contact nearest TCL office.

This product uses some software programs which are distributed under the Independent JPEG Group.

This product uses some software programs which are distributed under the libpng Project.

This product uses some software programs which are distributed under the Freetype Project.

This product uses some software programs which are distributed under the zlib Project.

This product uses some software programs (libxml2, curl, expat, c-areas) which are distributed under the MIT.

This product uses CyberLink for C which is distributed under the Open Source Project.

This product uses opensl, xerces which is distributed under the Apach License Project.

GPL software: Linux Kernel, glib, libiconv, gcc libgcc, gcc libstdc++, u-Boot loader, ffmepg, util-linux-ng, e2fsprogs, wget, iptables

LGPL software: DFB (DirectFB), gstreamer, gst-plugins-base, gst-plugins-good, gst-plugins-bad, gst-plugins-ugly, gst-ffmpeg, glibc, wpa_supplicant

BSD software: webp, mng, uriparser

GNU software: dosfstools

[Legal Statement] of TCL - manufacturer of this TV set

Due to the various capabilities of products featuring the SmartTV - Services, as well as limitations in the available content, certain features, applications, and services may not be available on all devices or in all territories. Some features on SmartTV may also require additional peripheral devices or membership fees that are sold separately. Please visit our website for more information on specific device information and content availability. The services and availability of content through SmartTV are subject to change from time to time without prior notice.

All content and services accessible through this device belong to third parties and are protected by copyright, patent, trademark and/or other intellectual property laws. Such content and services are provided solely for your personal noncommercial use. You may not use any content or services in a manner that has not been authorized by the content owner or service provider. Without limiting the foregoing, unless expressly authorized by the applicable content owner or service provider, you may not modify, copy, republish, upload, post, transmit, translate, sell, create derivative works, exploit, or distribute in any manner or medium any content or services displayed through this device.

YOU EXPRESSLY ACKNOWLEDGE AND AGREE THAT USE OF THE DEVICE IS AT YOUR SOLE RISK AND THAT THE ENTIRE RISK AS TO SATISFACTORY QUALITY, PERFORMANCE AND ACCURACY IS WITH YOU. THE DEVICE AND ALL THIRD PARTY CONTENT AND SERVICES ARE PROVIDED “AS IS” WITHOUT WARRANTY OF ANY KIND, EITHER EXPRESS OR IMPLIED. TCL EXPRESSLY DISCLAIMS ALL WARRANTIES AND CONDITIONS WITH RESPECT TO THE DEVICE AND ANY CONTENT AND SERVICES, EITHER EXPRESS OR, IMPLIED, INCLUDING BUT NOT LIMITED TO, WARRANTIES OF MERCHANTABILITY, OF SATISFACTORY QUALITY, FITNESS FOR A PARTICULAR PURPOSE, OF ACCURACY, OF QUIET ENJOYMENT, AND NON-INFRINGEMENT OF THIRD PARTY RIGHTS. TCL DOES NOT GUARANTEE THE ACCURACY, VALIDITY, TIMELINESS, LEGALITY, OR COMPLETENESS OF ANY CONTENT OR SERVICE MADE AVAILABLE THROUGH THIS DEVICE AND DOES NOT WARRANT THAT THE DEVICE, CONTENT OR SERVICES WILL MEET YOUR REQUIREMENTS, OR THAT OPERATION OF THE DEVICE OR SERVICES WILL BE UNINTERRUPTED OR ERROR-FREE. UNDER NO CIRCUMSTANCES, INCLUDING NEGLIGENCE, SHALL TCL BE LIABLE, WHETHER IN CONTRACT OR TORT, FOR ANY DIRECT, INDIRECT, INCIDENTAL, SPECIAL OR CONSEQUENTIAL DAMAGES, ATTORNEY FEES, EXPENSES, OR ANY OTHER DAMAGES ARISING OUT OF, OR IN CONNECTION WITH, ANY INFORMATION CONTAINED IN, OR AS A RESULT OF THE USE OF THE DEVICE, OR ANY CONTENT OR SERVICE ACCESSED BY YOU OR ANY THIRD PARTY, EVEN IF ADVISED OF THE POSSIBILITY OF SUCH DAMAGES.

Third party services may be changed, suspended, removed, terminated or interrupted, or access may be disabled at any time, without notice, and TCL makes no representation or warranty that any content or service will remain available for any period of time. Content and services are transmitted by third parties by means of networks and transmission facilities over which TCL has no control. Without limiting the generality of this disclaimer, TCL expressly disclaims any responsibility or liability for any change, interruption, disabling, removal of or suspension of any content or service made available through this device. TCL may impose limits on the use of or access to certain services or content, in any case and without notice or liability. TCL is neither responsible nor liable for customer service related to the content and services. Any question or request for service relating to the content or services should be made directly to the respective content and service providers.