CENTR

Model: T3S-110.2
ITM. / ART. 1857443

Model: T3S-220.2

USER MANUAL

CENTR RUNR-S

IMPORTANT, RETAIN FOR FUTURE REFERENCE: READ CAREFULLY

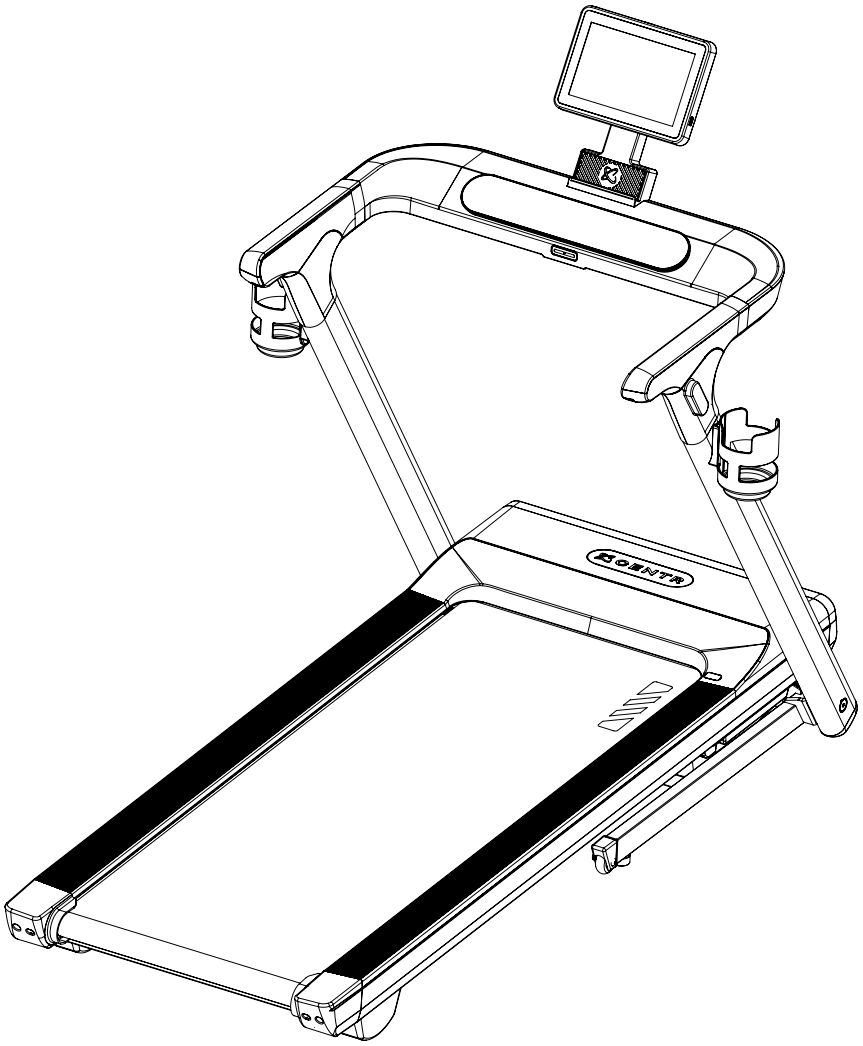

Record Serial Number Here

MADE IN CHINA
80231-EN-V2024-09-11

WELCOME

Welcome to Centr and thanks for your purchase. We're happy to have you. Please inspect your product and contact us right away if anything is missing or damaged.

Your equipment also comes with access to Centr's digital membership, unlocking tools that will fuel your active lifestyle and well-being. The Centr wellness system aligns your movement, meals and mind with expert-led programs and advice made to work together to deliver you the best results and lifelong healthy habits. Get moving with limitless ways to fuel your routine and reach your goals!

NEED HELP? WE'RE HERE FOR YOU.

US CUSTOMERS

If you have questions or issues with your equipment, please contact our US Customer Service team. Support is provided in English and Spanish.



EMAIL

hello@centr.com



PHONE

877-738-1729 (US Only)
+1 714-738-1729 (Global)
Mon-Fri 8am-5pm PT - UTC-7h/8

Support is provided in English and Spanish

GLOBAL CUSTOMERS (OUTSIDE OF US)

If you have any questions or issues with your equipment, please contact the store where your purchase was made.

PRODUCT WARRANTY

To view full warranty details, or to register your product for warranty, visit **centr.com/support**

AUSTRALIA

Our goods come with guarantees that cannot be excluded under the Australian Consumer Law. You are entitled to a replacement or refund for a major failure and for compensation for any other reasonably foreseeable loss or damage. You are also entitled to have the goods repaired or replaced if the goods fail to be of acceptable quality and the failure does not amount to a major failure.

Our goods and services come with guarantees that cannot be excluded under the Australian Consumer Law. For major failures with the service, you are entitled:

- to cancel your service contract with us; and
- to a refund for the unused portion, or to compensation for its reduced value.

You are also entitled to choose a refund or replacement for major failures with goods. If a failure with the goods or a service does not amount to a major failure, you are entitled to have the failure rectified in a reasonable time. If this is not done you are entitled to a refund for the goods and to cancel the contract for the service and obtain a refund of any unused portion. You are also entitled to be compensated for any other reasonably foreseeable loss or damage from a failure in the goods or service.

TABLE OF CONTENTS

PRODUCT WARRANTY....3

IMPORTANT SAFETY INSTRUCTIONS....6

USE OF SAFETY KEY....8

GROUNDING INSTRUCTIONS (FOR 110V MACHINES)....9

GROUNDING INSTRUCTIONS (FOR 220V MACHINES)....10

WARNING AND SERIAL NUMBER LABELS....11

HARDWARE PACK....13

ASSEMBLY....14

FEATURES OVERVIEW....24

CONSOLE OPERATION....25

FOLDING AND MOVING INSTRUCTIONS....28

MAINTENANCE AND CARE....30

ADJUSTING THE RUNNING BELT....31

LUBRICATING THE RUNNING BELT....32

TROUBLESHOOTING....33

SCAN THE QR CODE FOR USER MANUAL IN DIFFERENT LANGUAGES:

80303-ES

SPANISH

80303-FR

FRENCH

IMPORTANT SAFETY INSTRUCTIONS

SAVE THESE INSTRUCTIONS

This treadmill is built for optimum safety. However, certain precautions apply whenever you operate a piece of exercise equipment. Be sure to read the entire manual before you assemble or operate your machine. Please note the following safety precautions:

WARNING

Before using this treadmill, all users must read, understand, and carefully follow all warnings, instructions, and procedures on the treadmill and in this User Manual.

DANGER

To reduce the risk of electric shock and the injury from moving parts, always unplug this treadmill from the electrical outlet immediately after using and before cleaning or attempting any maintenance activity.

WARNING

To reduce the risk of burns, fire, electric shock, or injury to persons:

1. Consult your physician before beginning any exercise program.
2. The treadmill should never be left unattended when plugged in. Unplug from outlet when not in use, and before service or maintenance.
3. DO NOT operate the treadmill while being covered with a blanket, plastic or anything that insulates or stops airflow. Excessive heating can occur and cause fire, electric shock, or injury to persons.
4. Always keep children and pets away from the treadmill. DO NOT leave children unattended in the same room with the treadmill.
5. Only one person at a time should use the treadmill.
6. Use the treadmill only for its intended use as described in this manual. DO NOT use attachments not recommended by Centr.
7. Never operate the treadmill if it has a damaged power cord or electrical plug, if it is not working properly, if it has been dropped or damaged, or partially immersed in water. Contact Centr customer service.
8. Keep the power cord away from heated surfaces. Do not pull the treadmill by the power cord or use the cord as a handle. Do not run the power cord under or along the side of the treadmill.
9. Never operate the treadmill with the air openings blocked. Keep air openings free of lint, hair or any obstructing material.
10. Never insert objects into any openings in this treadmill. If an object should drop inside, turn off the power, unplug the power cord from the outlet and carefully retrieve it. If the item cannot be reached, contact Centr customer service.
11. Do not use this treadmill outdoors, near water, while wet, or in areas of high humidity.
12. Do not use this treadmill in areas where aerosol spray products are being used or where oxygen is being administered. Such substances create the danger of combustion and explosion.
13. To disconnect, turn power OFF at the ON/OFF switch, then remove plug from electrical outlet.
14. Connect this treadmill to a properly grounded outlet only. See Grounding Instructions, page 8.
15. If the user experiences dizziness, nausea, chest pain, or any other abnormal symptoms, STOP the workout at once. CONSULT A PHYSICIAN IMMEDIATELY.
16. This treadmill is intended for consumer home use only. Do not exceed maximum user weight of 300 lbs (136 kg).

IMPORTANT SAFETY INSTRUCTIONS

17. Inspect the treadmill for incorrect, worn, or loose components and then correct, replace, or tighten prior to use.
18. Always wear appropriate workout clothing when exercising. DO NOT wear robes or other loose clothing that could become caught in the treadmill. Running or training shoes are also required when using the treadmill.
19. Care should be used when mounting or dismounting the treadmill.
20. Read, understand, and test the emergency stop procedures before use.
21. Keep hands away from all moving parts.
22. Keep the top side of the moving surface clean and dry.
23. Disabled persons should not use the machine without a qualified person or physician in attendance.
24. Before using the machine to exercise, always do stretching exercises to properly warm up.
25. Position the treadmill on a flat and solid surface, and do not block any openings or vents in the floor.
26. DO NOT place any sharp objects around the machine.
27. Remove the Safety Key from the treadmill when not in use, and safely store out of reach of children.

WARNING

BEFORE BEGINNING ANY EXERCISE PROGRAM, CONSULT YOUR PHYSICIAN. THIS IS ESPECIALLY IMPORTANT FOR INDIVIDUALS OVER THE AGE OF 35 OR PERSONS WITH PRE-EXISTING HEALTH PROBLEMS. READ ALL INSTRUCTIONS BEFORE USING ANY FITNESS EQUIPMENT. Centr, LLC. DOES NOT ASSUME ANY RESPONSIBILITY FOR PERSONAL INJURY OR PROPERTY DAMAGE SUSTAINED BY OR THROUGH THE USE OF THIS PRODUCT.

SPACE REQUIREMENTS

This treadmill requires a minimum amount of floor space to safely operate. Keep a minimum open area of 2 m (78 in) behind the treadmill, and 0.5 m (20 in) on both sides. A space of 0.3 m (12 in) in the front is recommended for access to the power cord and switch.

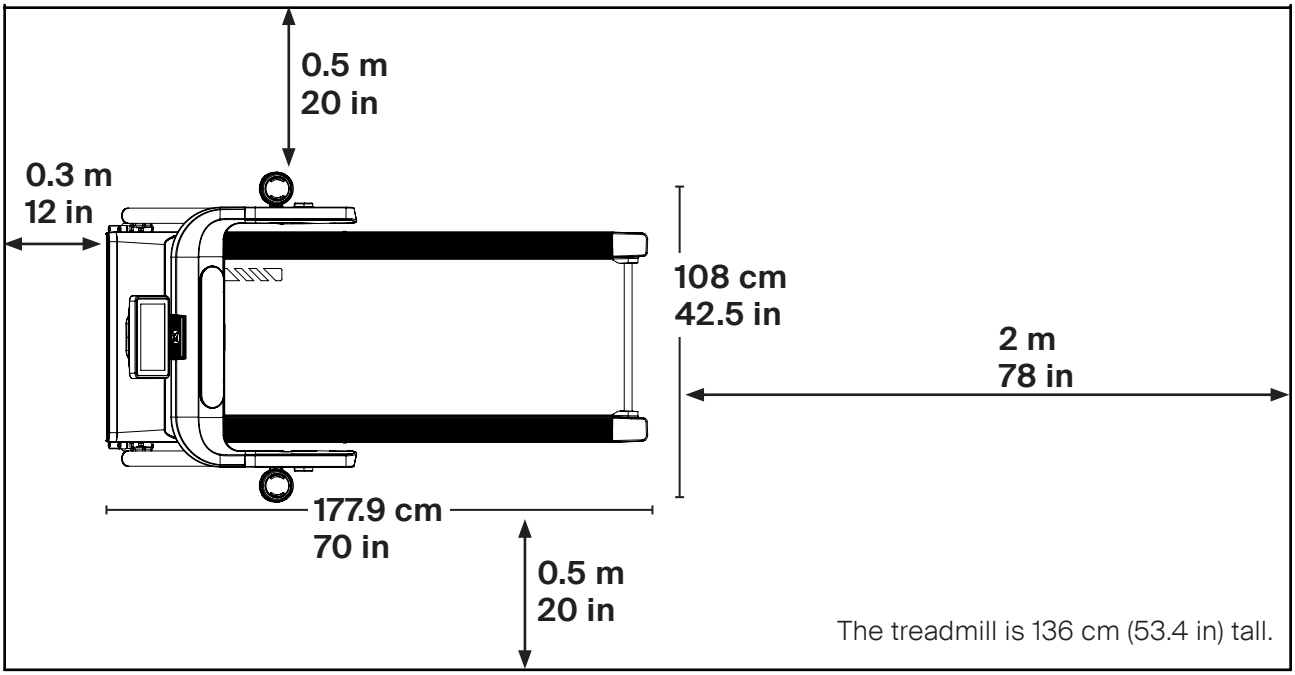

USE OF SAFETY KEY

This treadmill is designed with a removable Safety Key. If the Safety Key is removed, the treadmill will not operate and will display “Please Reinsert the Safety Key”. The console display will reset once the Safety Key is pushed back in place.

WARNING

The Safety Key red clip should be attached to the user’s clothing directly in front of the Safety Key. In case of emergency, remove the Safety Key to immediately stop the belt and shut off the treadmill.

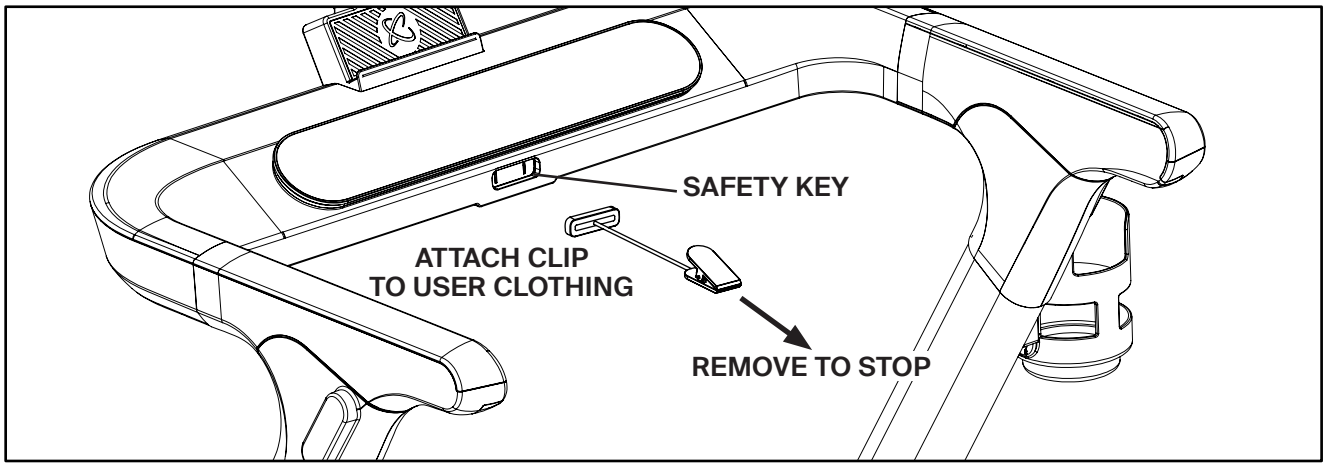

GROUNDING INSTRUCTIONS (FOR 110V MACHINES)

This product must be grounded. If it should malfunction or breakdown, grounding provides a path of least resistance for electric current to reduce the risk of electric shock. This treadmill is equipped with a cord having an equipment-grounding conductor and a grounding plug. The plug must be plugged into an appropriate outlet that is properly installed and grounded in accordance with all local codes and ordinances.

DANGER

Improper connection of the equipment-grounding conductor can result in a risk of electric shock. Check with a qualified electrician or serviceman if you are in doubt as to whether the product is properly grounded. Do not modify the plug provided with the treadmill, if it will not fit the outlet, have a proper outlet installed by a qualified electrician.

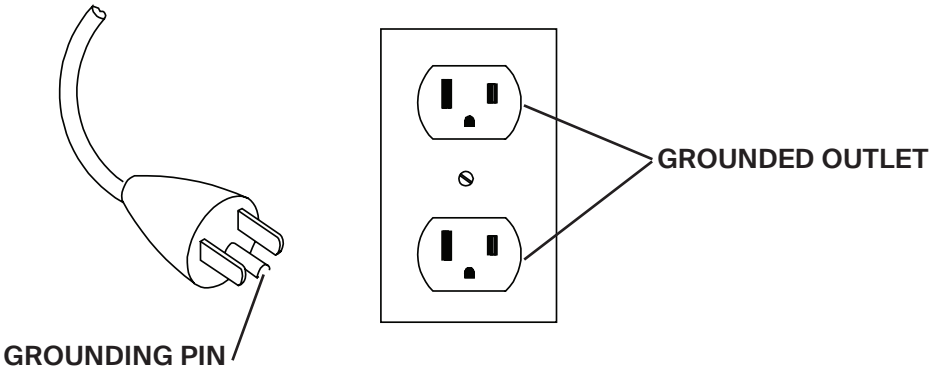

This treadmill is intended for use on a nominal 100-120V circuit and has a grounding plug that looks like the plug illustrated above. Make sure the treadmill is connected to an outlet that has the same configuration as the plug. **No extension cord or adapter should be used for this treadmill.**

POWER REQUIREMENTS (FOR 110V MACHINES)

WARNING

1. This treadmill requires a power source of 15 Amps (100 - 120V) in order to properly operate. For your safety, as well as the safety of others, please verify that the power source is correct before plugging in the treadmill. Any power source above or below this grade could cause significant damage to the treadmill and or user.
2. Never use a ground fault circuit interrupt (GFCI) wall outlet with this treadmill. Route the power cord away from any moving part of the treadmill, including the elevation mechanism and transport wheels.
3. Never operate the treadmill using a generator or UPS power supply.
4. Never remove any cover without first disconnecting AC power.

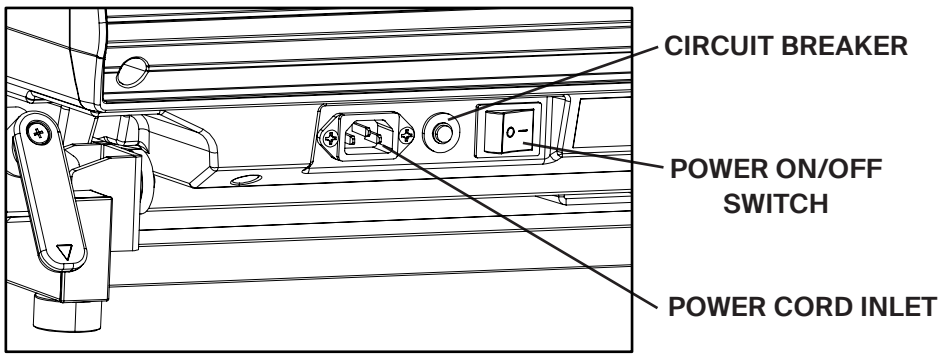

GROUNDING INSTRUCTIONS (FOR 220V MACHINES)

This product must be grounded. If it should malfunction or breakdown, grounding provides a path of least resistance for electric current to reduce the risk of electric shock. This treadmill is equipped with a cord having an equipment-grounding conductor and a grounding plug. The plug must be plugged into an appropriate outlet that is properly installed and grounded in accordance with all local codes and ordinances.

DANGER

Improper connection of the equipment-grounding conductor can result in a risk of electric shock. Check with a qualified electrician or serviceman if you are in doubt as to whether the product is properly grounded. Do not modify the plug provided with the treadmill, if it will not fit the outlet, have a proper outlet installed by a qualified electrician.

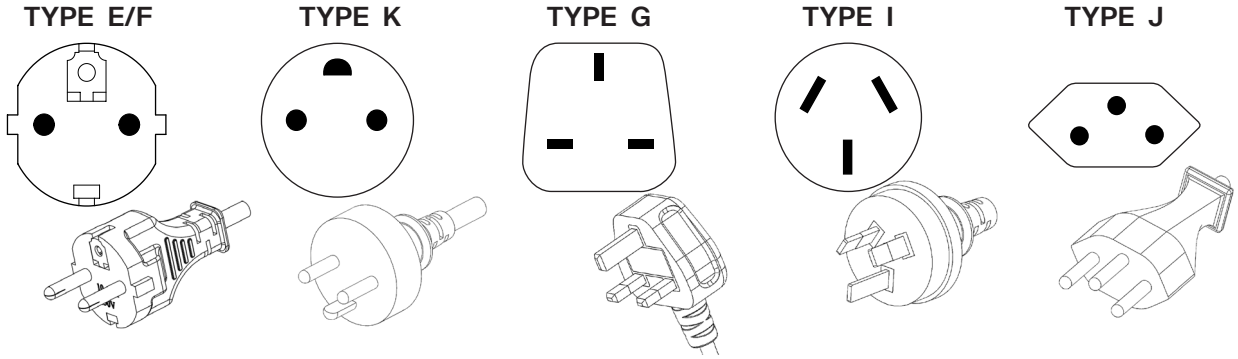

This treadmill is intended for use on a nominal 220V circuit and has a plug that looks like one of the plugs illustrated above (depending on your region). Make sure the treadmill is connected to an outlet have the same configuration as the plug. No extension cord or adapter should be used for this treadmill.

POWER REQUIREMENTS (FOR 220V MACHINES)

WARNING

1. This treadmill requires a power source of 10 Amps (220V) in order to properly operate. For your safety, as well as the safety of others, please verify that the power source is correct before plugging in the treadmill. Any power source above or below this grade could cause significant damage to the treadmill and or user.
2. Never use a ground fault circuit interrupt (GFCI) wall outlet with this treadmill. Route the power cord away from any moving part of the treadmill, including the elevation mechanism and transport wheels.
3. Never operate the treadmill using a generator or UPS power supply.
4. Never remove any cover without first disconnecting AC power.

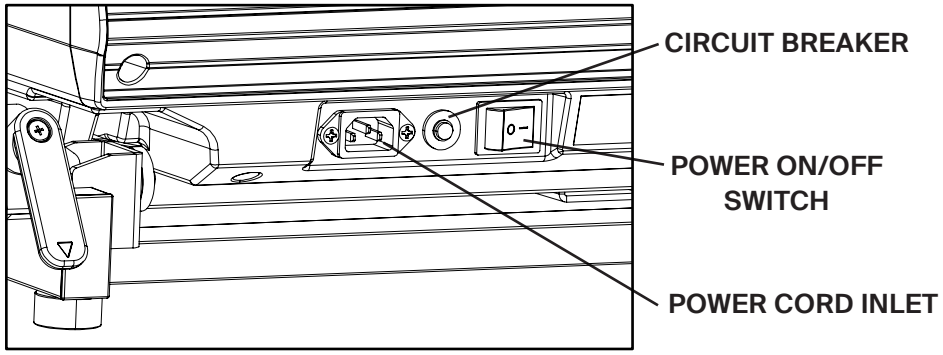

WARNING AND SERIAL NUMBER LABELS

WARNING
AVERTISSEMENT
ADVERTENCIA

The possibility of serious injuries or death may occur if caution is not used. Ensure safety by following these guidelines:

La prudence est de mise, sans quoi des blessures graves ou même la mort peuvent survenir :

Si no se actúa con precaución, pueden producirse lesiones graves o, incluso, la muerte. Para su seguridad, siga estas instrucciones:

Consult a physician before using any exercise equipment.
Consulter un médecin avant d'utiliser un appareil d'exercice.
Consulte con un médico antes de usar cualquier equipo de ejercicio.

Prior to use, read and understand the Owner's Manual, including all warnings.
Avant d'utiliser l'appareil, lire et comprendre le mode d'emploi, y compris tous les avertissements.
Lea atentamente el manual del propietario, incluso las advertencias, antes del uso.

Keep children and pets away from this equipment at all times; it is not intended for use by anyone under 14 years of age.
Tenir les enfants et les animaux à l'écart de l'appareil en tout temps; ce dernier n'est pas destiné à des personnes de moins de 14 ans.
Siempre mantenga alejados a los niños y las mascotas. El equipo no debe ser usado por personas menores de 14 años.

Disconnect the power cord and store the emergency key separately when not in use.
Débrancher le cordon d'alimentation et ranger la clé d'urgence séparément lorsque l'appareil ne sert pas.
Desenchufe el cable y almacene la llave de emergencia por separado cuando la máquina no esté en uso.

Stand only on side rails when starting or stopping.
Se tenir sur les rails latéraux seulement au démarrage ou à l'arrêt.
Siempre ponga los pies en los carriles laterales antes de encender o parar la cinta de correr.

Replace any "Caution," "Warning," or "Danger" label that is illegible, damaged, or missing.
Remplacer toute étiquette « Attention », « Avertissement » ou « Danger » illisible, endommagée ou manquante.
Reemplace cualquier etiqueta de advertencia («Caution», «Warning» o «Danger») que esté dañada, faltando o que sea ilegible.

Hold handrails to prevent falls and always wear the safety clip.
Tenir les mains courantes pour éviter les chutes et porter la pince de sureté en tout temps.
Agarre el pasamanos para evitar una caída y siempre sujete el clip del interruptor de seguridad en su ropa.

Stop if feeling faint, dizzy, or short of breath.
S'arrêter en cas de faiblesse, d'étourdissement ou d'essoufflement.
Deje de correr si siente desmayo, mareo o falta de aire.

Avoid overexertion to prevent injury or death.
Pour prévenir les blessures ou la mort, éviter les efforts excessifs.
Para evitar lesiones y hasta la muerte, no haga un esfuerzo excesivo.

80188-V2024-09-09

⚠ WARNING / AVERTISSEMENT / ADVERTENCIA

Maximum User Weight
Poids utilisateur maximal
Peso máximo de usuario

136 kg / 300 lb

80193-V2024-09-09

⚠ WARNING / AVERTISSEMENT / ADVERTENCIA

Heart rate monitor may be inaccurate. Stop immediately if you feel faint.
Le moniteur de fréquence cardiaque peut être imprécis. En cas de malaise, arrêter immédiatement.
Se puede que los datos del monitor de frecuencia cardíaca sean incorrectos. De sentirse mareado, deténgase de inmediato.

80182-V2024-09-09

⚠ WARNING / AVERTISSEMENT / ADVERTENCIA

Attach the safety clip to your clothing during use.
Attacher la pince de sureté à ses vêtements pendant l'utilisation.
Fije el clip del interruptor a su prenda durante el uso.

80183-V2024-09-09

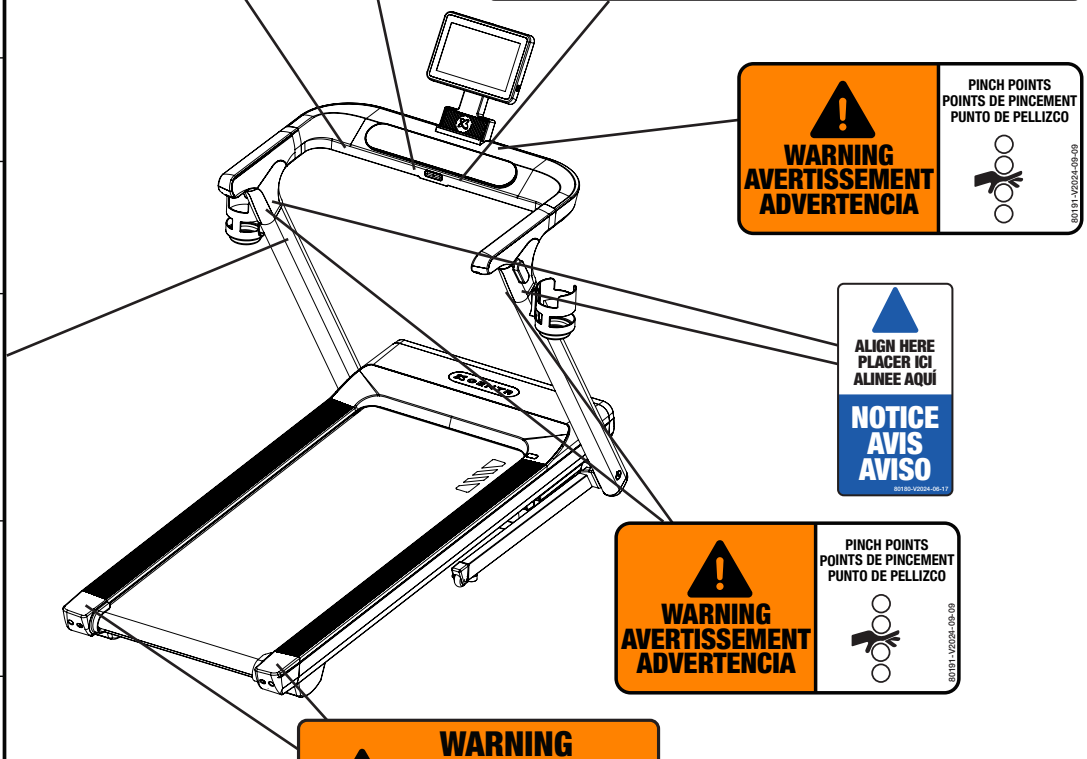

WARNING
AVERTISSEMENT
ADVERTENCIA

PINCH POINTS
POINTS DE PINCEMENT
PUNTO DE PELLIZCO

80191-V2024-09-09

ALIGN HERE
PLACER ICI
ALINEE AQUÍ

NOTICE
AVIS
AVISO

80190-V2024-06-17

WARNING
AVERTISSEMENT
ADVERTENCIA

PINCH POINTS
POINTS DE PINCEMENT
PUNTO DE PELLIZCO

80191-V2024-09-09

WARNING
AVERTISSEMENT
ADVERTENCIA

Risk of personal injury. Children under 14 should not use this machine.
Risque de blessure. Les enfants de moins de 14 ans ne devraient pas utiliser l'appareil.
Riesgo de lesiones personales. Los niños no deben usar la máquina.

80075-V2024-09-09

Keep hands away from the rear end cap and roller.
Tenir les mains éloignées de l'embout arrière et du rouleau.
Mantenga las manos lejos de la parte trasera y la cinta.

Do not stand on rear end caps. Always wear shoes while using the treadmill.
Ne pas monter sur les embouts arrière. Toujours porter des chaussures lors de l'utilisation du tapis roulant.
No se pare sobre los extremos. Siempre use zapatos al correr sobre la cinta.

80184-V2024-09-09

RUNNING BELT ADJUSTMENT.
AJUSTEMENT DE LA BANDE DE COURSE.
AJUSTE DE LA CINTA DE CORRER.

LOOSEN
DESSERRER
AFLOJAR

TIGHTEN
SERRER
APRETAR

To adjust running belt use Allen Wrench.
Pour ajuster la bande de course, utiliser une clé hexagonale.
Use la llave hexagonal para ajustar la cinta de correr.

80217-V2024-09-09

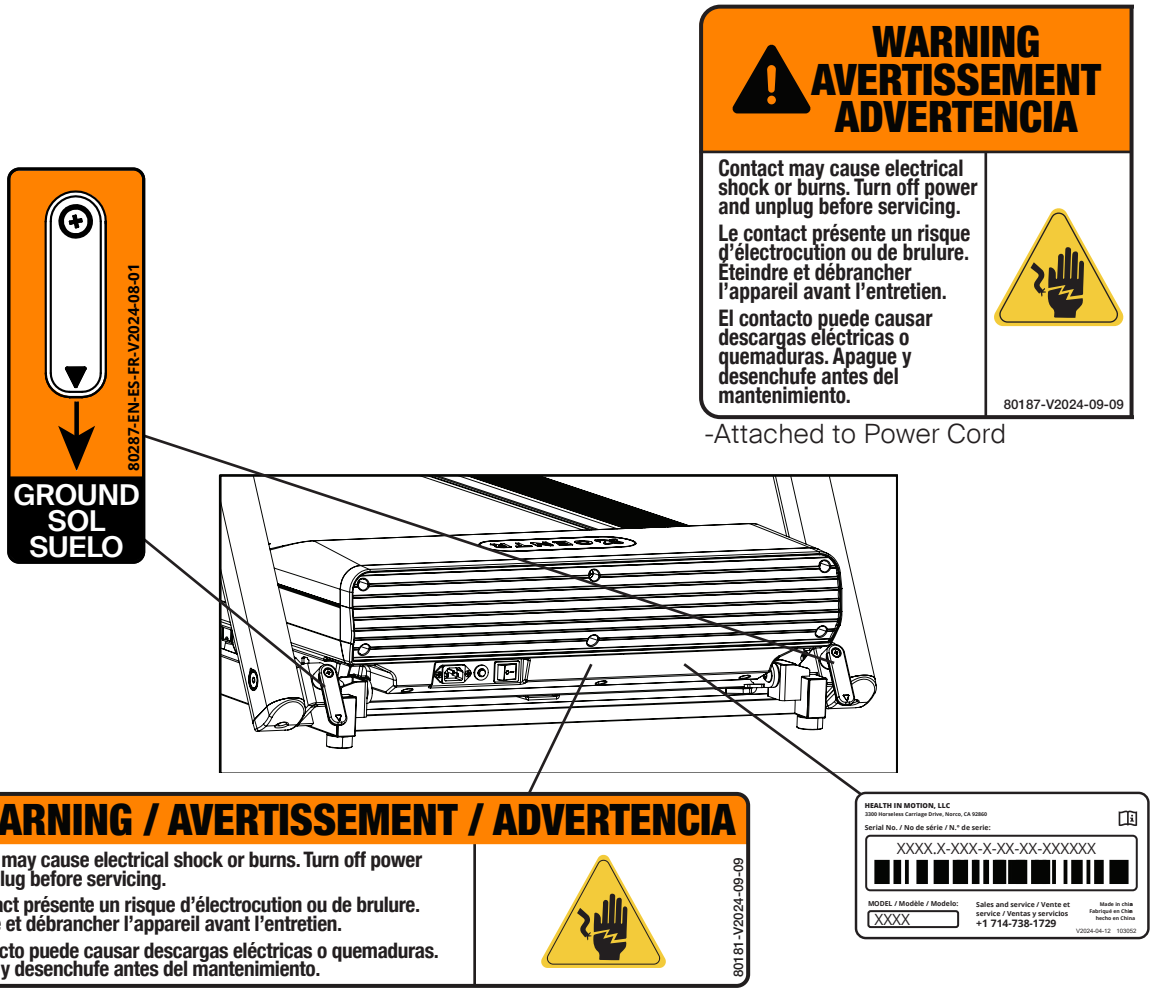
GROUND
SOL
SUELO
80287-EN-ES-FR-V2024-08-01
WARNING
AVERTISSEMENT
ADVERTENCIA
Contact may cause electrical shock or burns. Turn off power and unplug before servicing.
Le contact présente un risque d'électrocution ou de brulure. Éteindre et débrancher l'appareil avant l'entretien.
El contacto puede causar descargas eléctricas o quemaduras. Apague y desenchufe antes del mantenimiento.
80187-V2024-09-09
-Attached to Power Cord
WARNING / AVERTISSEMENT / ADVERTENCIA
Contact may cause electrical shock or burns. Turn off power and unplug before servicing.
Le contact présente un risque d'électrocution ou de brulure. Éteindre et débrancher l'appareil avant l'entretien.
El contacto puede causar descargas eléctricas o quemaduras. Apague y desenchufe antes del mantenimiento.
80181-V2024-09-09
HEALTH IN MOTION, LLC
Serial No. / No de série / N.° de serie:
XXXX.X-XXX-X-XX-XX-XXXXXX
MODEL / Modèle / Modelo:
XXXX
Sales and service / Vente et service / Ventas y servicios
+1 714-738-1729
Made in china
Fabriqué en Chine
hecho en China
V2024-04-12 103052
NOTICE
AVIS
AVISO
Gently press with your foot to release the lock and lower the deck.
Appuyer doucement avec le pied pour ouvrir le verrou et abaisser le plateau.
Presione suavemente con el pie para desbloquear y bajar la plataforma.
80185-V2024-09-09
WARNING
AVERTISSEMENT
ADVERTENCIA
STORE THE STRAP FOR FUTURE REPACKAGING
Keep the strap on when moving the treadmill in a non-assembled state. Do not lift the treadmill without securing the running deck and bottom frame with the strap. Failure to do so may result in injury.
CONSERVER LA SANGLE POUR LE FUTUR REEMBALLAGE
Utiliser la sangle pour déplacer le tapis roulant non monté. Pour éviter les blessures, fixer le plateau roulant et le cadre inférieur avec la sangle avant de soulever le tapis roulant.
CONSERVE LA CORREA PARA UN EMBALAJE FUTURO
No quite la correa cuando desplace la cinta de correr si no está montada. Para evitar lesiones, asegure la plataforma y el marco inferior con la correa antes de levantar la cinta de correr.
80201-V2024-09-09
-Attached to Packing Strap
CAUTION / ATTENTION / CUIDADO
Keep hands and feet away while treadmill is running.
Tenir les pieds et les mains éloignés lorsque le tapis roulant est en marche.
Mantenga las manos y los pies alejados al usar la cinta de correr.
80186-V2024-09-09

HARDWARE PACK (NOT TO SCALE)

ITM. / ART. 1857443
HARDWARE

STEP 4

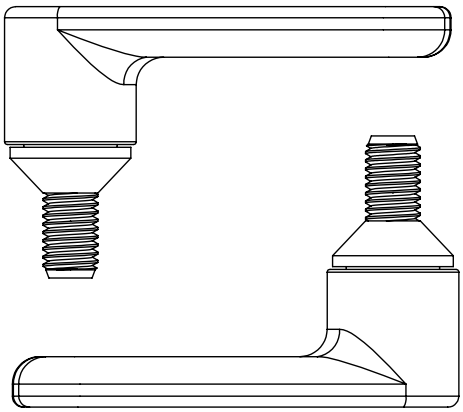

2x Large Adjustable Clamping Handle, M10x1.5mm (1)

STEP 5

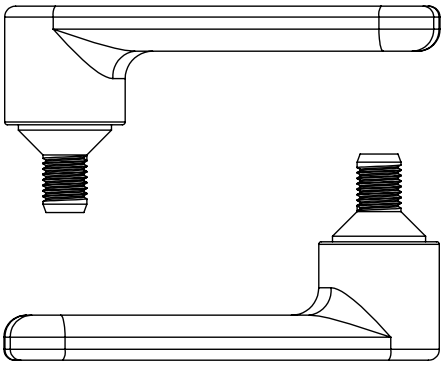

2x Small Adjustable Clamping Handle, M8x1.25mm (2)

STEP 9

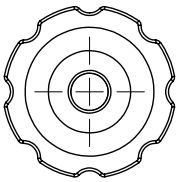

1 x Securing Knob, M8 (3)



1 x Allen Wrench, #5

80225-V2024-07-15

ASSEMBLY

WARNING

Do not remove the **Packing Strap** until instructed. Do not lift the treadmill without the **Packing Strap** securing the **Running Deck** to the **Base Frame Assembly**. Failure to do so may result in injury or damage to property.

NOTE: It is recommended to have at least 2 people for unboxing and assembling the treadmill.

STEP 1 - Remove the treadmill from the carton and place it on flat ground in the intended workout area. Remove the Packing Strap that secures the **Running Deck** to the **Base Frame Assembly**. Save the **Packing Strap** for future use.

WARNING

The treadmill may be moved by two or more people depending on their physical abilities and capacities. Make sure that you and the others are all physically fit and able to move the treadmill safely.

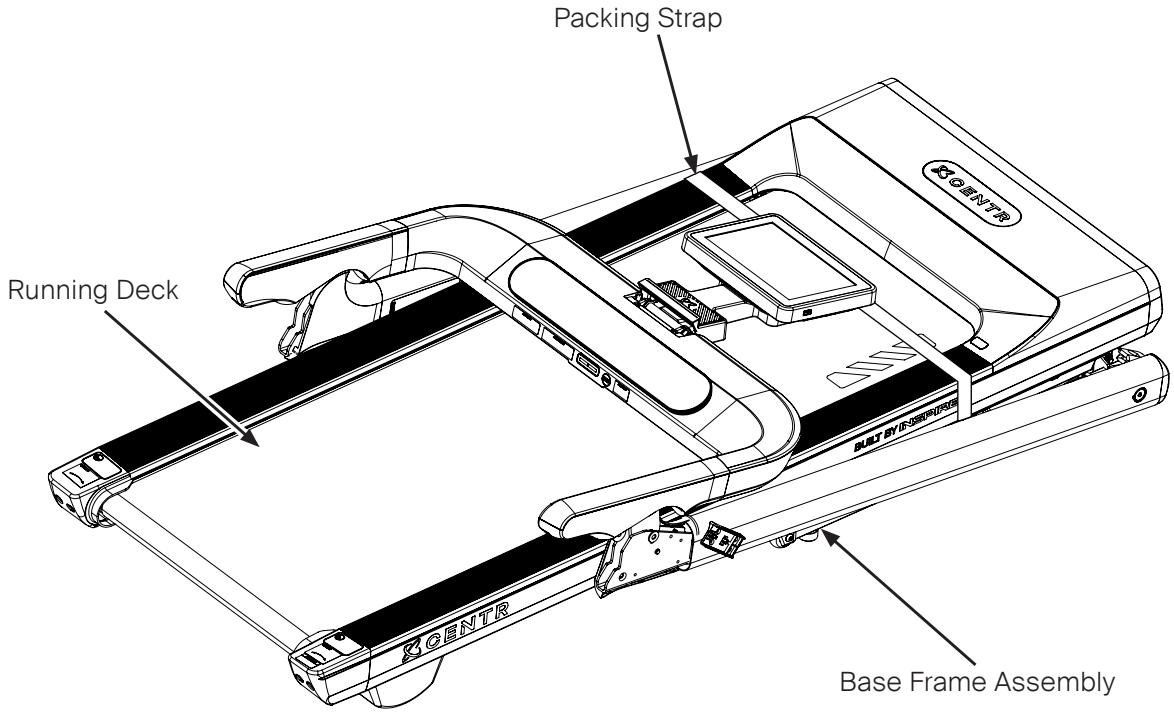

STEP 2 - Insert the **Safety Key** into the **Console and Handrail Assembly**, and connect the **Power Cord** to a grounded outlet and the treadmill. Turn on the treadmill with the **Power On/Off Switch**. Allow the **Touchscreen Console** to fully activate, displaying the Log In screen (approximately 40 seconds).

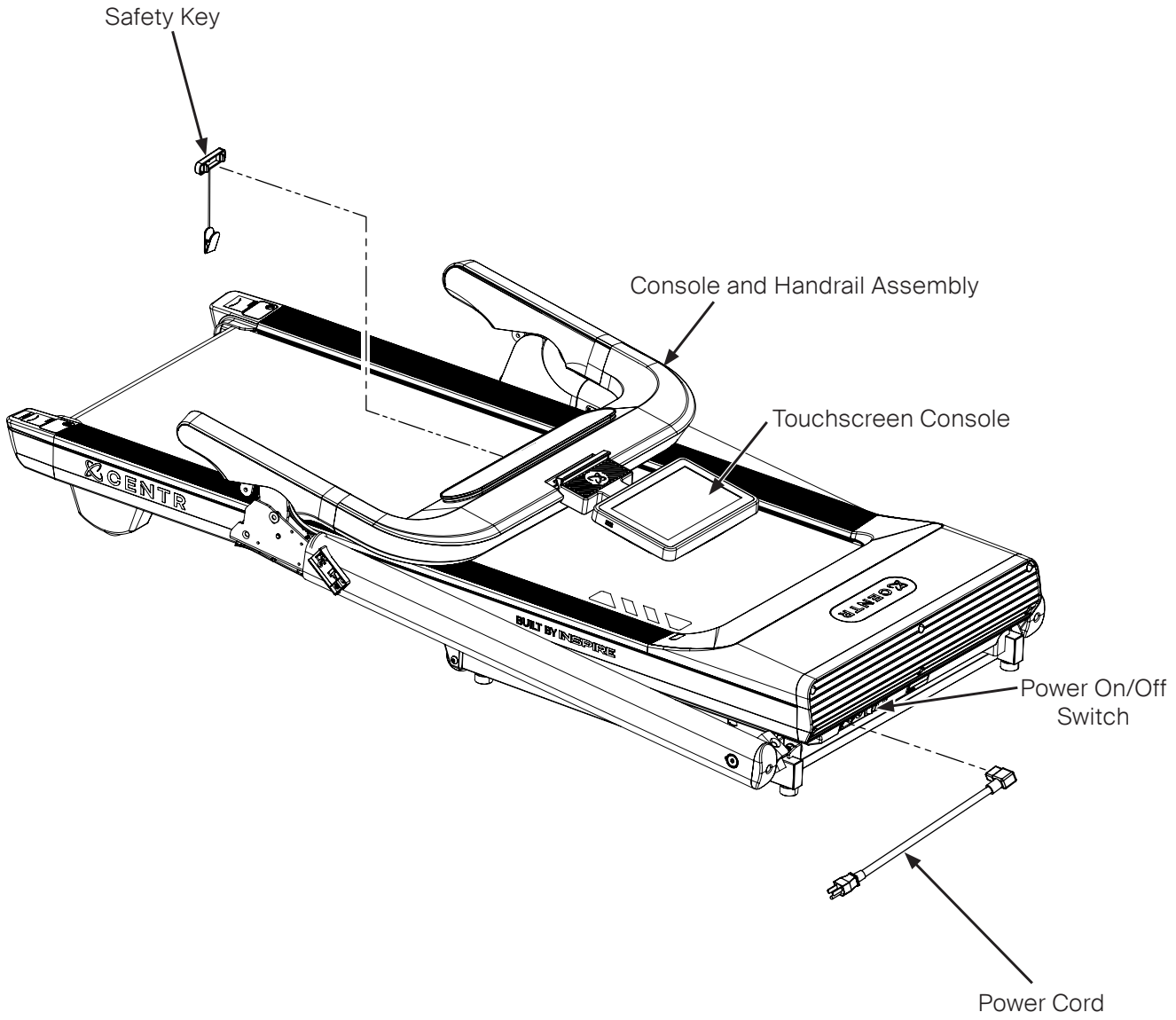

STEP 3 - With the **Packing Strap** removed, push and hold down the **INCLINE and SPEED + Buttons** together for 2 seconds. The display will show “Inc” and “00”.

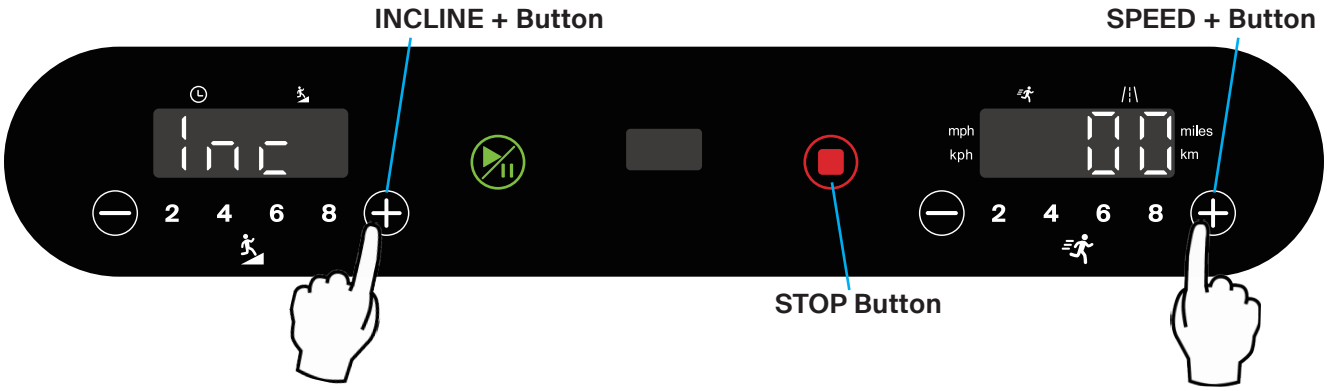

Tap the **INCLINE + Button** twelve times. The display will show “Inc” and “12”. The **Running Deck** will raise until it reaches the maximum incline. To stop the deck from raising, push the STOP Button.

WARNING

Be sure the area is clear around and on the machine. Keep hands away from all moving parts.

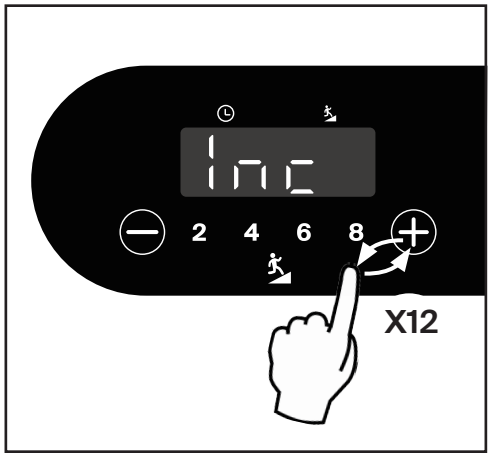

STEP 4 - Lift the **Left and Right Uprights** until the holes at the bottom are aligned on the **Base Frame Assembly**, and install the two **Large Adjustable Clamping Handles** (1). DO NOT FULLY TIGHTEN THE HANDLES UNTIL INSTRUCTED.

WARNING

The **Console and Handrail Assembly** is loose and can pivot down onto the **Uprights**. Keep fingers away from the ends of the Upright tubes. A second person to safely hold the **Uprights** during this step is recommended. The **Mast** is also loose and can pivot onto the **Console and Handrail Assembly**. Do not grasp the **Mast** or **Touchscreen Console** to lift the **Left and Right Uprights**.

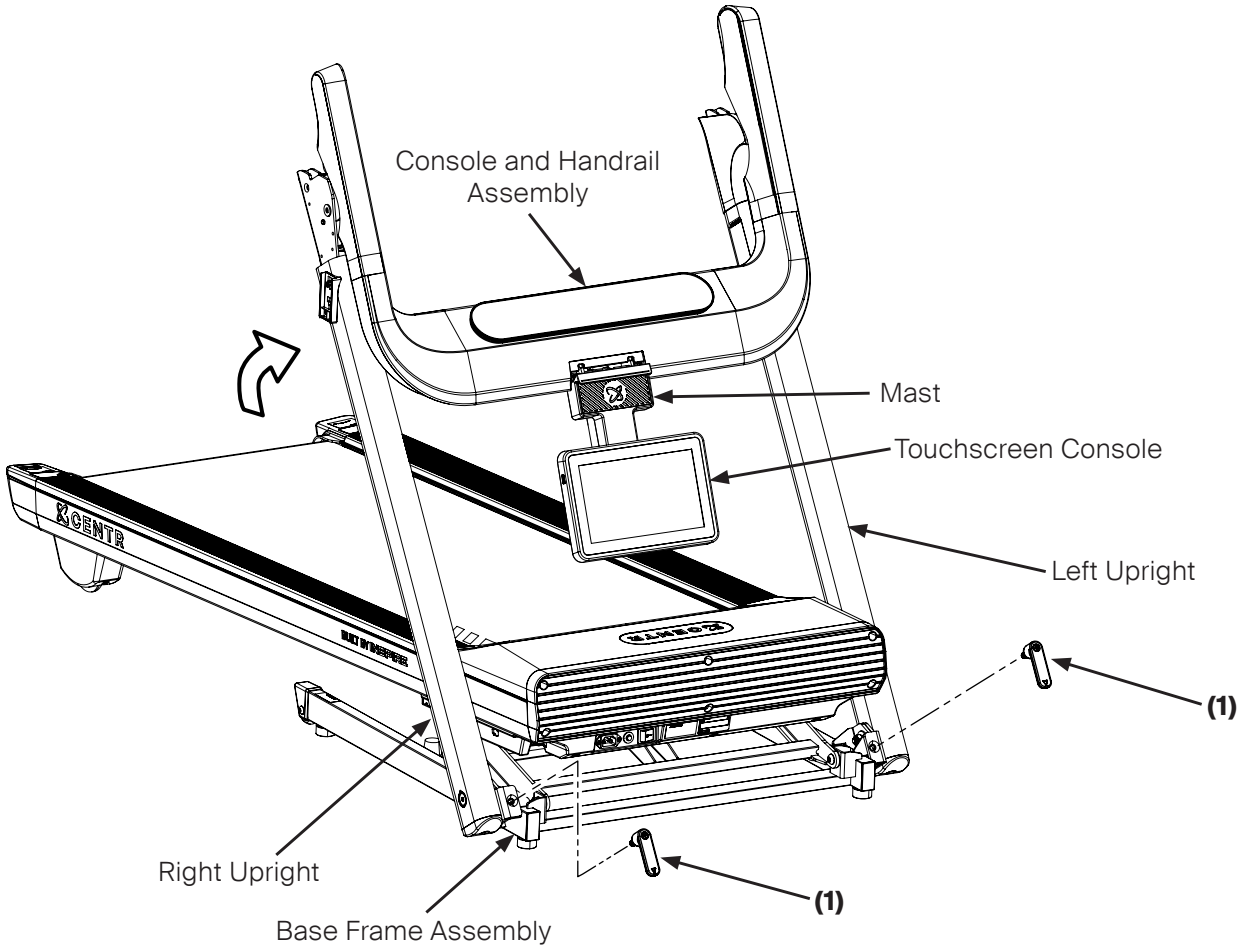

HARDWARE REQUIRED:

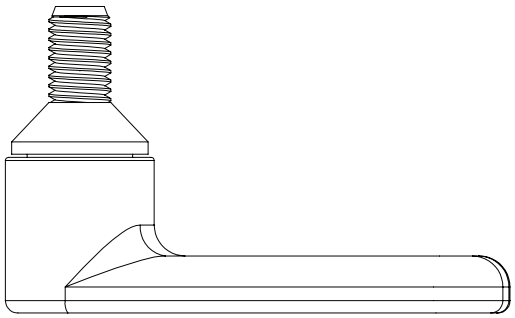

(1) Large Adjustable Clamping Handle **2pc**.

STEP 5 - Pivot the **Console and Handrail Assembly** until the holes align, and install the two **Small Adjustable Clamping Handles** (2). Tighten the **Adjustable Clamping Handles** (2) by hand. Adjust the handles to align with the arrow labels on the **Left and Right Uprights**. To adjust a handle pull it outward to disengage, rotate until it points at the arrow label, and then release the handle into the desired position.

WARNING

Keep fingers away from the ends of the **Upright** tubes when pivoting the **Console and Handrail Assembly**. A second person to safely hold the **Console and Handrail Assembly** during this step is recommended. Do not grasp the **Mast** or **Touchscreen Console** to lift the **Console and Handrail Assembly**.

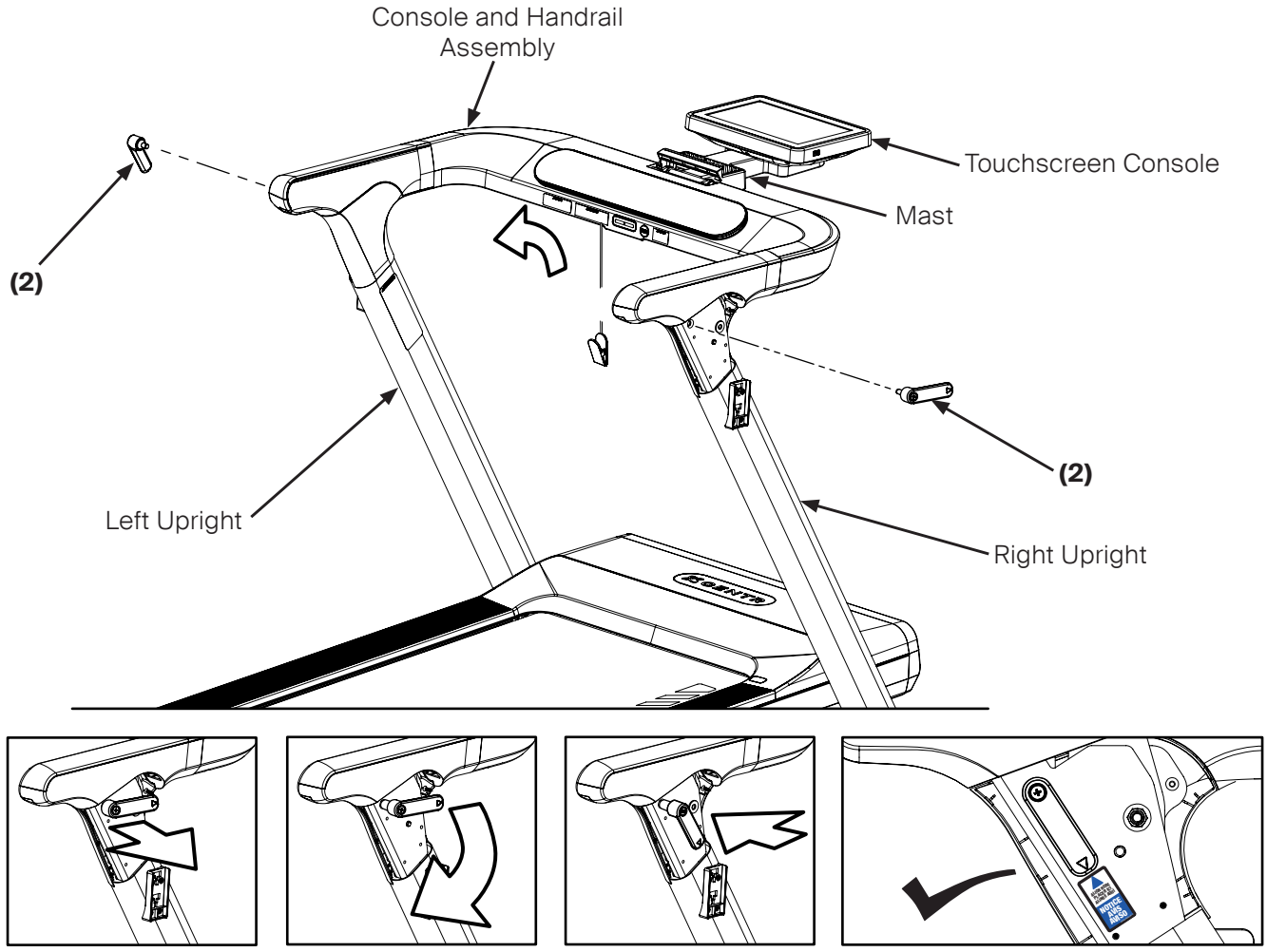

HARDWARE REQUIRED:

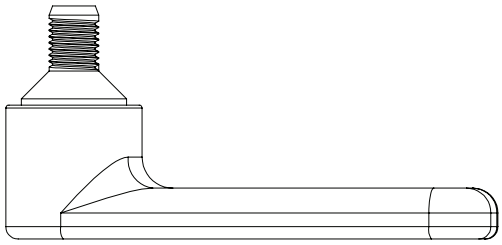

(2) Small Adjustable Clamping Handle **2pc**.

STEP 6 - Fully tighten the two **Large Adjustable Clamping Handles** (1) from STEP 4. Once the **Adjustable Clamping Handles** (1) have been fully tightened, inspect the positions of the handles. The handles need to point downward. To adjust a handle pull it outward to disengage, rotate until it points downward, and then release the handle into the desired position.

WARNING

The handles must point down toward the floor or damage to the machine may occur when the deck is lowered.

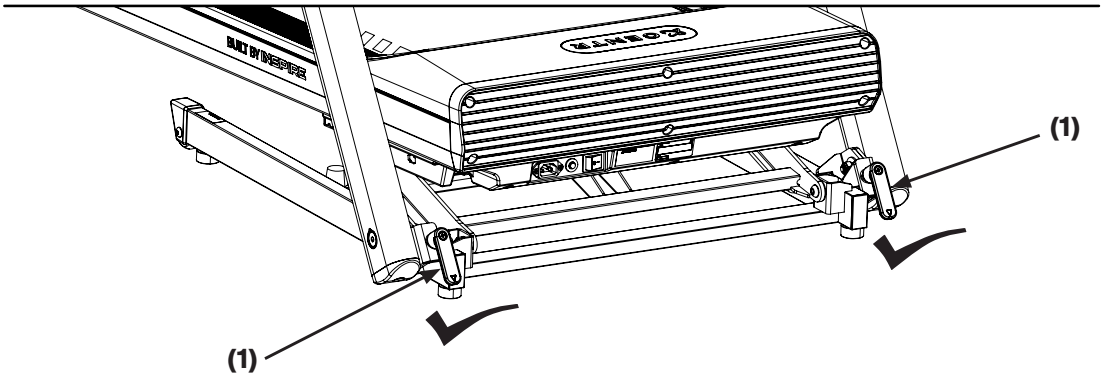

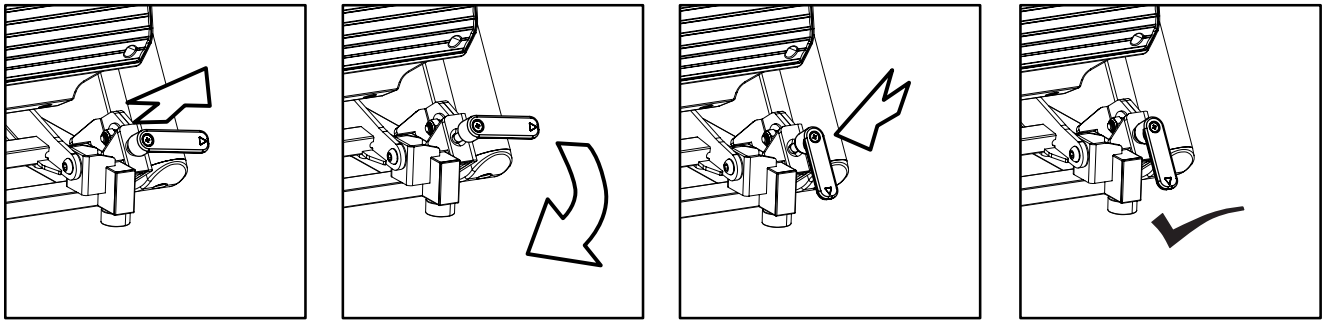

STEP 7 - The **Left and Right Outer Upright Covers** have two tabs along the top. Slide the tabs of the **Outer Upright Cove**r up into the **Console and Handrail Assembl**y, and then push into place.

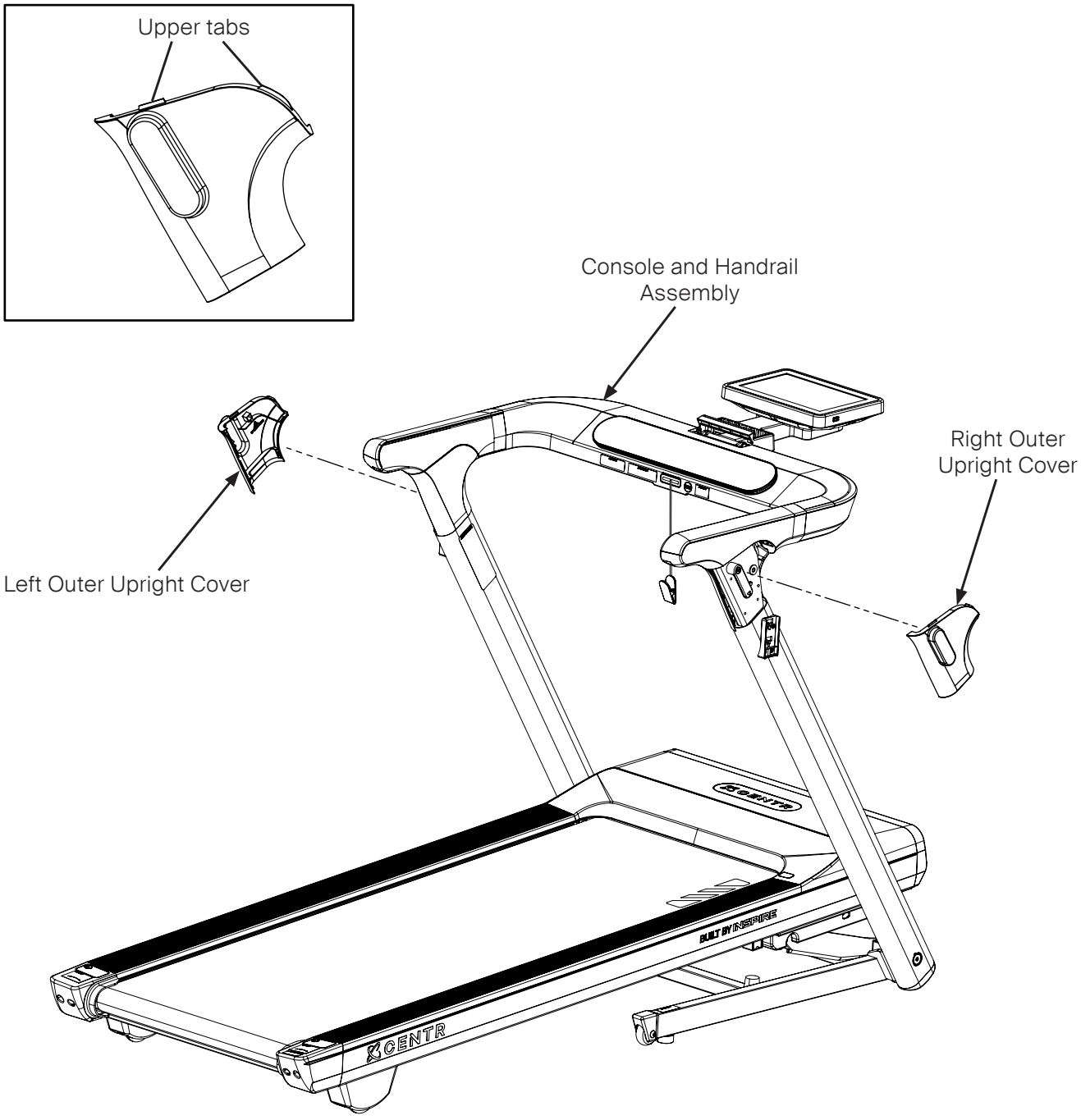

STEP 8 - Attach the **Water Bottle Holders** to the **Left and Right Uprights**.

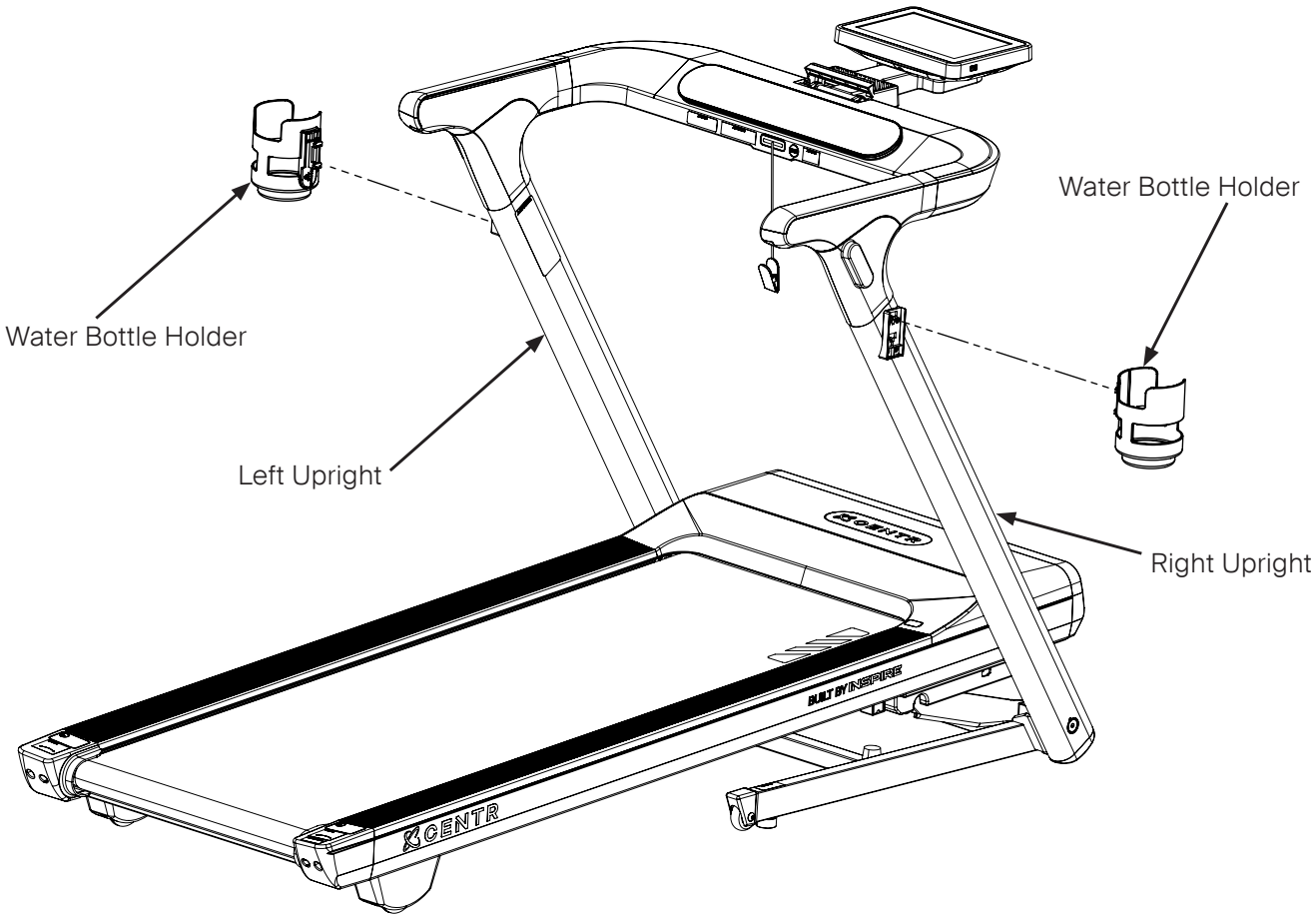

STEP 9 - Pivot the **Mast** with the **Touchscreen Console** upward, and secure the **Mast** to the **Console and Handrail Assembly** with the **Securing Knob** (3). Hold the **Mast** in place until the **Securing Knob** (3) is fully tightened.

WARNING

The **Mast** is loose and can pivot down onto the **Console and Handrail Assembly**. Keep fingers away from the base of the **Mast**. A second person to safely hold the **Mast** during this step is recommended.

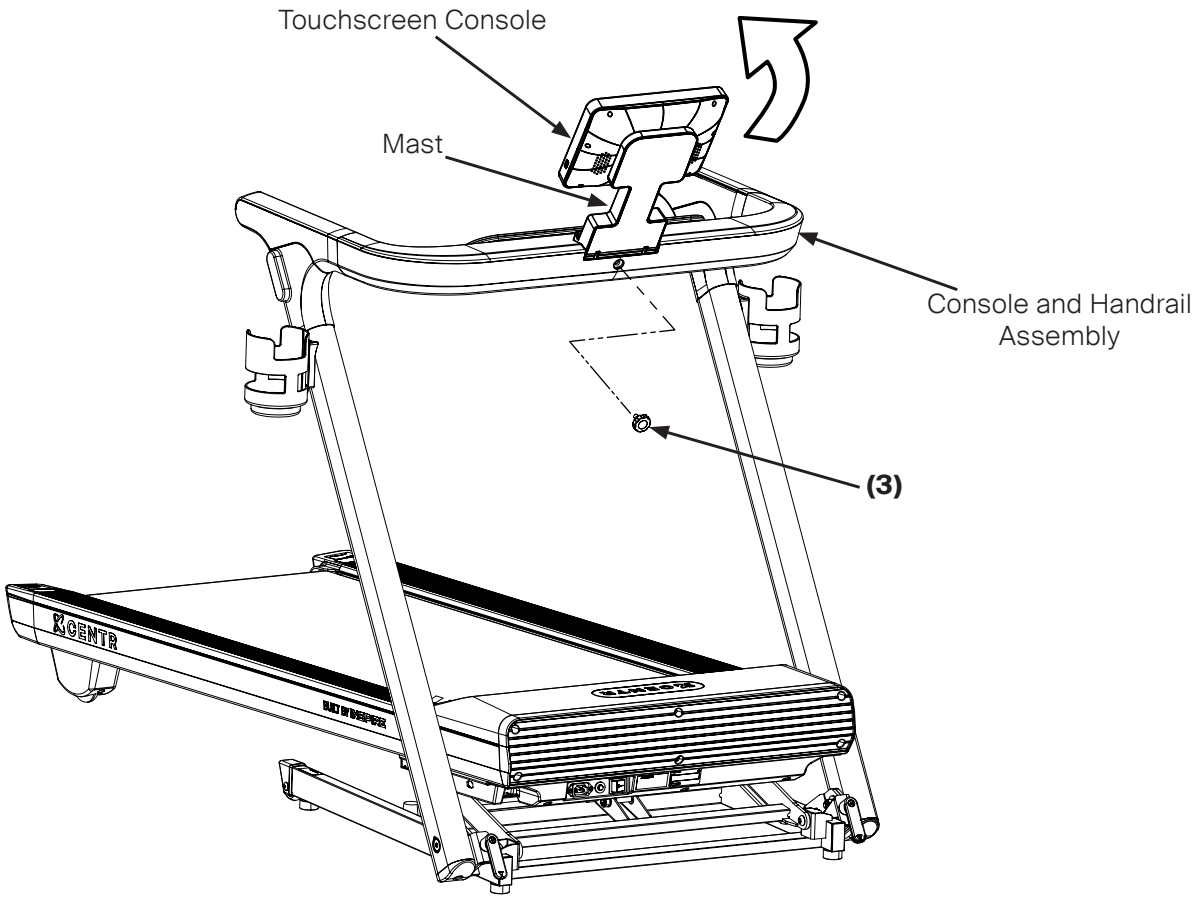

HARDWARE REQUIRED:

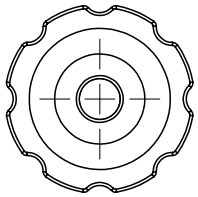

(3) Securing Knob **1pc**.

STEP 10 - Tap the **INCLINE - Button** twelve times. The **Running Deck** will lower until it reaches the minimum incline. The display will show “Inc” and “00”.

WARNING

Be sure that the area is clear beneath, around, and on the machine. Keep hands away from all moving parts. Be SURE that the **Adjustable Clamping Handles** (1) on the front of the machine point down toward the floor or damage to the machine may occur when the deck is lowered.

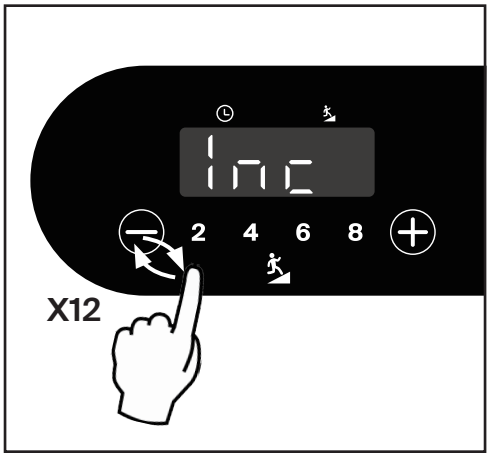

Then push and hold down the **INCLINE and SPEED - Buttons** together for 2 seconds. The display will stop showing “Inc” and “00”.

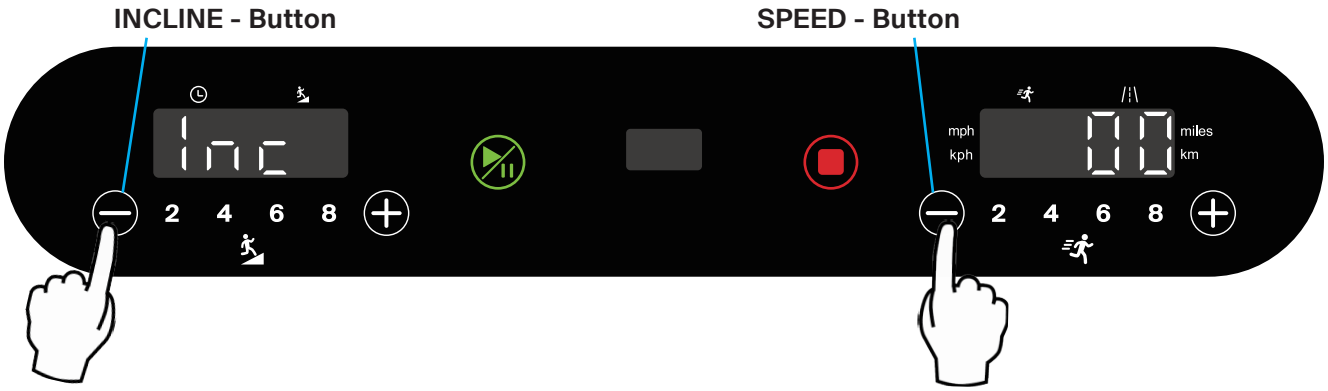

FEATURE OVERVIEW

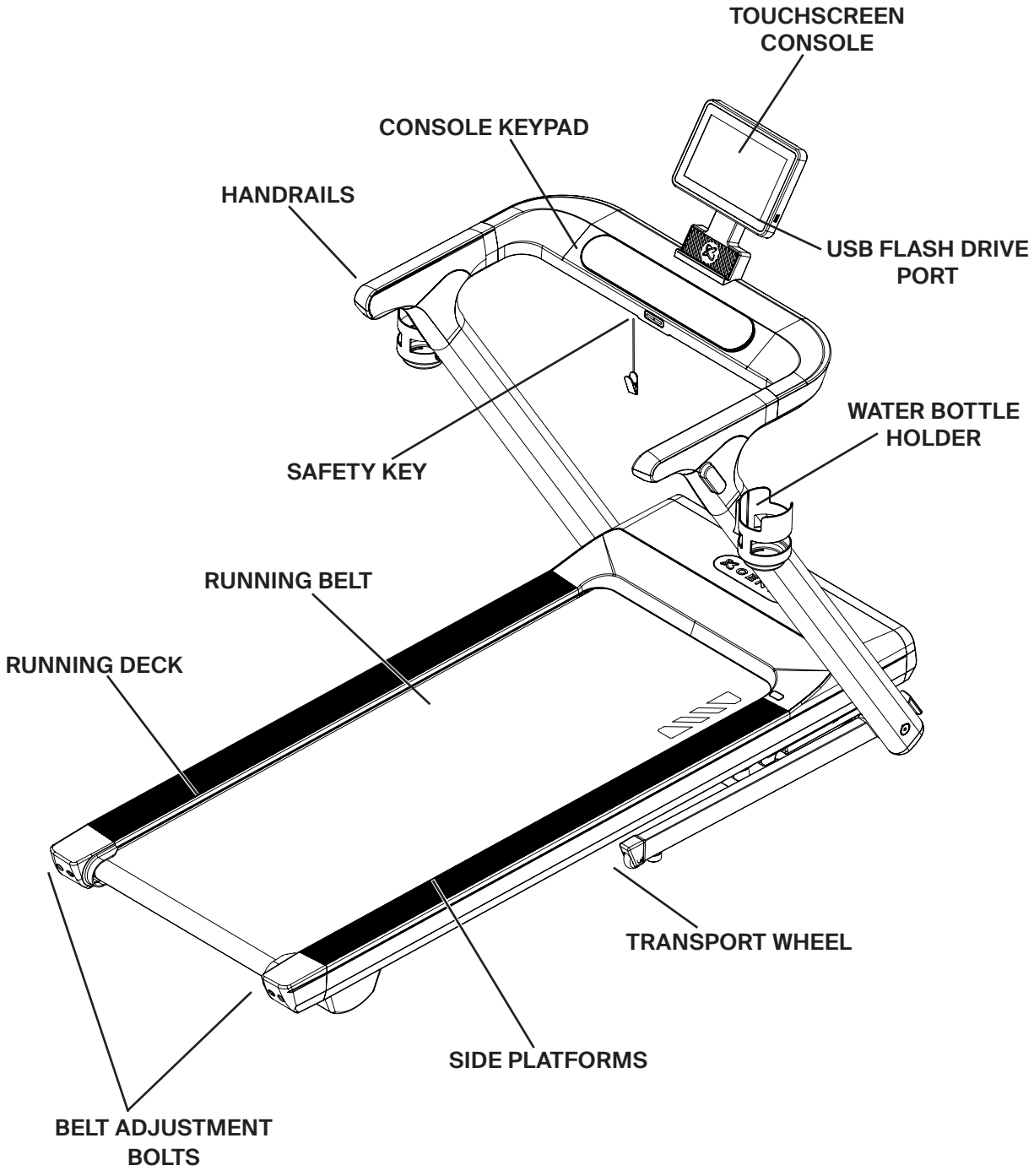

BEFORE YOU BEGIN

This treadmill is built for optimum safety. However, certain precautions apply whenever you operate a piece of exercise equipment.

WARNING

Before using this treadmill, all users must read, understand, and carefully follow all warnings, instructions, and procedures on the treadmill and in this User Manual. The user is required to perform a complete visual inspection, and test of the features and functions of the assembled treadmill prior to use.

CAUTION

1. To avoid injury, use extreme caution when stepping onto or off of a moving belt.
2. Changes in speed do not occur immediately. Set your desired speed using the adjustment keys on the console. The speed will increase gradually.
3. While on the treadmill, move with caution as distractions may cause you to lose balance and stray from walking in the center of the belt, which may result in serious injury.
4. The treadmill starts at very low speed. To begin use, hold onto the handrails and stand on the side platforms while it starts up, then step onto the belt once it's in motion.
5. Always hold the handrail when changing settings on the console.

CONSOLE OPERATION

TOUCHSCREEN CONSOLE OVERVIEW

The treadmill is equipped with a Touchscreen Console providing an additional level of interaction, user features and workouts.

The CENTR Touchscreen Console User Manual can be found online with the provided QR Code to assist with using the features and workout programs available on it.

80286-EN

CONSOLE KEYPAD OVERVIEW

NOTE: The console control keys are precisely set and require very little finger pressure to use. To avoid damaging these keys, do not use excessive pressure when operating these controls. For best performance of the touch buttons, regularly clean the console surface.

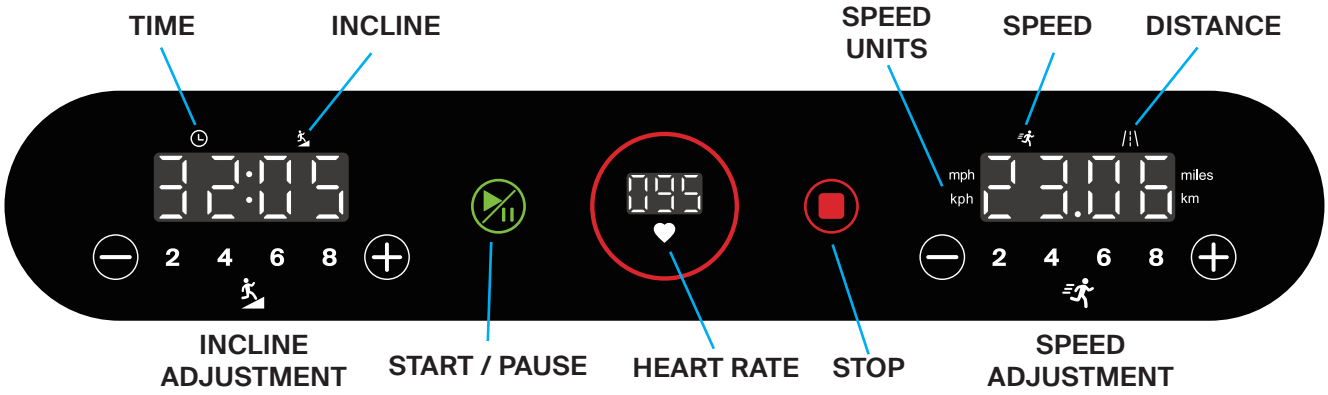

START / PAUSE: Push this button to START a workout. The console will do a 4 second countdown and then the belt will begin to move. When the belt is moving, push the button again to PAUSE your workout. When in PAUSE, both SPEED and INCLINE will change to 0. Press again to exit PAUSE and resume your workout. Speed and incline will gradually return to the levels when the workout was paused.

STOP: Push this button at anytime to STOP the workout. If in PAUSE state, push the STOP button to end a paused workout and enter STANDBY state.

INCLINE ADJUSTMENT: Press 2, 4, 6, or 8 INCLINE preset button to directly move to that INCLINE running grade. Use the +/- buttons to adjust the INCLINE between 0 and 12. Hold either + or - key for 0.5 seconds to quickly change the INCLINE.

SPEED ADJUSTMENT: Press 2, 4, 6, or 8 SPEED preset button to directly move to that SPEED. Use the +/- buttons to adjust the SPEED between 1mph / 1.6kph and 10mph / 16kph. Hold either + or - key for 0.5 seconds to quickly change the SPEED.

The default speed and distance units are mph / miles, but can be set to kph / km. To change the units of measurement with the Touchscreen Console, tap on SETTING (lower right corner of the display) from the Standby state. Then tap on Machine Setting, and Unit. The option for Imperial or Metric is displayed. Tap on the desired unit of measurement, and then tap the Back icon to exit to the Standby state.



Back icon

CONSOLE MODES

INITIAL POWER ON: After the On/Off power switch is turned on, the Touchscreen Console will start up and show the Log In screen after approximately 40 seconds. All segments and icons on the Console Keypad will also light up for 2 seconds, then it will enter STANDBY state.

STANDBY (IDLE): INCLINE and SPEED will both be set to 0 and the Heart Rate (HR) circle will blink yellow for 1 minute as it searches for a HR device. If after 5 minutes of no activity, the backlight will flash Green for 30 seconds. After 5 more minutes of no activity, the backlight will flash Green for 30 seconds before entering SLEEP state, and all Console Keypad lights will turn off. If Sleep mode is active on the Touchscreen Console, it will enter SLEEP state after 30 minutes of no activity.

RUNNING: When in STANDBY state, press the START / PAUSE button to begin a Quick Start Workout, or select a workout program from the Touchscreen Console. The console will do a 4 second countdown and then the belt will begin to move at the minimum SPEED of 1.0 mph. Press the PAUSE button to enter PAUSE state, and the STOP button to end your workout.

NOTE: After 1 minute, if the belt is moving and the motor does not detect a user on the belt, it will automatically exit RUNNING mode and enter STANDBY.

The light around the perimeter of the Console Keypad will show 3 different colors based on the current speed of the treadmill (see images below).



GREEN: 1.0 - 3.7mph



ORANGE: 3.8 - 6.2mph



RED: 6.3 - 10.0mph

PAUSE: In PAUSE state, the INCLINE and SPEED with both be set to 0. Push START / PAUSE button to resume workout, and STOP to end your workout and enter STANDBY state. The workout will resume, and

speed and incline will gradually return to the levels when the workout was paused.

SLEEP: This state is to save power when not using the treadmill. Press any button on the Console Keypad to exit SLEEP state and return to STANDBY state.

HEART RATE DEVICE

This console will connect to the optional HR chest strap or any other similar device that uses BLE protocol. When first turning on the treadmill, the circle around the HR metric will blink orange for 1 minute while it searches for a signal. If at anytime a signal is found, the Heart Icon will turn on, the Heart BPM will be shown, and the circle will display a different color based on the heart rate running formula ((220 - age) x %), with the default age set to 20.

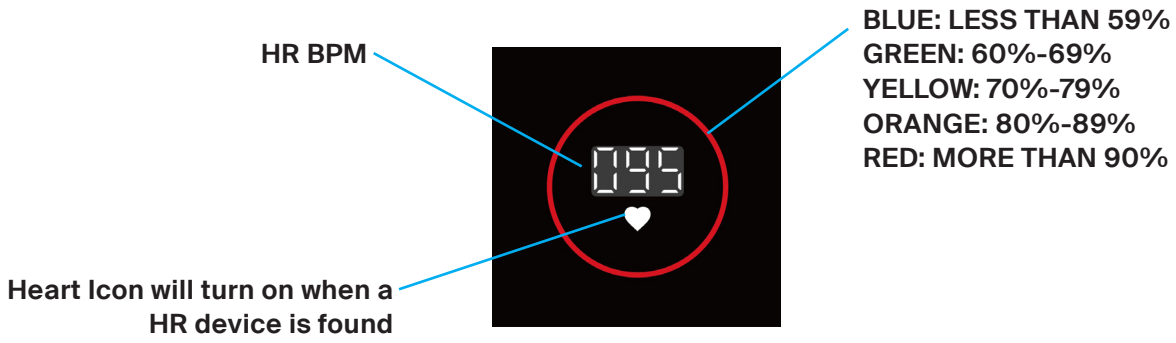

FOLDING AND MOVING INSTRUCTIONS

This treadmill is designed to be folded when not in use, to save floor space and allow for easy transport.

FOLDING

Before folding the treadmill, ensure that the Incline is set to 0, the Power switch is in Off position, and the power cord is removed from the outlet and machine.

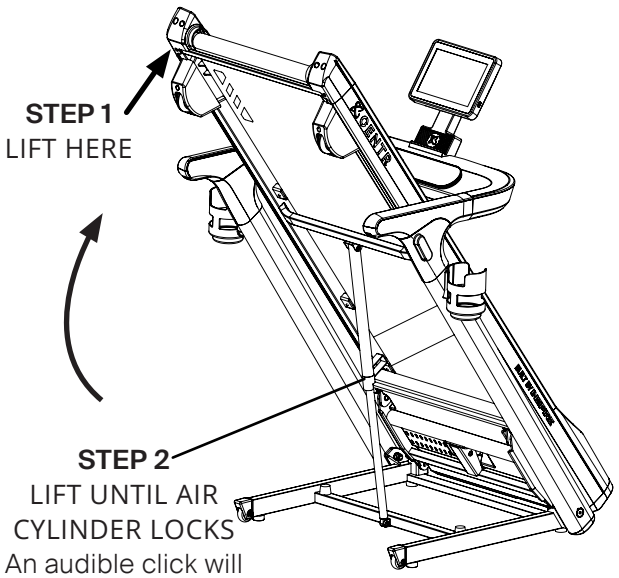

UNFOLDING

Before unfolding the treadmill, ensure that the floor space under the treadmill is free of any objects.

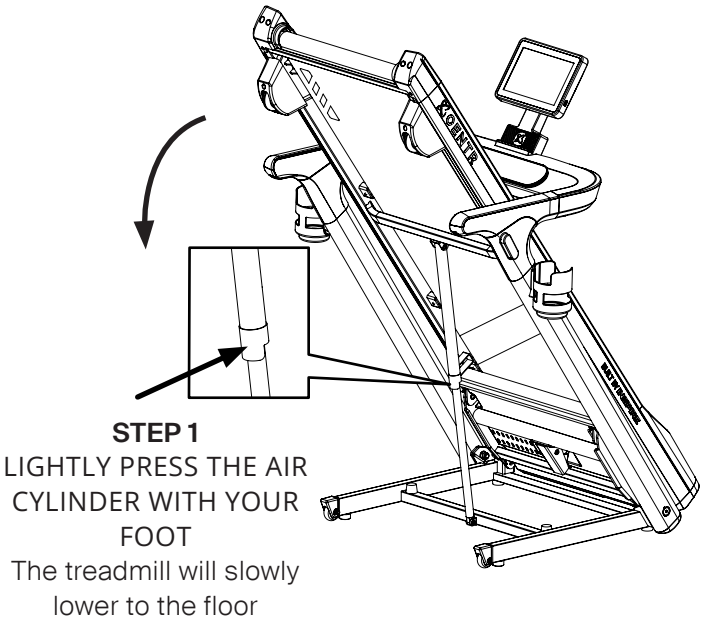

MOVING

Before moving the treadmill, please ensure that it has been properly folded, and that power cord is disconnected.

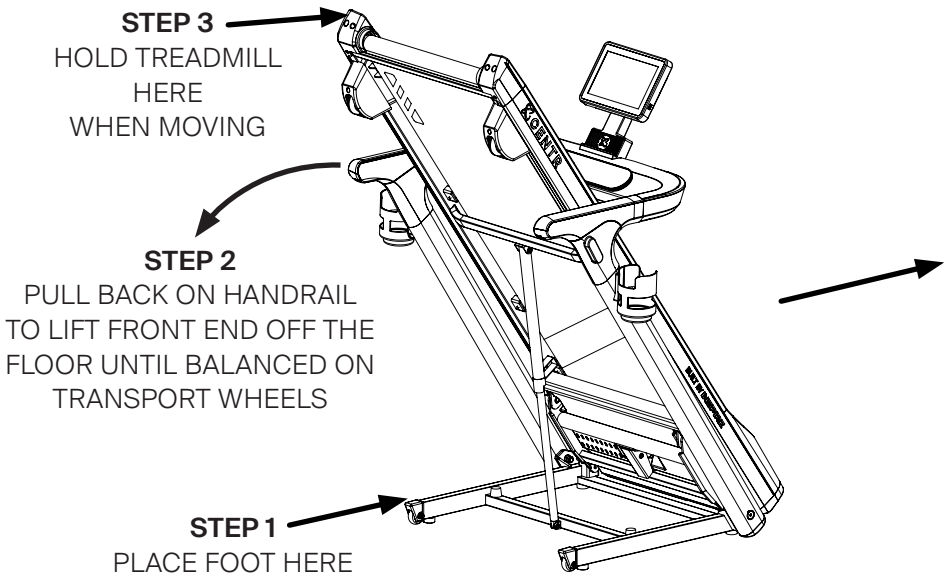

TRANSPORTING

When needing to transport the treadmill into a different room or location, it may need to be tilted onto a side. The treadmill must be broken down to the originally shipped configuration by reversing the assembly process, and the Packing Strap that shipped with the treadmill MUST be installed before it can be tilted onto a side and transported.

WARNING

Do not tilt the treadmill onto a side without the Packing Strap securing the Running Deck to the Base Frame Assembly. Failure to do so may result in injury or damage to property.

During disassembly, be aware that the Mast, the Console and Handrail Assembly and the Uprights will freely pivot once the Securing Knob and Adjustable Clamping Handles are removed. Be prepared to support the weight of the Console and Handrail Assembly and Uprights, and safely pivot them down to the Deck. Keep fingers away from the ends of the Upright tubes and the Deck. Do not grasp the Mast or Touchscreen Console to lower the Uprights. A second person is encouraged to assist with this process. Once safely lowered, be sure to securely install the Packing Strap.

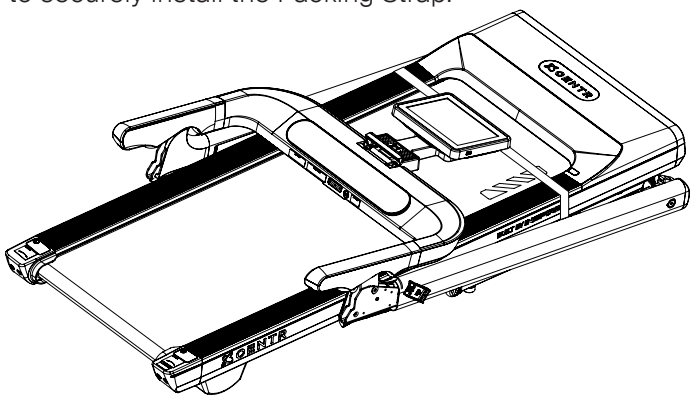

MAINTENANCE AND CARE

General cleaning will help prolong the life and performance of the treadmill.

- Keep the treadmill clean and maintained by dusting the components on a regular basis.
- Clean the side platforms and the visible portion of the running deck to prevent debris from accumulating underneath the running belt. Debris under the running belt will degrade the performance and prematurely wear out the running belt and deck.
- Keep your running shoes clean so that debris does not accumulate underneath the running belt.
- Clean the surface of the running belt with a clean damp cloth.
- Regularly inspect the product for loose hardware.
- The moving parts should turn freely and quietly. Abnormal moving parts will affect the safety of the equipment.
- To prolong the treadmill life, it is suggested that the product be powered off for at least 10 minutes for every 2 hours of use.
- Power off the treadmill when not in use.
- It is recommended to place the treadmill on a qualified treadmill mat that is slightly larger than the treadmill base. This will help protect your product from accumulating dust, debris and carpet fibers which can affect the performance and longevity of your treadmill.

SCAN THE QR CODE TO DOWNLOAD THE SERVICE MANUAL:

80284-EN

FOR 110V TREADMILLS

80301-EN

FOR 220V TREADMILLS

ADJUSTING THE RUNNING BELT

The running belt is properly adjusted at the factory but may loosen or change over time. It is important to properly adjust the running belt so it has the right tension and is centered on the deck, without drifting to one side.

RUNNING BELT TENSION

To check the running belt tension, pull up on the running belt in the middle of the running surface, and the running belt should lift off the running deck between 2-3 inches. If the running belt is too tight, this will negatively affect the motor's performance and also create more friction between the roller and running belt. When the running belt is too loose, it may not move smoothly with the motor.

RUNNING BELT CENTERING

To check the centering of the running belt, set the Incline to 0 and set the Speed to 3.0 mph. Watch the belt to see if it moves all the way to the left or right on the running deck. If properly centered, the belt should be centered on the running deck and the side platforms. If the running belt is not properly centered, this will cause premature running belt failure.

To adjust the running belt tension or centering, use the included Allen wrench and use this table to know which adjustment screw to turn. Repeat the steps given in the table until it is properly adjusted.

BELT ADJUSTMENT	LEFT ADJUSTMENT SCREW	RIGHT ADJUSTMENT SCREW
TOO TIGHT	1 TURN CCW	1 TURN CCW
TOO LOOSE	1 TURN CW	1 TURN CW
SHIFTED TO THE LEFT	1/4 TURN CW	1/4 TURN CCW
SHIFTED TO THE RIGHT	1/4 TURN CCW	1/4 TURN CW

CW =CLOCK-WISE CCW = COUNTER CLOCK-WISE

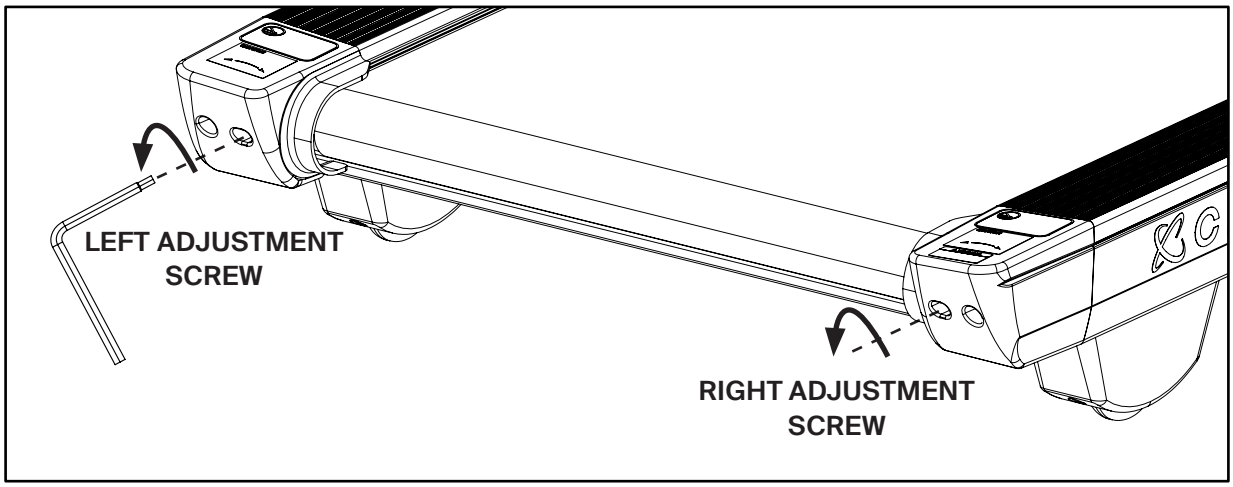

LUBRICATING THE RUNNING BELT

IMPORTANT NOTE: This treadmill does come pre-lubricated from the factory, but it is recommended to check your running belt and deck before first use as the silicone oil can dry over time. If the running belt and deck appear dry, then follow the steps below.

Lubricating the running deck and belt is essential as the friction between the two affects the life span and function of the treadmill. Therefore, it is suggested the running belt and deck be inspected regularly.

WARNING

Always unplug the treadmill from the electrical outlet before cleaning, lubricating or repairing the unit.

Follow these instructions to lubricate the running belt and deck:

1. Attach the extension tube to the bottle of lubricant. This extension tube allows you to evenly apply lubricant across the entire width the of the running belt and deck.
2. Raise the running belt up on one side and evenly apply lubricant across the width of the running deck. Ideally, the lubricant should be applied where the feet contact the deck when running, as this is where it is most needed. Use a rag to thoroughly wipe the lubricant over the running deck. Repeat this process to the other side.

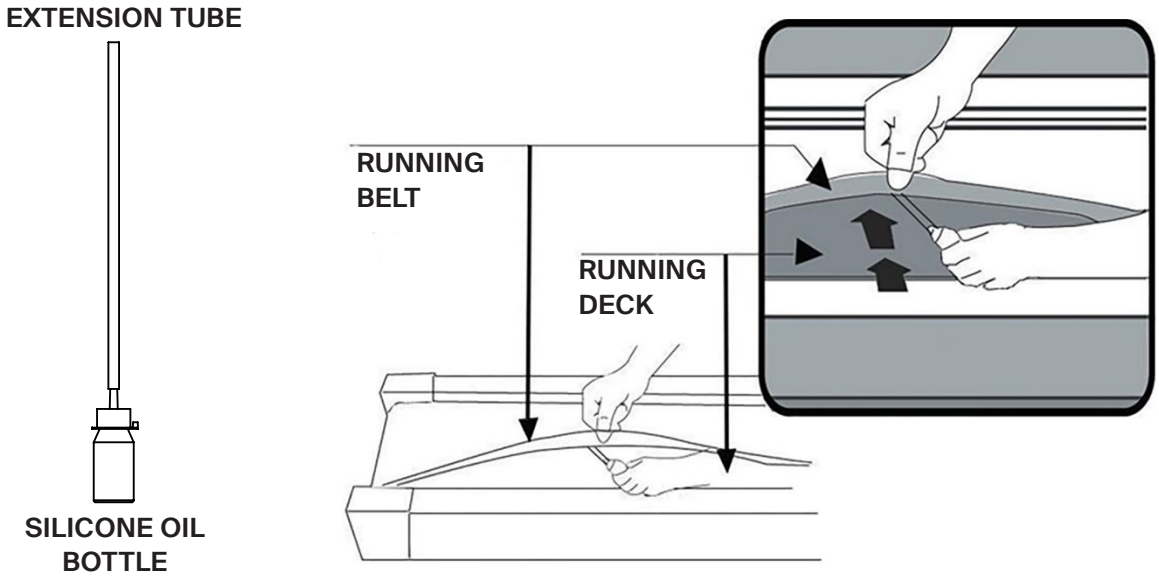

RECOMMENDED LUBRICATION SCHEDULE	
LIGHT USE (LESS THAN 3 HOURS / WEEK)	EVERY 6 MONTHS
MEDIUM USE (3 - 5 HOURS / WEEK)	EVERY 3 MONTHS
HEAVY USE (MORE THAN 5 HOURS / WEEK)	EVERY 2 MONTHS

TROUBLESHOOTING

When the treadmill electronics detect a problem or a potential problem, the HR window in the center of the console keypad will display one of the Error Codes in the following table.

WARNING

Always unplug the treadmill from the electrical outlet before cleaning, lubricating or repairing the unit.

ERROR CODE	POSSIBLE SOLUTION(S)
E00 - No Error	Reset the power using the On/Off switch
E01 - Motor Overload	1. Motor current exceeds load rating. To prevent damaging the motor, the system will restart. 2. A part of the treadmill is stuck, causing a the motor to shut off. Check for parts that are not moving normally and also trying adding running belt lubrication. 3. If you smell burning when the motor runs, or an unusual motor sound, the motor may need replacement. 4. The motor control board may need replacement.
E02 - Motor Hall Sensor Error	1. Check that the motor cable is properly connected. 2. Replace the motor or motor control board.
E03 - Motor Control Board Overcurrent	1. Motor current exceeds load rating. To prevent damaging the motor, the system will restart. 2. Check that the power cord and motor connection are properly connected. 3. Replace the motor control board.
E04 - Phase Loss	1. Check that the motor cable is properly connected. 2. Replace the motor. 3. Replace the motor control board.
E05 - Undervoltage	1. Check that the input power supply voltage is normal. 2. Check if the power cord is loose.
E06 - Overvoltage	1. Check that the input power supply voltage is normal.
E7 - Incline Adjustment Error	1. Check that the incline adjustment motor cable is properly connected. 2. Reset the power using the On/Off switch. 3. Re-calibrate the incline motor.
E08 - Motor Control Board Error	1. Check that the power cord and motor connection are properly connected. 2. Replace the motor control board.
E16 - Incline Adjustment Error	1. Check that the incline adjustment motor cable is properly connected. 2. Reset the power using the On/Off switch. 3. Contact customer service.

TROUBLESHOOTING

WARNING

Always unplug the treadmill from the electrical outlet before cleaning, lubricating or repairing the unit.

ERROR CODE	POSSIBLE SOLUTION(S)
E17 - Lift Motor Calibration Error	1. Check that the incline adjustment motor cable is properly connected. 2. Re-calibrate the incline motor.
E21 - Motor Control Board Save Data Exception	1. Turn off the power using the On/Off switch. 2. After 3 minutes, turn the power ON. If the motor control board fails to start, replace the motor control board.
E22 - Communication Error Between Console and Motor Control Board	1. Check that the cable between the console board and motor control board is properly connected. 2. Check if the console or motor control board is damaged. 3. Turn off the power using the On/Off switch. 4. After 2 minutes, turn the power ON.
E30 - Motor calibration error	1. Replace the motor control board.
E31 - Overtemperature	Wait until the machine temperature is normal before continuing to use.
E32 - Motor Reversal	Check that the motor cable UVW is properly connected.
E33 - Issue with Motor or Motor Control Board	1. Replace the motor. 2. Replace the motor control board.
E40 - The Safety Key Not In Place	1. Check if the Safety Key is loose or removed. 2. Check that the Safety Key moves free into place. 3. Check if the Safety Key is damaged. 4. Check if the console is damaged.
E50 - Other Error	Please contact customer service.
Connection Error - Communication error between the Console and Console Board	1. Check if the console board wire is loose or detached from the console board. 2. Check the connectors of the console board and the console board wire. 3. Check if the console is damaged. 4. Turn off the power using the On/Off switch. After 2 minutes, turn the power ON.

CENTR