Form No. 3478-143 Rev A

TORO®

Count on it.

Operator's Manual

Stump Grinder

Compact Tool Carrier

Model No. 22429—Serial No. 420000000 and Up

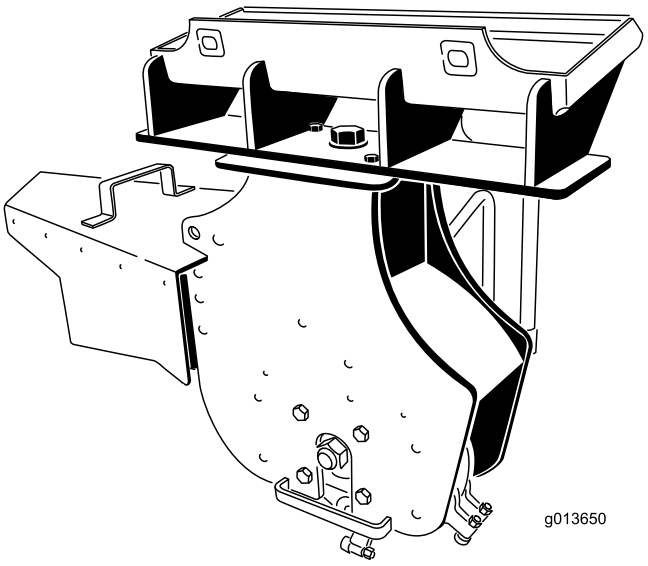

Register at www.Toro.com.
Original Instructions (EN)

CE UK CA

3478-143

This product complies with all relevant European directives. For details, please see the Declaration of Incorporation (DOI) at the back of this publication.

⚠ WARNING

CALIFORNIA
Proposition 65 Warning

Use of this product may cause exposure to chemicals known to the State of California to cause cancer, birth defects, or other reproductive harm.

Introduction

This machine is designed for use on Toro compact tool carriers to grind and remove tree stumps and surface roots. It is not intended to cut rock or any other material other than wood and the soil around a stump. Using this product for purposes other than its intended use could prove dangerous to you and bystanders. Do not modify the machine or attachments.

This machine should be operated, serviced, and repaired only by professionals familiar with its characteristics and acquainted with the relevant safety procedures.

Operate this machine in ambient temperatures from -18 to 38°C (0 to 100 °F). Contact your Authorized Service Dealer for provisions required for operating in extreme temperatures.

Read this information carefully to learn how to operate and maintain your product properly and to avoid injury and product damage. You are responsible for operating the product properly and safely.

You may contact Toro directly at www.Toro.com for product safety and operation training materials, accessory information, help finding a dealer, or to register your product.

Whenever you need service, genuine Toro parts, or additional information, contact an Authorized Service Dealer or Toro Customer Service and have the model and serial numbers of your product ready. Figure 1 identifies the location of the model and serial numbers on the product. Write the numbers in the space provided.

Important: **With your mobile device, you can scan the QR code on the serial number decal (if equipped) to access warranty, parts, and other product information.**

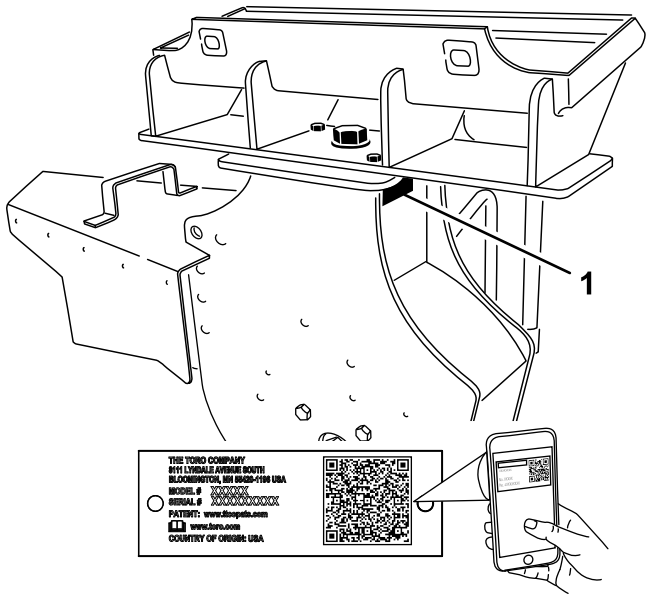

g245347

Figure 1

1. Model and serial number location

Model No. _____

Serial No. _____

This manual identifies potential hazards and has safety messages identified by the safety-alert symbol (Figure 2), which signals a hazard that may cause serious injury or death if you do not follow the recommended precautions.



g000502

Figure 2

1. Safety-alert symbol

This manual uses 2 words to highlight information. **Important** calls attention to special mechanical information and **Note** emphasizes general information worthy of special attention.

© 2025—The Toro® Company
8111 Lyndale Avenue South
Bloomington, MN 55420

Contact us at www.Toro.com.
Printed in the USA
All Rights Reserved

Contents

Safety 3
General Safety 3
Slope Safety 4
Stump Grinder Safety 4
Maintenance and Storage Safety 4
Safety and Instructional Decals 5
Setup 6
1 Preparing the Traction Unit 7
2 Selecting the Correct Shield Brackets 8
3 Installing the Shield Brackets 9
4 Assembling the Operator Shield 11
5 Installing the Chip Guard 12
Product Overview 13
Specifications 13
Operation 13
Installing and Removing the Attachment 13
Grinding Stumps 14
Grinding Roots 15
Transport Position 15
Transporting the Stump Grinder on a Trailer 15
Operating Tips 15
Maintenance 16
Recommended Maintenance Schedule(s) 16
Greasing the Machine 16
Replacing the Teeth 17
Storage 18
Troubleshooting 19

Safety

⚠ DANGER

There may be buried utility lines in the work area. Digging into them may cause a shock or an explosion.

Have the property or work area marked for buried lines and do not dig in marked areas. Contact your local marking service or utility company to have the property marked (for example, in the US, call 811 or in Australia, call 1100 for the nationwide marking service).

General Safety

Always follow all safety instructions to avoid serious injury or death.

- Do not exceed the rated operating capacity, as the machine may become unstable, which may result in loss of control.
- **Do not transport an attachment with the arms raised or extended (if applicable)**. Always transport the attachment close to the ground; refer to Transport Position (page 15).
- Have the property or work area marked for buried lines and other objects, and do not dig in marked areas.
- Read and understand the content of this *Operator's Manual* before starting the machine.
- Use your full attention while operating the machine. Do not engage in any activity that causes distractions; otherwise, injury or property damage may occur.
- Never allow children or untrained people to operate the machine.
- Keep your hands and feet away from the moving components and attachments.
- Do not operate the machine without the guards and other safety protective devices in place and working on the machine.
- Keep bystanders and pets away from the machine.
- Stop the machine, shut off the machine, and remove the key before servicing, fueling, or unclogging the machine.

Improperly using or maintaining this machine can result in injury. To reduce the potential for injury, comply with these safety instructions and always pay attention to the safety-alert symbol ⚠, which means Caution, Warning, or Danger—personal safety instruction. Failure to comply with these instructions may result in personal injury or death.

Slope Safety

- **Operate the machine up and down slopes with the heavy end of the machine uphill.** Weight distribution changes with attachments. This attachment makes the front of machine the heavy end.
- Raising or extending (if applicable) the loader arms on a slope affects the stability of the machine. Keep the loader arms in the lowered and retracted position when on slopes..
- Slopes are a major factor related to loss of control and tip-over accidents, which can result in severe injury or death. Operating the machine on any slope or uneven terrain requires extra caution.
- Establish your own procedures and rules for operating on slopes. These procedures must include surveying the site to determine which slopes are safe for machine operation. Always use common sense and good judgment when performing this survey.
- Slow down and use extra care on hillsides. Ground conditions can affect the stability of the machine.
- Avoid starting or stopping on a slope. If the machine loses traction, proceed slowly, straight down the slope.
- Avoid turning on slopes. If you must turn, turn slowly and keep the heavy end of the machine uphill.
- Keep all movements on slopes slow and gradual. Do not make sudden changes in speed or direction.
- If you feel uneasy operating the machine on a slope, do not do it.
- Watch for holes, ruts, or bumps, as uneven terrain could overturn the machine. Tall grass can hide obstacles.
- Use caution when operating on wet surfaces. Reduced traction could cause sliding.
- Evaluate the area to ensure that the ground is stable enough to support the machine.
- Use caution when operating the machine near the following:
  - Drop-offs
  - Ditches
  - Embankments
  - Bodies of water

  The machine could suddenly roll over if a track goes over the edge or the edge caves in. Maintain a safe distance between the machine and any hazard.
- Do not remove or add attachments on a slope.
- Do not park the machine on a hillside or slope.

Stump Grinder Safety

- For wheeled machines, do not use the counterweight on the traction unit when using the stump grinder.
- Never operate the stump grinder without the shield installed on the traction unit and the chip guard on the grinder.
- Keep all bystanders at least 9 m (30 ft) away from the work area.
- Only use the stump grinder for grinding stumps less than 91 cm (36 inch) tall.

Maintenance and Storage Safety

- Check fasteners at frequent intervals for proper tightness to ensure that the equipment is in safe operating condition.
- Refer to this *Operator's Manual* for important details if you store the attachment for an extended period of time.
- Maintain or replace safety and instruction labels, as necessary.

Safety and Instructional Decals

Safety decals and instructions are easily visible to the operator and are located near any area of potential danger. Replace any decal that is damaged or missing.

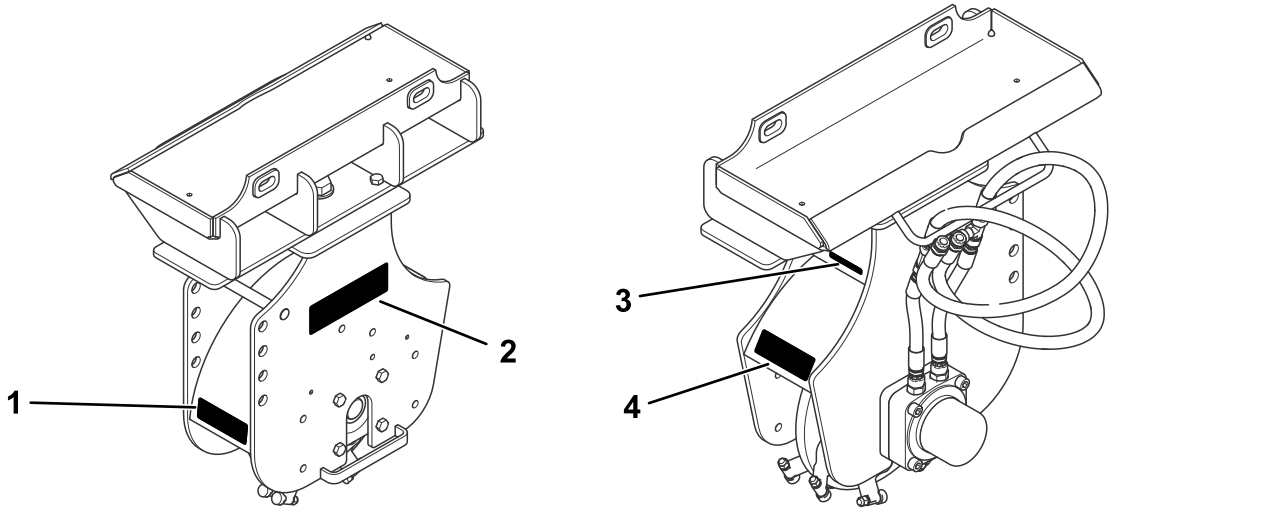

g570377

Figure 3

1. 136-5818
2. 136-5814
3. 133-8061
4. 136-5817



decal133-8061

133-8061

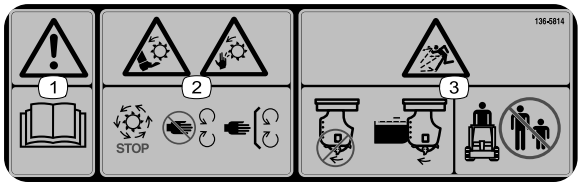

decal136-5814

136-5814

1. Warning—read the *Operator's Manual*.
2. Cutting/dismemberment hazard of hands and feet, rotating knives/blades—wait for all moving parts to stop; keep all guards and shields in place.
3. Thrown object hazard—keep all guards and shields in place; keep bystanders away from the machine.

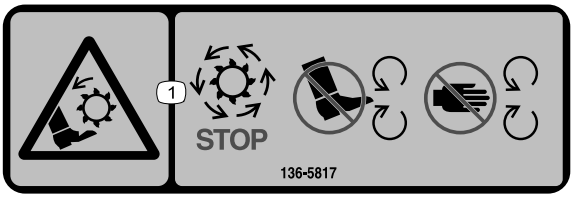

decal136-5817

136-5817

1. Cutting/dismemberment hazard of foot, rotating knives/blades—wait for all moving parts to stop; keep hands and feet away from moving parts.

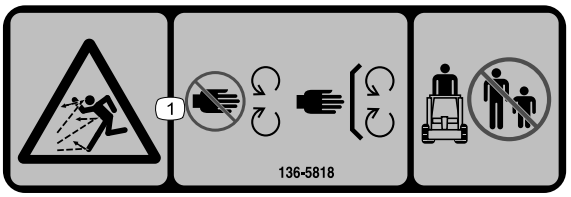

decal136-5818

136-5818

1. Thrown object hazard—keep all guards and shields in place; keep bystanders away from the machine.

Setup

Loose Parts

Use the chart below to verify that all parts have been shipped.

Procedure	Description	Qty.	Use
1	No parts required	–	Prepare the traction unit.
2	Left shield bracket indicated for the machine	1	Select the correct shield brackets.
	Right shield bracket indicated for the machine	1	
3	Self-tapping screw (5/16 x 3/4 inch)	4	Install the shield brackets.
	Bolt (1/4 x 3/4 inch)—TX 700, TX 1000, and TX 1300 series only	4	
	Locknut (1/4 inch)—TX 700, TX 1000, and TX 1300 series only	4	
4	Shield support—200, 300, TX 400, or TX 500 series only	2	Assemble the operator shield.
	Shield support—TX 700 or TX 1000 series only	2	
	Shield support—TX 1300 series only	2	
	Shield	1	
	Bolt (1/4 x 1-1/2 inches)	8	
	Washer	8	
	Locknut (1/4 inch)	8	
5	Chip guard	1	Install the chip guard.
	Guard pin	1	
	Hairpin cotter	1	

1

Preparing the Traction Unit

No Parts Required

Procedure

1. Park the machine on a level surface.
2. Engage the parking brake (if applicable).
3. Lower the loader arms.
4. Shut off the engine and remove the key.

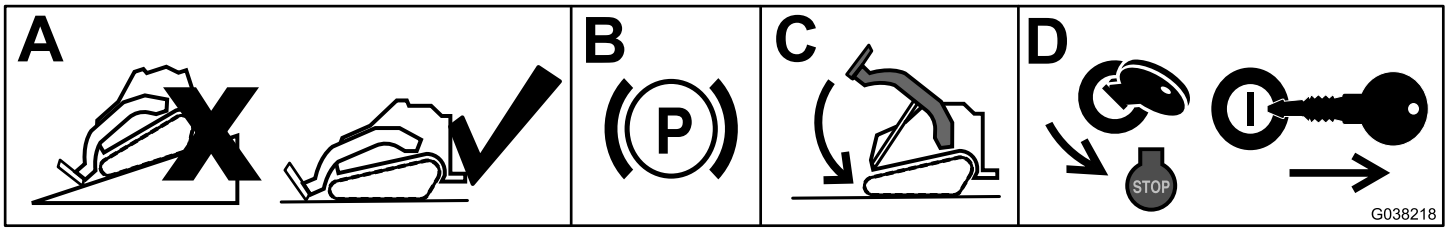

g038218

Figure 4

2

Selecting the Correct Shield Brackets

Parts needed for this procedure:

1	Left shield bracket indicated for the machine
1	Right shield bracket indicated for the machine

Procedure

Use the following table to select the brackets appropriate for your traction unit. Discard all other brackets.

200 series 300 series TX 400 series TX 500 series	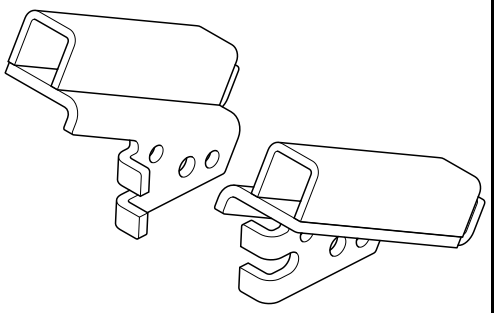
TX 700 series	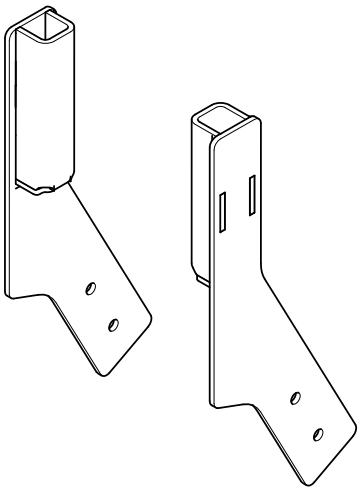
TX 1000 (non-Turbo) TX 1300 series	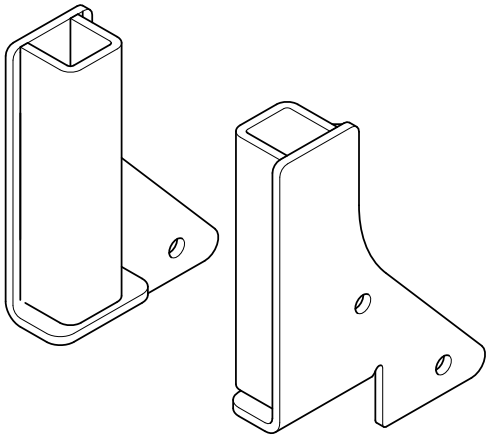
TX 1000 Turbo	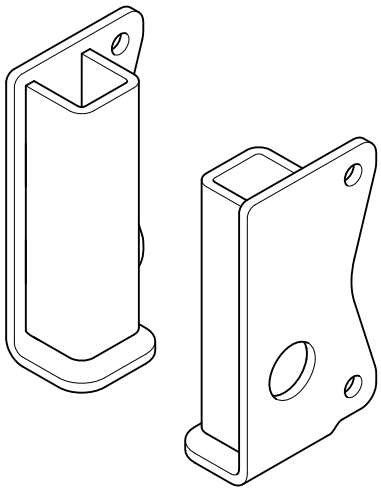

3

Installing the Shield Brackets

Parts needed for this procedure:

4	Self-tapping screw (5/16 x 3/4 inch)
4	Bolt (1/4 x 3/4 inch)—TX 700, TX 1000, and TX 1300 series only
4	Locknut (1/4 inch)—TX 700, TX 1000, and TX 1300 series only

200 or 300 Series Traction Units Only

1. Insert the tab on the shield bracket into the lift-point hole on the traction unit, with the hole in the bracket aligning with the small hole in the traction unit frame.

   Note: There is a right and left bracket. Ensure that you install the correct bracket on each side. The tab should be in the lift-point hole and the bracket should be on the outside of the frame.

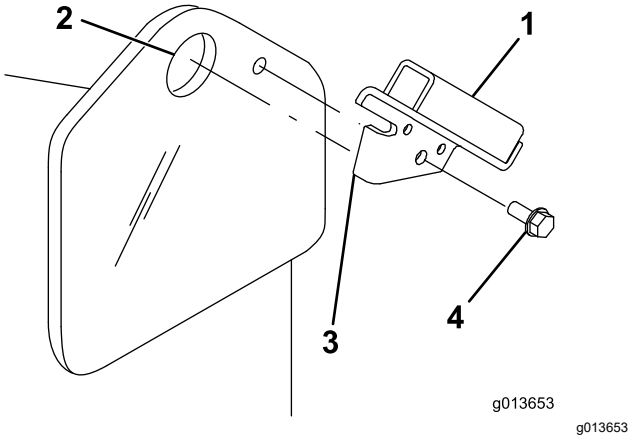

Figure 5

1. Shield bracket
2. Lift-point hole
3. Tab
4. Self-tapping screw

2. Secure the bracket to the frame with a self-tapping screw.
3. Repeat steps 1 and 2 for the other side of the traction unit.

TX 400 or 500 Series Traction Units Only

⚠ WARNING

Using a drill without proper eye protection may allow debris to enter the eye, causing injury.

When drilling, always wear eye protection.

1. Measure in from the edges of the frame as shown and mark the locations of the holes for mounting the shield bracket.

   Note: If the holes exist, skip to step 3.

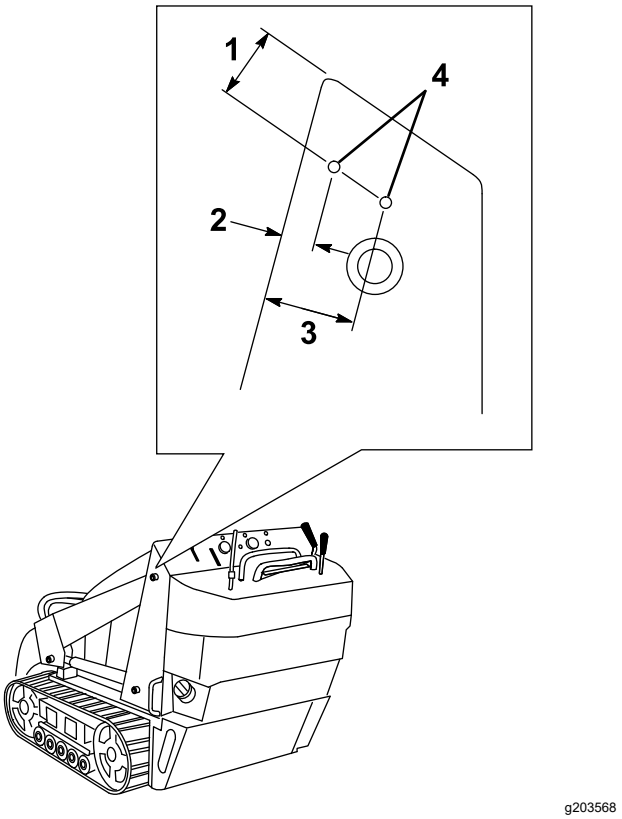

Figure 6

1. 4.6 cm (1.8 inches)
2. 1.4 cm (0.6 inch)
3. 4.6 cm (1.8 inches)
4. Mounting holes

2. Drill a hole (5/16 inch) through the frame at each marked location.
3. Align the tab on the shield bracket with the front edge of the frame with the bracket inside of the loader-arm pocket.

   Note: There is a right and left bracket. Ensure that you install the correct bracket on each side. The tab should be over the frame edge and the bracket should be inside the loader-arm pocket with the 2 smaller holes in the bracket lined up with the holes you drilled in the frame.

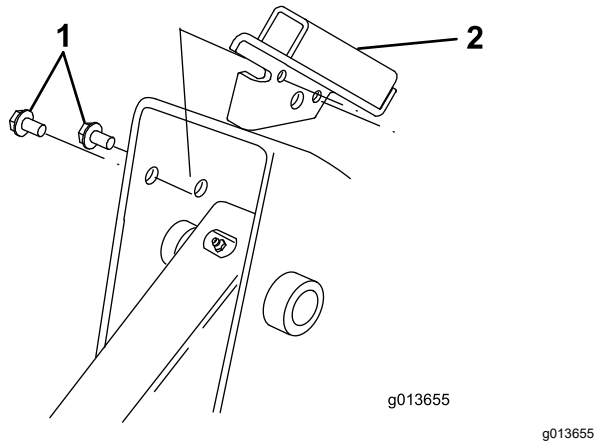

g013655

Figure 7

1. Self-tapping screw
2. Shield bracket

4. Secure the bracket to the frame with 2 self-tapping screws.
5. Repeat steps 1 through 4 for the other side of the traction unit.

TX 700, TX 1000, or TX 1300 Series Traction Units Only

⚠ WARNING

Using a drill without proper eye protection may allow debris to enter the eye, causing injury.

When drilling, always wear eye protection.

1. Measure in from the edges of the frame as shown and mark the locations of the holes for mounting the shield bracket.

   Note: If the holes exist, skip to step 3.

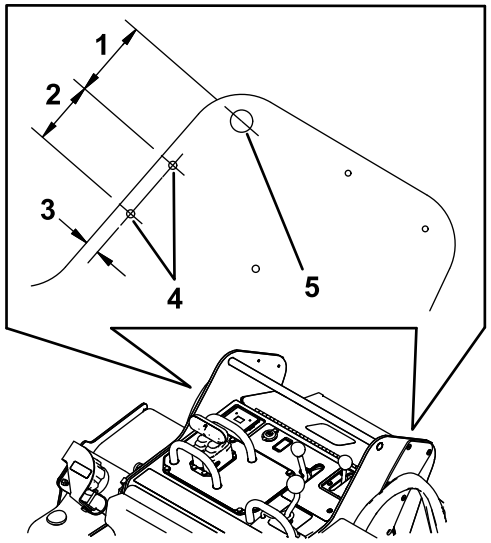

g245655

Figure 8

1. 7.0 cm (2-3/4 inches)
2. 5.7 cm (2-1/4 inches)
3. 1.3 cm (1/2 inch)
4. Hole
5. Reference bar

2. Drill a hole (9/32 inch) through the frame at each marked location.
3. Install the left shield bracket on the left frame using 2 bolts (1/4 x 3/4 inch) and 2 locknuts (1/4 inch).

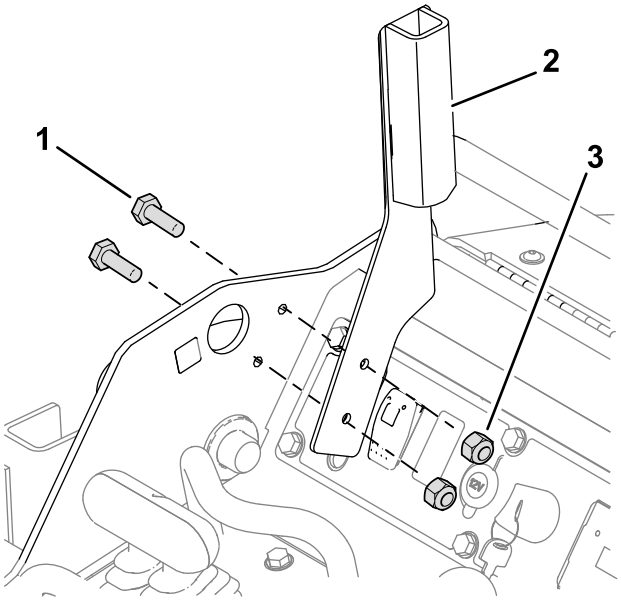

g461111

Figure 9

TX 700 Traction Unit Shown

1. Bolt—1/4 x 3/4 inch (2)
2. Left shield bracket
3. Locknut—1/4 inch (2)

4. Repeat steps 1 through 3 for the other side of the traction unit.

4

Assembling the Operator Shield

Parts needed for this procedure:

2	Shield support—200, 300, TX 400, or TX 500 series only
2	Shield support—TX 700 or TX 1000 series only
2	Shield support—TX 1300 series only
1	Shield
8	Bolt (1/4 x 1-1/2 inches)
8	Washer
8	Locknut (1/4 inch)

Assembling the Shield

Note: Refer to the figures below to determine the brackets to use on your traction unit.

1. Slide the shield supports into the pockets in the shield brackets on the traction unit.

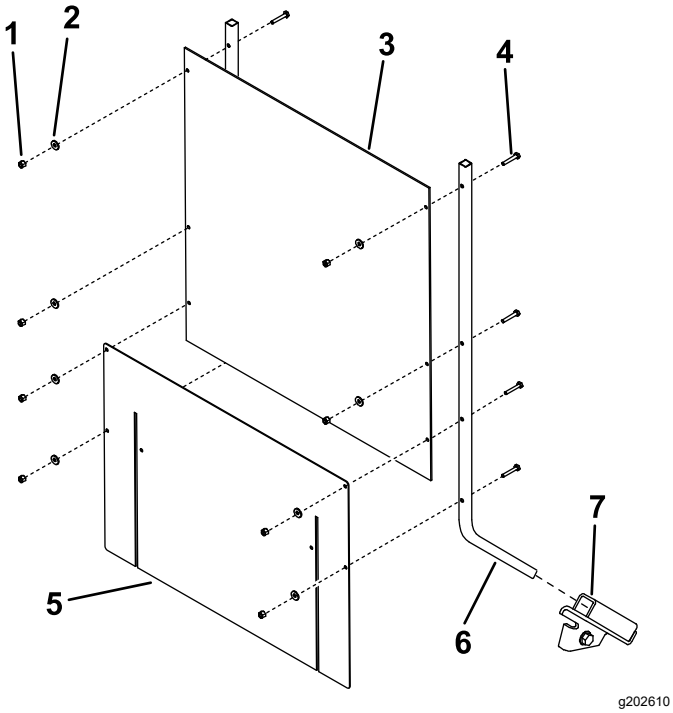

Figure 10

200/300 Series or TX 400/500 Series Traction Units

1. Locknut (8)
2. Washer (8)
3. Shield
4. Bolt (8)
5. Skirt
6. Shield support (2)
7. Shield bracket (2)

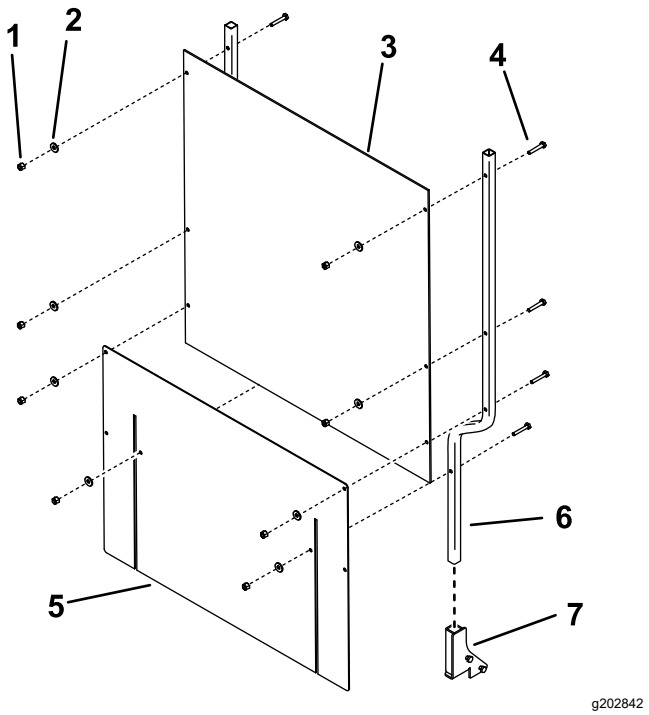

Figure 11

TX 700 or TX 1000 Series Traction Units

1. Locknut (8)
2. Washer (8)
3. Shield
4. Bolt (8)
5. Skirt
6. Shield support (2)
7. Shield bracket (2)

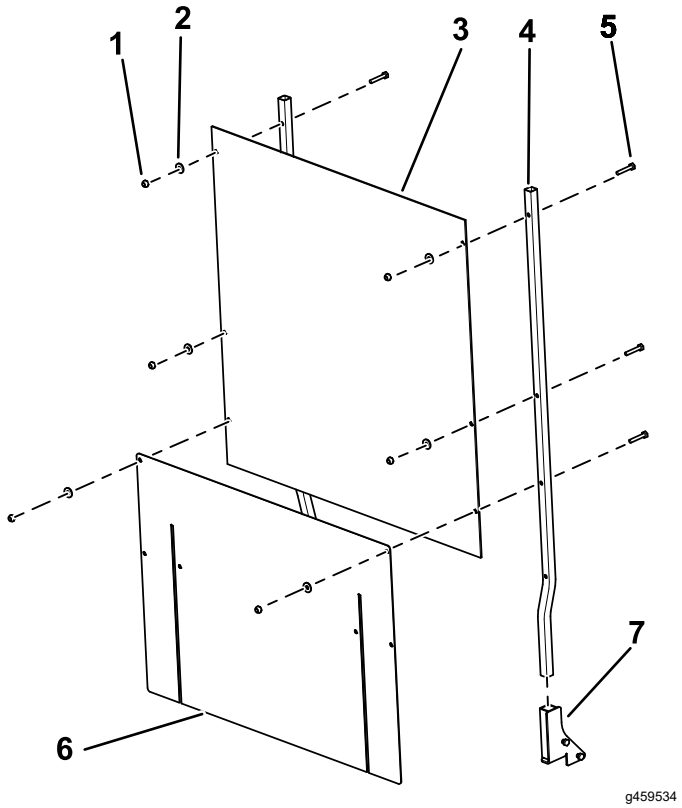

Figure 12

TX 1300 Series Traction Units

1. Locknut (8)
2. Washer (8)
3. Shield
4. Shield support (2)
5. Bolt (8)
6. Skirt
7. Shield bracket (2)

2. Assemble the shield and flexible skirt to the shield supports using 8 bolts (1/4 x 1-1/2 inches), 8 washers, and 8 locknuts (1/4 inch).

   Note: The skirt should drape over the engine or hood.

5

Installing the Chip Guard

Parts needed for this procedure:

1	Chip guard
1	Guard pin
1	Hairpin cotter

Procedure

The stump grinder has 4 sets of mounting holes for positioning the chip guard. Move the guard up (upper holes) when you are grinding close to the ground and down (lower holes) when you are chipping tall stumps. Install the chip guard as follows:

1. Position the mounting tube on the guard between 2 holes on the grinder.

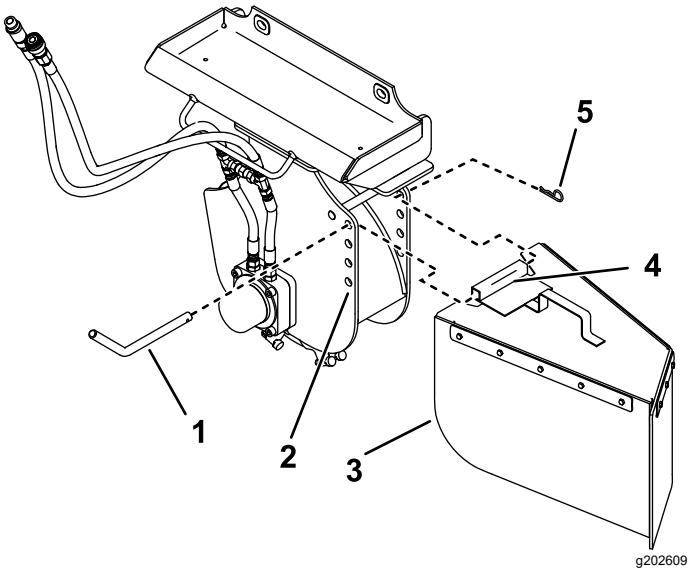

Figure 13

1. Guard pin
2. Mounting holes
3. Chip guard
4. Mounting tube
5. Hairpin cotter

2. Slide the guard pin through the holes in the grinder and the mounting tube.
3. Secure the pin with a hairpin cotter.

Product Overview

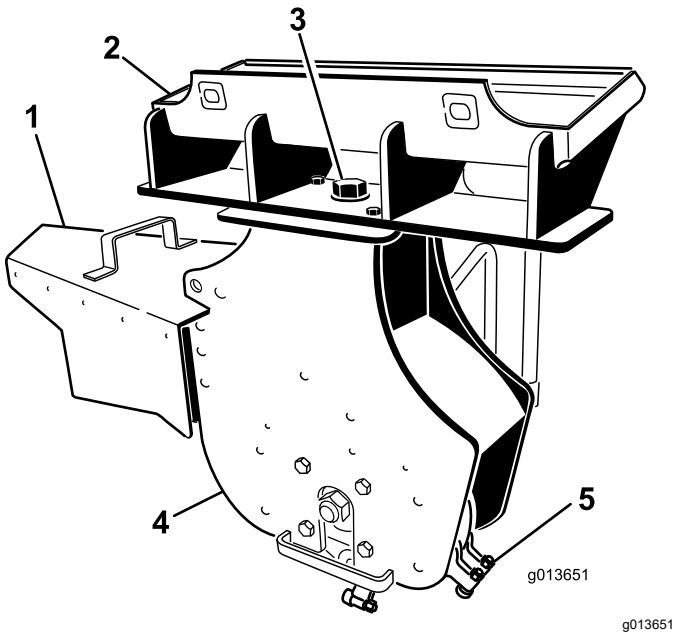

g013651

Figure 14

1. Chip guard
2. Mounting plate
3. Pivot bolt
4. Stump grinding head
5. Teeth

Specifications

Note: Specifications and design are subject to change without notice.

Width (with chip guard)	112 cm (44 inches)
Width (without chip guard)	66 cm (26 inches)
Length	51 cm (20 inches)
Height	79 cm (31 inches)
Weight	120 kg (265 lb)

To ensure optimum performance and continued safety certification of the machine, use only genuine Toro replacement parts and accessories. Replacement parts and accessories made by other manufacturers could be dangerous, and such use could void the product warranty.

Operation

Installing and Removing the Attachment

Refer to the *Operator's Manual* for the traction unit for the installation and removal procedure.

Important: **Before installing the attachment, position the machine on a level surface, ensure that the mount plates are free of any dirt or debris, and ensure that the pins move freely. If the pins do not move freely, grease them.**

Note: Always use the traction unit to lift and move the attachment.

⚠ WARNING

If you do not fully seat the quick-attach pins through the attachment mount plate, the attachment could fall off the machine, crushing you or bystanders.

Ensure that the quick-attach pins are fully seated in the attachment mount plate.

⚠ WARNING

Hydraulic fluid escaping under pressure can penetrate skin and cause injury. Fluid injected into the skin must be surgically removed within a few hours by a doctor familiar with this form of injury; otherwise, gangrene may result.

- **Ensure that all hydraulic-fluid hoses and lines are in good condition and all hydraulic connections and fittings are tight before applying pressure to the hydraulic system.**
- **Keep your body and hands away from pinhole leaks or nozzles that eject high-pressure hydraulic fluid.**
- **Use cardboard or paper to find hydraulic leaks; never use your hands.**

⚠ CAUTION

Hydraulic couplers, hydraulic lines/valves, and hydraulic fluid may be hot. If you contact hot components, you may be burned.

- **Wear gloves when disconnecting the hydraulic couplers.**
- **Allow the machine to cool before touching hydraulic components.**
- **Do not touch hydraulic fluid spills.**

Grinding Stumps

⚠ WARNING

During operation, debris fly in all directions and can cause injury to eyes and other exposed body parts.

- **Never operate the stump grinder without the shield installed on the traction unit and the chip guard on the grinder.**
- **During operation, wear eye protection, hearing protection, substantial, slip-resistant footwear, and long pants.**
- **Keep all bystanders at least 9 m (30 ft) away from the work area.**

1. If your traction unit has a speed selector, move it to the SLOW position.
2. Start the engine.
3. Pull the auxiliary hydraulics lever to the operator grip to engage the stump grinder.
4. Position the grinder on the left side and behind the stump.

   Note: Many variables, such as the type of tree, age, size, amount of moisture, and condition, affect the required amount of time and effort to grind a stump.

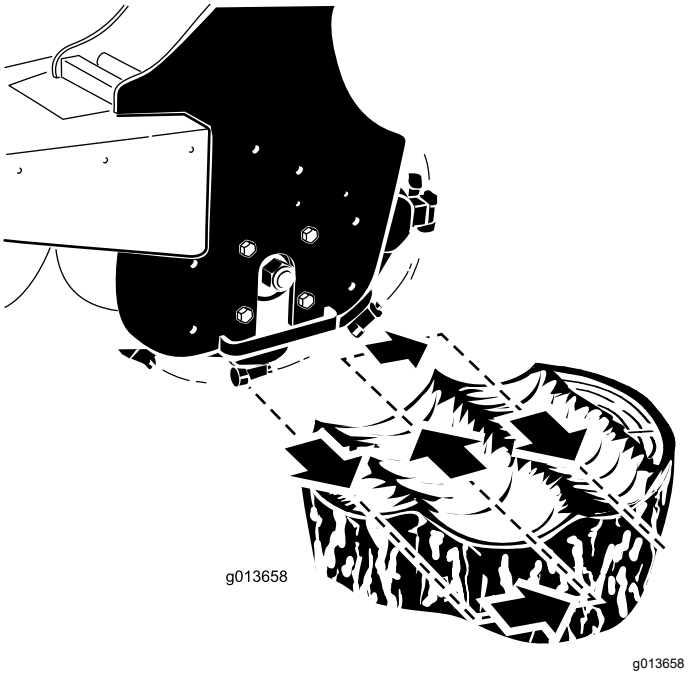

g013658

Figure 15

5. Swing the grinder toward you using the attachment-tilt lever, grinding at a depth of 0.5 to 5 cm (1/4 to 2 inches), depending on the hardness of the wood.

   Note: If you cut too deep, the grinder stalls. If it stalls, raise it slightly and try again.
6. Swing the grinder back out, lower it 0.5 to 5 cm (1/4 to 2 inches), and repeat steps 4 through 6 until you have ground down a few inches.
7. Raise the loader arms to the original height.
8. Move the grinder to the right.
9. Repeat steps 4 through 8 until you reach the right side of the stump.
10. Return the grinder to the left side of the stump, lower it, and repeat steps 3 through 10 until you have ground the stump into the ground.

    Note: To contain the chips, you may need to stop the grinder and move the chip guard up as you move the grinder down.
11. When finished, stop the grinder by moving the auxiliary hydraulics lever to the NEUTRAL position.

Grinding Roots

1. Stop the grinder and hang it vertically from the loader arms a few centimeters (inches) off the ground.
2. Shut off the engine and remove the key.
3. Loosen the large bolt on the top of the grinder.

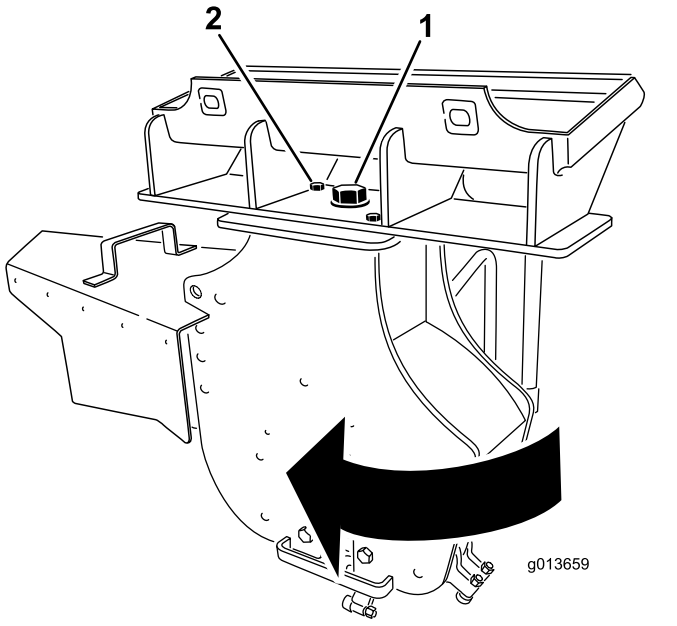

Figure 16

1. Large bolt—loosen
2. Front bolt—remove

4. Remove the front bolt and nut securing the grinder.
5. Swing the grinder 30 degrees clockwise.
6. Torque the large bolt on top of the grinder to 406 N·m (300 ft-lb).
7. Install the bolt and nut in the front hole and torque them to 101 N·m (75 ft-lb).
8. Start the traction unit and start the grinder.
9. Lower the grinder into the root.
10. Move the grinder along the length of the root by moving the traction unit over the root.
11. When finished, stop the grinder by moving the auxiliary hydraulics lever to the NEUTRAL position.
12. Shut off the engine and remove the key.
13. Loosen the large bolt on the top of the grinder.
14. Remove the front bolt and nut securing the grinder.
15. Swing the grinder 30 degrees counter-clockwise.
16. Torque the large bolt on top of the grinder to 406 N·m (300 ft-lb).
17. Install the bolt and nut in the front hole and torque them to 101 N·m (75 ft-lb).

Transport Position

When transporting the attachment, keep it as close to the ground as possible, no more than 15 cm (6 inches) above the ground. Tilt it rearward.

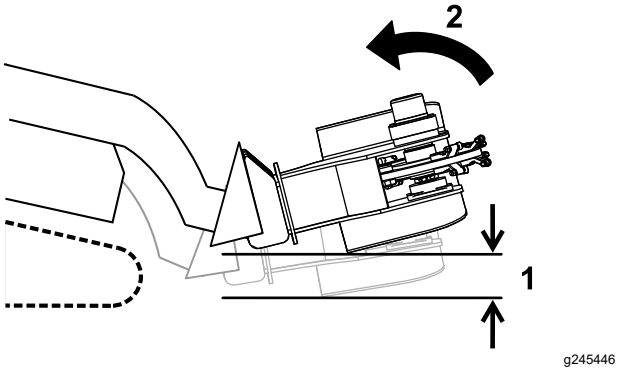

Figure 17

1. No more than 15 cm (6 inches) above the ground
2. Tilt the attachment rearward.

Transporting the Stump Grinder on a Trailer

Place the attachment on a trailer or truck capable of carrying it. Securely tie it to the trailer or truck using tie straps appropriate for the weight of the attachment and for highway use.

Important: **Remove the operator's shield before transporting the traction unit to avoid damage to the shield of the traction unit.**

Operating Tips

- Always use full throttle (maximum engine speed).
- Never transport the attachment with the loader arms raised. Keep the arms lowered and the attachment tilted up.
- If your traction unit has a speed selector (present on some wheeled traction units), set it to the SLOW (turtle) position.
- If your traction unit has a flow divider (present on some wheeled traction units), adjust it to approximately the 10 o'clock position.

Maintenance

Recommended Maintenance Schedule(s)

Maintenance Service Interval	Maintenance Procedure
Before each use or daily	• Grease the machine. • Check the condition of the teeth and rotate or replace any that are worn or damaged.
Before storage	• Grease the machine. • Paint chipped surfaces.

Greasing the Machine

Service Interval: Before each use or daily

Before storage

Grease the fitting in Figure 18.

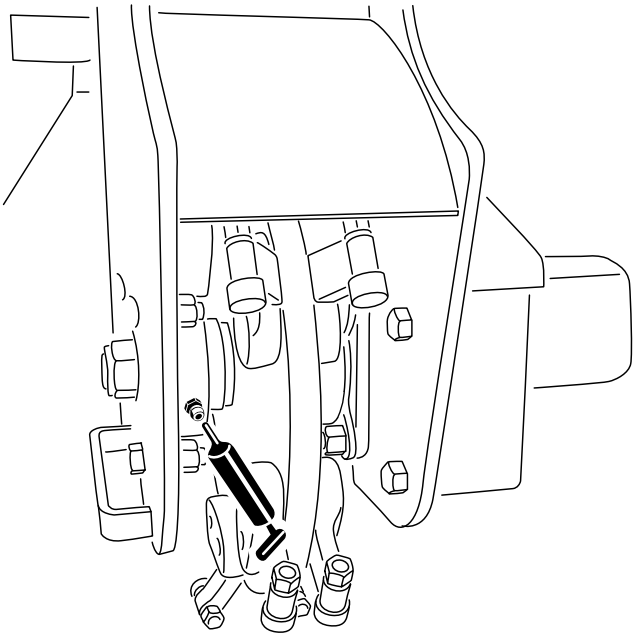

g203602

Figure 18

Grease Type: General-purpose grease

1. Park the machine on a level surface, lower the loader arms, and engage the parking brake (if applicable).
2. Shut off the engine and remove the key.
3. Clean the grease fitting with a rag.
4. Connect a grease gun to the fitting.
5. Pump grease into the fitting until grease begins to ooze out of the bearings.
6. Wipe up any excess grease.

Replacing the Teeth

Service Interval: Before each use or daily—Check the condition of the teeth and rotate or replace any that are worn or damaged.

Due to the high amount of wear placed on the teeth, you will need to rotate and replace them periodically.

Each tooth is indexed with 3 positions so that you can rotate it twice, exposing a new sharp edge before replacing the tooth.

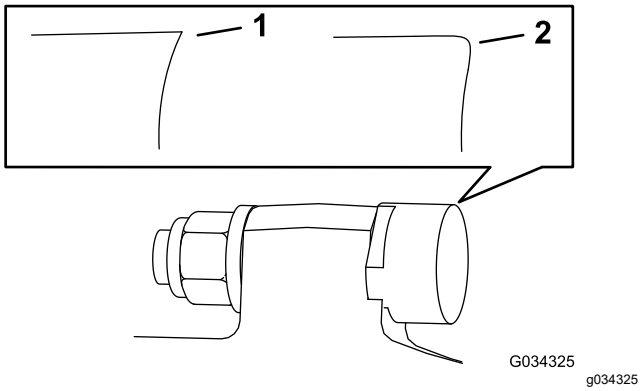

Figure 19

1. Sharp tooth
2. Worn tooth

To rotate a tooth, loosen the nut securing the tooth (Figure 20). Push the tooth forward and rotate it one third of a turn, bringing an unused edge to the outside. Torque the nut securing the tooth to 37 to 45 N·m (27 to 33 ft-lb).

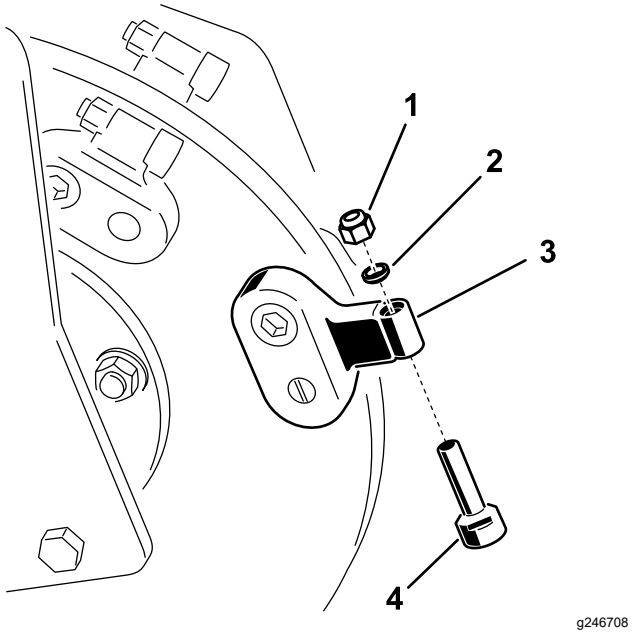

Figure 20

(Your grinder's appearance may vary from that shown in the illustration)

1. Nut
2. Spacer
3. Tooth holder
4. Tooth

To replace a tooth, remove the nut securing the tooth to remove it, then install a new tooth and nut in the same position (Figure 20). Torque the nut securing the tooth to 37 to 45 N·m (27 to 33 ft-lb).

Storage

1. Before long-term storage, wash the attachment with mild detergent and water to remove dirt and grime.
2. Check the condition of the teeth. Turn or replace any worn or damaged teeth.
3. Check and tighten all bolts, nuts, and screws. Repair or replace any damaged or worn part.
4. Ensure that all hydraulic couplers are connected together to prevent contamination of the hydraulic system.
5. Paint all scratched or bare metal surfaces. Paint is available from your Authorized Service Dealer.
6. Store the attachment in a clean, dry garage or storage area. Cover it to protect it and keep it clean.

Troubleshooting

Problem	Possible Cause	Corrective Action
The cutting disk stops during cutting.	1. You are cutting too deep. 2. Teeth are worn, damaged, or broken.	1. Raise the loader arms 13 mm (1/2 inch). 2. Rotate or replace any worn, damaged, or broken teeth.
The cutting disk does not turn or turns slowly.	1. A hydraulic coupler is not completely connected. 2. A hydraulic coupler is damaged. 3. There is an obstruction in a hydraulic hose. 4. An auxiliary valve on the traction unit is not opening. 5. The hydraulic motor or drive has failed. 6. The check valve brake is reversed.	1. Check and tighten all couplers. 2. Check/replace couplers. 3. Find and remove the obstruction. 4. Repair the valve. 5. Contact your Authorized Service Dealer. 6. Reverse the check valve direction; contact your Authorized Service Dealer.
The grinder does not cut fast enough.	1. Teeth are worn. 2. The setting is wrong on the flow divider and speed lever (applicable wheeled units only). 3. There is a restriction in a quick coupler or hose. 4. The hydraulic system is too hot. 5. The relief valve is set below specifications.	1. Rotate or replace any worn teeth. 2. Set the flow divider to the 10 o'clock position and the speed lever to the turtle position. 3. Check the hoses and couplers and repair any problems found. 4. Shut the system down and allow it to cool. 5. Contact your Authorized Service Dealer.
The cutting disk turns in the wrong direction.	1. The auxiliary-valve lever is in the wrong position. 2. The hydraulic hoses are reversed.	1. Move the auxiliary-valve lever to the rearward position. 2. Disconnect the hoses and switch positions.

Notes:

Declaration of Incorporation

The Toro Company, 8111 Lyndale Avenue South, Bloomington, MN, USA declares that the following unit(s) conform(s) to the directives listed, when installed in accordance with the accompanying instructions onto certain Toro models as indicated on the relevant Declarations of Conformity.

Model No.	Serial No.	Product Description	Invoice Description	General Description	Directive
22429	404320000 and Up	Stump Grinder	STUMP GRINDER ATTACHMENT CE	Stump Grinder	2006/42/EC

Relevant technical documentation has been compiled as required per Part B of Annex VII of 2006/42/EC.

We will undertake to transmit, in response to requests by national authorities, relevant information on this partly completed machinery. The method of transmission shall be electronic transmittal.

This machinery shall not be put into service until incorporated into approved Toro models as indicated on the associated Declaration of Conformity and in accordance with all instructions, whereby it can be declared in conformity with all relevant Directives.

Certified:



Chad Moe
Sr. Engineering Manager
8111 Lyndale Ave. South
Bloomington, MN 55420, USA
October 23, 2025

Authorized Representative:

Marcel Dutrieux
Manager European Product Integrity
Toro Europe NV
Nijverheidsstraat 5
2260 Oevel
Belgium

UK Declaration of Incorporation

The Toro Company, 8111 Lyndale Avenue South, Bloomington, MN, USA declares that the following unit(s) conform(s) to the directives listed, when installed in accordance with the accompanying instructions onto certain Toro models as indicated on the relevant Declarations of Conformity.

Model No.	Serial No.	Product Description	Invoice Description	General Description	Regulation
22429	404320000 and Up	Stump Grinder	STUMP GRINDER ATTACHMENT CE	Stump Grinder	S.I. 2008 No. 1597

Relevant technical documentation has been compiled as required per Schedule 10 of S.I. 2008 No. 1597.

We will undertake to transmit, in response to requests by national authorities, relevant information on this partly completed machinery. The method of transmission shall be electronic transmittal.

This machinery shall not be put into service until incorporated into approved Toro models as indicated on the associated Declaration of Conformity and in accordance with all instructions, whereby it can be declared in conformity with all relevant Directives.

This declaration has been issued under the sole responsibility of the manufacturer.
The object of the declaration is in conformity with relevant UK legislation.

Authorized Representative:

Marcel Dutrieux
Manager European Product Integrity
Toro U.K. Limited
Spellbrook Lane West
Bishop's Stortford
CM23 4BU
United Kingdom

Chad Moe
Sr. Engineering Manager
8111 Lyndale Ave. South
Bloomington, MN 55420, USA
October 23, 2025

California Proposition 65 Warning Information

What is this warning?

You may see a product for sale that has a warning label like the following:



WARNING: Cancer and Reproductive Harm—www.p65Warnings.ca.gov.

What is Prop 65?

Prop 65 applies to any company operating in California, selling products in California, or manufacturing products that may be sold in or brought into California. It mandates that the Governor of California maintain and publish a list of chemicals known to cause cancer, birth defects, and/or other reproductive harm. The list, which is updated annually, includes hundreds of chemicals found in many everyday items. The purpose of Prop 65 is to inform the public about exposure to these chemicals.

Prop 65 does not ban the sale of products containing these chemicals but instead requires warnings on any product, product packaging, or literature with the product. Moreover, a Prop 65 warning does not mean that a product is in violation of any product safety standards or requirements. In fact, the California government has clarified that a Prop 65 warning "is not the same as a regulatory decision that a product is 'safe' or 'unsafe.'" Many of these chemicals have been used in everyday products for years without documented harm. For more information, go to https://oag.ca.gov/prop65/faqs-view-all.

A Prop 65 warning means that a company has either (1) evaluated the exposure and has concluded that it exceeds the "no significant risk level"; or (2) has chosen to provide a warning based on its understanding about the presence of a listed chemical without attempting to evaluate the exposure.

Does this law apply everywhere?

Prop 65 warnings are required under California law only. These warnings are seen throughout California in a wide range of settings, including but not limited to restaurants, grocery stores, hotels, schools, and hospitals, and on a wide variety of products. Additionally, some online and mail order retailers provide Prop 65 warnings on their websites or in catalogs.

How do the California warnings compare to federal limits?

Prop 65 standards are often more stringent than federal and international standards. There are various substances that require a Prop 65 warning at levels that are far lower than federal action limits. For example, the Prop 65 standard for warnings for lead is 0.5 µg/day, which is well below the federal and international standards.

Why don't all similar products carry the warning?

- Products sold in California require Prop 65 labelling while similar products sold elsewhere do not.
- A company involved in a Prop 65 lawsuit reaching a settlement may be required to use Prop 65 warnings for its products, but other companies making similar products may have no such requirement.
- The enforcement of Prop 65 is inconsistent.
- Companies may elect not to provide warnings because they conclude that they are not required to do so under Prop 65; a lack of warnings for a product does not mean that the product is free of listed chemicals at similar levels.

Why does Toro include this warning?

Toro has chosen to provide consumers with as much information as possible so that they can make informed decisions about the products they buy and use. Toro provides warnings in certain cases based on its knowledge of the presence of one or more listed chemicals without evaluating the level of exposure, as not all the listed chemicals provide exposure limit requirements. While the exposure from Toro products may be negligible or well within the "no significant risk" range, out of an abundance of caution, Toro has elected to provide the Prop 65 warnings. Moreover, if Toro does not provide these warnings, it could be sued by the State of California or by private parties seeking to enforce Prop 65 and subject to substantial penalties.



Count on it.