PRORUN®

GAS///

Operator's Manual

HANDHELD BLOWER

MODEL: PHB2415

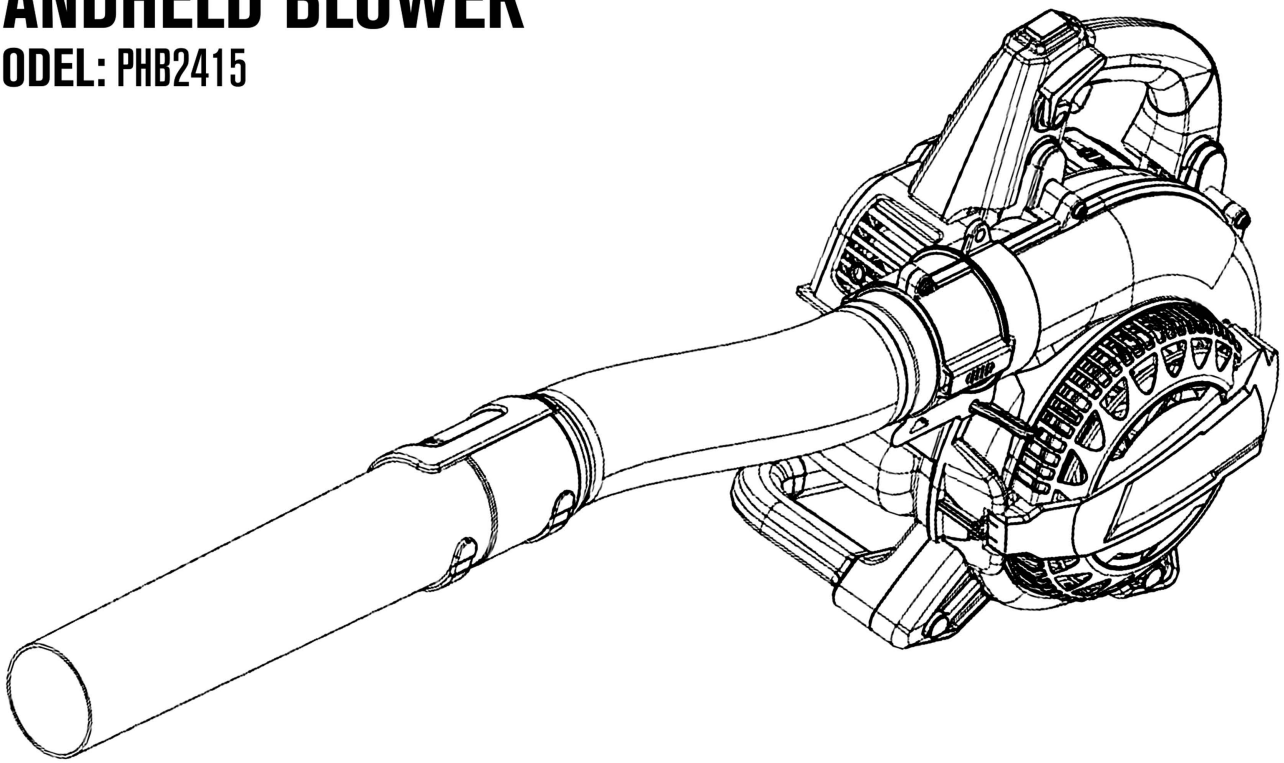

Everything PRORUN

Before operating, read the instructions.

⚠ **IMPORTANT - READ CAREFULLY BEFORE USE**

⚠ **IMPORTANT SAFETY INSTRUCTIONS – SAVE THESE INSTRUCTIONS**

WARNING: To reduce the risk of injury, the user must read and understand the Operator's Manual before using this product. Save these instructions for future reference.

Please let us know what you think.
To leave a review and see our full line of products, visit:

proruntech.com ★★★★★

1-844-905-0882, info@proruntech.com

Version: B - Issue Date: 2023/03/31

Table of Content

Safety 2
Setup.....9
Operation.....11
Maintenance.....14
Troubleshooting 18
Specification.....20
Part List and Diagram.....21
Warranties.....24

Safety

WARNING SYMBOLS AND DEFINITIONS	
	This is the safety alert symbol. It is used to alert you to potential personal injury hazards. Obey all safety messages that follow this symbol to avoid possible injury or death.
⚠DANGER	Indicates a hazardous situation which, if not avoided, will result in death or serious injury.
⚠WARNING	Indicates a hazardous situation which, if not avoided, could result in death or serious injury.
⚠CAUTION	Indicates a hazardous situation which, if not avoided, could result in minor or moderate injury.
NOTICE **CAUTION**	Addresses practices not related to personal injury.

Symbol Definitions

Symbol	Property or Statement
	WARNING! Read the operator's manual(s) and follow all warnings and safety instructions. Failure to do so can result in serious injury to the operator and/or by standers.
	Bewar of thrown or blown objects, dust or other debris. Keep all persons away from the work area whilst using.
	If you are using the machine every day in normal conditions, you can be exposed to a noise level of 85 dB (A) or higher. Wear safety glasses and hearing protection.
	Wear gloves and protective footwear!

Symbol	Property or Statement
	Danger of dismemberment! Never use the machine with the grille open. Don't put your hand into the volute or tube.
	Fuel mixture tank
 	Close the choke Open the choke
H L T	The screw under the "H" stamp is The High-speed mixture adjustment screw. The screw under the "L" stamp is The Low-speed mixture adjustment screw. The screw up the "T" stamp is the idle speed adjustment screw.
I O	Operate the engine switch Flipping the switch to the "O" position, immediately the engine stops.
	The port to location of Spark Plug.
	Press the direction of the Primer Bulb.

IMPORTANT SAFETY INSTRUCTION

SAVE THESE INSTRUCTION

This manual contains important instructions that should be followed during setup, operation and maintenance of the Blower.

Set up Precautions

1.Gasoline fuel and fumes are flammable, and potentially explosive. Use proper fuel storage and handling procedures. Do not store fuel or other flammable materials nearby.

2.Have multiple ABC class fire extinguishers nearby.

3.Operation of this equipment may create sparks that can start fires around dry vegetation.

A spark arrestor may be required. The operator should contact local fire agencies for laws or regulations relating to fire prevention requirements

4.Set up and use only on a flat, level, well-ventilated surface.

5.Wear ANSI-approved safety goggles, heavy-duty work gloves, and dust mask/respirator during use.

6.Use only lubricants and fuel recommended in the Specifications chart of this manual.

General Safety Instructions

⚠WARNING

To reduce the risk of fire, or injury:

1.**Personal Protective Equipment.** To reduce the risk of hearing loss associated with sound levels, hearing protection is required. To reduce the risk of injury associated with thrown objects, always wear eye protection. Eye protection should meet the requirements of ANSI Z87.1. To reduce the risk of injury associated with the inhalation of dust, use a face filter mask in dusty conditions.

2.**Physical Condition of Operator.** Do not operate this unit when tired, ill, or under the influence of alcohol, drugs, or medication.

3.**Clothing Recommendation.** Always wear heavy, long pants, boots, gloves, and a long-sleeve shirt. To reduce the risk of injury associated with objects being drawn into rotating parts, do not wear loose clothing, scarves, jewelry, etc. Secure hair so it is above shoulder level.

4.**Condition of Unit before Use.** Inspect unit before each use. Replace damaged parts. Check for fuel leaks. Make sure all visible fasteners are in place and secure. Make sure attachments are properly installed and securely fastened. Be sure guards are properly attached and in the position recommended by the manufacturer.

5.**Proper Stance.** Keep firm footing and balance. Do not over-reach. Keep all parts of your body away from hot surfaces.

6.**Exhaust Gases.** Never start or run the unit inside a closed room or building; breathing exhaust fumes can kill.

7. **Fueling.** Mix and pour fuel outdoors where there are no sparks or flames. Slowly remove the fuel cap only after stopping the engine. Do not smoke while fueling or mixing fuel. Wipe spilled fuel from the unit. Move at least 3 m (10 ft) away from the fueling source and site before

starting engine. Always store gasoline in a container approved for flammable liquids.

8.**Work Area.** Clear the area of children, bystanders, and pets. At a minimum, keep all children, bystanders, and pets outside a 15 m (50 ft) radius; outside the 15 m (50 ft) zone, there is still a risk of injury from thrown objects. Bystanders should be encouraged to wear eye protection. If you are approached, stop the engine.

9.**Work from Ladders or on High Surfaces.** Work from ladders or high places (such as roofs) is prohibited and could result in severe injury.

10.**Transportation and Storage of the Unit.** The operator's manual should provide transportation and long- and short-term storage instructions.

11.**Service Work.** To reduce the risk of injury associated with contacting rotating parts, stop the engine before installing or removing attachments. Do not operate without guards in place. Always disconnect the spark plug before performing maintenance or accessing movable parts.

12.**Additional Operating Recommendations for Blowers and Blower-Vacuums.** Operate power equipment only at reasonable hours--not early in the morning or late at night when people might be disturbed. Comply with times listed in local ordinances. To reduce sound levels, limit the number of pieces of equipment used at any one time. Operate blowers at the lowest possible engine speed to do the job. Use rakes and brooms to loosen debris before blowing. In dusty conditions, slightly dampen surfaces or use mister attachment when water is available. Conserve water by using blowers instead of hoses for many lawn and garden applications, including areas such as gutters, screens, patios, grills, porches, and gardens. Avoid blowing debris towards people, pets, open windows, or cars when using unit. Use the full blower nozzle extension when blowing.

13.After using blowers and other equipment, CLEAN UP! Dispose of debris in trash receptacles.

14.Do not allow to be used as a toy. Close attention is necessary when used by or near children.

15.Use only as described in this manual. Use only manufacturer′s recommended attachments.

16.If appliance is not working as it should, has been dropped, damaged, left outdoors, or dropped into water, return it to a service center.

17.Do not handle appliance with wet hands.

18.Do not put any object into openings. Do not use with any opening blocked; keep free of dust, lint, hair, and anything that may reduce air flow.

19.Keep hair, loose clothing, fingers, and all parts of body away from openings and moving parts.

20.Use extra care when cleaning on stairs.

21.Do not use to pick up flammable or combustible liquids, such as gasoline, or use in areas where they may be present.

22.Do Not Use In Rain.

23.Wear ANSI-approved safety goggles,hard hat and heavy-duty rubber work gloves. Use face or dust

mask if operation is dusty.
24.Use Right Appliance - Do not use appliance for any job except that for which it is intended.
25.Do Not Force Appliance - It will do the job better and with less likelihood of injury at the rate for which it was designed.
26.Do not Overreach - Keep proper footing and balance at all times.
27.Stay Alert - Watch what you are doing. Use common sense. Do not operate appliance when you are tired.
28.Store Idle Appliances Indoors - When not in use, appliances should be stored indoors in dry, and high or locked-up place - out of reach of children.
29.Maintain Appliance With Care. Follow instructions for lubricating and changing accessories. Keep handles dry, clean, and free from oil and grease.
30.Check Damaged Parts - Before further use of the appliance, a guard or other part that is damaged should be carefully checked to determine that it will operate properly and perform its intended function. Check for alignment of moving parts, binding of moving parts, breakage of parts, mounting, and any other condition that may affect its operation. A guard or other part that is damaged should be properly repaired or replaced by a qualified technician unless indicated elsewhere in this manual.
31.Remove all hard objects from work area.
Do not blow debris in the direction of people, animals or property.
32.Use only accessories provided.
33.Maintain labels and nameplates on the appliance. These carry important safety information. If unreadable or missing, contact dealer for a replacement.
34.People with pacemakers should consult their physician(s) before use. Electromagnetic fields in close proximity to heart pacemaker could cause pacemaker interference or pacemaker failure.The warnings, precautions, and instructions discussed in this instruction manual cannot cover all possible conditions and situations that may occur.
It must be understood by the operator that common sense and caution are factors which cannot be built into this product, but must be supplied by the operator.

Operating Precautions

1.Keep children away from the equipment, especially while it is in use.
2.Keep all spectators at least fifiteen feet from the Engine during operation.
3.Fire Hazard! Do not fill fuel tank while engine is running. Do not operate if gasoline has been spilled. Clean spilled gasoline before starting engine. Do not operate near pilot light or open flame.
4.Do not touch engine during use. Allow engine to cool down after use.
5.Never store fuel or other flammable materials near the engine.

6.Secure the equipment on transport vehicles to prevent it from rolling, slipping, and tilting.
7.Industrial applications must follow OSHA requirements.
8.Do not leave the equipment unattended when it is running. Turn off the equipment before leaving the work area.
9.The equipment can produce high noise levels.
Prolonged exposure to noise levels above 85 dBA is hazardous to hearing. Wear ear protection when operating or when working nearby while it is operating.
10.Wear ANSI-approved safety glasses and hearing protection during use.
11.People with pacemakers should consult their physician(s) before use. Electromagnetic fields in close proximity to a heart pacemaker could cause pacemaker interference or pacemaker failure. Caution is necessary when near the engine's magneto or recoil starter.
12.Use only accessories that are recommended by manufacturer for your model. Accessories that may be suitable for one piece of equipment may become hazardous when used on another piece of equipment.
13.Do not operate in explosive atmospheres, such as in the presence of flammable liquids, gases, or dust. Gasoline-powered engines may ignite the dust or fumes.
14.Stay alert, watch what you are doing and use common sense when operating this piece of equipment. Do not use while tired or under the influence of drugs, alcohol or medication.
15.Do not overreach. Keep proper footing and balance at all times. This enables better control of the equipment in unexpected situations.
16.Dress properly. Do not wear loose clothing or jewelry. Keep hair, clothing and gloves away from moving parts. Loose clothes, jewelry or long hair can be caught in moving parts.
17.Parts, especially exhaust system components, get very hot during use. Stay clear of hot parts.
18.Do not cover the equipment during operation.
19.Keep the equipment, engine, and surrounding area clean at all times.
20.Do not smoke, or allow sparks, flames, or other sources of ignition around the equipment, especially when refuelling.
21.Use the equipment, accessories, etc., in accordance with these instructions and in the manner intended for the particular type of equipment, taking into account the working conditions and the work to be performed. Use of the equipment for operations different from those intended could result in a hazardous situation.
22.Do not operate the equipment with known leaks in the engine's fuel system.
23.When spills of fuel or oil occur, they must be cleaned up immediately. Dispose of fluids and cleaning materials as per any local, state, or federal codes and regulations. Store oil rags in a bottom-ventilated, covered, metal container.
24.Keep hands and feet away from moving parts. Do not reach over or across equipment while operating.

25.Before use, check for misalignment or binding of moving parts, breakage of parts, and any other condition that may affect the equipment's operation. **If damaged, have the equipment serviced before using.** Many accidents are caused by poorly maintained equipment.
27.Use the correct equipment for the application. Do not modify the equipment and do not use the equipment for a purpose for which it is not intended.

Service Precautions

1.Before service, maintenance, or cleaning:
a.Turn the engine switch to its "OFF" position.
b.Allow the engine to completely cool.
c.Then, remove the spark plug cap from the spark plug.
2.Keep all safety guards in place and in proper working order. Safety guards include muffler, air cleaner, mechanical guards, and heat shields, among other guards.
3.**Do not alter or adjust any part of the equipment or its engine that is sealed by the manufacturer or distributor. Only a qualified service technician may adjust parts that may increase or decrease governed engine speed.**
4.Wear ANSI-approved safety goggles, heavy-duty work gloves, and dust mask/respirator during service.
5.Maintain labels and nameplates on the equipment.
These carry important information.
If unreadable or missing, contact dealer for a replacement.
6.Have the equipment serviced by a qualified repair person using only identical replacement parts. This will ensure that the safety of the equipment is maintained. Do not attempt any service or maintenance procedures not explained in this manual or any procedures that you are uncertain about your ability to perform safely or correctly.
7.Store equipment out of the reach of children.
8.Follow scheduled engine and equipment maintenance.

Refueling:

1.Do not refill the fuel tank while the engine is running or hot.
2.Do not smoke, or allow sparks, flames, or other sources of ignition around the equipment, especially when refuelling.
3.**Do not fill fuel tank to the top.** Leave a little room for the fuel to expand as needed, at least 1″ from top of the neck. TO PREVENT FUEL LEAKAGE AND FIRE HAZARD, do not fill fuel above the bottom of the threads.
4.Refuel in a well-ventilated area only.
5.Wipe up any spilled fuel and allow excess to evaporate before starting engine. To prevent FIRE, do not start the engine while the smell of fuel hangs in the air.

Set Up

Read the ENTIRE IMPORTANT SAFETY INFORMATION section at the beginning of this manual including all text under subheadings therein before set up or use of this product.

⚠WARNING

TO PREVENT SERIOUS INJURY:

Operate only with proper spark arrestor installed.

Operation of this equipment may create sparks that can start fires around dry vegetation.
A spark arrestor may be required.
The operator should contact local fire agencies for laws or regulations relating to fire prevention requirements.

Assembling Blower Tube

1.Insert the Main Tube into the arm of the Blower. Make sure Tube's side latch is properly aligned with the arm for a secure fit.

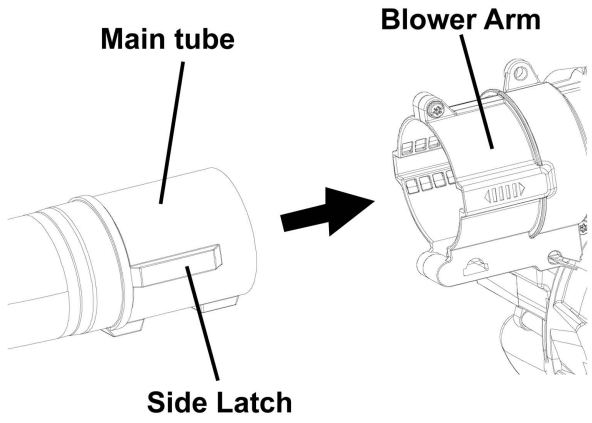

2.Connect Extension Nozzle to Main Tube and rotate 90 degrees clockwise until tubes click together securely.

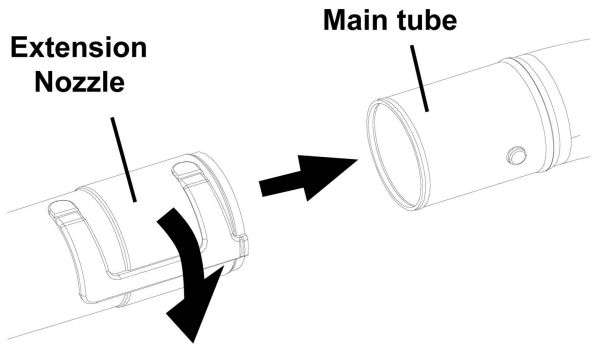

Note: Choose between the Tapered Nozzle or Round Nozzle extensions depending on the type of work to be done.

3.To release Main Tube from the blower arm, insert screwdriver (included with Tool Kit) into hole at the bottom of blower arm.

4.Push in firmly until Tube easily releases from the arm.

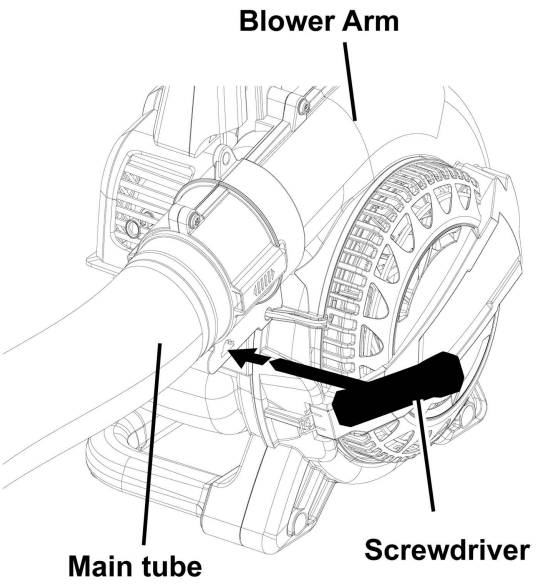

Components and Controls

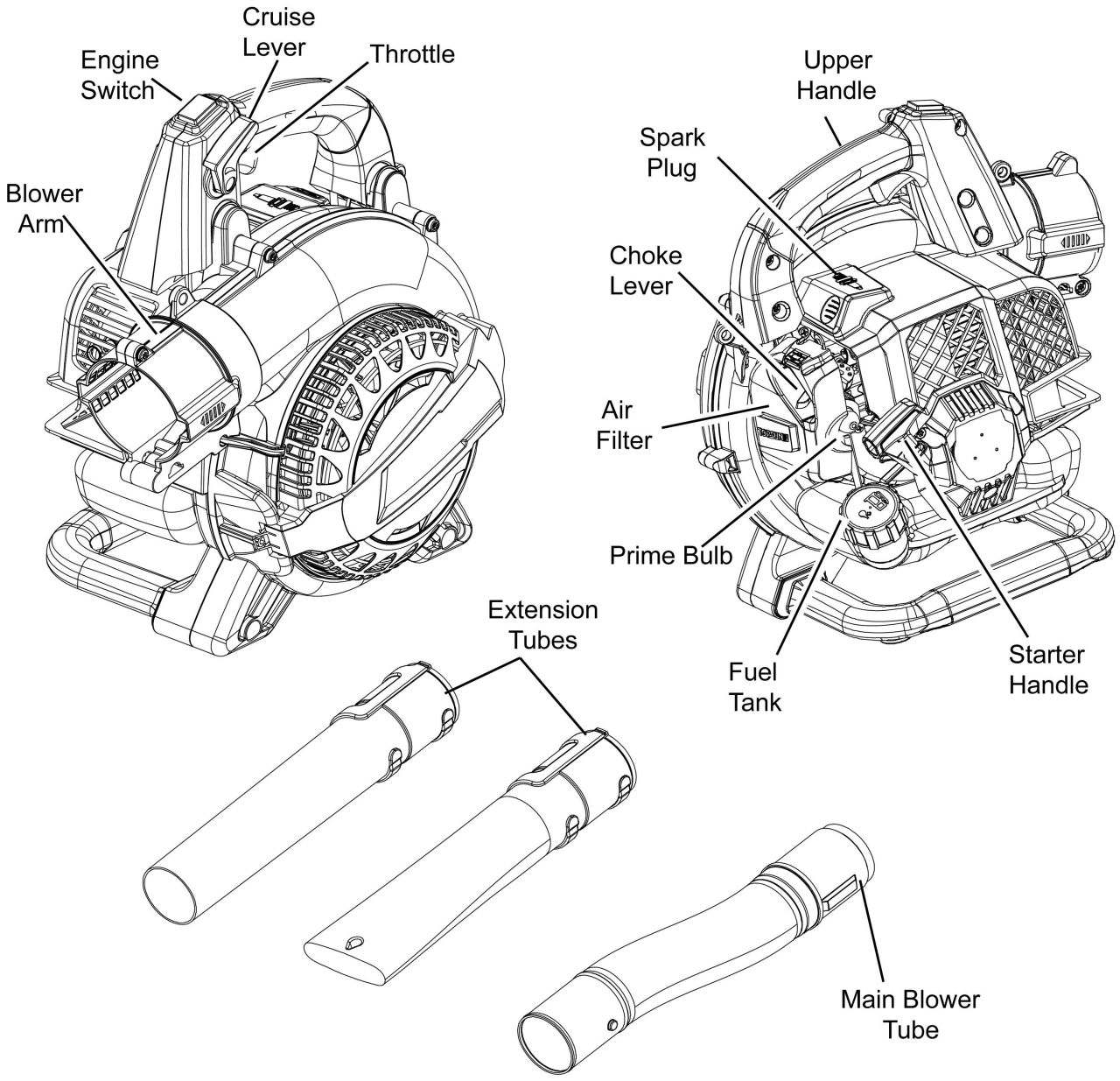

Operation

Read the <u>ENTIRE</u> IMPORTANT SAFETY INFORMATION section at the beginning of this manual including all text under subheadings therein before set up or use of this product.

Checking before Starting

Inspect engine and equipment looking for damaged, loose, and missing parts before set up and starting. If any problems are found, do not use equipment until fixed properly.

Checking and Filling Fuel



<u>WARNING!</u> TO PREVENT SERIOUS INJURY FROM FIRE: Fill the fuel tank in a well-ventilated area away from ignition sources. If the engine is hot from use, shut the engine off and wait for it to cool before adding fuel. Do not smoke.

1.Clean the Fuel Tank Cap and the area around it.
2. Unscrew and remove the Fuel Tank Cap.
<u>Note:</u> Do not use gasoline containing more than 10% ethanol (E10). Do not use E85 ethanol. Add fuel stabilizer to the gasoline or the Warranty is VOID.
<u>Note:</u> Do not use gasoline that has been stored in a metal fuel container or a dirty fuel container. It can cause particles to enter the carburetor, affecting engine performance and/or causing damage.
<u>IMPORTANT:</u> Your Warranty is VOID if the Engine's Fuel Tank is not filled with the proper mixture (50:1) of unleaded gasoline and 2-cycle oil before each use.
2-Stroke oil must meet either JASO M345 FD or ISO-L-EGD requirements for air-cooled engines, synthetic.
Before each use, check the fuel level. Do not run the Engine with an improper unleaded gasoline/2-cycle oil mixture. Running the Engine with an improper mixture WILL permanently damage the Engine.

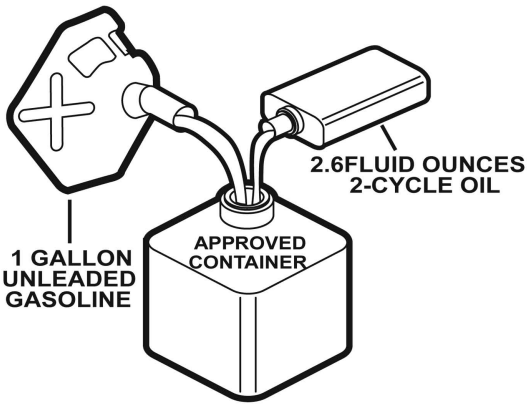

Figure 7: Fuel-Oil Mixture

3.To obtain the proper gasoline and 2-cycle oil mixture, mix **2.6 fluid ounces of 2-cycle oil with 1 gallon of unleaded gasoline** into an approved container. Then gently agitate the container to thoroughly mix the gasoline/2-cycle oil.
4.If needed, fill the Fuel Tank to about 1 inch under the fill neck of the Fuel Tank with the pre-mixed unleaded gasoline/2-cycle oil mixture.
5.Then replace the Fuel Tank Cap.
6.Wipe up any spilled fuel and allow excess to evaporate before starting engine. To prevent FIRE, do not start the engine while the smell of fuel hangs in the air.
7.Use caution when handling fuel. Move the blower at least 10 feet (3 m) from the fueling point before starting the engine.

Starting the Engine

<u>Before Starting the Engine</u>

Before starting the engine:
a. Inspect the equipment and engine.
b. Fill the engine with the proper amount and type of unleaded gasoline and 2-cycle oil mixture.
c. Fill the oil tank with the proper amount and type of bar and chain oil.

Manual Start

A “cold start” is when the engine is no longer hot to the touch, typically at least 30 minutes after it has last been run or the first start of the day.

1.To start a cold Engine, first make sure the Cruise Lever is in the downward position.

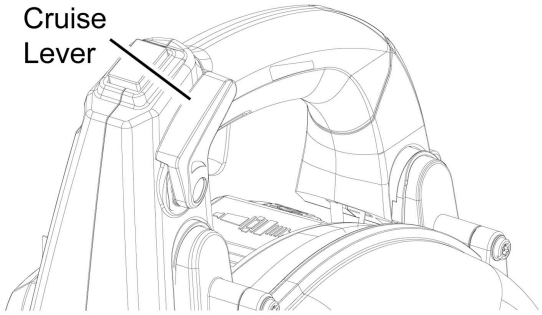

2.Press Primer Button 10 times to prime the carburetor.

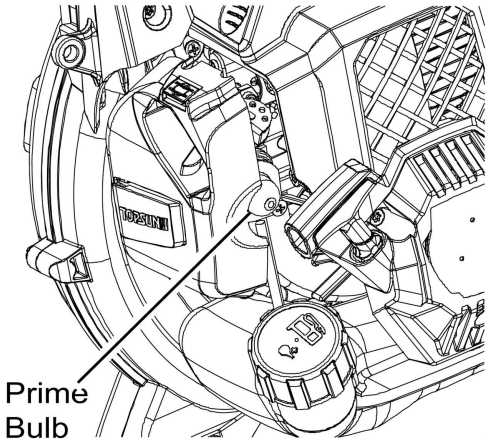

3.Move Choke Lever to the START position.
Note: The symbols below are indicated on the tool near the Choke Lever.

= START = RUN

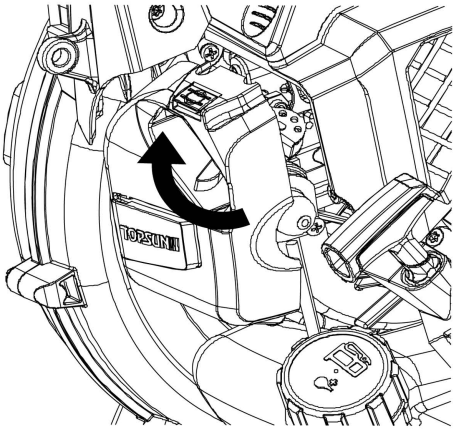

4.Use one hand to securely hold the unit against the ground.

5.Grip the Starter Handle of the Engine firmly and pull it rapidly until the engine attempts to start and stalls.

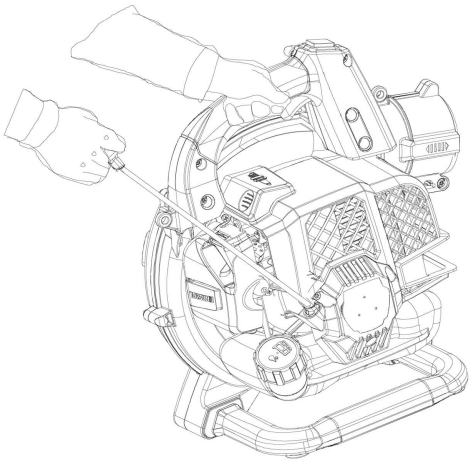

6.Move the Choke Lever to the RUN position. This will partially engage the Throttle to assist with starting.

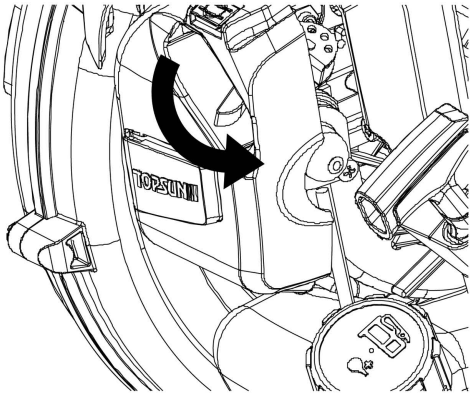

7.Pull the Starter Handle rapidly until the engine starts.

Note: Do not let the Starter Handle snap back against the engine.
Hold it as it recoils so it doesn't hit the engine.

8.Allow the Engine to run at partial throttle for 15 seconds.

9.Quickly press and then release Throttle to disengage Throttle Assist mode and allow the Engine to return to idle.

Note: Moving the Choke Lever too fast could stall engine.

10.Allow Engine to warm up at idle for 60 seconds before using so that the Engine can stabilize.

11.Adjust the Throttle as needed.

Hot Start

To initiate a Hot Start, follow each step of the Cold Start procedure EXCEPT Step 5.

Stopping the Engine

1.To stop the engine in an emergency, press the Power Switch to shut the engine off immediately.

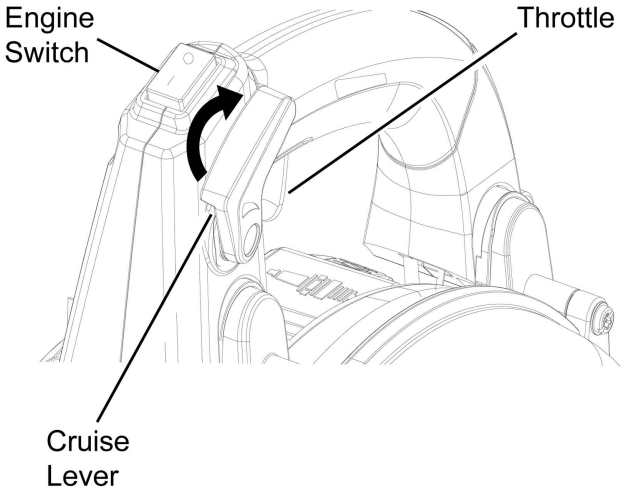

2.Under normal conditions, use the following procedure:

a. Release the Throttle and move Cruise Lever back to idle position.

b. Let Engine idle for 3 – 5 minutes.

c. Press the Stop Engine Switch.

NOTICE
See Long-Term Storage on page 16 for complete storage instructions.

General Operating Instructions

Operating the Blower

1.Grip the Upper Handle with your right hand and squeeze the Throttle.

2.Use Cruise Lever to adjust speed depending on the type of work being done.

3.Operate Blower at low speed for light material.

4.Operate Blower at medium speed to move grass clippings and small leaves on pavement or a solid surface.

5.Operate Blower at high speed for heavier materials like fresh snow or heavy dirt.

6.Hold the opening of the Blower as close to the ground as possible. Use the entire length of the blower tube to keep the airflow close to the ground.

7.When finished, turn off the engine as indicated in ‘Stopping the Engine.’

⚠WARNING

WARNINGTO PREVENT SERIOUS INJURY FROM ACCIDENTAL STARTING:
Turn the Power Switch of the equipment to its "OFF" position, wait for the engine to cool, and disconnect the spark plug cap before performing any inspection, maintenance, or cleaning procedures.
TO PREVENT SERIOUS INJURY FROM EQUIPMENT FAILURE:
Do not use damaged equipment. If abnormal noise, vibration, or excess smoking occurs, maintenance procedures, including any not detailed in this manual, will need to be performed by a qualified technician for safety. If you have any doubts about your ability to safely service the equipment or engine, have a qualified technician service the equipment instead.

Cleaning, Maintenance, and Lubrication

Note: This maintenance schedule is intended solely as a general guide. If performance decreases or if equipment operates unusually, check systems immediately. The maintenance needs of each piece of equipment will differ depending on factors such as duty cycle, temperature, air quality, fuel quality, and other factors. If you have doubts about your ability to safely service this tool, have a qualified technician service the equipment instead.

Note: The following procedures are in addition to the regular checks and maintenance explained as part of the regular operation of the engine and equipment.

Procedure	Before Each Use	Monthly or every 10 hr. of use	Every 3 mo. or 20 hr. of use	Every 6 mo. or 50 hr. of use	Yearly or every 100 hr. of use	Every 2 Years
Brush off outside of engine	✓					
Check engine fuel/oil mixture level	✓					
Change fuel filter					✓	✓
Clean air filter			✓*	✓	✓	✓
Check and clean spark plug				✓	✓	✓
Check/adjust idle speed	✓					
1. Clean fuel tank and carburetor 2. Clean carbon build-up from combustion chamber					✓**	✓**
Replace fuel line if necessary						✓**

* Service more frequently when used in dusty areas.
** These items should be serviced by a qualified technician.

Checking and Filling Fuel



⚠WARNING! TO PREVENT SERIOUS INJURY FROM FIRE: Fill the fuel tank in a well-ventilated area away from ignition sources. If the engine is hot from use, shut the engine off and wait for it to cool before adding fuel. Do not smoke.

1.Clean the Fuel Tank Cap and the area around it.

2.Unscrew and remove the Fuel Tank Cap.

Note: Do not use gasoline containing more than 10% ethanol (E10). Do not use E85 ethanol. Add fuel stabilizer to the gasoline or the Warranty is VOID.

Note: Do not use gasoline that has been stored in a metal fuel container or a dirty fuel container. It can cause particles to enter the carburetor, affecting engine performance and/or causing damage.

IMPORTANT: Your Warranty is VOID if the Engine's Fuel Tank is not filled with the proper mixture (50:1) of unleaded gasoline and 2-cycle oil before each use.
2-Stroke oil must meet either JASO M345 FD or ISO-L-EGD requirements for air-cooled engines, synthetic.
Before each use, check the fuel level. Do not run the Engine with an improper unleaded gasoline/2-cycle oil mixture. Running the Engine with an improper mixture WILL permanently damage the Engine.

3.To obtain the proper gasoline and 2-cycle oil mixture, mix **2.6 fluid ounces of 2-cycle oil with 1 gallon of unleaded gasoline** into an approved container. Then gently agitate the container to thoroughly mix the gasoline/2-cycle oil.

4.If needed, fill the Fuel Tank with the pre-mixed unleaded gasoline/2-cycle oil mixture. Do not fill fuel above the bottom of the Fuel Tank fill neck.

5.Then replace the Fuel Tank Cap.

6.Wipe up any spilled fuel and allow excess to evaporate before starting engine. To prevent FIRE, do not start the engine while the smell of fuel hangs in the air.

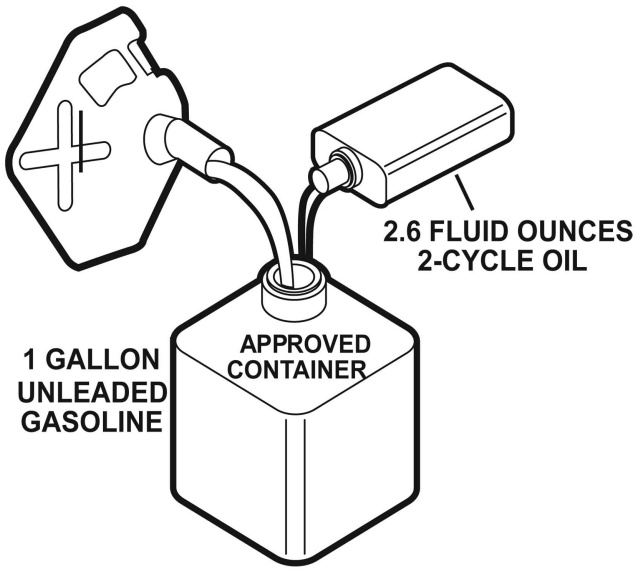

Spark plug Maintenance

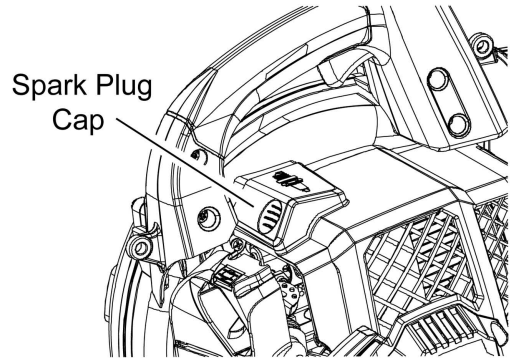

1.Disconnect Spark Plug Cap from end of plug. Clean out debris from around Spark Plug.

2.Using a spark plug wrench, remove the Spark Plug.

3.Inspect the Spark Plug: If the electrode is oily, clean it using a clean, dry rag.
If the electrode has deposits on it, polish it using emery paper. If the white insulator is cracked or chipped, the spark plug needs to be replaced.

Recommended Spark Plugs	
Bosch®	L8RTF
Champion®	RCJ7Y
TORCH®	L7RTC
NGK®	BPMR7A

NOTICE: Using an incorrect spark plug may damage the engine.
4.When installing a new spark plug, adjust the plug's gap to the specification on the Specifications chart. Do not pry against the

Specifications chart. Do not pry against the electrode, the spark plug can be damaged.
5.
Install the new spark plug or the cleaned spark plug into the engine.

• **Gasket-style**:
Finger-tighten until the gasket contacts the cylinder head, then tighten about 1/2-2/3 turn more.

• **Non-gasket-style**:
Finger-tighten until the plug contacts the cylinder head, then tighten about 1/16 turn more.

NOTICE: Tighten the Spark Plug properly. If loose, the Spark Plug will cause the engine to overheat.
If overtightened, the threads in the engine block will be damaged.

6.Apply dielectric spark plug boot protector (not included) to the end of the spark plug and reattach the cap securely.

Air Filter Maintenance

1. Remove the Air Filter Cover and the Air Filter and check for dirt. Clean or replace as described below.

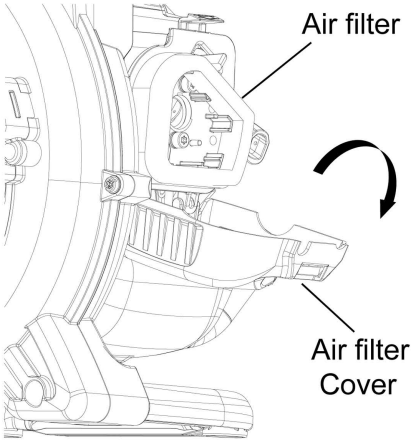

2.To prevent injury from dust and debris, wear ANSI-approved safety goggles, NIOSH-approved dust mask/respirator, and heavy-duty work gloves. Remove dust on the Filter surface by tapping a corner of the Filter against a hard surface. In a well-ventilated area away from bystanders, use pressurized air to blow dust out of the Filter from the inside.

3.Install the new or cleaned filter. Reinstall and secure the Air Filter Cover before use.

Fuel Filter Maintenance

1.Clean the Fuel Tank Cap and the area around it.

2.Remove the Fuel Tank Cap from the Fuel Tank.

3.Use a suction pump (not included) to pump any fuel in the Tank into a proper gasoline container.

4.Use a piece of wire with a hook on one end to carefully extract the Fuel Filter from the Tank.

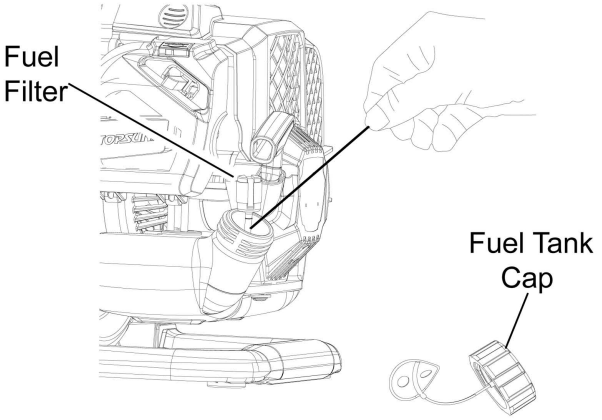

5.Remove used filter from fuel line. Attach a new filter to the fuel line and reinsert into the Fuel Tank.

6.Replace Fuel Tank Cap and tighten securely.

Long-Term Storage

When the equipment is to remain idle for longer than 20 days, prepare the Engine for storage as follows:

1. **CLEANING:**
Wait for Engine to cool, then clean Engine with dry cloth. **NOTICE: Do not clean using water.** The water will gradually enter the Engine and cause rust damage. Apply a thin coat of rust preventive oil to all metal parts.

2. **FUEL:**
To protect the fuel system during storage, follow this procedure:
a.Carefully drain any remaining fuel in the fuel tank into an appropriate storage container.

b.Press the Primer Bulb 10 times.

c.Drain any residual fuel into storage container.

d.Start the Blower.

e.Allow engine to run at idle until Blower stalls from lack of fuel.
f.Replace Fuel Cap and tighten.



⚠ **WARNING! TO PREVENT SERIOUS INJURY FROM FIRE:** Drain the Fuel Tank in a well-ventilated area away from ignition sources. If the Engine is hot from use, shut the Engine off and wait for it to cool before draining fuel. Do not smoke.

3.**LUBRICATION:**
a.Clean out area around spark plug. Remove spark plug and pour 1/2 tablespoon of 2-stroke engine oil into cylinder through spark plug hole.

b.Replace spark plug, but leave spark plug cap disconnected.

c.Pull Starter Handle to distribute oil in cylinder. Stop after one or two revolutions when you feel the piston start the compression stroke (when you start to feel resistance).

4.**STORAGE AREA:**
Cover and store in a dry, level, well-ventilated area out of reach of children. Storage area should also be away from ignition sources, such as water heaters, clothes dryers, and furnaces.
5.**AFTER STORAGE:**
Before starting the Engine during or after storage, keep in mind that untreated gasoline will deteriorate quickly. Change to fresh fuel if untreated gasoline has been sitting for a month, if treated gasoline has been sitting beyond the fuel stabilizer's recommended time period, or if the Engine does not start.

Troubleshooting

Problem	Possible Causes	Probable Solutions
Engine will not start	FUEL RELATED: 1.No fuel in tank.	FUEL RELATED: 1.Fill fuel tank with fresh 87+ octane stabilizer-treated unleaded gasoline/oil mixture only. **Do not use gasoline with more than 10% ethanol (E15, E20, E85, etc.).**
	2.Choke not in START position, cold engine.	2.Move Choke to START position.
	3. Gasoline with more than 10% ethanol used. (E15, E20, E85, etc.)	3.Clean out ethanol-rich gasoline from fuel system. Replace components damaged by ethanol. Use fresh 87+ octane stabilizer-treated unleaded gasoline/oil mixture only. **Do not use gasoline with more than 10% ethanol (E15, E20, E85, etc.).**
	4.Low quality or deteriorated, old gasoline/oil mixture.	4.Use fresh 87+ octane stabilizer-treated unleaded gasoline/oil mixture. **Do not use gasoline with more than 10% ethanol (E15, E20, E85, etc.).**
	5.Carburetor not primed.	5.Press the Prime Bulb several times to prime.
	6.Dirty fuel passageways.	6.Clean out passageways using fuel additive. Heavy deposits may require further cleaning.
	7.Carburetor is flooded.	7.Turn Choke Knob to RUN position. Pull Starter Handle 10-20 times to clear out Carburetor, then attempt to start with normal process.
	8.Clogged Fuel Filter.	8.Clean or replace Fuel Filter.
	IGNITION (SPARK) RELATED: 1.Spark plug cap not connected securely.	IGNITION (SPARK) RELATED: 1.Connect spark plug cap properly.
	2.Spark plug electrode wet or dirty.	2.Clean spark plug.
	3.Incorrect spark plug gap.	3.Correct spark plug gap.
	4.Spark plug cap broken.	4.Replace spark plug cap.
	5.Incorrect spark timing or faulty ignition system.	5.Have qualified technician diagnose/repair ignition system.
	COMPRESSION RELATED: 1.Cylinder not lubricated. Problem after long storage periods.	COMPRESSION RELATED: 1.Pour 1/2 tablespoon of oil into spark plug hole. Crank engine a few times and try to start again.
	2.Loose or broken spark plug. (Hissing noise will occur	2.Tighten spark plug. If that does not work, replace spark plug.

Follow all safety precautions whenever diagnosing or servicing the equipment or engine.

Problem	Possible Causes	Probable Solutions
Engine misfires	1.Spark plug cap loose. 2.Incorrect spark plug gap or damaged spark plug. 3.Defective spark plug cap. 4.Old or low quality gasoline/oil mixture. 5.Incorrect compression.	1.Check cap and wire connections. 2.Re-gap or replace spark plug. 3.Replace spark plug cap. 4.Use only fresh 87+ octane stabilizer-treated unleaded gasoline/oil mixture. **Do not use gasoline with more than 10% ethanol (E15, E20, E85, etc.).** 5.Diagnose and repair compression. (Use Engine will not start: COMPRESSION RELATED section.)
Engine stops suddenly	1.Fuel tank empty or full of impure or low quality gasoline/oil mixture. 2.Defective breather valve creating vacuum, preventing proper fuel flow. 3.Faulty magneto. 4.Disconnected or improperly connected spark plug cap.	1. Fill fuel tank with fresh 87+ octane stabilizer-treated unleaded gasoline/oil mixture. **Do not use gasoline with more than 10% ethanol (E15, E20, E85, etc.).** 2.Test/replace breather valve. 3.Have qualified technician service magneto. 4.Secure spark plug cap.
Engine stops when under heavy load	1.Dirty air filter 2.Engine running cold.	1.Clean element. 2.Allow engine to warm up prior to operating equipment.
Engine knocks	1.Old or low quality gasoline/oil mixture. 2.Engine overloaded. 3.Incorrect spark timing, deposit buildup, worn engine, or other mechanical problems.	1.Fill fuel tank with fresh 87+ octane stabilizer-treated unleaded gasoline/oil mixture. **Do not use gasoline with more than 10% ethanol (E15, E20, E85, etc.).** 2.Do not exceed equipment's load rating. 3.Have qualified technician diagnose and service engine.

Follow all safety precautions whenever diagnosing or servicing the equipment or engine.

Specifications.

Displacement		25.4cc
Engine Type		Single Cylinder 2-stroke
Power Output		0.75kW
Cooling System		Forced air cooled
Fuel	Type	87+ octane stabilizer-treated unleaded gasoline containing no more than 10% ethanol (E10) mixed with 2-Stroke oil (see below)
	Capacity	16.1 fl. oz.
Oil	Type	2-Stroke oil must meet either JASO M345 FD or ISO-L-EGD requirements for air-cooled engines, synthetic
	Ratio	50:1 gasoline-to-oil ratio 2.6 oz oil per gallon of gasoline
Bore x Stroke		34 mm x 28 mm
Compression Ratio		7 :1
Spark Plug	Type	Champion® RCJ7Y / Bosch® L8RTF NGK® BPMR7A / TORCH® L7RTC
	Gap	0.02"
Speed	Idle	3000 ± 400 RPM
	Maximum	7500 RPM
Rotation viewed from PTO (power takeoff - the output shaft)		Counterclockwise
Sound Level at 50 feet		68 dB
Run Time @ full throttle		50 minutes

Parts List and Diagram

Part List

NO	DESCRIPTION	QTY
1	Screw ST4.2*12	3
2	Top Cover	1
3	Cap Screw M5*16	3
4	Starter cover	1
5	Starter grip	1
6	Wahser Φ5.5*Φ16*1.5	1
7	Spiral Spring	1
8	Starter Rope φ2.5x800	1
9	Starter Pulley	1
10	Easy Spring	1
11	Starter Pawl	1
12	Wahser φ5XΦ11X2	1
13	Screw ST5*16	1
14	Starter Pulley Ass'y	1
15	Oil seal Φ12xΦ22x7	1
16	Smaller crankcase	1
17	Pin	2
18	Ball Bearing 6001/P5	1
19	Gasket	1
20	Ball Bearing 6001/P5	1
21	Crankshaft/Conn.Rod Ass'y	1
22	Bigger crankcase	1
23	Oil seal Φ12xΦ22x7	1
24	Cap Screw M5*28	3
25	Woodruff Key 3x3.7x10	1
26	Holder	1
27	Ignition Coil Ass'y	1
28	Switch Line	1
29	Rotor/ Fan	1
30	Cap Screw M5*25	2
31	Nut M8×1	1
32	Shaft	1
33	Cap Screw M6*20	2
34	Clip, Piston Pin	2
35	Piston Pin	1
36	Needle Bearing	1
37	Piston	1
38	Piston Ring	2
39	Gasket	1

NO	DESCRIPTION	QTY
40	Cylinder	1
41	Cap Screw M5*20	4
42	Sparker Plug -RCJ7Y	1
43	Cap Screw M5*60	2
44	Muffler Cover	1
45	Muffler Ass'y	1
46	Muffler Gasket	1
47	Insulator Gasket	1
48	Insulator	1
49	Cap Screw M2*22	2
50	Metal Plate	1
51	Screw M4*6	1
52	Car. Gasket	1
53	Carburetor	1
54	Air Filter Mount	1
55	Cap Screw M5*50	2
56	Filter	1
57	Air filter cover	1
58	Screw ST4.8×16	2
59	Screw ST4.8×14	3
60	Right handle	1
61	Switch clear Cover	1
62	Switch	1
63	Switch Line	1
64	Trigger	1
65	Trigger Line	1
66	Screw ST4.8×10	1
67	Speed lever	1
68	Waves Washer	2
69	Left handle	1
70	Speed Knob	1
71	Grip Rubber--Front	1
72	Grip Rubber--Rear	1
73	Anti-Spring Mount	2
74	Screw ST4.8*10	2
75	Anti-Spring	2
76	Air Duct	1
77	Down Handle	1
78	Right Fan Cvoer	1

NO	DESCRIPTION	QTY
79	Cap Screw M5*16	4
80	Fan	1
81	Wahser	1
82	Nut M8×1	1
83	Pipe Lock	1
84	Spring	1
66	Screw ST4.8×10	1
85	Left Fan Cvoer	1
86	Cover Spring	1
87	Cvoer	1
88	T25 Screw ST4.8×25	5
89	T25 Screw ST4.8×19	1
90	Fuel Tank Cap	1
91	Rubber Valve	1
92	Rubber Valve Mount	1

NO	DESCRIPTION	QTY
93	Gasket	1
94	Chain Mount	1
95	Chain	1
96	Fuel Tank	1
97	Fuel Hose Mount	1
98	Return Hose	1
99	Fuel Hose	1
100	Clip	1
101	Filter Ass'y	1
102	Fuel Tank Mount	1
103	Washer	1
104	T25 Screw ST4.8×19	1
105	Pipe (S Pipe)	1
106	Safety Fence	1
107	Blow Tube (B)	1
108	Blow Tube (A)	1

Assembly Diagram

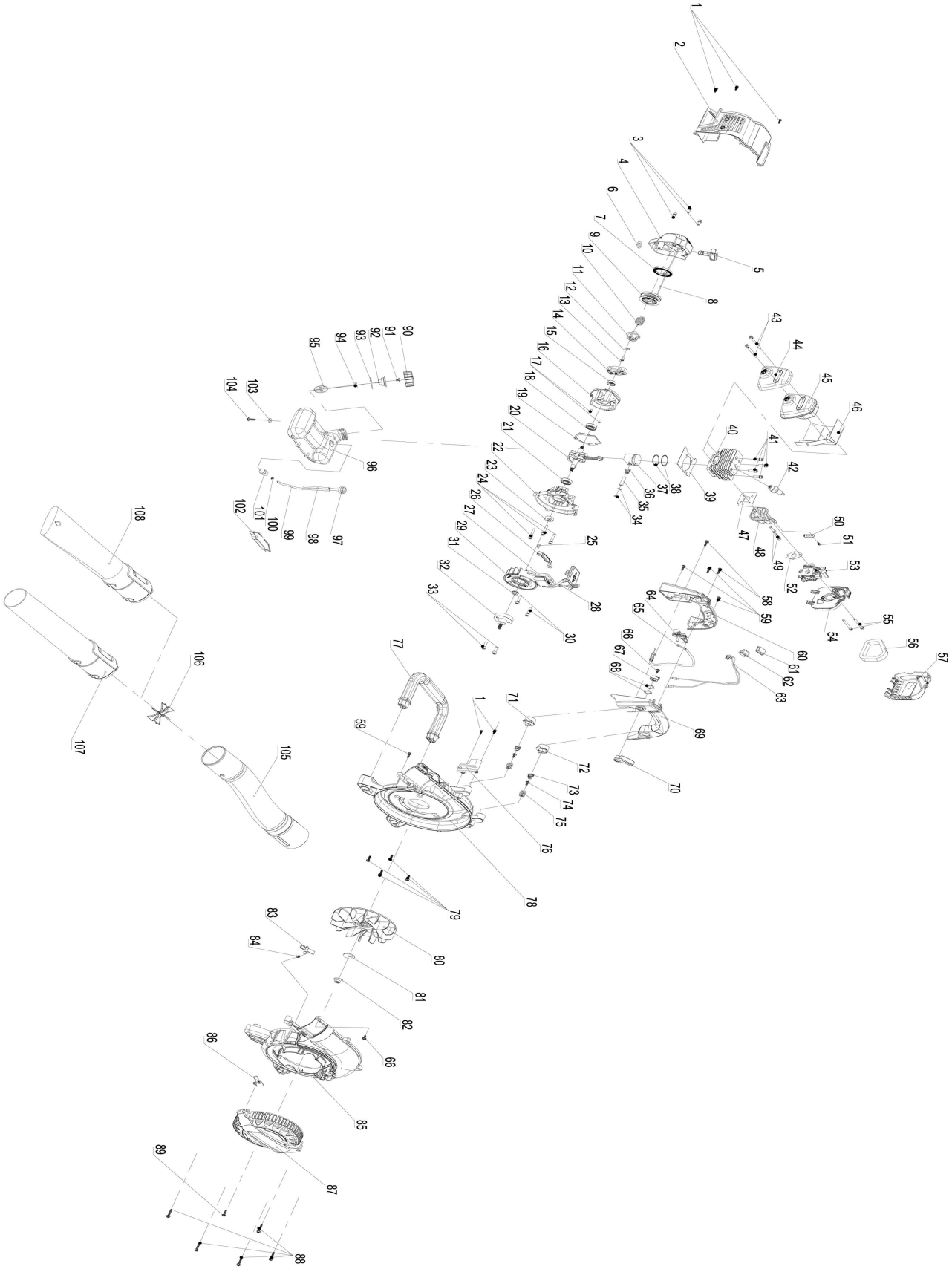

Emissions Control System Warranty

Zhejiang Zhongjian Technology Co., Ltd., CALIFORNIA AND FEDERAL EMISSION CONTROL WARRANTY STATEMENT YOUR WARRANTY RIGHTS AND OBLIGATIONS

The U.S. Environmental Protection Agency (EPA), the California Air Resources Board (CARB), and Zhejiang Zhongjian Technology Co., Ltd (hereinafter called Zhongjian), are pleased to explain the Emissions Control System Warranty on your new 2020/2021 small off-road engine. In California, new equipment that uses small off-road engines must be designed, built, and equipped to meet the state's stringent anti-smog standards. In other states, new small off-road engine must be designed, built and equipped at the time of sale to meet the U.S. EPA regulations for small off-road engines. The small off-road engine must be free from defects in materials and workmanship which cause it to fail to conform with U.S. EPA standards for the first two years of engine use from the date of sale to the ultimate purchaser. Zhongjian, must warrant the emission control system on your small off-road engine for the period of time listed above provided there has been no abuse, neglect, or improper maintenance of your small off-road engine.

Your emission control system may include parts such as the carburetor or fuel injection system, the ignition system, catalytic converters, fuel tanks, valves, filters, clamps, connectors, fuel lines, fuel caps, canisters, vapor hoses, and other associated components. Also included may be hoses, belts and connectors, and other emission-related assemblies.

MANUFACTURER'S WARRANTY COVERAGE

This 1995 and later small off-road emissions control system is warranted for two years. If any emission-related part on your engine is defective, the part will be repaired or replaced by Zhongjian.

OWNER'S WARRANTY RESPONSIBILITIES

(a) As the small off-road engine owner, you are responsible for the performance of the required maintenance listed in your operator's manual. Zhongjian, recommends that you retain all receipts covering maintenance on your small off-road engine, but Zhongjian, cannot deny warranty solely for the lack of receipts or for your failure to ensure the performance of all scheduled maintenance.

(b) As the small off-road engine owner, you should be aware, however, that Zhongjian, may deny you warranty coverage if small off-road engine or a part has failed due to abuse, neglect, improper maintenance, or unapproved modifications.

(c) You are responsible for presenting your small off-road engine to a service center as soon as a problem exists. The warranty repairs should be completed in a reasonable amount of time, not to exceed 30 days.

If you have any questions regarding your warranty rights and responsibilities, you should contact a Zhongjian, Customer Representative at [Phone Number] or [website determined by brand].

DEFECT WARRANTY COVERAGE REQUIREMENTS:

(a) The warranty period begins on the date the engine or equipment is delivered to an ultimate purchaser.

(b) General Emissions Warranty Coverage. Zhongjian, warrants to the ultimate purchaser and each subsequent purchaser that your small off-road engine is designed, built, and equipped at the time of sale to conform with all applicable regulations adopted by the California Air Resources Board or the United States Environmental Protection Agency; and that it is free from defects in materials and workmanship which cause the engine to fail to conform with applicable regulations for a period of two years from the date the small off-road engine is purchased by the initial purchaser. Any replacement part or service that is equivalent in performance and durability may be used in non-warranty maintenance or repairs, and shall not reduce the warranty obligations of Zhongjian.

(c) The warranty on emissions-related parts will be interpreted as follows: Any warranted part that is not scheduled for replacement as required in the Maintenance Schedule is warranted for two

years. If any such part (including any part that is scheduled only for regular inspection) fails during the period of warranty coverage, it will be repaired or replaced at any [BRAND] ® Authorized Service Center at no charge. Any such part repaired or replaced under warranty will be warranted for the remaining warranty period. A statement to the effect of “repair or replace as necessary” would not reduce the period of warranty coverage. Any warranted part that is scheduled for replacement as required maintenance in the Maintenance Schedule is warranted for the period of time prior to the first scheduled replacement point for that part. Any such part repaired or replaced under warranty is warranted for the remainder of the period prior to the first scheduled replacement point, and will be repaired or replaced at any [BRAND]® Authorized Service Center for no charge until that replacement point is reached.

Zhongjian shall remedy warranty defects at any authorized [BRAND] ® Authorized Service Center, including any distribution center that may be franchised to service the subject engines. Any diagnostic work done at a [BRAND] ® Authorized Service Center shall be free of charge to the owner if such work determines that a warranted part is defective. Any manufacturer-approved or equivalent replacement part may be used for any warranty maintenance or repairs on emission-related parts, and must be provided free of charge to the owner if the part is still under warranty. Zhongjian, is liable for damages to other engine components caused by the failure of a warranted part still under warranty.

Add-on or modified parts that are not exempted by the California Air Resource Board may not be used. The use of any non-exempted add-on or modified parts will be grounds for disallowing a warranty claim. Zhongjian, will not be liable to warrant failures of warranted parts caused by the use of a non-exempted add-on or modified part.

The Emission Parts List specifically defines the emission-related warranted parts. Zhongjian, will provide any documents that describe its warranty procedures or policies within five days upon request by the California Air Resources Board.

EMISSIONS PARTS LIST (IF EQUIPED)

Exhaust Emissions

Fuel Metering System	Carburetor and internal parts (and/or pressure regulator or fuel injection system)
	Air/fuel ratio feedback and control system
	Cold start enrichment system
Air Induction System	Controlled hot air intake system
	Intake manifold
	Air filter
Ignition System	Spark Plugs
	Magneto or electronic ignition system
	Spark advance/retard system
Exhaust Gas Recirculation (EGR) System	EGR valve body, and carburetor spacer if applicable
	EGR rate feedback and control system
Air injection System	Air pump or pulse valve
	Valves affecting distribution of flow
	Distribution manifold
Catalyst or Thermal Reactor System	Catalytic converter
	Thermal reactor
	Exhaust manifold
Particulate Controls	Traps, filters, precipitators, and any other device used to capture particulate emissions
Miscellaneous items Used in Above Systems	Vacuum, temperature, and time sensitive valves and sw itche
	Electronic controls
	Hoses, belts, connectors, and assemblies

Evaporative Emissions

(1)	Fuel Tank	(10)	Vacuum Control Diaphragms**
(2)	Fuel Cap	(11)	Control Cables**
(3)	Fuel Line	(12)	Control Linkages**
(4)	Fuel Line Fittings	(13)	Purge Valves
(5)	Clamps**	(14)	Vapor Hoses
(6)	Pressure Relief Valves**	(15)	Liquid/Vapor Separator
(7)	Control Valves**	(16)	Carbon Canister
(8)	Control Solenoids**	(17)	Canister Mounting Brackets
(9)	Electronic Controls**	(18)	Carburetor Purge Port Connector

**Note: As they relate to the evaporative emission control system.

Zhongjian, will furnish with each new engine written instructions for its maintenance and use by the owner.

PRORUN regularly improves our products, and you may find slight differences between your machine and descriptions contained within this operator's manual. Modifications can be made to the machine without notice and without the obligation to update the manual, providing that the essential safety and functional characteristics remain unaltered. Contact PRORUN Customer Service with any questions and for current specifications.

PRORUN / TOPSUN USA
200 Overhill Drive, Suite A
Mooresville, NC 28117
Proruntech.com
info@proruntech.com
Phone: 1-844-905-0882

Zhejiang Zhongjian Technology Co., Ltd
Web: www.topsunpower.cc
E-mail: sales@topsunpower.cc
ADD: No.155 Mingyuan North AVE, Economic Development Zone,
Yongkang, Zhejiang, 321300, P.R.China
Made In China