WORX®

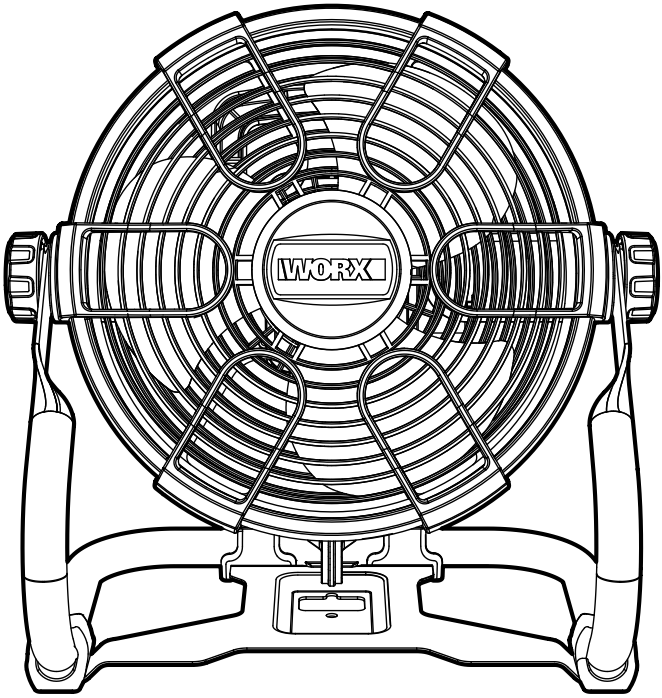

20V Jobsite Fan	**EN**	**P03**
20V Jobsite Fan	**F**	**P11**
20V Jobsite Fan	**ES**	**P15**

HELPLINE NUMBER
NUMÉRO DU SERVICE D'ASSISTANCE
NÚMERO DE LÍNEA DE AYUDA
1-866-354-WORX (9679)

WX095L WX095L.9

PRODUCT SAFETY

WARNING: This product can expose you to chemicals including lead and Di(2-ethylhexyl)phthalate (DEHP) which are known to the State of California to cause cancer and birth defects or other reproductive harm. For more information go to www.P65Warnings.ca.gov.

This appliance is not intended for use by persons (including children) with reduced physical, sensory or mental capabilities, or lack of experience and knowledge, unless they have been given supervision or instruction concerning use of the appliance by a person responsible for their safety. - Children should be supervised to ensure that they do not play with the appliance.

IMPORTANT SAFETY INSTRUCTIONS

READ AND SAVE THESE INSTRUCTIONS.

1. **Remove or disconnect battery pack and the power supply before cleaning or servicing**
2. **To reduce the risk of electric shock, do not expose to water or rain.**
3. **This is a fan-not a toy.**
4. **To reduce the risk of personal injury and electric shock, it should not be played with or placed where small children can reach it.**
5. **A battery operated fan with integral batteries or a separate/detachable battery pack shall be recharged only with the specified charger for the battery. A charger that may be suitable for one type of battery may create a risk of fire when used with another battery.**
6. **Use battery operated fan only with specifically designated battery pack. Use of any other batteries may create a risk of fire.**
7. **When battery pack is not in use, keep it away from other metal objects such as paper clips coins, keys, nails, screws, or other small metal objects that can make a connection from one terminal to another. Shorting the battery terminals together may cause sparks, burns, or a fire.**
8. **Do not incinerate this fan, even if it is severely damaged. The batteries can explode in a fire. Dispose of the fan in accordance with the relevant instructions.**

GENERAL SAFETY WARNINGS

WARNING: Read all safety warnings and instructions. Failure to follow the warnings and instructions may result in electric shock, fire and/or serious injury. Save all warnings and instructions for future reference.

SAFETY WARNINGS FOR BATTERY PACK

a) **Do not dismantle, open or shred battery pack.**
b) **Do not expose battery pack to heat or fire. Avoid storage in direct sunlight.**
c) **Do not short-circuit a battery pack. Do not store battery packs haphazardly in a box or drawer where they may short-circuit each other or be short-circuited by other metal objects.** When battery pack is not in use, keep it away from other metal objects, like paper clips, coins, keys, nails, screws or other small metal objects, that can make a connection from one terminal to another. Shorting the battery terminals together may cause burns or fire.
d) **Do not remove battery pack from its original packaging until required for use.**
e) **Do not subject battery pack to mechanical shock.**
f) **In the event of battery leaking, do not allow the liquid to come in contact with the skin or eyes. If contact has been made, wash the affected area with copious amounts of water and seek medical advice.**
g) **Observe the plus (+) and minus (–) marks on the battery back and equipment and ensure correct use.**
h) **Do not use any battery pack which is not designed for use with the equipment.**
i) **Keep battery pack out of the reach of children.**
j) **Seek medical advice immediately if a cell or battery has been swallowed.**
k) **Always purchase the battery pack recommended by the device manufacturer for the equipment.**
l) **Keep battery pack clean and dry.**
m) **Wipe the battery pack terminals with a clean dry cloth if they become dirty.**
n) **Battery pack needs to be charged before use. Always use the correct charger and refer to the manufacturer's instructions or equipment manual for proper charging instructions.**
o) **Do not leave battery pack on prolonged charge when not in use.**

p) After extended periods of storage, it may be necessary to charge and discharge the battery pack several times to obtain maximum performance.

q) Battery pack gives its best performance when it is operated at normal room temperature (20 °C ± 5 °C).

r) When disposing of battery packs, keep battery packs of different electrochemical systems separate from each other.

s) Recharge only with the charger specified by WORX. Do not use any charger other than that specifically provided for use with the equipment. A charger that is suitable for one type of battery pack may create a risk of fire when used with another battery pack.

t) Retain the original product literature for future reference.

u) Use only the battery pack in the application for which it was intended.

v) Remove the battery pack from the equipment when not in use.

w) Dispose of properly.

⚠ WARNING: This product can expose you to chemicals including lead and Di(2-ethylhexyl)phthalate (DEHP) which are known to the State of California to cause cancer and birth defects or other reproductive harm. For more information go to www.P65Warnings.ca.gov.

Information for radiated emission

This device complies with Canadian ICES-001.

This device complies with Part 15 of the FCC Rules. Operation is subject to the following two conditions:
(1) This device may not cause harmful interference, and
(2) This device must accept any interference received, including interference that may cause undesired operation.

⚠ WARNING: Changes or modifications to this unit not expressly approved by the party responsible for compliance could void the user's authority to operate the equipment.

NOTE: This equipment has been tested and found to comply with the limits for a Class B digital device, pursuant to Part 15 of the FCC Rules.
These limits are designed to provide reasonable protection against harmful interference in a residential installation. This equipment generates, uses and can radiate radio frequency energy and, if not installed and used in accordance with the instructions, may cause harmful interference to radio communications.
However, there is no guarantee that interference will not occur in a particular installation. If this equipment does cause harmful interference to radio or television reception, which can be determined by turning the equipment off and on, the user is encouraged to try to correct the interference by one or more of the following measures:

- Reorient or relocate the receiving antenna.
- Increase the separation between the equipment and receiver.
- Connect the equipment into an outlet on a circuit different from that to which the receiver is connected.
- Consult the dealer or an experienced radio/TV technician for help.

SYMBOL

	To reduce the risk of injury, user must read instruction manual
	Wear ear protection
	Li-Ion battery, battery must be recycled
	Batteries may enter water cycle if disposed improperly, which can be hazardous for ecosystem. Do not dispose of waste batteries as unsorted municipal waste.
	Do not burn



call2recycle®

POSITEC Inc. has established a partnership with the RBRC Corporation to recycle any Positec batteries with the RBRC-call2recycle seal. For environmental protection, please do not discard batteries in the trash. After the batteries' life cycle is ended, then please call 1-800-822-8837 for a free service that will properly dispose of the battery.

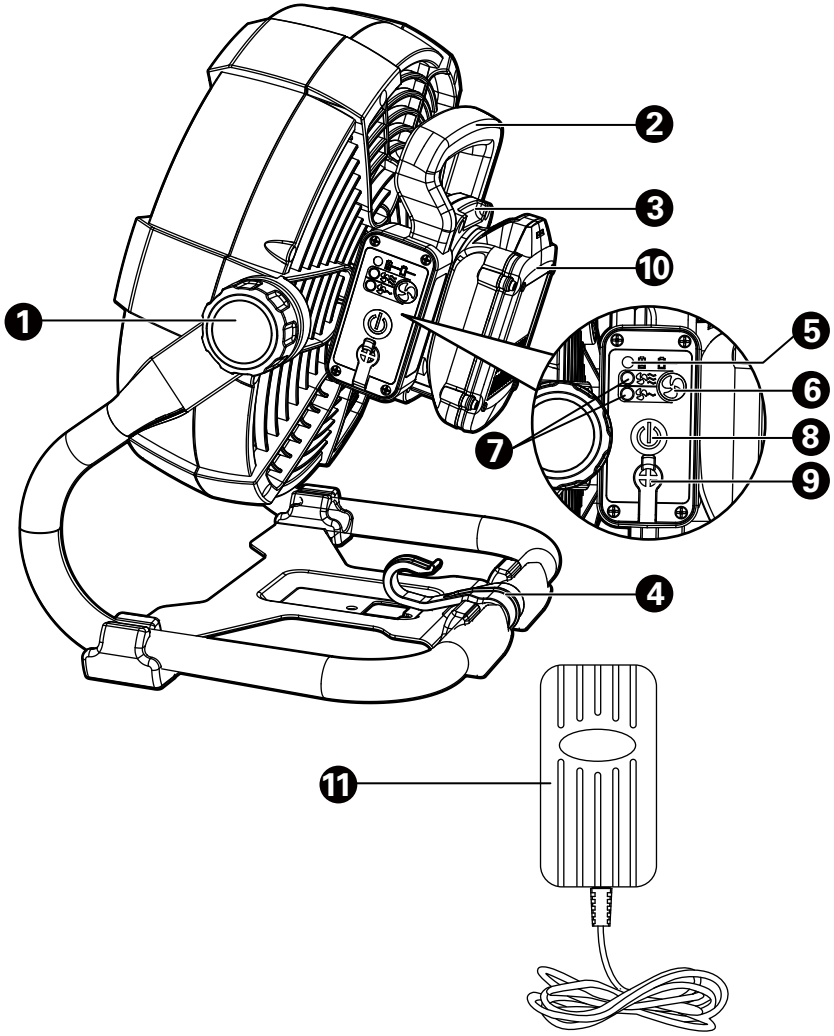
1
2
3
4
5
6
7
8
9
10
11

COMPONENT LIST

1.	POSITION ADJUSTMENT
2.	HANDLE
3.	BATTERY PACK PORT
4.	HOOK
5.	CHARGING INDICATOR LIGHT
6.	SPEED ADJUSTMENT BUTTON
7.	SPEED INDICATOR LIGHT
8.	POWER SWITCH
9.	AC ADAPTOR PORT
10.	BATTERY PACK
11.	AC ADAPTOR

*** Not all the accessories illustrated or described are included in standard delivery.**

TECHNICAL DATA

	WX095L	WX095L.9
Rated voltage	20 V⎓ Max**	
battery type	Li-Ion	
AC adapter input	100-240V~50/60 Hz 1.0 A	
AC adapter output	21 V ⎓ 1500 mA	
Charging time (approx.)		
Charger for 2.0 Ah battery	5 hr	
AC Adapter for 2.0Ah battery	7 hr	
Speed		
Low speed	5.5 hr	
High speed (with 2.0Ah battery)	1.5 hr	
Battery capacity	2.0 A	/
Machine weight	8.5 lbs	5.5 lbs

ACCESSORIES

	WX095L	WX095L.9
2.0Ah battery packWA3525	1	/
2.0Ah charger WA3881	1	/
AC adaptor	1	1

We recommend that you purchase your accessories listed in the above list from the same store that sold you the charger. Refer to the accessory packaging for further details. Store personnel can assist you and offer advice.

A1

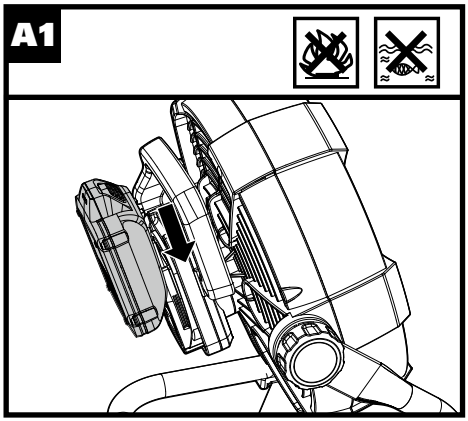

A2

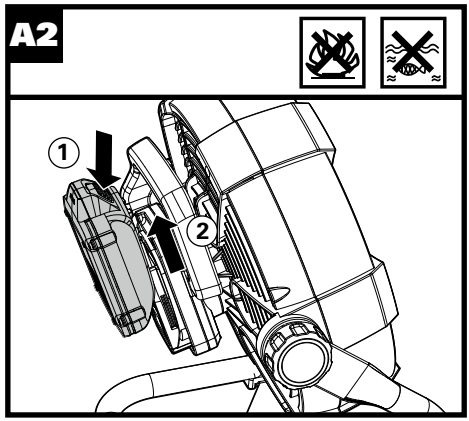

B

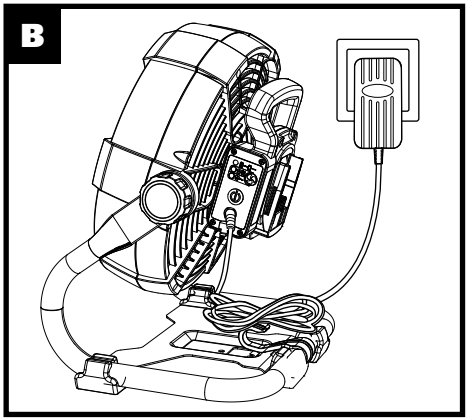

C

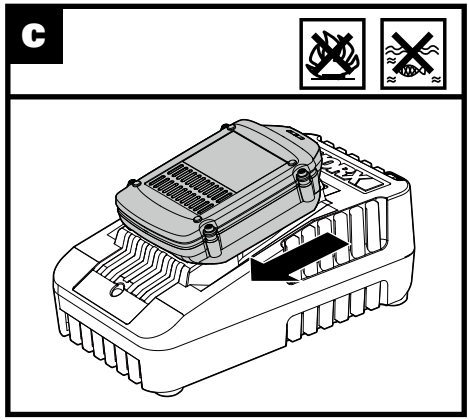

D

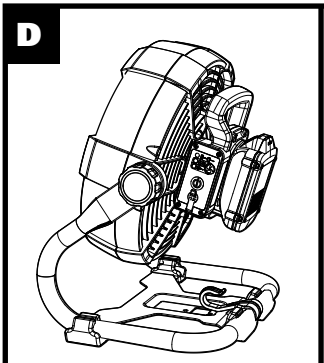

Mode1

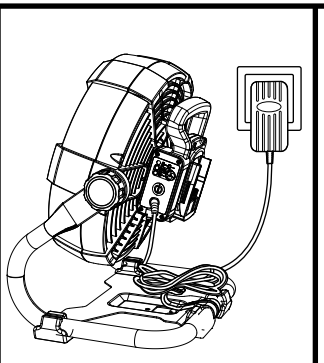

Mode2

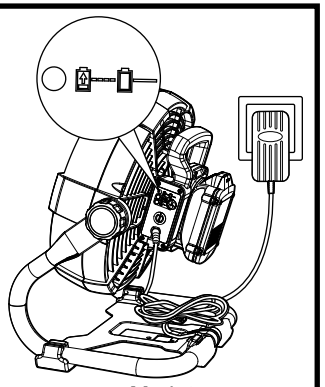

Mode3

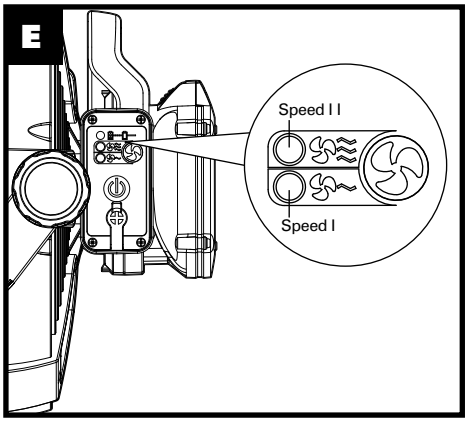
E
Speed I I
Speed I

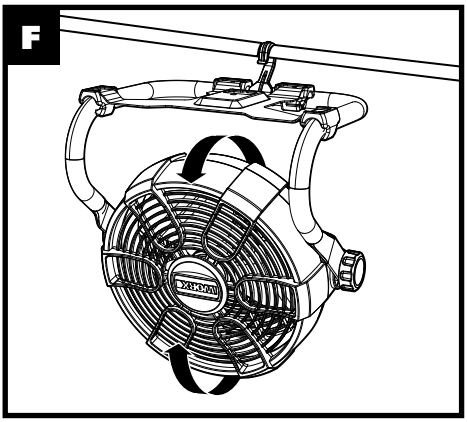
F

OPERATION INSTRUCTION

WARNING: Do not let your carelessness for acquaintance with the tool make you injured.

WARNING: Never make use of attachments or accessories which are not recommended by manufacture for it may hurt you seriously.

INSTALLING AND REMOVING THE BATTERY PACK (SEE FIGURE A1, A2)

1. Ensure that the switch (8) is closed.
2. Installing and removing the battery pack as the picture has shown.

WARNING: Remember to remove battery pack or adaptor all the time when adjusting, cleaning or leaving unused for it could protect you away from accidents which may hurt you to a certain degree.

INSTALLING AND REMOVING THE AC ADAPTOR (SEE FIGURE B)

1. Ensure that the switch (8) is closed.
2. Insert the round hole end of the adaptor into the fan as the figure has revealed
3. Link the plug end of the adaptor to the power supply.
4. Guarantee that the adaptor is firm and safe when you start to use.

CHARGING THE BATTERY PACK (SEE FIGURE C AND FIGURE D)

1. Charging through the charger.
2. Or install the battery pack to the fan and link fan to AC adaptor.

Charging indicator light will turn flashing green which means that it is charging. When battery is full, the light will stay green without flashing.

STARTING & STOPPING (SEE FIGURE D)

Mode 1: link the jobsite fan to battery pack .Push the switch (8) button to start and stop the fan.

Mode 2: link the jobsite fan to AC adaptor for power supply. Push the switch (8) button to start and stop the fan.

Mode 3: link the jobsite fan to AC adaptor and battery pack simultaneously .Under this circumstance, the battery pack can be charged while the fan is in operation. Push the switch (8) button to start and stop the fan.

WARNING: Make sure that the switch is closed when the fan is not in use.

CHANGE THE SPEED(SEE FIGURE E)

1. For Speed I, push the Speed adjusting button(6) to ~ and front light will turn on.
1. For Speed I I, push the Speed adjusting button(6) to ≈ and front light will turn on.

HANGING THE FAN AND ADJUSTING HEAD (SEE FIGURE F)

1. Put up the hook through the groove
2. Take advantage of hook to hang the fan
3. Adjusting the head, different angles can be made (0-360 degrees).

WARNING

1. It is inadvisable to hang the fan in the following ways that it will impede fan's operation and contribute to cord's damages.
2. When hanging , be careful in case it drops down which will hurt you.

MAINTENANCE AND SERVICE

WARNING: Always remove or disconnect battery pack before adjusting, cleaning, servicing or transporting the blower vacuum.

1) CLEANING AND MAINTENANCe

1. Must wear eye protection. If not , the object may get into your eyes which may hurt you.
2. Always take off battery pack and adaptor when maintaining the product in order to refrain from the injury.
3. Do not put the finger, sticks or other similar objects into the fan in case of the injury or product's damage.
4. Never let chemicals touch the plastic parts. Or else, the plastic parts will be damaged, causing irreversible personal injury
5. Never try to damage any part of the battery pack and keep it away from children.The battery should be recycled and treated correctly.

Not obey the warning above, serious consequence will be made, such as fire.

2) STORAGE

Store in a secure, dry place out of the reach of children.

Do not place other objects on the product. Employ only the same replacements for it may contribute to the damage of product when using other replacements.

Not recommend using the fan in the wet place outside the door.

MAINTAIN TOOLS WITH CARE

Remove the plug from the socket before carrying out any adjustment, servicing or maintenance.

Your tool requires no additional lubrication or maintenance. Never use water or chemical cleaners to clean your charger. Wipe clean with a dry cloth. Always store your charger in a dry place.

For battery tools:

The ambient temperature range for the use and storage of tool and battery is 0°C-45°C-.

The recommended ambient temperature range for the charging system during charging is 0°C--40°C.

FCC PART 15

Supplier's Declaration of Conformity
Product Description : CLASS 2 POWER SUPPLY
Model Number : ZD36W210150US
Trade Name : UL

This device complies with part 15 of the FCC Rules. Operation is subject to the following two conditions:
(1) This device may not cause harmful interference, and
(2) This device must accept any interference received, including interference that may cause undesired operation.

Responsible Party :
Positec USA, Inc.
10130 Perimeter Parkway, Charlotte, NC 28216 USA
Tel.: (704) 599-3711
Fax: (704) 599-6390

WORX

you've got the power

www.worx.com

Copyright © 2019, Positec. All Rights Reserved.
Copyright © 2019, Positec. Tous droits réservés.
© Derechos reservados 2019, Positec. Todos los derechos reservados.