TURBRO

Diesel Heater User Manual

ARCADE

Model: T8BP



IMPORTANT SAFEGUARDS: READ ALL INSTRUCTIONS BEFORE USE.

Improper handling and/or installation of the heater may result in fire hazards and property damage due to the presence of fuel and electrical components. Strict adherence to all safety and installation instructions is mandatory.

RETAIN THIS MANUAL FOR FUTURE REFERENCE

CONTENTS

SAFETY INSTRUCTIONS – – – – – – – – – – – – – – – – – – – 01

FUNCTION OVERVIEW – – – – – – – – – – – – – – – – – – – 02

PACKAGE CONTENTS – – – – – – – – – – – – – – – – – – – 03

SPECIFICATIONS – 04

INSTALLATION – 05

OPERATING – 07

BLUETOOTH CONTROL – – – – – – – – – – – – – – – – – – 12

FCC STATEMENT – 15

MAINTENANCE – 16

TROUBLESHOOTING – – – – – – – – – – – – – – – – – – – 17

WARRANTY INFORMATION – – – – – – – – – – – – – – – – 19

SAFETY INSTRUCTIONS

Please read all instructions before attempting to assemble, operate, or install the product.

To reduce the risk of fire, electric shock, or injury to persons, observe the following:

- Use this unit only in the manner intended by the manufacturer.
- Do not use or install the heater in places where flammable vapors or gases or large amounts of dust may form and accumulate.
- Disable the heater when the fuel tank is being fueled.
- Do not cover the heater with clothing, pieces of fabric, and so on, and do not place such objects in front of the air intake pipe or inlet and outlet of the heated air.
- The installation arrangement must exclude the possibility of contact of the exhaust pipe with the air intake, fuel pipe, or other flammable objects.
- The vehicle or place where the heater is installed must be equipped with a fire extinguisher.
- Do not install electric wiring (harnesses) of the heater near the fuel pipe and the exhaust pipe.
- Disconnect the heater from its electric power during repair work on the heater.
- To prevent electrical damage, never power the heater from the vessel's circuit while the engine is running without a battery connected.
- Do not disconnect power while the heater is in operation.
- When electric welding is carried out on the vehicle or repair work is made on the heater, the heater must be disconnected from the battery.
- Take the safety precautions, which must be observed when working with electrical and fuel systems, when installing and dismantling the heater.
- Do not disconnect the heater from power before the purge cycle ends.
- When the heater has been switched off, do not switch it on again for 5-10 seconds.

- Due to poisonous exhaust gases and risk of suffocation, **DO NOT** use the heater in closed and/or unventilated places (e.g., garage, workshop, etc.)
- Do not step on the heater or put any objects on it or in it.
- Electric wiring, the air intake, and the fuel pipe must be protected from contact with the sharp edges of vehicle structures.

If the consumer fails to follow the requirements above, the warranty of the heater becomes null and void.

SAVE THESE INSTRUCTIONS

FUNCTION OVERVIEW

This heater is an independent heating device that reduces damage caused by sudden temperature drops to vehicles. It increases the cabin temperature, preheats the engine coolant, and minimizes engine wear in low temperatures. It also facilitates cabin de-icing, cold starts, and windshield defogging. Operating independently of the vehicle's original heating system, it provides continuous heating regardless of whether the engine is running. It can even be used in camping tents and household rooms, but always keep the area well-ventilated. Never use in sealed spaces.

PACKAGE CONTENTS



Diesel Heater Unit



LCD Control Panel



Remote Control



AC/DC Power Adapter



DC 12/24V Power Cable



Air Outlet Pipe



Rotary Tuyere



Exhaust Pipe



Heat Protection Sleeve



Silencer



Silencer Fixing Accessories



Clamp ϕ0-83mm x 2



Clamp ϕ21-44mm x 2



Clamp ϕ19-29mm x 2

SPECIFICATIONS

Model: T8BP

Power Supply: 12V / 24V DC, 110V AC / 60Hz

Rated Current: 3A

Product Features and Dimensions



Hot Air Outlet Fuel Tank Indicator

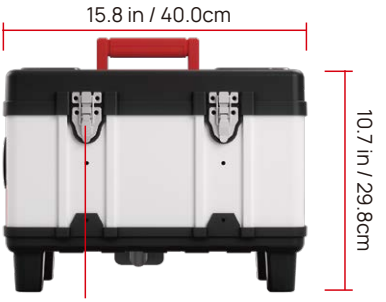

Metal Buckle



Power Connector Cool Air Inlet

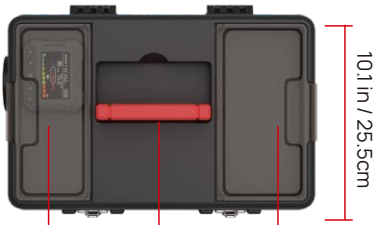

LCD Control Panel Chamber Handle Power Adapter Chamber

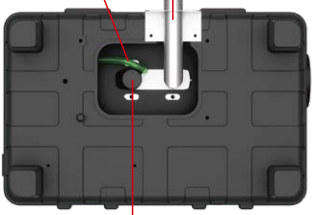

Fuel Pipe Exhaust Outlet

Intake Air Filter

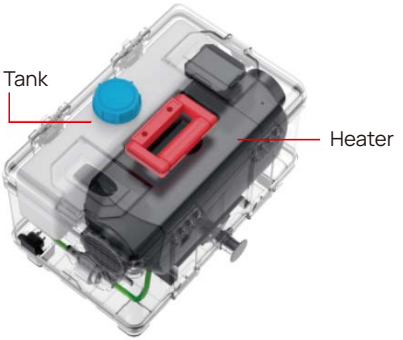

Fuel Tank Heater

Internal Structure Of The Main Machine

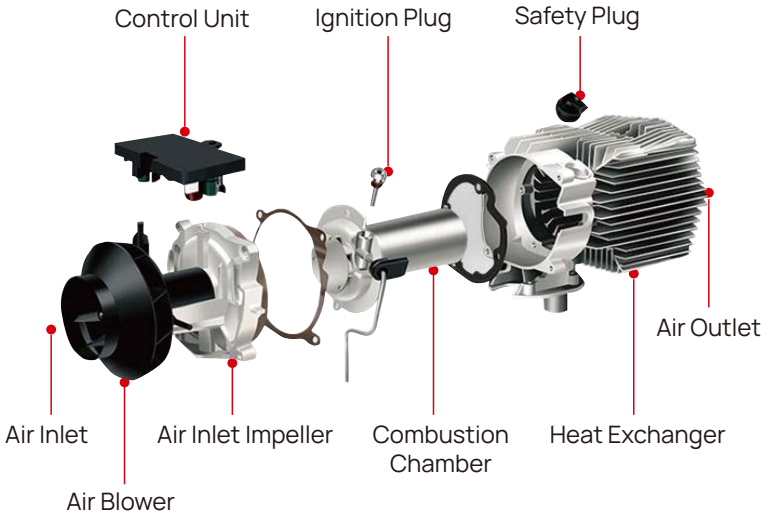

INSTALLATION

WARNING: To reduce the risk of fire, do not store or use gasoline or other flammable vapors and liquids in the vicinity of the heater.

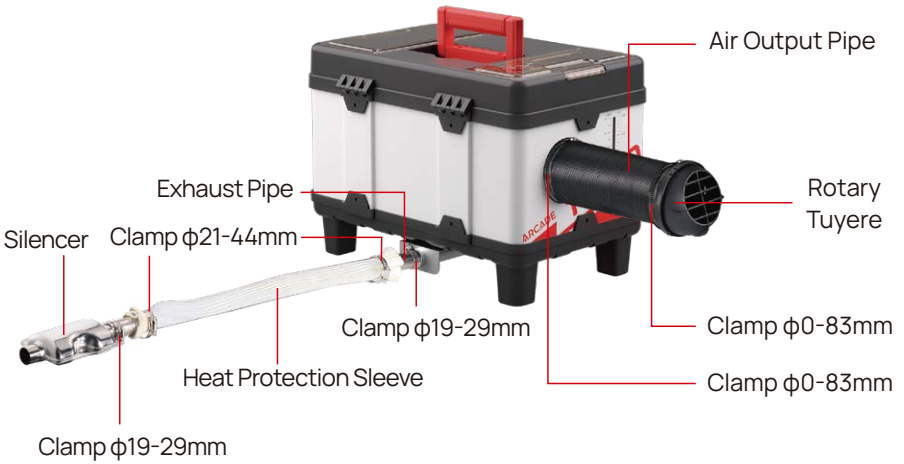



Power Connection

If you use a 12V /24V DC power supply, connect the positive (red) and negative (black) wires to the battery terminals.

WARNING: The exhaust terminal must extend outdoors to ensure the entire exhaust stream discharges completely outside.

Note: To ensure optimal combustion, please remember that the smoke exhaust pipe cannot be placed upward but must be placed horizontally or downward.

WARNING: The exhaust gas can reach temperatures as high as 750℉/400℃. Always keep children, pets, and flammable materials away from the exhaust pipe and outlet. Never place cargo or other objects near the exhaust path.

OPERATING

Control Panel

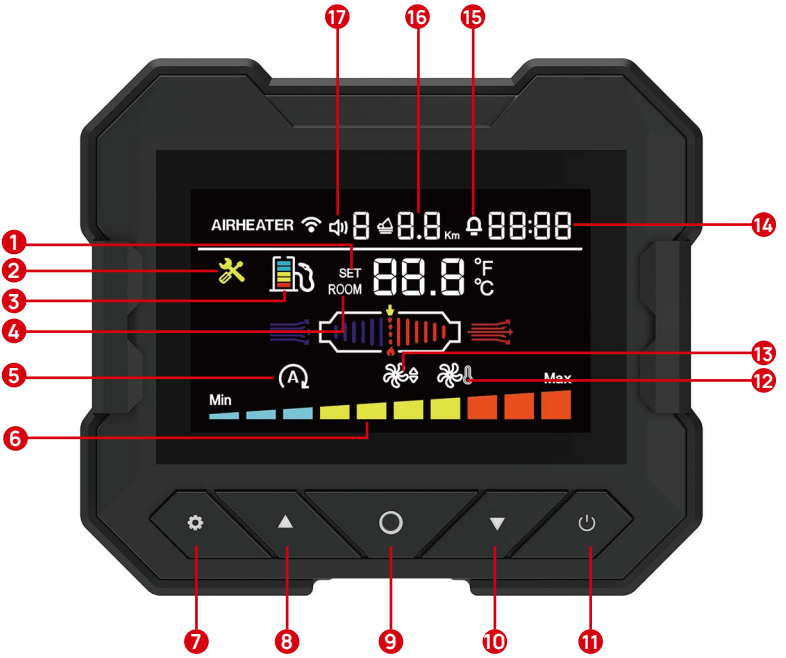

1. Set Temperature
2. Malfunction Icon
3. Fuel Volume
4. Room Temperature
5. Automatic Start/Stop Heating
6. Gear Output
7. Setting Button
8. Up Button
9. ○ BUTTON
10. Down Button
11. Power Button
12. Temperature Mode
13. Gear Mode
14. Current Time
15. Timer Icon
16. Altitude
17. Language

Remote Control

The remote control can be used up to 164 feet (50 meters) away from the heater, so long as there are no obstructions between the remote control and the heater.



After pressing the Power Button to shut down, the heater will not turn off immediately, accompanied by audible fan operation. This is the purge cycle—a normal process. Do not disconnect power until the purge cycle fully completes.

Do not cut off the power supply while the heater is in operation, as this may cause irreparable damage to the heater. Please cut off the power supply only after the heater has been shut down normally, and the purge cycle is completed.

Note: The heater should be used on a horizontal and stable surface. If it is used in a moving vehicle or ship, it must be fixed in a space to prevent it from moving or tipping over due to bumps.

After power-on, the LCD control panel will perform a startup animation (including a brief full-screen display) before indicating readiness.

Oil Pumping Mode:

Designed to pre-fill the fuel system after initial use or prolonged inactivity, enabling faster startup.

When the heater is powered for the first time but not yet turned on, hold down **[○]** Button for 7 seconds to enter the oil pumping mode. The screen displays a 300-second countdown, and oil pumping begins immediately. After the countdown is completed, the process finishes, and the heater will automatically exit and shut down. During oil pumping, press the **[⏻]** Power Button to exit the oil pumping mode and shut down the heater.

Press the Power Button to turn the heater on, and it start to work and it will take 3-5 minutes to heat up, please wait patiently. During this period, you will start to hear the oil pump begin to start ticking, and the air from the air outlet will start to heat up.

Note: It is normal for the heater to emit smoke when it is first turned on.

Working Mode - Temperature Mode

Designed to automatically heat the space to the set temperature (46.4-96.8°F / 8-36°C).

In this mode, the heater intelligently adjusts its gear to reach the desired temperature more efficiently and economically.

Working Mode - Gear Mode

Designed to manually set a power output (1-10 gears) to heat the space.

In this mode, the heater continuously operates at the selected gear to maximize heat output. For long-term efficiency, we recommend reducing gears or switching to Temperature Mode once the desired temperature is achieved.

Working Mode Switching:

In the startup state, press **[⚙]** Setting Button to switch between the Gear mode and Temperature mode.

Basic Settings

After powering on, hold down **[⚙]** Setting Button for 3 seconds to enter the basic setting interface. The setting items are directly displayed on the screen. Select different setting items by pressing the **[△]** Up and **[▽]** Down Buttons. Press the **[⚙]**Setting Button to enter the corresponding setting interface, and the adjustable parameters will flash. Then adjust the parameters by pressing the **[△]** Up and **[▽]** Down Buttons, and switch or confirm the parameters by pressing the **[⚙]** Setting Button. After all the parameters in the basic settings are set, hold down **[⚙]** Setting Button for 3 seconds to save the setting data and exit the running interface.

The interface displays the specific data for the setting item:

F0: Current time

F1: Scheduled start time (the time when the heater turns on)

F2: Running duration (after **F1**)

F3: Timer function switch, default is on. If set to off, the timed functions set by **F1** - **F2** will not take effect.

F4: Language switching: E (English), G (German), r (Russian), – (Voice off)

F5: Temperature Calibration (range 15.8 to 48.2°F / –9 to 9°C)

F6: Fuel volume in the fuel tank (range 5–50L ,Display – represents not monitoring the fuel tank condition);

F7: Oil pump type (16/22/28/32UL ,default: 22UL);

F8: Automatic start/stop heating switch (In temperature control mode, delays shutdown by 30 seconds after the room temperature reaches the set temperature; starts up after a 30-second delay if the room temperature drops 2°C (3.6°F) below the set point).

F9: Bluetooth pairing switch

FA: Remote control pairing switch

Fb: Temperature unit switch (Celsius/Fahrenheit)

Engineering Mode:

In the startup state, hold down **[△]** Up and **[▽]** Down Buttons together for 3 seconds to enter the engineering mode. The upper right corner displays the current item. Press the **[△]** Up and **[▽]** Down Buttons to switch between all items. The interface displays the specific data of engineering mode: After viewing, press **[⏻]** Power Button to exit to the homepage.

En00	Heater motherboard version number (scrolling display)
En01	Fault code[see the Troubleshooting Part for details]
En02	Shell temperature of the heat exchanger
En03	Power supply voltage
En04	Heater running gear
En05	Room temperature
En06	Altitude
En07	Manual pump oil
En08	Remote control pairing
En09	Bluetooth matching

BLUETOOTH CONTROL

Note: The effective control distance of Bluetooth is 98 feet (30 meters).

A. Scan the QR code below or search ' **airHeaterBle** ' on App Store or ' **AirHeaterBLE** ' on Google Play and download it.



AirHeater APP

Download on the App Store

GET IT ON Google Play

B. Turn on the Bluetooth of your phone or device.

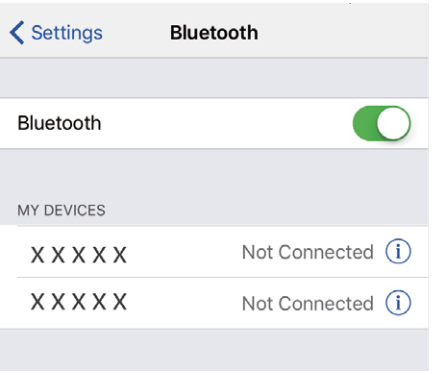

C. Open the APP, click the "**+ Device**" at the top of the page.



D. Click the Bluetooth button, then the APP will automatically search for available devices.

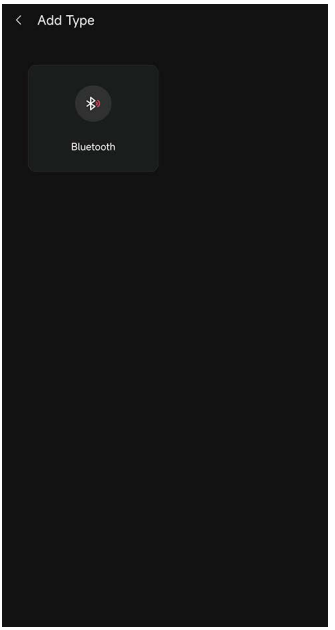

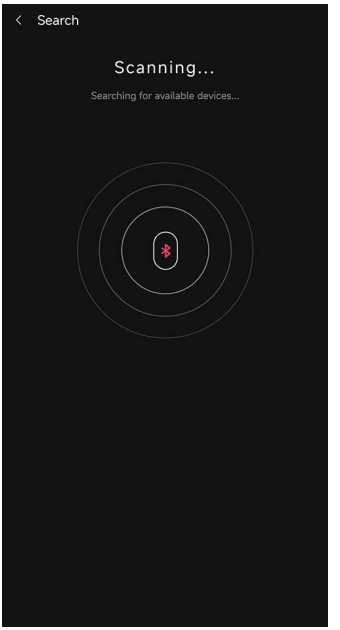

E. Click the device list that pops up from the search.



F. Click the Bind button, then the APP will automatically connect to the device.

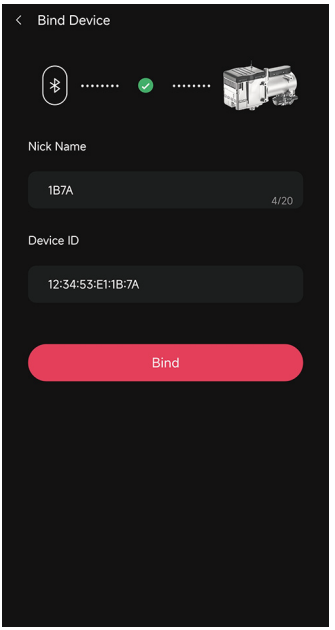

G. The device will now appear in your "My Device" list. Tap it to enter the APP interface.

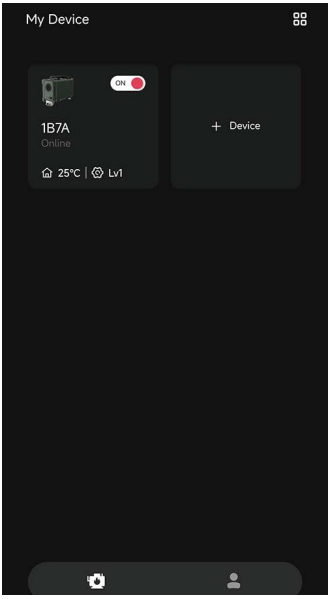

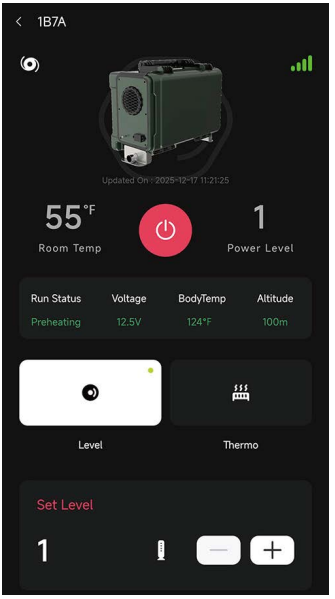

FCC STATEMENT

This device complies with part 15 of the FCC Rules. Operation is subject to the following two conditions: (1)This device may not cause harmful interference, and (2) this device must accept any interference received,including interference that may cause undesired operation.

This equipment has been tested and found to comply with the limits for a Class B digital device, pursuant to part 15 of the FCC Rules. These limits are designed to provide reasonable protection against harmful interference in a residential installation. This equipment generates, uses and can radiate radio frequency energy and.if not installed and used in accordance with the instructions, may cause harmful interference to radio communications. However, there is no guarantee that interference will not occur in a particular installation. If this equipment does cause harmful interference to radio or television reception, which can be determined by turning the equipment off and on, the user is encouraged to try to correct the interference by one or more of the following measures.Reorient or relocate the receiving antenna.

Increase the separation between the equipment and receiver. Connect the equipment into an outlet on a circuit different from that to which the receiver is connected Consult the dealer or an experienced radio/TV technician for help.

MAINTENANCE

WARNING: Poorly ventilated exhaust can KILL. Carefully follow ALL aspects of ventilation maintenance.

- Periodically inspect the electrical connections for loose connections and tighten if needed.
- Regularly check the fuel levels in the heater's fuel tank to make sure there's enough diesel to keep the heater running. If the fuel level is low, top off the tank with diesel while being careful to avoid overfilling.
- Clean the air filter regularly by removing it from the heater and gently tapping it against a hard surface to remove any loose debris. Using a clean cloth or brush, remove any smaller dirt or debris. Finally, reattach the air filter to the heater. It's recommended to clean the air filter every few months during normal use and more often in polluted areas or during heavy use.
- Check the fuel lines and connections for any signs of leaks, such as fuel spots on the floor or a strong diesel odor. If there are leaks, tighten the connections to prevent further leaks. If you are unsure how to tighten the connections, consult the seller.
- Check the exhaust pipe regularly for blockages, clearing and cleaning the line if needed.
- If the heater has not been used for a long period of time, it Is important to perform a test run before using it again. This will ensure that the heater is functioning properly and that there are no leaks or other issues that could cause harm. To perform a test run, turn on the heater and run it for a few minutes, observing the fuel and air levels, the temperature, and the exhaust pipe. If everything appears to be working properly, the heater is ready for use. If you notice any issues, such as dirty or broken components, clean or replace them as needed. For serious issues, seek assistance from the seller or licensed diesel heating technician.

TROUBLESHOOTING

When a fault occurs during operation, the control panel display will flash to display the error code.

Error Code	Possible Cause	Recommended Solution
E 01	Abnormal voltage	1. If you use the DC 12/24V Power Cable to connect the heater, check if the power supply voltage is higher than32V or lower than 9V. 2. Check if the connecting of main wire harness comes loose.
E 03	Abnormal ignition plug	1. Check if the ignition plug is connected firmly; 2. If the ignition plug fails, replace the ignition plug; 3. If the motherboard fails, replace it;
E 04	Abnormal oil pump	1.Check if the oil pump plug is loose or not connected firmly; 2.Check if there is an open circuit in the main harness; 3.If the oil pump fails,replace it.
E 05	Overheat protection	1.The furnace temperature sensor model is incorrect or faulty, replace the sensor; 2.If the motherboard fails, replace it.
E 06	Abnormal fan	1.Check if the fan impeller is stuck; 2.Check if the fan plug is loose or not connected firmly; 3.If the fan fails, replace it. 4.Check if the induction magnet of the wind wheel is missing or has incorrect polarity; 5.Check whether the motherboard wind speed sensor is normal; 6.If the motherboard fails, replace it.
E 08	Lack of oil and stalling	Check if the fuel tank is short of oil.

Error Code	Possible Cause	Recommended Solution
E 09	Abnormal overheat protection sensor	1. Check if the temperature sensor connector is loose or not connected firmly; 2. If the sensor fails, please replace the motherboard. 3. If the motherboard fails,replace it.
E 10	Second startup failure	1.Check if the oil pump works; 2.Check if the interfaces of the oil circuit are waxed or blocked.

WARRANTY INFORMATION

This 1-year limited warranty is extended to the original purchaser of this product and warrants against any defect in materials and workmanship under normal use and conditions, for a period of one year from the date of the original purchase, subject to the conditions and limitations outlined below.

This warranty is non-transferable to any subsequent owner of the product regardless of whether the product is transferred during the specified term of the warranty.

THIS LIMITED WARRANTY IS GIVEN TO THE PURCHASER IN LIEU OF ALL OTHER WARRANTIES, EXPRESSED OR IMPLIED, INCLUDING BUT NOT LIMITED TO THE WARRANTIES OF MERCHANTABILITY OF FITNESS FOR A PARTICULAR PURPOSE.

What Is Covered?

- TURBRO's warranty extends only to products purchased from authorized sellers that are subject to TURBRO's quality controls and have agreed to follow its quality controls.
- This warranty is limited to the repair or replacement of part(s) proved to be defective in material or workmanship after said defect is confirmed by the manufacturer's inspection.
- The manufacturer may, at its discretion, fully discharge all obligations with respect to this warranty by refunding the wholesale price of the defective part(s).

UPON THE EXPIRATION OF THIS WARRANTY, ALL SUCH LIABILITY WILL TERMINATE. NO OTHER WARRANTIES ARE EXPRESSED OR IMPLIED ANYMORE.

Some states do not allow limitations on how long an implied warranty lasts, so the above limitations may not apply to you.

What Is Not Covered?

- Damage or losses caused by any alterations or unauthorized repair made to the product by the owner.
- Damage or losses caused by accident, neglectful operation, misuse, abuse, or use contrary to the user manual and safety guidelines.
- Damage or losses occurring during commercial use, rental use, or any use for which the product is not intended.
- Damage or losses caused by improper or inadequate maintenance.
- Failure to perform general maintenance (including cleaning).
- Use of non-standard parts or accessories.
- Natural depreciation and normal wear and tear.

TURBRO SHALL NOT BE LIABLE FOR ANY INCIDENTAL OR CONSEQUENTIAL DAMAGES FOR BREACH OF ANY EXPRESS OR IMPLIED WARRANTY ON THIS PRODUCT, EXCEPT TO THE EXTENT PROHIBITED BY APPLICABLE LAW.

Some states do not allow the exclusion or limitation of incidental or consequential damages so the above limitation or exclusion may not apply to you.

How To Request Warranty Services?

To obtain the benefit of this warranty please leave a message online (www.turbro.com/contact), or send an email to support@turbro.com.

To express our gratitude to you for choosing us, we are giving you a 1-year warranty extension to the original 1-year manufacturer's limited warranty, extending the coverage period to two years in total.

- Complete the registration of your new product at https://www.turbro.com/warranty within 90 days from the date of package delivery (inclusive of the 90th day).
- Any registration beyond this stipulated period will be deemed invalid.
- The ultimate interpretation of the terms and conditions related to the extended warranty service rests solely with TURBRO.

If you discover that your product is defective within the specified warranty period, please contact our Customer Support via support@turbro.com.

- Order ID and invoice, or bill of sale should be provided. Such payment records must be kept to verify the purchase date and establish a warranty period.
- Model and issue description should be provided in detail, preferably with pictures and videos.
- DO NOT dispose of your product before contacting us.
- DO NOT return the product unless instructed by our customer service.
- The original carton should be kept in case of warranty return of the unit.

What Will TURBRO Do?

- Replace certain parts.
- Replace the item.
- Refund the item under certain circumstances.

In no event shall liability exceed the purchase price paid by the original purchaser of the product.

Any instructions or warranty included in this manual may be subject to change without notice. For the most up-to-date instructions and warranty information, please contact us via support@turbro.com.

TURBRO

support@turbro.com
www.turbro.com
(323) 438-3334

V20251217