PRORUN®

20V/// Lithium-Ion

Operator's Manual

HEDGE TRIMMER

MODEL: PHT120

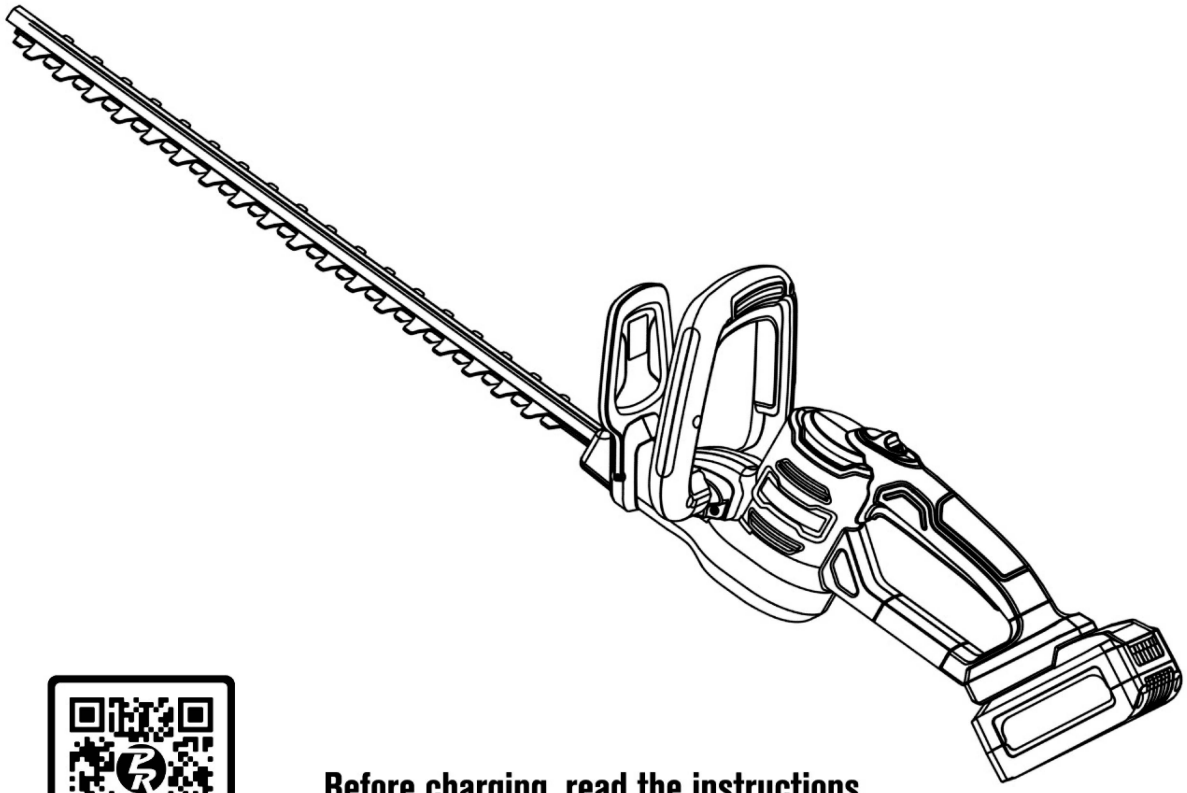

Everything PRORUN

Before charging, read the instructions.

⚠ IMPORTANT - READ CAREFULLY BEFORE USE

⚠ IMPORTANT SAFETY INSTRUCTIONS – SAVE THESE INSTRUCTIONS



WARNING: To reduce the risk of injury, the user must read and understand the Operator's Manual before using this product. Save these instructions for future reference.

Please let us know what you think.
To leave a review and see our full line of products, visit:

proruntech.com ★★★★★

1-844-905-0882, info@proruntech.com

Version: B - Issue Date: 2023/03/31

Table of Contents

1. GENERAL MACHINE SAFETY WARNINGS Page 1
2. SAFETY INSTRUCTIONS FOR HEDGE TRIMMER Page 4
3. TRANSPORTING AND STORAGE Page 5
4. BATTERY CHARGER AND BATTERY Page 6
5. SYMBOLS Page 9
6. SPECIFICATIONS Page 11
7. KNOW YOUR HEDGE TRIMMER Page 12
8. BATTERY AND CHARGER OPERATION Page 13
9. ASSEMBLY INSTRUCTIONS Page 15
10. OPERATIONS Page 17
11. ENVIRONMENTAL PROTECTION Page 18
12. MAINTENANCE Page 19
13. TROUBLESHOOTING Page 20
14. EC DECLARATION Page 21

1. GENERAL MACHINE SAFETY WARNINGS

⚠ **WARNING Read all safety warnings, instructions, illustrations, and specifications provided with this machine.** *Failure to follow the warnings and instructions may result in electric shock, fire, and/or serious injuries.*

Save all warnings and instructions for future reference.

The term "machine" in all of the warnings listed below refers to your battery operated (cordless) machine.

• Work area safety

a) Keep work area clean and well lit. *Cluttered or dark areas invite accidents.*

b) Do not operate machines in explosive atmospheres, such as in the presence of flammable liquids, gases, or dust. *Machines create sparks which may ignite the dust or fumes.*

c) Keep children and bystanders away while operating a machine. *Distractions can cause you to lose control.*

• Electrical safety

a) Avoid body contact with earthed or grounded surfaces such as pipes, radiators, ranges, and refrigerators. *There is an increased risk of electric shock if your body is earthed or grounded.*

b) Do not expose machines to rain or wet conditions. *Water entering a machine will increase the risk of electric shock.*

c) Do not abuse the battery charger cord. Never use the cord for carrying. *Keep cord away from heat, oil, sharp edges, or moving parts. Damaged or entangled cords increase the risk of electric shock.*

• Personal safety

a) Stay alert, watch what you are doing, and use common sense when operating a machine. Do not use a machine while you are tired or under the influence of drugs, alcohol, or medication. *A moment of inattention while operating machines may result in serious personal injury.*

b) Use personal protective equipment. Always wear eye protection. *Protective equipment such as dust mask, non-skid safety shoes, hard hat, or hearing protection used for appropriate conditions will reduce personal injuries.*

c) Prevent unintentional starting. Ensure the switch is in the off position before connecting battery pack and/or to power source, picking up or carrying the machine. *Carrying machines with your finger on the switch or energizing machines that have the switch on invites accidents.*

d) Remove any adjusting key or wrench before turning the machine on. *A wrench or a key left attached to a rotating part of*

machine may result in personal injury.
e) Do not overreach. Keep proper footing and balance at all times. *This enables better control of the machine in unexpected situations. The hedge trimmer is intended to be used by the operator at ground level and not on ladders or any other unstable support.*
f) Dress properly. Do not wear loose clothing, or jewelry. Keep your hair, clothing, and gloves away from moving parts. *Loose clothes, jewelry, or long hair can be caught in moving parts.*
g) If devices are provided for the connection of dust extraction and collection facilities, ensure these are connected and properly used. *Use of these devices can reduce dust-related hazards.* **h) Do not let familiarity gained from frequent use of tools allow you to become complacent and ignore tool safety principles.** *A careless action can cause severe injury within a fraction of a second.*

- **Machine use and care**

a) Do not force the machine. Use the correct machine for your application. *The correct machine will do the job better and safer at the rate for which it was designed.*
b) Do not use the machine if the switch does not turn it on and off. *Any machine that cannot be controlled with the switch is dangerous and must be repaired.*
c) Keep all parts of the body away from the cutter blade. Do not remove cut material or hold material to be cut when blades are moving. *Blades continue to move after the switch is turned off.*
d) When clearing jammed material or servicing the unit, make sure all power switches are off and the battery pack is removed or disconnected. *Unexpected actuation of the hedge trimmer while clearing jammed material or servicing may result in serious personal injury.*
e) Carry the hedge trimmer by the handle with the cutter blade stopped. *When transporting or storing the hedge trimmer always fit the cutting device cover. Proper handling of the hedge trimmer will reduce possible personal injury from the cutter blades.*
f) Store idle machines out of the reach of children and do not allow persons unfamiliar with the machine or these instructions to operate the machine. *Machines are dangerous in the hands of untrained users.*
g) Maintain machines and accessories. *Check for misalignment or binding of moving parts, breakage of parts and any other condition that may affect the machines operation. If damaged, have the machine repaired before use. Many accidents are*

caused by poorly maintained machines.

h) Keep cutting tools sharp and clean. *Properly maintained cutting tools with sharp cutting edges are less likely to bind and are easier to control.*

i) Use the machine, accessories, and tool bits etc. in accordance with these instructions, taking into account the working conditions and the work to be performed. *Use of the machine for operations different from those intended could result in a hazardous situation.*

j) Hold the machine by insulated gripping surfaces only, because the cutter blade may contact hidden wiring. *Cutter blades contacting a "live" wire may make exposed metal parts of the machine "live" and could give the operator an electric shock.*

k) Prevent unintentional starting. *Release the trigger and remove the battery immediately in the event of accident or breakdown.*

l) Keep all power cords and cables away from cutting area. *Power cords or cables may be hidden in hedges or bushes and can be accidentally cut by the blade.*

m) Do not use the hedge trimmer in bad weather conditions, especially when there is a risk of lightning. *This decreases the risk of being struck by lightning.*

n) Check the hedges and bushes for foreign objects, e.g., wire fences and hidden wiring before operating the hedge trimmer.

o) Always hold the hedge trimmer firmly with both hands when you are working. *Wrap your fingers tightly around the handles, keeping the handles cradled between your thumb and forefinger.*

- **Battery tool use and care**

a) Recharge only with the charger specified by the manufacturer. *A charger that is suitable for one type of battery pack may create a risk of fire when used with another battery pack.*

b) Use machines only with specifically designated battery packs. *Use of any other battery packs may create a risk of injury and fire.*

c) When battery pack is not in use, keep it away from other metal objects, like paper clips, coins, keys, nails, screws, or other small metal objects that can make a connection from one terminal to another. *Shorting the battery terminals together may cause burns or a fire.*

d) Under abusive conditions, liquid may be ejected from the battery; avoid contact. If contact accidentally occurs, flush with water. If liquid contacts eyes, additionally seek medical help. *Liquid ejected from the battery may cause irritation or burns.*

e) Do not use a battery pack or tool that is damaged or modified. *Damaged or modified batteries may exhibit unpredictable behavior resulting in fire, explosion, or risk of injury.*
f) Do not expose a battery pack or appliance to fire or excessive temperature. *Exposure to fire or temperature above 212°F (100°C) may cause fire and explosion.*
g) Follow all charging instructions and do not charge the battery pack or appliance outside of the temperature range specified in the instructions. *Charging improperly or at temperatures outside of the specified range may damage the battery and increase the risk of fire.*

- **Service**

a) Contact PRORUN Customer Service with questions or issues with this machine. *This will ensure that the safety of the machine is maintained.*
b) Never service damaged battery packs. *Service of battery packs should only be performed by the manufacturer or authorized service providers.*
⚠ **WARNING: When using electric gardening appliances, basic safety precautions should always be followed to reduce the risk of fire, electric shock, and personal injury, including the following:**

- **Training**

a) Read the instructions carefully. *Be familiar with the controls and the correct use of the machine.*
b) Keep in mind, that the operator or user is responsible for accidents or hazards occurring to other people or their property.

- **Preparation**

a) This machine is designed for maintaining lawns and gardens in the manner and in the conditions described in this manual. *Use of the*
machine for operations different than intended could result in serious injury or death.
– Do not use it for any other purposes. Misuse may result in personal injury or property damage, including damage to the machine.
– Use the machine, battery, and charger only as described in this manual.

2. SAFETY INSTRUCTIONS FOR HEDGE TRIMMER

- **General hedge trimmer safety warnings:**

a) Do not use the machine in bad weather conditions, especially when there is a risk of lightning. *This decreases the risk of being struck by lightning.*

b) Thoroughly inspect the area for wildlife where the machine is to be used. *Wildlife may be injured by the machine during operation.*

c) Before using the machine, always visually inspect to see that cutter blades are not damaged and free of foreign objects. *Damaged parts and debris increases the risk of injury.*

d) Wear eye, ear, head, and hand protection. *Adequate protective equipment will reduce personal injury from flying debris or accidental contact with the trimmer head and trimmer line*

e) Always use two hands when operating the machine. *Holding the machine with both hands will avoid loss of control.*

f) Hold the machine by the insulated gripping surfaces only because the cutting blades may contact hidden wiring. *Cutting blades contacting a "live" wire may make exposed metal parts of the machine "live" and could give the operator an electric shock.*

g) Keep all parts of the body away from the cutting blades when the hedge trimmer is operating. Before you start the hedge trimmer, make sure the cutting blades are not contacting anything. *A moment of inattention while operating the hedge trimmer may cause entanglement or personal injury from flying debris.*

h) Always keep proper footing and operate the hedge trimmer only when standing on fixed, secure, and level surface. *Slippery or unstable surfaces may cause a loss of balance or control of the hedge trimmer.*

i) Carry the hedge trimmer by the front handle with the machine switched off and away from your body. *Proper handling of the hedge trimmer will reduce the likelihood of accidental contact with the moving cutting blades.*

j) When clearing debris or servicing the machine, make sure the switch is off and the battery pack is removed. *Unexpected starting of the machine while clearing jammed material or servicing may result in serious personal injury.*

3. TRANSPORTING AND STORAGE

a) When transporting or storing the hedge trimmer, always fit the cutting blade cover. *Proper handling of the hedge trimmer will decrease the risk of personal injury from the blades.*

b) Unintentional starting may result in personal injury or property damage. *Remove the battery before inspecting the hedge trimmer or carrying out any cleaning, maintenance, repair work,*

before storing, and any other time the hedge trimmer is not in use.
c) Improper storage can result in unauthorized use, damage to the machine, battery, and charger or an increased risk of fire, electric shock, and other personal injuries or property damage.
– Before storing, always unplug the charger from the wall outlet and remove the battery.
– Store the machine, battery, and charger indoors in a dry, secure place out of the reach of children and other unauthorized users.

4. BATTERY AND BATTERY CHARGER

This section describes the battery and battery charger safety for your battery product.
Only use original batteries for products and only charge them in an original battery charger.

• Battery charger

The battery chargers are only used for charging of PRORUN® 20V replacement batteries.
– This manual contains important safety and operating instructions for battery charger.
– Before using battery charger, read all instructions and cautionary markings on battery charger, and product using battery.
⚠ CAUTION! Charge only Li-ion batteries recommended by the manufacturer.
– Other types of batteries may burst causing personal injury and damage.
– If the shape of the plug does not fit the power outlet, use an attachment plug adapter of the proper configuration for the power outlet.

⚠ WARNING! Minimize the risk of electric shock or short circuit as follows:
– Never insert any object into the charger's cooling slots. Do not try to dismantle the battery charger.
– Never connect the charger terminals to metal objects as this can short circuit the battery charger.
– Use approved and intact wall sockets.

⚠ WARNING! This machine produces an electromagnetic field during operation. This field may under some circumstances interfere with active or passive medical implants. To reduce the risk of serious or fatal injury, we recommend persons with medical implants consult their physician and the medical implant manufacturer before operating this machine. Do not use product when a thunderstorm is approaching.
– Unplug the charger from the wall outlet before inspecting or cleaning the charger.

– Regularly check that the battery charger connection wire is intact and that there are no cracks in it. Replace the charger if the power supply cord becomes worn or damaged. The power supply cord cannot be repaired or replaced.
– Never carry the battery charger using the cord and never pull out the plug by pulling the cord.
– Keep all cords and extension cords away from water, oil, and sharp edges. Make sure the cord is not pinched in doors, fences, or the like. Otherwise, it can cause the object to become live.
– Never clean the battery or the battery charger with water.
– Never allow the children to use the battery charger.
When charging, the charger must be placed in a well-ventilated area and under a roof to keep out moisture.

⚠ WARNING! Do not charge non-rechargeable batteries in the battery charger or use them in the machine.

⚠ WARNING! Do not use the battery charger close to corrosive or flammable materials. Do not cover the battery charger. Pull out the plug to the battery charger in the event of smoke or fire.
– Use the battery charger only when the surrounding temperature is between 41 °F (5 °C) and 113 °F (45 °C). Use the charger in an environment, which is well ventilated, dry, and free from dust.
Do not use:
– A faulty or damaged battery charger
– The battery in the battery charger outdoors.
Do not charge:
– Or never use a faulty, damaged, or deformed battery.
– The battery in the rain or in wet conditions.
– The battery in direct sunlight.
– The battery in the battery charger outdoors.

- **Battery**

– Do not dismantle, open or shred secondary batteries.
– Keep batteries out of the reach of children.
– Do not expose batteries to heat or fire. Avoid storage in direct sunlight.
– Do not short-circuit a battery. Do not store batteries haphazardly in a box or drawer where they may short-circuit each other or be short-circuited by other metal objects.
– Do not remove a battery from its original packaging until required for use.
– Do not subject batteries to mechanical shock.
– In the event of a cell leaking, do not allow the liquid to come in contact with the skin or eyes. If contact has been made, wash the affected area with copious amounts of water and seek medical

advice.
– Do not use any charger other than that specifically provided for use with the equipment.
– Do not use any battery which is not designed for use with the equipment.
– Always purchase the battery recommended by the device manufacturer for the equipment.
– Keep batteries clean and dry.
– Wipe the battery terminals with a clean dry cloth if they become dirty.
– Secondary batteries need to be charged before each use. Always use the correct charger and refer to the manufacturer's instructions or equipment manual for proper charging instructions.
– Do not leave a battery on prolonged charge when not in use.
– After extended periods of storage, it may be necessary to charge and discharge the batteries several times to obtain maximum performance.
– Retain the original product literature for future reference.
– Use the battery only in the application for which it was intended. When possible, remove the battery from the equipment when not in use.
– Dispose of properly

5. SYMBOLS

This page depicts and describes safety symbols that may appear on this product. Read, understand, and follow all instructions on the machine before attempting to assemble and operate it.

	Safety Alert	Because a hedge trimmer is a high-speed cutting tool special safety precautions must be observed to reduce the risk of personal injury.
	Read the Operator's Manual	It is important that you read, fully understand, and observe the following safety precautions and warnings. Read the operator's manual and the safety precautions periodically.
	Do not expose to rain	Protect the tool, battery, and charger from rain, water, liquids, and damp conditions. Keep the tool, battery, and charger dry.
	Wear eye protection	Always wear safety goggles or safety glasses with side shields when operating this product.
	Warning for cutting of fingers	To reduce the risk of cut injuries, keep hands, feet, and other body parts away from the cutting blades. Make sure blades have completely stopped before maintenance.
	Wear protective gloves	Always wear heavy duty nonslip gloves when handling the machine.
	Wear safety footwear	Wear sturdy boots with nonslip soles. Never wear sandals, flip-flops or go barefoot.
	Remove the battery	Disconnect or remove the battery from the hedge trimmer before cleaning or maintenance.
	Never expose to fire	Risk of fire, explosion and/or burns, including chemical burns. Never incinerate or place the battery on or near fires, stoves, or other high-temperature locations.
	Never heat the battery	Do not disassemble, crush, heat above 212°F (100°C). Never expose the battery to high pressures.
	Never immerse in water	To reduce the risk of personal injury or property damage from a short circuit, fire, or explosion. Never immerse the battery in water or other liquids.

	Recycling	Take the hedge trimmer, charger, accessories, and packaging to an approved disposal site for environmentally friendly recycling.
	Waste	Symbols on the product or its packaging indicate that this product cannot be handled as domestic waste. This product must be deposited at an appropriate recycling facility.
	Indoor use only	Use and store charger only indoors in dry rooms.
	Fail-safe transformer	For safer electronic isolation.
	Double insulated	To reduce electric shock protection.

This below units may be used in manual:

V	Volts	Voltage
A	Amperes	Current
Hz	Hertz	Frequency(cycles per second)
W	Watts	Power
min	Minutes	Time
mm	Millimeter	Length or size
in.	Inch	Length or size
Kg	Kilogram	Weight
Lbs.	Pound	Weight
RPM	Revolutions per minute	Rotational speed

DANGER! People with electronic devices, such as pacemakers, should consult their physician(s) before using this product. Operation of electrical equipment in close proximity to a heart pacemaker could cause interference or failure of the pacemaker.

6. SPECIFICATIONS

Moto type	PMDC
Weight without battery	4.69 Lbs. (2.1 Kg)
CutterType	Double sided
Cutting width	18.11 inches (460 mm)
Blade speed ,spm	3000

Sound Levels

Sound pressure level,measured according to EN 60335-1 and EN60745-2-15,dB(A)	86.6,K=3
Sound power level,measured according to ISO22868,dB(A)	94.3, K=3
Guaranteed Sound power level, dB(A)	97

Vibration Levels

Vibration Levels at handles, measured according to EN60745-1 and EN60745-2-15,m/s^2: 2.46， K=1.5

Approved batteries for PHT120	
Battery	**PB12040**
Type	Lithium-ion
Battery capacity, Ah	2.5
Voltage, V	40
Weight, kg	0.69

Approved chargers for the specified batteries, PB12040	
Battery charger	**PC120**
Input Voltage, V	100-240
Frequency, Hz	50-60
Power, W	90

7. KNOW YOUR HEDGE TRIMMER
Components and Controls

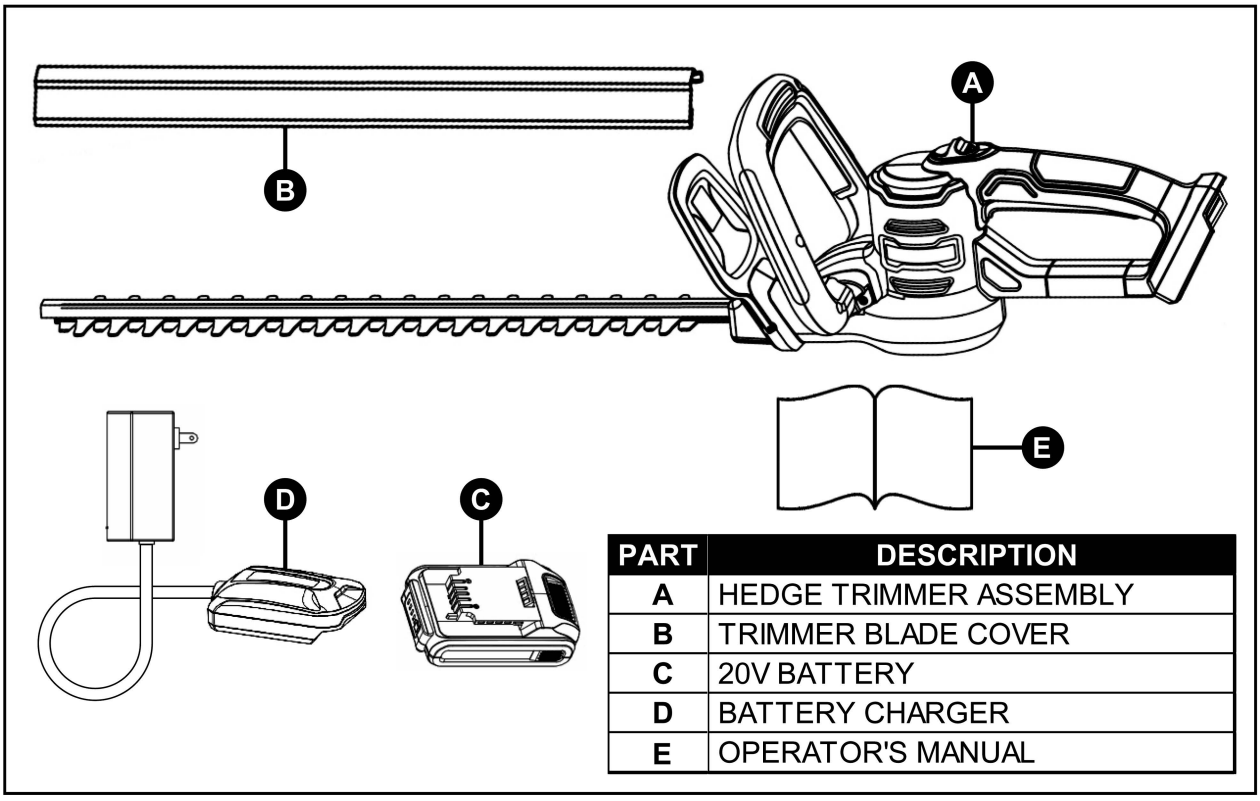

PART	DESCRIPTION
A	HEDGE TRIMMER ASSEMBLY
B	TRIMMER BLADE COVER
C	20V BATTERY
D	BATTERY CHARGER
E	OPERATOR'S MANUAL

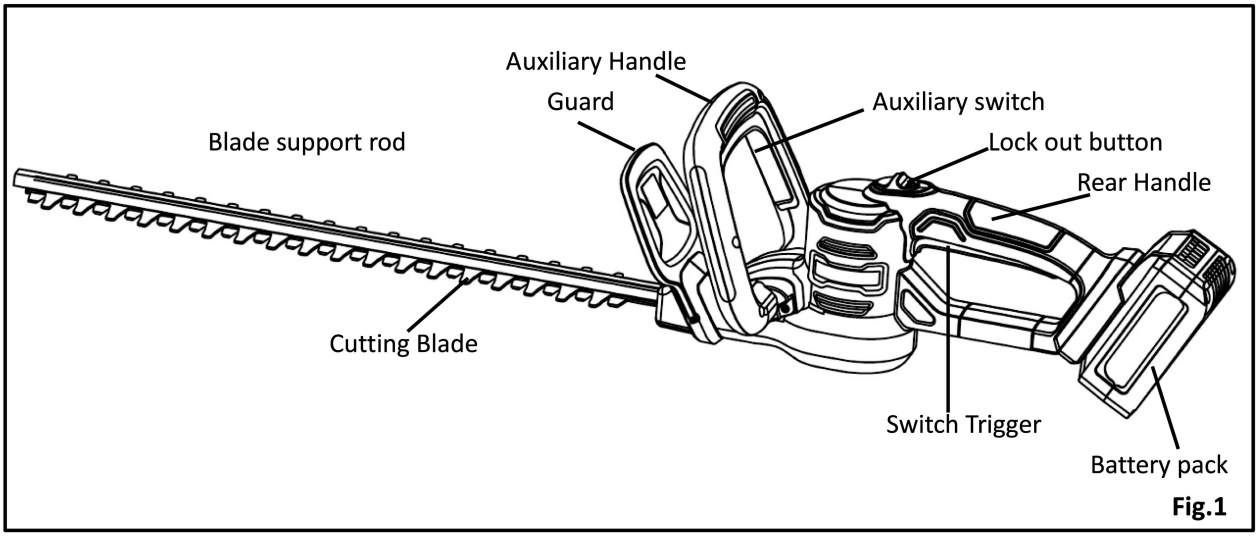

Fig.1

KNOW YOUR 40V CORDLESS HEDGE TRIMMER (see Fig.1)

The safe use of this product requires an understanding of the information on the product and in this operator's manual as well as a knowledge of the project you are attempting. Before use of this product, familiarize yourself with all operating features and safety rules.

GUARD

The guard helps to deflect chips or other debris away from the operator's hands and eyes.

TRIGGER SWITCH

The switch trigger, located beneath the rear handle, and the lock-off button, located behind the auxiliary handle, must be depressed simultaneously to allow blade rotation.

8. BATTERY AND CHARGER OPERATION

This section describes the battery and battery charger safety for your battery product.

Only use PRORUN® original batteries for PRORUN products and only charge them in an original battery charger from PRORUN. The batteries are software encrypted.

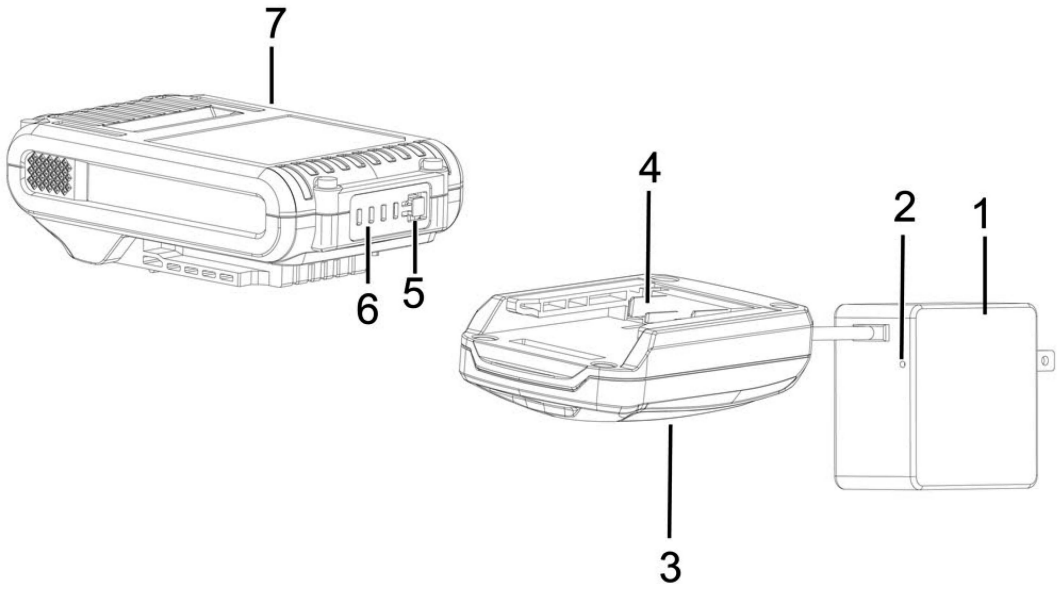

1. Electric plug
2. Charging indication LED
3. Battery charger
4. Electrical terminal
5. Electric energy button
6. Electric energy LED light
7. Battery

NOTE! The specifications of the plugs can be different by country, the picture is only for reference. If the shape of the plug does not fit the power outlet, use an attachment plug adapter of the proper configuration for the power outlet.

⚠ **WARNING! Risk of electric shock and short circuiting.** Use approved and intact wall sockets. Make sure that the power cord is not damaged. Replace power cord if it appears to be damaged in any way.

● Connect the battery charger

Connect the battery charger (3) to the voltage and frequency specified on the rating plate.

– Put the electric plug (1) in an earthed or grounded socket-outlet.

– The charging indication LED (2) will shine green indicating that the charger is working correctly.

– After 5 second, the light will turn off if no battery in the charger.

● Connect the battery to the battery charger

The battery(7) must be charged before using it the first time. The battery is only 30% charged when delivered.

NOTE! Monitor the charging process while charging a battery. It is recommended to remove the battery from the battery charger when the battery is full charged, or the charger is disconnected from the power supply.

– Align the raised ribs of the battery pack with the mounting slots in the charger; slide the battery battery into the charger and engage the battery with the charger's electrical terminals.

– The charger will communicate with the battery pack to evaluate the condition of the battery pack.

– While the battery pack is charging, the charger's indication LED will shine as follows to indicate the charging process and levels:


The charger's indication LED light shines consistently red when the battery is charging.


The charger's indication LED light shines consistently green when the battery is fully charged.


The battery will not be charged if the battery temperature is deviation. In that case the charger's indication LED light shines consistently green until the battery cool down or heat to normal temperature.


The battery will never be charged if the battery is damaged. In that case the charger's indication LED light shines consistently green

– The four LEDs on the battery pack indicate the current charged power level. Press the battery's electric energy button to check the power level of the battery.

– When the battery is full charged, the battery charger will stop charging (switch to stand by).

– It is recommended to remove the battery from the battery charger when the battery is fully charged, or the charger is disconnected from the power supply.

– Pull out the plug. Never use the power supply cable to disconnect the charger from the wall socket.

● Maintenance

– Make sure the battery and battery charger are clean and that the terminals on the battery and the battery charger are always clean and dry before the battery is placed in the battery charger.

– Keep the battery guide tracks clean. Clean plastic parts with a clean and dry cloth.

● Transport and storage

– Store the equipment in a lockable area so that it is out of reach of children and unauthorized persons.

– Store the battery and the battery charger in a dry, moisture-free and frost-free space.

– Store the battery where the temperature is between 14 °F (-10 °C) and 113 °F (45 °C) and never in direct sunlight.

– Store the battery charger only in an enclosed and dry space.

– Be sure to store the battery separate from the battery charger.

● Fault codes

LED display	Possible faults	Possible action
Charger LED shines consistently green but battery electric energy LED light indicates no increase in charge.	The battery is ok, but temperature deviation.	Charge the battery in surroundings where temperatures are between 32°F (0 °C) and 104°F (40 °C). Wait for the battery cool down.
Charger LED shines consistently green but battery electric energy LED light indicates no increase in charge.	Battery is damaged. Charger is damaged.	Contact PRORUN Customer Service.

9. ASSEMBLY INSTRUCTIONS

BATTERY

IMPORTANT! The battery pack is not charged when it is purchased. Before using the hedger for the first time, place the battery pack in the battery charger and charge. Make sure to read all safety precautions, and follow the instructions in the Battery Charger section.

To remove the battery (See Fig. 2)

• Press the release button on the battery pack down and hold.

• Grasp the trigger handle firmly. Pull the battery pack out of the handle.

NOTE: The battery pack fits snugly into the handle to prevent accidental dislodging. It may require a strong pull to remove.

To install the battery (See Fig. 2)

• Align the tongue of the battery pack with the cavity in the handle housing.

• Grasp the trigger handle firmly.

• Push the battery pack into the handle until the latch locks into place.

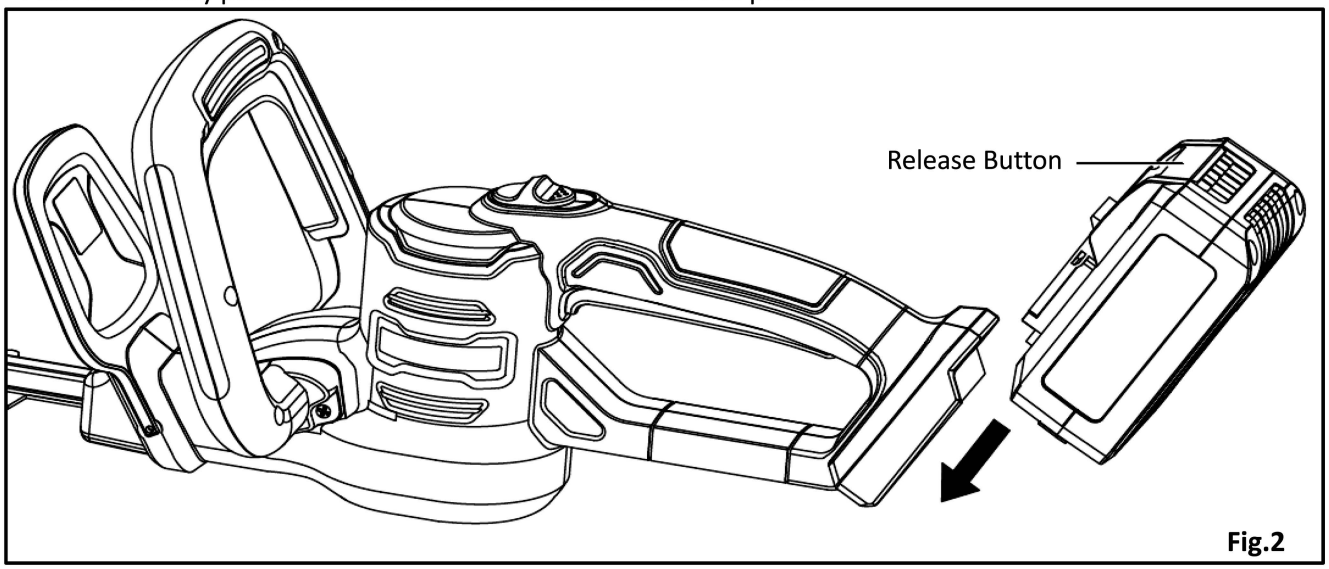

Fig.2

IMPORTANT! DO NOT remove the blade assembly unless it needs sharpening, straightening, or replacing. Take it to a qualified person for repair.

W A R N I N G

Follow these instructions in order to avoid injury and to reduce the risk of electric shock or fire:

• Replace the battery pack or the charger immediately if the battery case or charger cord is damaged.

• Verify that the switch is in the OFF position before inserting or removing the battery pack.

• Verify that the battery pack is removed and the switch is in the OFF position before inspecting, adjusting, or performing maintenance on any part of the hedger.

• Read, understand, and follow the instructions contained in the section entitled Charging Procedure.

UNPACKING

• This product requires no assembly.

• Carefully remove the product and any accessories from the box. Make sure that all items listed in the packing list are included.

• Inspect the product carefully to make sure no breakage or damage occurred during shipping.

• Do not discard the packing material until you have carefully inspected and satisfactorily operated the product.

9. ASSEMBLY INSTRUCTIONS

WARNING

To avoid personal injury:

• Handle the blade with care.

• Do not place your fingers or hand between the notches in the blade or in any position where they could get pinched or cut.

• Never service the blade or hedge trimmer unless the battery pack is removed.

• Do not use if the blade assembly is damaged or bent. Take to a qualified person to straighten, replace, or sharpen.

• Always keep both hands on the hedge trimmer handles to prevent your hand from touching the blade.

10. OPERATIONS

ON/OFF SWITCHES (See Fig. 3)

The hedge trimmer has two switches controls and a lock-OFF button used together to prevent accidental start-ups or injury.

• Place one hand on the trigger handle . Place the other hand on the Auxiliary handle.

• Push the lock-OFF button and hold.

• Squeeze the trigger switch . The hedge trimmer will turn ON.

• Release the lock-OFF button. The hedge trimmer will stay on as long as the trigger handle the trigger switch are squeezed ON.

• The hedge trimmer will stop if you release either the trigger handle.

IMPORTANT: If the hedge trimmer is accidentally dropped, the hedge trimmer will turn OFF and the blade will coast to a stop after several seconds. The hedge trimmer will then be locked OFF again.

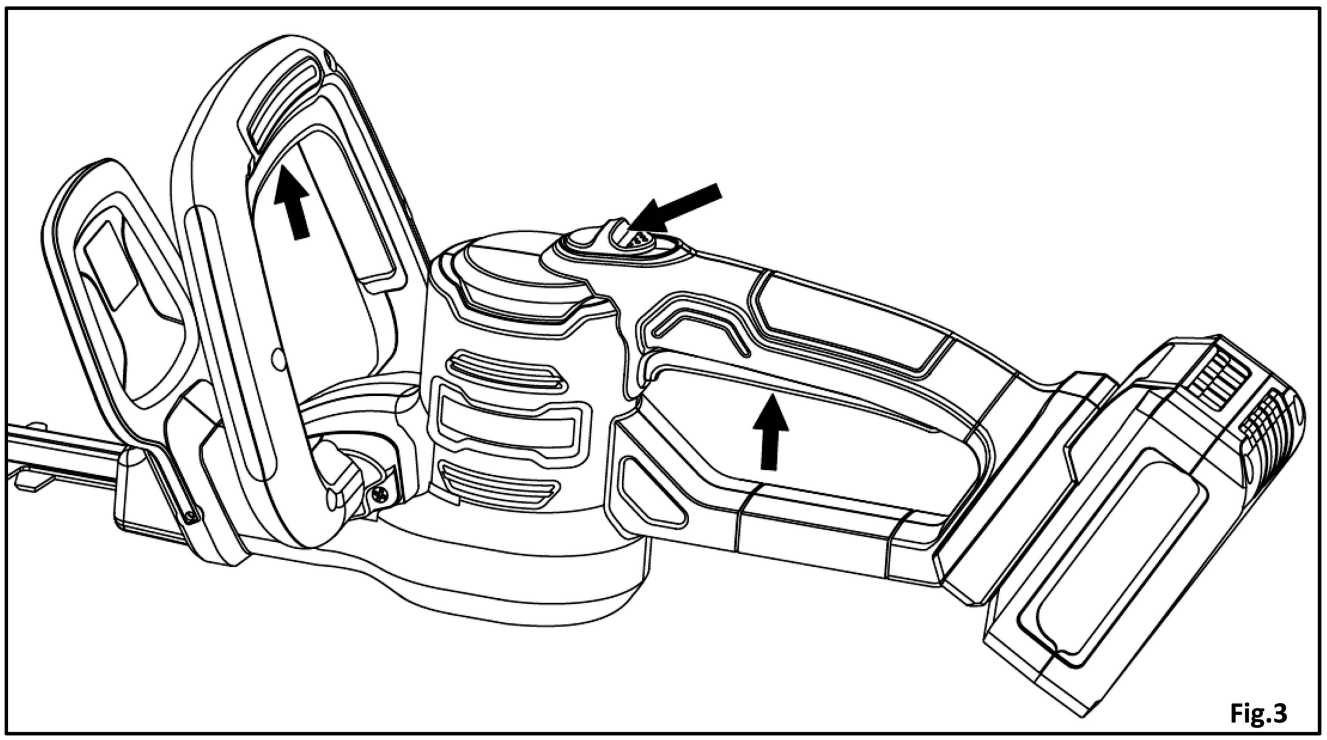

Fig.3

11. ENVIRONMENTAL PROTECTION



The following toxic and corrosive materials are in the batteries used in this hedge trimmer battery pack:
Lithium-Ion, a toxic material.

WARNING

All toxic materials must be disposed of in a specified manner to prevent contamination of the environment. Before disposing of damaged or worn out Lithium-Ion battery packs, contact your local waste disposal agency, or the local Environmental Protection Agency for information and specific instructions. Take the batteries to a local recycling and/or disposal center, certified for lithium disposal.

WARNING

If the battery pack cracks or breaks, with or without leaks, do not recharge it and do not use. Dispose of it and replace with a new battery pack. DO NOT ATTEMPT TO REPAIR IT!
To avoid injury and risk of fire, explosion, or electric shock, and to avoid damage to the environment:

- Cover the battery's terminals with heavy-duty adhesive tape.
- DO NOT attempt to remove or destroy any of the battery pack components.
- DO NOT attempt to open the battery pack.
- If a leak develops, the released electrolytes are corrosive and toxic. DO NOT get the solution in the eyes or on skin, and do not swallow it.
- DO NOT place these batteries in your regular household trash.
- DO NOT incinerate.
- DO NOT place them where they will become part of any waste landfill or municipal solid waste stream.
- Take them to a certified recycling or disposal center.

12. MAINTENANCE

WARNING

To avoid risk of fire, electric shock, or electrocution:

• Do not use a damp cloth or detergent on the battery or battery charger.

• Always remove the battery pack before cleaning, inspecting, or performing any maintenance on the hedge trimmer.

Cleaning

• Wipe the outside of the hedge trimmer with a dry, soft cloth. Do not hose down or wash with water.

• Scrape the guard to remove dried clippings and mud.

• Brush or blow dust, debris, and grass clippings out of the air vents. Keep them free of obstruction.

Battery Pack

• Store the battery pack fully charged.

• Once the charging light turns green, remove the battery from the charger and disconnect the charger from the outlet.

• Do not store the battery pack on the tool or in the charger.

• After charging, the battery pack may be stored in the charger, as long as the charger is not plugged in.

Charger Maintenance

• Keep the charger clean and clear of debris. Do not allow foreign material to get into the recessed cavity or onto the contacts. Wipe the charger clean with a dry cloth. Do not use solvents or water, and do not place the charger in wet conditions.

• Unplug the charger when there is no battery pack in it.

• Fully charge the batteries before placing them in storage.

• Store the charger at normal room temperature. Do not store it in excessive heat. Do not use the charger in direct sunlight. Recharge at room temperature between 45˚F and 104˚F (7˚C and 40˚C). If the battery pack is hot, allow it to cool down before recharging.

13. TROUBLESHOOTING

PROBLEM	POSSIBLE CAUSE	SOLUTION
Motor fails to start when switch trigger is depressed.	Battery is not secure Battery is not charged.	To secure the battery pack, make sure the latches on the top of the battery pack snap into place. Charge the battery pack according to the instructions included with your model
Motor runs, but cutting blades do not move.	Hedger damaged.	Call for technical service. Do not use hedge trimmer.
Hedge trimmer smokes during operation.	Hedger damaged.	Call for technical service. Do not use hedge trimmer.
Motor hums, blades do not move.	Debris or other may be jamming the blades	Remove battery, clear debris blockage from blades.

14. EC DECLARATION

Here with we, Zhejiang Zhongjian Technology Co., Ltd.
No.10 Mingyuan South AVE, Economic Development Zone, Yongkang, Zhejiang 321300, China
declare that the following Appliance complies with the appropriate basic safety and health requirements of the EC Directives based on its design and type, as brought into circulation by us
This declaration relates exclusively to the machinery in the state in which it was placed on the market, and excludes components which are added and/or operations carried out subsequently by the final user.

Category:	Cordless hedge trimmer
Model:	BHT236
Serial number:	000001-999999
Applicable EC Directives:	Machinery Directive 2006/42/EC

The following standards have been applied:
EN55014-1,EN55014-2,EN60745-1, EN60745-2-15
Additional used EC Directives: - EMC Directive 2014/30/EU
- Outdoor- Noise- Directive 2000/14/EC and 2005/88/EC
-RoHS Directive 2011/65/EC

Measured sound power level	94.3	dB(A)
Guaranteed sound power level	97	dB(A)

Conformity assessment method to Annex V/ Directive 2000/14/EC and 2005/88/EC

2016-11-07
Yongkang/ Yang Haiyue

Chief Engineer

PRORUN regularly improves our products, and you may find slight difference between your machine and descriptions contained within this operator's manual. Modifications can be made to the machine without notice and without the obligation to update the manual, providing that the essential safety and functional characteristics remain unaltered. Contact PRORUN Customer Service with any questions and for current specifications.

PRORUN / TOPSUN USA
200 Overhill Drive, Suite A
Mooresville, NC 28117
Proruntech.com
info@proruntech.com
Phone: 1-844-905-0882



Zhejiang Zhongjian Technology Co., Ltd
Web: www.topsunpower.cc
E-mail: sales@topsunpower.cc
ADD: No.155 Mingyuan North AVE, Economic Development Zone,
Yongkang, Zhejiang, 321300, P.R.China
Made In China