eXmark®

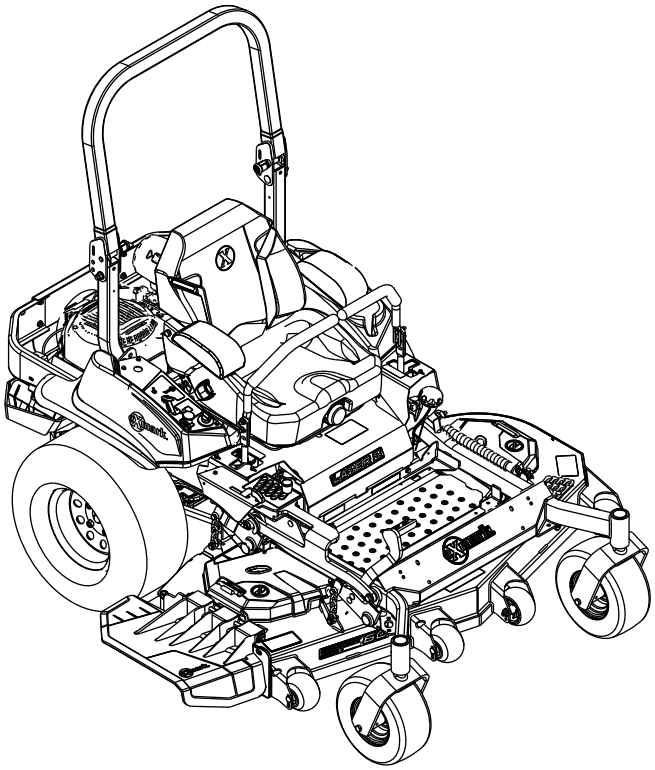

LAZER Z® S-SERIES

For Serial Nos.
420,130,747 & Higher
Lazer Z (LRS) Models
Part No. 3478-213 Rev. B

Operator's Manual

⚠ WARNING

CALIFORNIA
Proposition 65 Warning

The engine exhaust from this product contains chemicals known to the State of California to cause cancer, birth defects, or other reproductive harm.

Battery posts, terminals, and related accessories contain lead and lead compounds, chemicals known to the State of California to cause cancer and reproductive harm. Wash hands after handling.

Use of this product may cause exposure to chemicals known to the State of California to cause cancer, birth defects, or other reproductive harm.

Important: **It is a violation of California Public Resource Code Section 4442 or 4443 to use or operate the engine on any forest-covered, brush-covered, or grass-covered land unless the engine is equipped with a spark arrester, as defined in Section 4442, maintained in effective working order or the engine is constructed, equipped, and maintained for the prevention of fire.**

To acquire a spark arrester for your unit, see your Engine Service Dealer.

For all models that do not have Exmark engines, please refer to the engine manufacturer's information included with the machine.

For models with Exmark engines, refer to this manual for information.

The gross or net horsepower (or torque) of this engine was laboratory rated by the engine manufacturer in accordance with the Society of Automotive Engineers (SAE) J1940 or J2723. As configured to meet safety, emission, and operating requirements, the actual engine horsepower (or torque) on this class of mower will be significantly lower.

©2026 Exmark Mfg. Co., Inc.
415 Industrial Row
Beatrice, NE 68310

Contact us at www.Exmark.com.
Printed in the USA
All Rights Reserved

Introduction

CONGRATULATIONS on the purchase of your Exmark Mower. This product has been carefully designed and manufactured to give you a maximum amount of dependability and years of trouble-free operation.

This rotary-blade, riding lawn mower is intended to be used by professional, hired operators. It is designed primarily for cutting grass on well-maintained lawns on residential or commercial properties. Using this product for purposes other than its intended use could prove dangerous to you and bystanders.

This manual contains operating, maintenance, adjustment, and safety instructions for your Exmark mower.

BEFORE OPERATING YOUR MOWER, CAREFULLY READ THIS MANUAL IN ITS ENTIRETY.

By following the operating, maintenance, and safety instructions, you will prolong the life of your mower, maintain its maximum efficiency, and promote safe operation.

To maximize safety, performance, and proper operation of this machine, it is essential that all operators carefully read and fully understand the contents of the Operator's manual provided with the product. Failure to comply with the operating instructions or receive proper training may result in injury. Go to https://www.Exmark.com for additional safe operation information, such as safety tips, training materials, and Operator's manuals.

If additional information is needed, or should you require trained mechanic service, contact your authorized Exmark equipment dealer or distributor.

All Exmark equipment dealers and distributors are kept informed of the latest methods of servicing and are equipped to provide prompt and efficient service in the field or at their service stations. They carry ample stock of service parts or can secure them promptly for you from the factory.

All Exmark parts are thoroughly tested and inspected before leaving the factory, however, attention is required on your part if you are to obtain the fullest measure of satisfaction and performance.

Whenever you need service, genuine Exmark parts, or additional information, contact an Authorized Service Dealer or Exmark Customer Service and have the model and serial numbers of your product ready.

Figure 1 identifies the location of the model and serial numbers on the product. Write the numbers in the space provided.

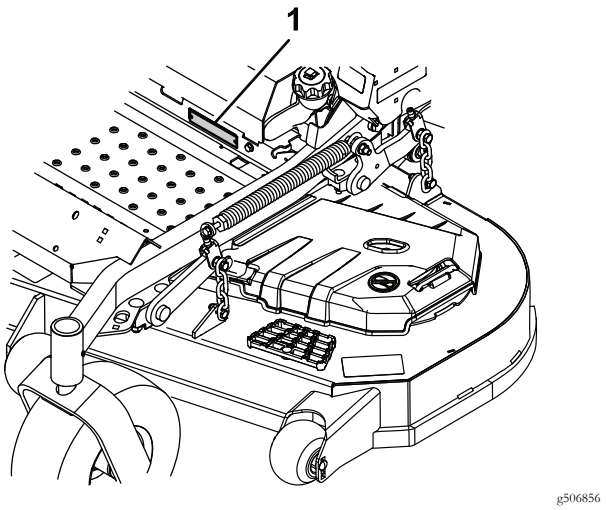

Figure 1

1. Model and serial number location

Model No. _____

Serial No. _____

For complete warranty details, see https://www.Exmark.com. You may also call us 402-223-6375 to request a written copy of the product's warranty.

Contents

Introduction 3
Safety 5
Safety Alert Symbol 5
General Safety 5
Safety and Instructional Decals 6
Specifications 13
Systems 13
Dimensions 16
Torque Requirements 18
Product Overview 19
Operation 19
Controls 19
Before Operation 23
Operating Instructions 25
During Operation Safety 25
After Operation 33
Transporting 33
Maintenance 36
Maintenance Safety 36
Recommended Maintenance Schedule(s) 37
Periodic Maintenance 38
Removing or Installing the Floor Pan 38
Engine Maintenance 38
Engine Safety 38
Check Engine Oil Level 39
Check Mower Blades 41
Check Safety Interlock System 43
Check Rollover Protections Systems (Roll Bar) Knobs 46
Check Seat Belt 46
Check for Loose Hardware 46
Service Air Cleaner 46
Change Engine Oil 47
Check Hydraulic Oil Level 47
Check Tire Pressures 47
Check Condition Of Belts 48
Lubricate Grease Fittings 48
Lubricate Deck Lift Pivot 49
Check Spark Plugs 49
Change Hydraulic System Filter and Fluid 49
Wheel Hub–Slotted Nut Torque Specification 50
Check Spark Arrester (if equipped) 50
Thread Locking Adhesives 50
General Purpose Grease (Or Food-Grade Anti-seize) 50
Copper-Based Anti-seize 50
Dielectric Grease 51
Adjustments 52
Deck Leveling 52
Pump Drive Belt Tension 54
Deck Belt Tension 54
Adjusting the Parking Brake 54
Electric Clutch Adjustment 54
Motion Control Linkage Adjustment 56
Motion Control Damper Adjustment 57
Motion Control Neutral Lock Pivot Adjustment 57
Motion Control Handle Adjustment 57
Motion Control Full Forward Tracking Adjustment 58
Caster Pivot Bearings Pre-Load Adjustment 58
Cleaning 59
Cleaning and Storing Safety 59
Clean Debris From Machine 59
Clean Engine and Exhaust System Area 59
Remove Engine Shrouds and Clean Cooling Fins 59
Clean Hydro Fan Cooling Guards, Hydro Cooling Fins, and Fan 59
Clean Grass Build-Up Under Deck 60
Cleaning the Suspension System 60
Waste Disposal 60
Troubleshooting 61
Schematics 64
California Proposition 65 Warning Information 68

Safety

Safety Alert Symbol

This Safety Alert Symbol (Figure 2) is used both in this manual and on the machine to identify important safety messages which must be followed to avoid accidents.

This symbol means: **ATTENTION! BECOME ALERT! YOUR SAFETY IS INVOLVED!**



g000502

Figure 2
Safety Alert Symbol

The safety alert symbol appears above information which alerts you to unsafe actions or situations and will be followed by the word **DANGER**, **WARNING**, or **CAUTION**.

DANGER: Indicates an imminently hazardous situation which, if not avoided, **Will** result in death or serious injury.

WARNING: Indicates a potentially hazardous situation which, if not avoided, **Could** result in death or serious injury.

CAUTION: Indicates a potentially hazardous situation which, if not avoided, **May** result in minor or moderate injury.

This manual uses two other words to highlight information. **Important** calls attention to special mechanical information and **Note** emphasizes general information worthy of special attention.

General Safety

This machine is capable of amputating hands and feet and of throwing objects. Always follow all safety instructions to avoid serious personal injury or death.

- Read, understand, and follow all instructions and warnings in the Operator's Manual and on the machine, engine, and attachments. All operators and mechanics should be trained. If the operator(s) or mechanic(s) can not read this manual, it is the owner's responsibility to explain this material to them; other languages may be available on our website.
- Only allow trained, responsible, and physically capable operators that are familiar with the safe operation, operator controls, and safety signs and instructions to operate the machine. Never let children or untrained people operate or service the equipment. Local regulations may restrict the age of the operator.
- Always keep the roll bar in the fully raised and locked position and use the seat belt.
- Do Not operate the machine near drop-offs, ditches, embankments, water, or other hazards, or on slopes greater than 15 degrees.
- Keep bystanders and children out of the operating area.
- Do Not put your hands or feet near moving parts.
- Do Not operate the machine without all safety shields, guards, switches, and other devices in place and in proper working condition.
- Park machine on level ground, disengage drives, set parking brake, stop engine, and remove key. Wait for all moving parts to stop before leaving the operator's position. Allow the machine to cool before servicing, adjusting, fueling, cleaning, or storing.

Safety and Instructional Decals

- Keep all safety signs legible. Remove all grease, dirt and debris from safety signs and instructional labels.
- Replace all worn, damaged, or missing safety signs.
- When replacement components are installed, be sure that current safety signs are affixed to the replaced components.
- If an attachment or accessory has been installed, make sure current safety signs are visible.
- New safety signs may be obtained from your authorized Exmark equipment dealer or distributor or from Exmark Mfg. Co. Inc.
- Safety signs may be affixed by peeling off the backing to expose the adhesive surface. Apply only to a clean, dry surface. Smooth to remove any air bubbles.
- Familiarize yourself with the following safety signs and instruction labels. They are critical to the safe operation of your Exmark commercial mower.

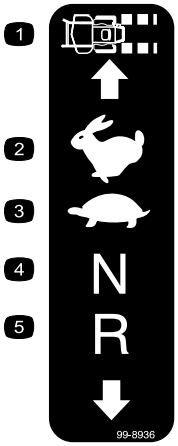

decal99-8936

99-8936

1. Machine speed
2. Fast
3. Slow
4. Neutral
5. Reverse



decal106-2655

106-2655

1. Warning—do not touch or approach moving belts; remove the key and read the instructions before servicing or performing maintenance.

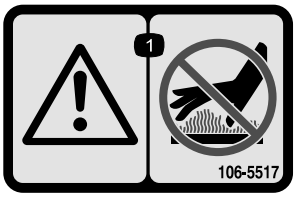

decal106-5517

106-5517

1. Warning—do not touch the hot surface.

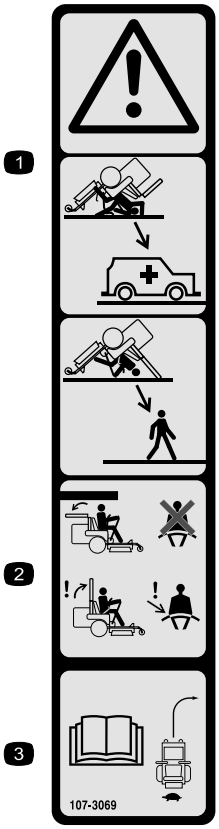

decal107-3069

107-3069

1. Warning-there is no rollover protection when the roll bar is down.
2. To avoid injury or death from a rollover accident, keep the roll bar in the fully raised and locked position and wear the seat belt. Lower the roll bar only when absolutely necessary; do not wear the seat belt when the roll bar is down.
3. Read the Operator's manual; drive slowly and carefully.

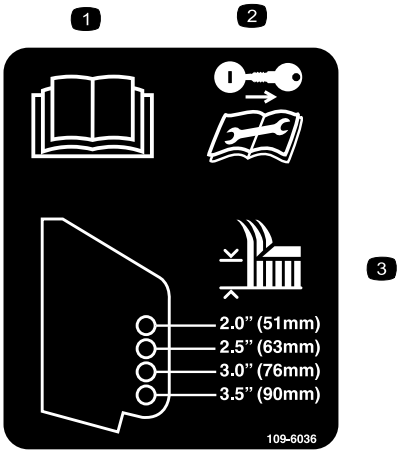

decal109-6036

109-6036

Rear Discharge Models Only

1. Read the Operator's manual
2. Remove the ignition key and read the instructions before servicing or performing maintenance.
3. Height of cut

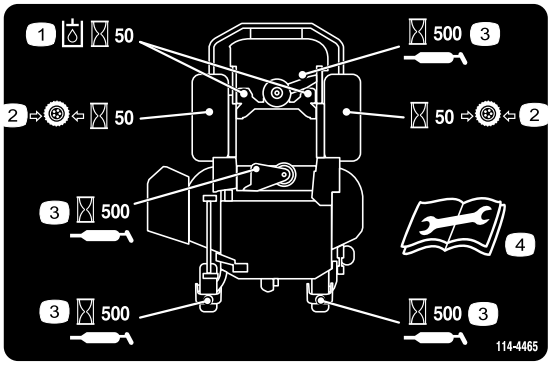

decal114-4465

114-4465

1. Hydraulic fluid service interval—50 hours
2. Tire pressure service interval—50 hours
3. Lubricate service interval—500 hours
4. Read the *Operator's Manual* before servicing or performing maintenance

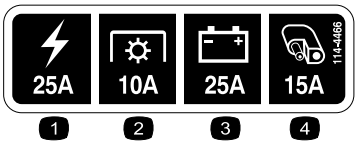

decal114-4466

114-4466

1. Main, 25A
2. PTO, 10A
3. Charge, 25A
4. Auxiliary, 15A

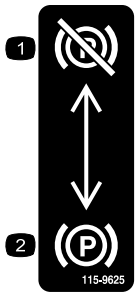

decal115-9625

115-9625

Suspension Models

1. Parking brake—disengaged
2. Parking brake—engaged

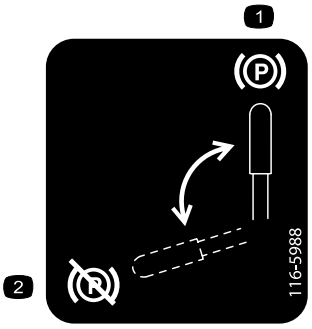

decal116-5988

116-5988

All Except Suspension Models

1. Parking brake—engaged
2. Parking brake—disengaged

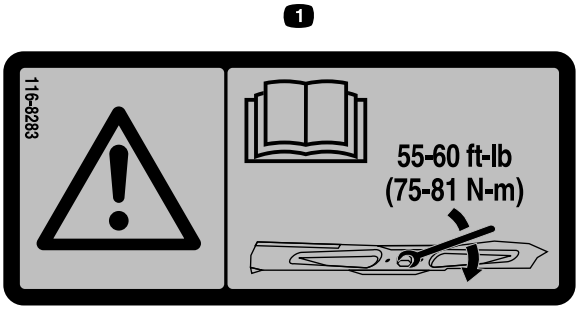

decal116-8283

116-8283

Rear Discharge Models Only

1. Warning—read the Operator's Manual for instructions on torquing the blade bolt/nut to 55-60 ft-lb (75-81 N-m).

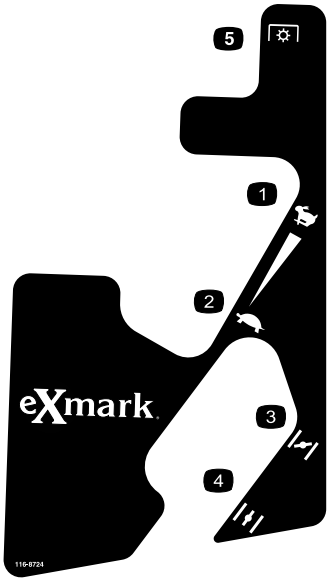

decal116-8724

116-8724

Kawasaki Models

1. Throttle-fast
2. Throttle-slow
3. Choke-on
4. Choke-off
5. PTO

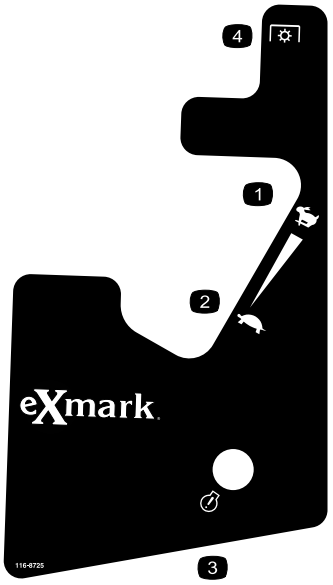

decal116-8725

116-8725

Kohler Models

1. Throttle-fast
2. Throttle-slow
3. PTO
4. Check engine

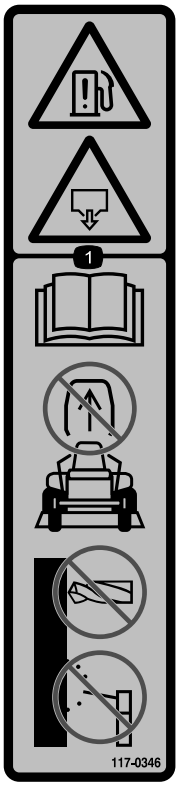

decal117-0346

117-0346

1. Fuel leak hazard—read the *Operator's Manual*; do not attempt to remove the roll bar; do not weld, drill or modify the roll bar in any way.

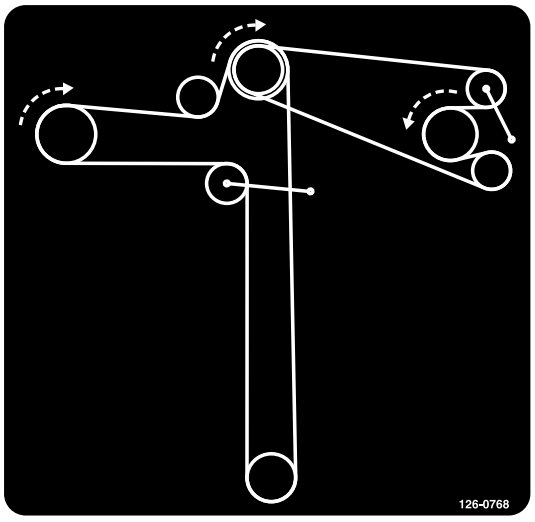

decal126-0768

126-0768

Rear Discharge Models Only



decal126-2055

126-2055

1. Wheel lug nut—torque to 95 ft-lb (129 N-m).
2. Wheel hub nut—torque to 235 ft-lb (319 N-m).
3. Read and understand the Operator's manual before performing maintenance; check torque after first 100 hours and every 500 hours thereafter.



decal133-8062

133-8062



decal135-0664

135-0664

Rear Discharge Models Only

1. Thrown object hazard—keep bystanders away.
2. Cutting/dismemberment of hand and feet—stay away from moving parts; keep all guards and shields in place.

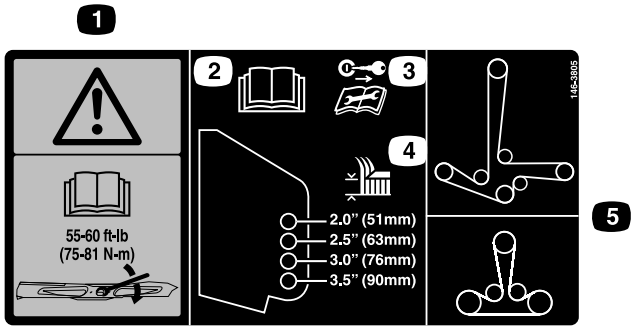

decal146-3805

146-3805

Side Discharge Models Only

1. Warning—read the Operator's Manual for instructions on torquing the blade bolt/nut to 55-60 ft-lb (75-81 N-m).
2. Read the Operator's manual
3. Remove the ignition key and read the instructions before servicing or performing maintenance.
4. Height of cut
5. Belt routing

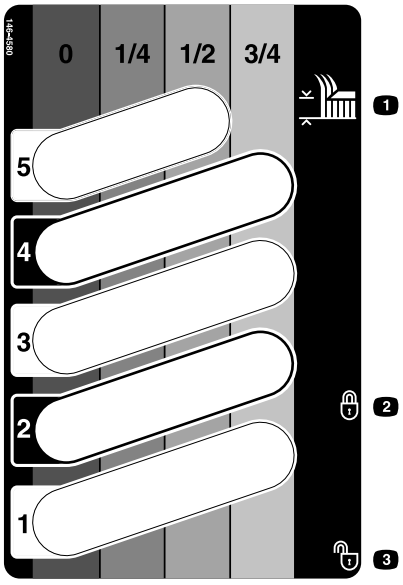

decal146-4580

146-4580

1. Height of cut
2. Lock
3. Unlock

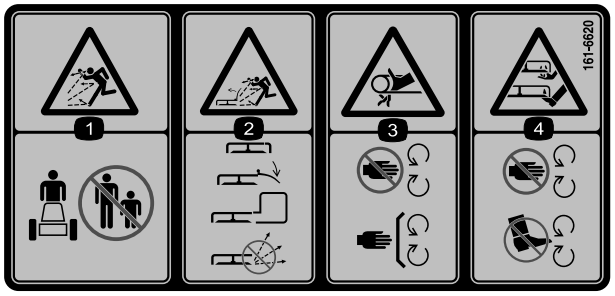

decal161-6620

161-6620

1. Thrown object hazard—keep bystanders away from the machine.
2. Thrown object hazard, raised deflector—lower the deflector before operating the machine; always operate the machine with the deflector, discharge cover, or grass collection system in place; do not operate the machine with the discharge opening uncovered.
3. Entanglement hazard—keep away from moving parts; keep all guards and shields in place.
4. Severing hazard of hand or foot—keep hands and feet away from moving parts.

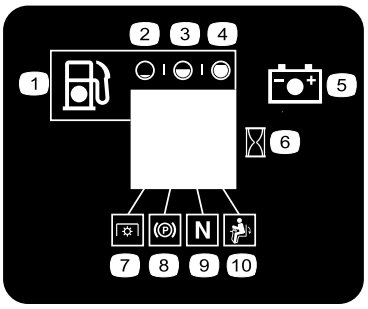

g224113

Message Display

1. Fuel
2. Empty
3. Half
4. Full
5. Battery
6. Hour meter
7. PTO
8. Parking brake
9. Neutral
10. Operator presence switch

Side Discharge Models Only:

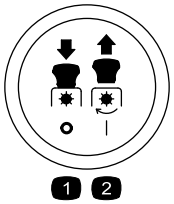

decalptosymbols

PTO Switch Symbols

1. PTO–disengage
2. PTO–engage



decalreadophydoil

Recommended Hydro Oil

1. Read the Operator's Manual for recommended hydro oil.



decal132-5080

132-5080

"C1" Model Only

1. Firmest position
2. Softest position

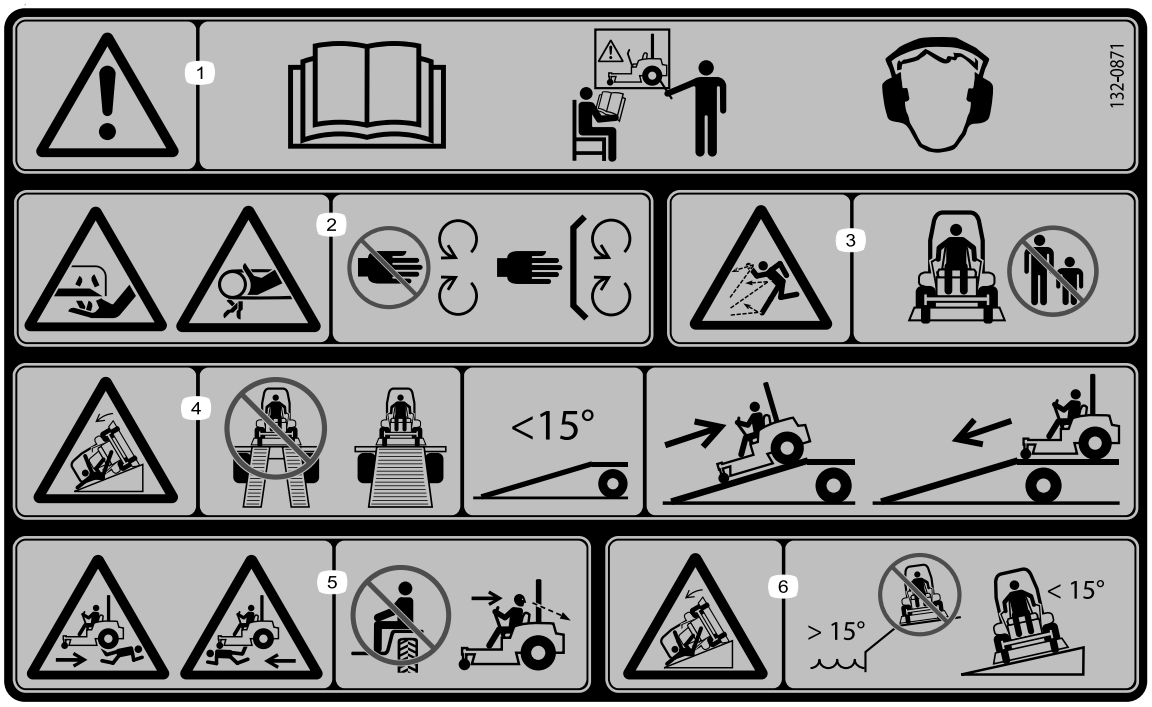

decal132-0871

132-0871

This machine complies with the industry standard stability test in the static lateral and longitudinal tests with the maximum recommended slope indicated on the decal. It is important that each operator review the slope operation instructions in the operator's manual and review the conditions in which the machine is being operated to determine if the machine may be operated in the conditions that day and on that site. Changes to terrain can result in a change in slope operation for any machine.

1. Warning—read the *Operator's Manual*; do not operate this machine unless you are trained; wear hearing protection.
2. Cutting and pinching hazard—keep hands and feet away from moving parts; keep all guards and shields in place.
3. Thrown object hazard—keep bystanders away.
4. Ramp hazard—when loading onto a trailer, do not use dual ramps; only use a singular ramp wide enough for the machine and that has an incline less than 15 degrees; back up the ramp (in reverse) and drive forward off the ramp.
5. Bodily harm hazard—do not carry passengers; look behind you when mowing in reverse.
6. Tipping hazard on slopes—do not use on slopes near open water; do not use on slopes greater than 15 degrees.

Specifications

Systems

Engine

- Engine Specifications: See your Engine Owner's Manual
- Engine Oil Type: Exmark 4–Cycle Premium Engine Oil
- RPM:
  - Full Speed: 3750 ±50 RPM (PTO not engaged)
  - Idle: 1500 +100/-250 RPM

Fuel System

- Capacity: 12.0 gal. (45.4 L)
- Fuel Recommendations:
  - For best results, use only clean, fresh, unleaded gasoline with an octane rating of 87 or higher ((R+M)/2 rating method).
  - Oxygenated fuel with up to 10% ethanol or 15% MTBE by volume is acceptable.
  - **Do Not** use ethanol blends of gasoline (such as E15 or E85) with more than 10% ethanol by volume. Performance problems and/or engine damage may result which may not be covered under warranty.
  - **Do Not** use gasoline containing methanol.
  - **Do Not** store fuel either in the fuel tank or fuel containers over the winter unless a fuel stabilizer is used.
  - **Do Not** add oil to gasoline.
- Fuel Filter: Replaceable In-line
- Fuel Shut-Off Valve:

  All Units: 1/4 turn ("ON", "OFF").
- Fuel level eight segment display — right hand control panel.
- Low fuel indicator light.

Electrical System

- Charging System: Flywheel Alternator
- Charging Capacity:
  - Kawasaki: 15 amps
  - Kohler EFI: 20 amps
- Battery Type: BCI Group U1
- Recommended Minimum Battery CCA: 260 CCA
- Battery Voltage: 12 Volt
- Low Voltage Light/Error Message — RH control panel
- Polarity: Negative Ground
- Fuses:

  All Models:
  - 25 amp main fuse
  - 25 amp charging system fuse
  - 10 amp PTO fuse
  - 15 amp accessory fuse

Safety Interlock System

- LCD indicators appear for the PTO, park brake, drive levers, and operator presence in the message display on the RH control panel.
- PTO must be disengaged, brake engaged, and motion control levers out (neutral lock) to start engine. (It is not necessary for the operator to be in the seat to start the engine.)
- Operator must be in seat when PTO is engaged, brake is disengaged, or motion control levers are moved in or engine will stop.
- Engine will stop if either the left, the right, or both levers are moved from neutral lock position while brake is engaged.

Operator Controls

- Steering and Motion Control:

  Note: Motion control levers are adjustable to two heights.

  – Separate levers, on each side of the console, control speed and direction of travel of the respective drive wheels.

  – Steering is controlled by varying the position of the levers relative to each other.

  – Moving motion control levers outward (in slots) locks the drive system in neutral.
- PTO Engagement Switch: Engages electric clutch (to drive belt) which engages mower blades.
- Parking Brake Lever: Engages/Disengages parking brake.
- Deck Height Adjustment Pin: Sets cutting height to desired position.
- Deck Lift Pedal: Foot pedal that lifts deck.
- Transport Lock:

  – Latching position: Automatically latches at the transport position.

  – Unlatching position: Deck does not latch at the transport position.

Seat

- All Models except "C1":

  Deluxe suspension (adjustable spring suspension) seat with high back, padded flip-up armrests, and integral safety switch. Seat height remains the same.
- "C1" Models:

  Standard seat with high back, extra wide foam padded seat cushion with internal suspension, thick bolstering, two-tone cover, padded flip-up armrests, integral safety switch, and Seat Isolation System for reduced vibration, to enhance ride of standard seat.
- Mounting:

  – All Models except "C1":

  Adjustable fore and aft on seat tracks.

  – "C1" Models:

  Hinged seat frame to tilt up seat. Held in tilted position with a prop rod. Adjustable fore and aft on seat tracks.

  All Models Except "C1" Models:

  Adjustable fore and aft on seat tracks.
- Seat Safety Switch: Integrated seat switch. Time delay seat switch eliminates rough ground cut-outs.

Hydrostatic Ground Drive System

- Two unitized hydrostatic transmissions:

  – 12cc Parker axial piston pump

  – 240cc Parker geroler motor
- Hydraulic Oil Type: Exmark Premium Hydro Oil.
- Hydraulic Oil Capacity: 52 oz (1.5 L) per side
- Hydraulic Filter: P/N 116-0164
- Speeds:

  – 0-10 mph (16.1 km/hr) forward.

  – 0-5.5 mph (8.9 km/hr) reverse.
- Drive wheel release valves allow machine to be moved when engine is not running.

Tires and Wheels

Drive		
Pneumatic (Air filled)		
Deck Size	52	60 & 72
Quantity	2	2
Tread	GrassMaster	GrassMaster
Size	23 x 9.50-12	24 x 12.00-12
Ply Rating	4	4
Pressure	13 psi (90 kPa)	13 psi (90 kPa)

Front Caster	
Semi-Pneumatic	
Quantity	2
Tread	Smooth
Size (52, 60, and 72 Decks)	13 x 6.50-6

Cutting Deck

- Cutting Width:
  - 52 inch Deck: (132.1 cm)
  - 60 inch Deck: (152.4 cm)
  - 72 inch Deck: (182.9 cm)
- Discharge:
  - Side Discharge: Non "R" models
  - Rear Discharge: "R" models
- Blade Size: (3 ea.)
  - 52 inch Deck: 18.00 inches (45.7 cm)
  - 60 inch Deck: 20.50 inches (52.1 cm)
  - 72 inch Deck: 24.50 inches (62.2 cm)
- Blade Spindles: Solid steel spindles with .984 inch (25 mm) I.D. bearings.
- Deck Drive:

  Electric clutch:
  - 52 inch, 60R, 72R Decks: "B" Section belt with self-tensioning idler.
  - 60 and 72 inch Decks: 5V Section belt with self-tensioning idler.
- Deck:
  - Side Discharge: Full floating deck is attached to out-front support frame. Anti-scalp rollers provide maximum turf protection. Deck design allows for bagging, mulching or side discharge.
    - ◊ 52 inch Deck: 3 anti-scalp rollers
    - ◊ 60 inch Deck: 4 anti-scalp rollers
    - ◊ 72 inch Deck: 6 anti-scalp rollers
  - Rear Discharge: Full floating deck is attached to out-front support frame. Anti-scalp rollers and side bumpers provide maximum turf protection. Deck design allows for rear discharge or finish cut (reduced discharge).
    - ◊ 60 inch Deck: 4 anti-scalp rollers
    - ◊ 72 inch Deck: 4 anti-scalp rollers
- Deck Depth—All Deck Series: 5.5 inches (14 cm)
- Cutting Height Adjustment: Foot activated lever is used to adjust the cutting height from 1 inch (2.5 cm) to 5 1/2 inches (14 cm) in 1/4 inch (6.4 mm) increments
- Mulching Kit: Optional.

Dimensions

Overall Width

Side Discharge Models:

	52 inch Deck	60 inch Deck	72 inch Deck
Without Deck	45.7 inches (116.1 cm)	53.0 inches (134.6 cm)	59.1 inches (150.1 cm)
Deflector Up	56.3 inches (143.0 cm)	62.5 inches (158.8 cm)	73.5 inches (186.7 cm)
Deflector Down	64.8 inches (164.6 cm)	72.8 inches (184.9 cm)	84.9 inches (215.6 cm)

Rear Discharge Models:

	60 inch Deck	72 inch Deck
Without Deck	53.0 inches (134.6 cm)	59.1 inches (150.1 cm)
With Deck	66.2 inches (168.1 cm)	78.2 inches (198.6 cm)

Overall Length:

Side Discharge Models:

	52 inch Deck	60 inch Deck	72 inch Deck
Roll Bar - Up	79.2 inches (201.2 cm)	83.1 inches (211.1 cm)	86.1 inches (218.7 cm)
Roll Bar - Down	80.9 inches (205.5 cm)	84.8 inches (215.4 cm)	87.8 inches (223.0 cm)

Rear Discharge Models

	60 and 72 Inch Decks
Roll Bar - Up	87.2 inches (221.5 cm)
Roll Bar - Down	89.2 inches (226.61 cm)

Overall Height:

All Models Except "C1"

Roll Bar - Up	Roll Bar - Down
70.5 inches (179.1 cm)	46.8 inches (118.9 cm)

"C1" Models

Roll Bar - Up	Roll Bar - Down
70.5 inches (179.1 cm)	50.3 inches (127.8 cm)

Tread Width: (Center to Center of Tires, Widthwise)

Side Discharge Models:

	52 inch Deck	60 inch Deck	72 inch Deck
Drive Wheels	36.2 inches (91.9 cm)	41.6 inches (105.7 cm)	43.6 inches (110.7 cm)
Caster Wheels	32.8 inches (83.3 cm)	39.5 inches (100.3 cm)	47.1 inches (119.6 cm)

Rear Discharge Models:

	60 inch Deck	72 inch Deck
Drive Wheels	41.6 inches (105.7 cm)	43.6 inches (110.7 cm)
Caster Wheels	33.0 inches (83.8 cm)	33.0 inches (83.8 cm)

Wheel Base: (Center of Caster Tire to Center of Drive Tire)

Side Discharge Models:

52 inch Deck	60 inch Deck	72 inch Deck
48.0 inches (121.9 cm)	51.6 inches (131.1 cm)	53.6 inches (136.1 cm)

Rear Discharge Models:

60 and 72 inch Decks
54.7 inches (139.0 cm)

Curb Weight:

Models with 52 Inch Side Discharge Decks	1120–1250 lb (508–567 kg)
Models with 60 Inch Side Discharge Decks	1110–1372 lb (503–622 kg)
Models with 72 Inch Side Discharge Decks	1220–1412 lb (553–640 kg)
Models with 60 Inch Rear Discharge Decks	1280–1410 lb (581–640 kg)
Models with 72 Inch Rear Discharge Decks	1320–1370 lb (599–621 kg)

Accessory Weight Table Worksheet:

Use the table below to determine if extra weight is required for the unit. Identify the accessories and correct deck size and place the corresponding values in the Accessory Score column. If the Total Accessory Score meets the following, add the recommended weight kit.

Note: Rear Discharge and 72 inch side discharge decks do not require a weight kit.

Side Discharge Models Only:

	52 inch Deck	60 inch Deck	Accessory Score
Light Kit	3	2	
Suspension Seat/CRSS	12	3	
Bagger	0	3	
Pneumatic Caster Tires	8	5	
Mulch Kit	-4	-5	
Striper Kit	0	0	
OCD02	-7	-4	
Hitch Kit	2	1	
Sunshade Kit	3	2	
Total Accessory Score			

Total Accessory Score	Required Weight Kit(s)
0 – 9	None required
10 – 19	*116-1173 Under toe board mount weight kit
20 and Higher	*Two 116-1173 Under toe board mount weight kits or one 116-1173 Under toe board mount weight kit and one 116-1238 Front toe board mount weight kit

*52 inch models that have an under toe board weight as standard, can add an additional toe board weight for primary accessory weighting (scores 10-19); and front toe board weight kit for secondary accessory weighting (scores 20 and higher). Other units should install a first under toe board kit for primary accessory weighting (scores 10-19); and a second under toe board kit for secondary accessory weighting (scores 20 and higher).

*Models that have an under toe board mount weight as standard, require 116-1238 front toe board top mount kit instead of 116-1173.

Torque Requirements

Bolt Location	Torque
Blade Drive Sheave Mounting Nut	130-160 ft-lb (176-217 N-m)
Blade Mounting Bolt (lubricate with anti-seize)	50-60 ft-lb (68-81 N-m)
Anti-Scalp Roller Nyloc Nut–Side Discharge Models (See Figure 19)	50–55 ft-lb (68-75 N-m)
Anti-Scalp Roller Nyloc Nut–Rear Discharge Models (See Figure 20)	30-35 ft-lb (41-47 N-m)
Engine Mounting Bolts	27-33 ft-lb (37-45 N-m)
Wheel Lug Nuts	85-105 ft-lb (115-142 N-m)
Wheel Motor Mounting Bolts	67-83 ft-lb (50-113 N-m)
Wheel Hub Slotted Nut	211-260 ft-lb (286-352 N-m)
Rollover Protection System (Roll Bar) 1/2 inch Mounting Bolts	100-110 ft-lb (136-149 N-m)
Clutch Retaining Bolt (secured with threadlocker)	55-60 ft-lb (75-81 N-m)
Rear Discharge Side Bumpers	10-12 ft-lb (14-16 N-m)
Suspension Platform Side pivot 1/2 inch Mounting Nut	70-80 ft-lb (95-108 N-m)
Rear Shock Lower mounting 1/2 inch Mounting Nut	80-90 ft-lb (108-122 N-m)
Suspension Platform Rear Cross Shaft 5/16 inch Retention Bolt	15-19 ft-lb (20-26 N-m)
Suspension Platform Rear Cross Shaft 5/16 inch Bearing Retaining Nut	215-265 in-lb (24-30 N-m)
Cam Lock 1/2 inch Nut	75-85 in-lb (8-10 N-m)
Exhaust Nut O2 Sensor into Muffler	175-200 ft-lb (150–170 N-m)

Product Overview

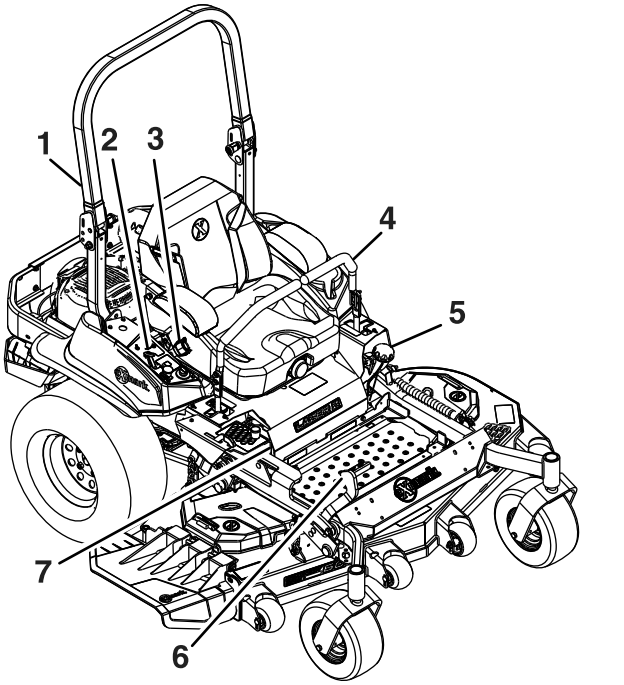

Figure 3

1. Rollover Protection System (ROPS)
2. Engine Controls (right console)
3. Seat belt
4. Motion control levers
5. Fuel cap
6. Height of cut deck lift pedal
7. Parking brake lever

Operation

Note: Determine the left and right sides of the machine from the normal operating position.

Controls

Become familiar with all the controls before starting the engine and operating the machine.

Motion Control Levers

The motion control levers located on each side of the console control the forward and reverse motion of the machine.

Moving the levers forward or backward turns the wheel on the same side forward or reverse respectively. Wheel speed is proportional to the amount the lever is moved.

Moving the levers outward from the center position into the T-slot locks them in the neutral position (Figure 4).

Note: When the motion control levers are in the neutral position, a LCD indicator displays on the message display.

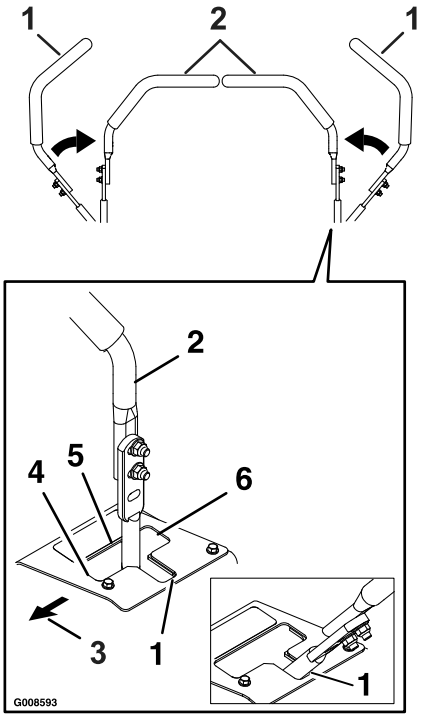

g008593

Figure 4

1. Neutral lock position (handles out)
2. Neutral operate position (handles in)
3. Front of machine
4. Forward
5. Neutral (operate)
6. Reverse

Choke Control (Non-EFI Models)

Located on right console (black lever) (see Figure 5).

The choke is used to aid in starting a cold engine. Moving the choke lever forward will put the choke in the "ON" position and moving the choke lever to the rear, to the detent, will put the choke in the "OFF" position. Do Not run a warm engine with choke in the "ON" position.

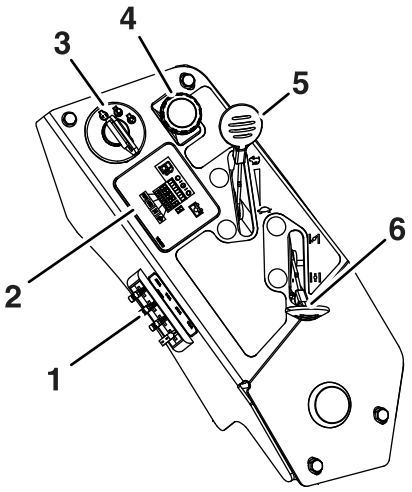

g223866

Figure 5

1. Fuses
2. Message display
3. Ignition switch
4. PTO engagement switch
5. Throttle
6. Choke

Throttle Control

Located on right console (red lever) (see Figure 5 and Figure 6).

The throttle is used to control engine speed. Moving the throttle lever forward will increase engine speed and moving the throttle lever to the rear will decrease engine speed. Moving the throttle forward into the detent is full throttle.

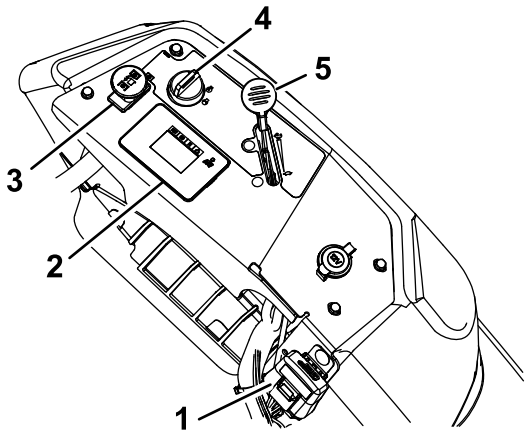

g223877

Figure 6

1. Fuses
2. Message display
3. PTO engagement switch
4. Ignition switch
5. Throttle

Brake Lever

Located on right side of the machine, just to the front of the RH motion control lever.

The brake lever engages a parking brake on the drive wheels.

Note: The LCD indicator appears in the message display on the RH console when the park brake is engaged (see Figure 8).

Pull the lever up and rearward to engage the brake.

Push the lever forward and down to disengage the brake.

The machine must be tied down and brake engaged when transporting.

Ignition Switch

Located on right console.

The ignition switch is used to start and stop the engine. The switch has three positions "OFF", "ON" and "START". Insert key into switch and rotate clockwise to the "ON" position. Rotate clockwise to the next position to engage the starter (key must be held against spring pressure in this position). Allow the key to return to the "on" position immediately after the engine starts.

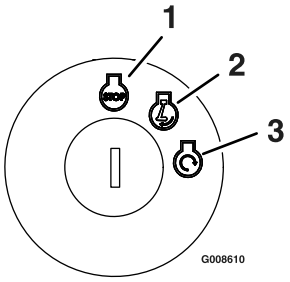

g008610

Figure 7

1. Off
2. On
3. Start

Note: Brake must be engaged, motion control levers out (neutral lock position) and PTO switch disengaged to start engine. (It is not necessary for the operator to be in the seat to start the engine.)

Note: The LCD indicators appear when each control meets the "safe to start" mode (e.g. the indicator turns on when the operator is in the seat.)

Hour Meter

Located on the right console in the message display (reference Figure 5).

The hour meter records the number of hours that the engine has run.

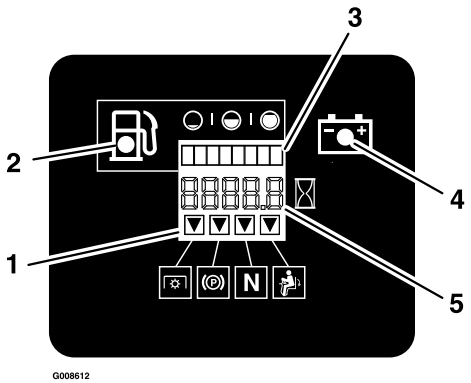

g008612

Figure 8

1. LCD Indicators
2. Low fuel indicator light
3. Fuel level bar display
4. Low voltage indicator light
5. Hour/Voltage display

The hour meter is recording when the decimal point is flashing in Hour/Voltage display.

Hours are displayed when the key is off or when the machine is running.

Note: If the ignition key is turned to the "ON" position for a few seconds before cranking the engine, the battery voltage will display in the area where the hours are normally displayed.

Note: The LCD indicators appear when each control meets the "safe to start" mode (e.g. the indicator turns on when the operator is in the seat.)

Fuel Shut-Off Valve

Located behind and below the seat.

The fuel shut-off valve is used to shut off the fuel when the machine will not be used for a few days, during transport to and from the jobsite, and when parked inside a building.

Align valve handle with the fuel line to open. Rotate 90° to close.

Fuel Gauge

Located on the right console in the message display.

The fuel level is shown on a bar display. The indicator light appears when the fuel level is low (approximately one gallon remaining in the tank).

Drive Wheel Release Valves

⚠ WARNING

Hands may become entangled in the rotating drive components below the engine deck, which could result in serious injury or death.

Stop engine, remove key, allow all the moving parts to stop before accessing the drive wheel release valves.

⚠ WARNING

The engine and hydraulic drive units can become very hot. Touching a hot engine or hydraulic drive units can cause severe burns.

Allow the engine and hydraulic drive units to cool completely before accessing the drive wheel release valves.

Located on the back of the unitized hydraulic drive units, below the engine deck.

During normal operating conditions, the drive wheel release valves are positioned horizontally. If the machine has to be pushed by hand, the valves must be in the "released" position (see Figure 9).

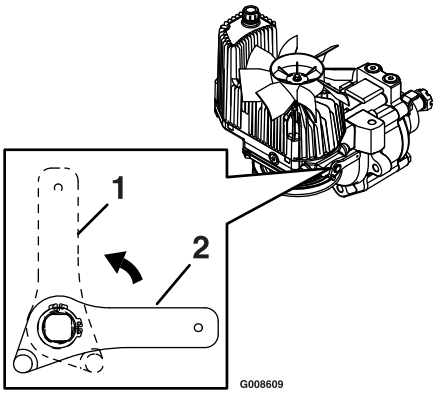

g008609

Figure 9
Cooling Fan Configuration Shown

1. Handle in "released" position
2. Handle in "operating" position

To release the drive system (see item 1 in Figure 9), rotate the handle 1/4 turn to the vertical position until it hits against the stop.

To reset the drive system (see item 2 in Figure 9), rotate the handle 1/4 turn to the horizontal position until it hits against the stop.

Note: The handle must be horizontal and against the stop for operation.

Do Not tow machine.

PTO Engagement Switch

Located on right console (see Figure 5 and Figure 6).

Switch must be pulled out (up) to engage the blades. Switch is pushed in to disengage the blades.

The LCD indicator will appear when the PTO is disengaged (see Figure 8).

Low Voltage Indicator

Located on the right console in the message display (see Figure 5 and Figure 8).

A low voltage condition (less than 12.3 volts) exists when the LCD indicator appears on the message display while the engine is running.

If the ignition key is turned to the "ON" position for a few seconds before cranking the engine, the battery voltage will display in the area where the hours are normally displayed.

Note: The indicator normally appears when the engine is off and the key switch is turned to the "ON" position.

Deck Lift Pedal

Located at the right front corner of the floor pan.

Push the pedal forward with your foot to raise the cutting deck. Allow the pedal to move rearward to lower the cutting deck to the cut height that has been set.

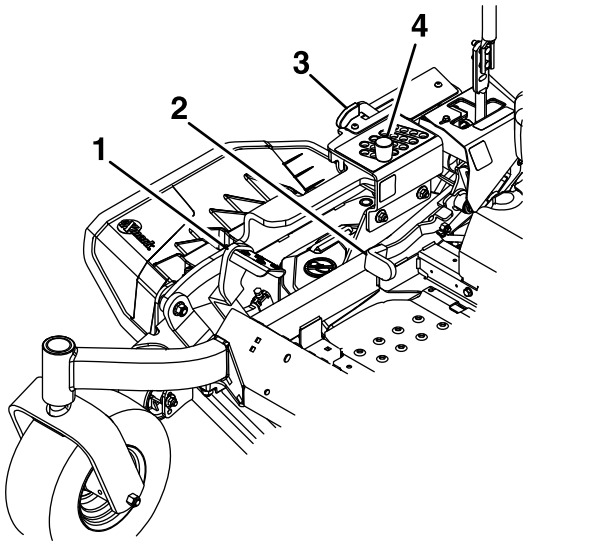

Figure 10

1. Foot pedal
2. Park brake
3. Transport lock handle
4. Height of cut pin

Transport Lock Handle

Located next to the RH motion control lever (reference Figure 10).

The transport latching position will automatically latch when the cutting deck is raised to the transport position using the deck lift pedal.

Pulling the transport lock handle rearward will release the lock and allow the deck to lower to the predetermined cut height when the pedal is lowered.

Electronic Control Unit Malfunction Indicator (EFI Models Only)

The malfunction indicator light (MIL) is the light located in the right console panel–the right light below the throttle control.

The electronic control unit (ECU) continuously monitors operation of the EFI system. If a problem or fault within the system is detected, the MIL is illuminated. Follow the troubleshooting steps outlined in the engine operator's manual if the MIL is illuminated.

Before Operation

Before Operation Safety

- Evaluate the terrain to determine what accessories and attachments are needed to properly and safely perform the job. Only use accessories and attachments approved by Exmark.
- Inspect the area where the machine is to be used and remove all rocks, toys, sticks, wires, bones, and other foreign objects. These can be thrown or interfere with the operation of the machine and may cause personal injury to the operator or bystanders.
- This mower was designed for one operator only. Do not carry passengers.
- Wear appropriate personal protective equipment such as safety glasses, long pants, substantial slip-resistant footwear, and hearing protection. Tie back long hair and avoid loose clothing and loose jewelry which may get tangled in moving parts.
- This machine produces sound levels in excess of 85 dBA at the operator's ear and can cause hearing loss through extended periods of exposure. Wear hearing protection when operating this machine.
- Check that the following items are in place and in proper working condition: the operator presence controls, safety switches, guards, shields, discharge deflector and/or the entire grass catcher system. Do not operate the machine unless they are in proper working condition. Replace worn or deteriorated parts with genuine Exmark parts when necessary.

⚠ DANGER

It is essential that operator safety mechanisms be connected and in proper operating condition prior to use. Contacting the blade will result in serious personal injury.

Shut off the engine, remove the key, and wait for all moving parts to stop before leaving the operating position. When the key is turned to the "OFF" position, the engine should shut off and the blade should stop. If not, stop using the machine immediately and contact an Authorized Service Dealer.

- Do Not operate the mower when people, especially children, or pets are in the area. Shut

off the machine and attachment(s) if anyone enters the area.

- Do Not operate the machine without the entire grass collection system, discharge deflector, or other safety devices in place and in proper working condition. Grass catcher components are subject to wear, damage and deterioration, which could expose moving parts or allow objects to be thrown. Frequently check for worn or deteriorating components and replace them with the manufacturer's recommended parts when necessary.

Fuel Safety

⚠ DANGER

Gasoline is extremely flammable and vapors are explosive.

A fire or explosion from gasoline can burn you, others, and cause property damage.

- **Fill the fuel tank outdoors on level ground, in an open area, when the engine is cold. If fuel is spilled, Do Not attempt to start the engine. Move away from the area of the spill and avoid creating any source of ignition until fuel vapors have dissipated.**
- **Do Not refill the fuel tank or drain the machine indoors or inside an enclosed trailer.**
- **Never smoke when handling gasoline, and stay away from an open flame or where gasoline fumes may be ignited by spark.**
- **Add fuel before starting the engine. Never remove the cap of the fuel tank or add fuel when engine is running or when the engine is hot.**
- **Store gasoline in an approved container and keep it out of the reach of children.**
- **Do Not operate without entire exhaust system in place and in proper working condition.**

- In certain conditions during fueling, static electricity can be released causing a spark which can ignite gasoline vapors.
  - Do not fill containers inside a vehicle or on a truck or trailer bed with a plastic liner. Always place containers on the ground and away from your vehicle before filling.
  - When practical, remove gas-powered equipment from the truck or trailer and refuel the equipment with its wheels on the ground. If this is not possible, then refuel such equipment on a truck or trailer from a portable container, rather than from a gasoline dispenser nozzle.
  - If a gasoline dispenser nozzle is used, keep the nozzle in contact with the rim of the fuel tank or container opening at all times until fueling is complete. Do Not use a nozzle lock open device.
- Do Not overfill the fuel tank. Fill the fuel tank to the bottom of the filler neck. The empty space in the tank allows gasoline to expand. Overfilling may result in fuel leakage or damage to the engine or emission system.
- Gasoline is harmful or fatal if swallowed. Long-term exposure to vapors may cause serious injury and illness.
  - Avoid prolonged breathing of vapors.
  - Keep face away from nozzle and gas tank/container opening.
  - Keep away from eyes and skin.

⚠ CAUTION

Fuel tank vent is located inside the roll bar tube. Removing or modifying the roll bar could result in fuel leakage and violate emissions regulations.

- **Do Not remove roll bar.**
- **Do Not weld, drill, or modify roll bar in any way.**

- To help prevent fires:
  - Keep engine and engine area free from accumulation of grass, leaves, excessive grease or oil, and other debris which can accumulate in these areas.
  - Clean up oil and fuel spills and remove fuel soaked debris.
  - Allow the machine to cool before storing the machine in any enclosure. Do not store the machine or fuel container, or refuel, where there is an open flame, spark, or pilot light such as on a water heater or other appliance.

Operating Instructions

During Operation Safety

General Safety

The operator must use their full attention when operating the machine. **Do Not** engage in any activity that causes distractions; otherwise, injury or property damage may occur.

⚠ WARNING

Operating engine parts, especially the muffler, become extremely hot. Severe burns can occur on contact and debris, such as leaves, grass, brush, etc. can catch fire.

Clean the machine as stated in the Maintenance section. Keep engine and engine area free from accumulation of grass, leaves, excessive grease or oil, and other debris which can accumulate in these areas.

- Operate the engine only in well-ventilated areas. Exhaust gases contain carbon monoxide, which is an odorless deadly poison.
- Do not operate the machine while ill, tired, or under the influence of alcohol or drugs.
- Operate the machine only in good visibility and appropriate weather conditions. Do not operate the machine when there is the risk of lightning.
- Keep away from holes, ruts, bumps, rocks, and other hidden hazards. Use care when approaching blind corners, shrubs, trees, tall grass or other objects that may hide obstacles or obscure vision. Uneven terrain could overturn the machine.
- Start the engine with your feet well away from the blades.
- Do not operate the machine without all safety shields, guards, switches, and other devices in place and in proper working condition.
- Keep your hands and feet away from the moving parts. Keep clear of the discharge opening.
- Do not mow with the discharge deflector raised, removed, or altered unless there is a grass-collection system or mulch kit in place and working properly.
- Never raise the deck with blades running.
- Be aware of the mower discharge path and direct discharge away from others. Avoid discharging material against a wall or obstruction as the material may ricochet back toward the operator. Stop the blades, slow down, and use caution when crossing surfaces other than grass and when transporting the mower to and from the area to be mowed.
- Be alert, slow down and use caution when making turns. Do not mow in reverse unless it is absolutely necessary. Always look down and behind you before moving the machine in reverse.
- Park the machine on level ground. Stop engine, wait for all moving parts to stop, and remove key.
  - Before checking, cleaning or working on the mower.
  - After striking a foreign object or abnormal vibration occurs (inspect the mower for damage and make repairs before restarting and operating the mower).
  - Before clearing blockages.
  - Whenever you leave the mower. Do Not leave a running machine unattended.
- Stop engine, wait for all moving parts to stop:
  - Before refueling.
  - Before dumping the grass catcher.
  - Before making height adjustments.
- Tragic accidents can occur if the operator is not alert to the presence of children. Children are often attracted to the machine and the mowing activity. Never assume that children will remain where you last saw them.
  - Keep children out of the mowing area and under the watchful care of another responsible adult, not the operator.
  - Be alert and turn the machine off if children enter the area.
  - Before and while backing or changing direction, look behind, down, and side-to-side for small children.
  - Never allow children to operate the machine.
  - Do Not carry children, even with the blades shut off. Children could fall off and be seriously injured or interfere with the safe operation of the machine. Children that have

been given rides in the past could suddenly appear in the working area for another ride and be run over or backed over by the machine.

- Do not use the machine as a towing vehicle unless it has a hitch installed. Attach towed equipment to the machine only at the hitch point.

Slope Safety

- Slopes are a major factor related to loss of control and rollover accidents, which can result in severe injury or death. The operator is responsible for safe slope operation. Operating the machine on any slope requires extra caution. Before using the machine on a slope, the operator must:
  - Review and understand the slope instructions in the manual and on the machine.
  - Use an angle indicator to determine the approximate slope angle of the area.
  - Never operate on slopes greater than 15 degrees.
  - Evaluate the site conditions of the day to determine if the slope is safe for machine operation. Use common sense and good judgment when performing this evaluation. Changes in the terrain, such as moisture, can quickly affect the operation of the machine on a slope.
- Identify hazards at the base of the slope. Do Not operate the machine near drop offs, ditches, embankments, water or other hazards. The machine could suddenly roll over if a wheel goes over the edge or the edge collapses. Keep a safe distance (twice the width of the machine) between the machine and any hazard. Use a walk behind machine or a hand trimmer to mow the grass in these areas.

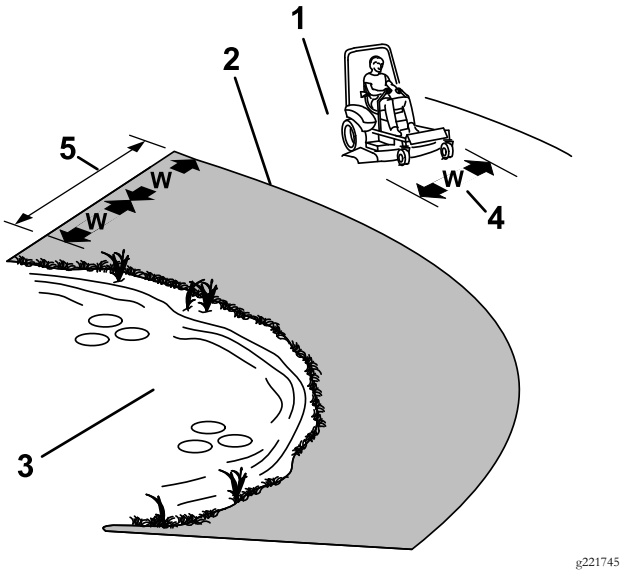

Figure 11

1. Safe Zone-Use the mower here on slopes less than 15 degrees
2. Danger Zone-Use a walk-behind mower and/or hand trimmer on slopes greater than 15 degrees
3. Water
4. W=width of the machine
5. Keep a safe distance (twice the width of the machine) between the machine and any hazard.

- Avoid starting, stopping or turning the machine on slopes. Avoid making sudden changes in speed or direction; turn slowly and gradually.
- Do Not operate a machine under any conditions where traction, steering or stability is in question. Be aware that operating the machine on wet grass, across slopes or downhill may cause the machine to lose traction. Loss of traction to the drive wheels may result in sliding and a loss of braking and steering. The machine can slide even if the drive wheels are stopped.
- Remove or mark obstacles such as ditches, holes, ruts, bumps, rocks or other hidden hazards. Tall grass can hide obstacles. Uneven terrain could overturn the machine.
- Use extra care while operating with accessories or attachments, such as grass collection systems. These can change the stability of the machine and cause a loss of control. Follow directions for counter weights.
- Keep the deck lowered to the ground while operating on slopes. Raising the deck while operating on slopes can cause the machine to become unstable.

Rollover Protection System (ROPS) Safety

⚠ WARNING

There is no rollover protection when the ROPS (roll bar) is down. Wheels dropping over edges, ditches, steep banks, or water can cause rollovers, which may result in serious injury, death or drowning.

- **Do Not remove the ROPS.**
- **Keep the roll bar in the fully raised and locked position and always wear your seat belt whenever the roll bar is up.**
- **Lower the roll bar only when absolutely necessary.**
- **Do Not wear seat belt when the roll bar is down.**
- **Drive slowly and carefully.**
- **Raise the roll bar as soon as clearance permits.**
- Be certain that the seat belt can be released quickly in the event of an emergency.
- Check carefully for overhead clearances (i.e. branches, doorways, and electrical wires) before driving under any objects and Do Not contact them.
- In the event of a rollover, take the machine to an Authorized Service Dealer to have the ROPS inspected. Replace damaged ROPS components. Do not repair or alter them.
- Only Exmark approved accessories or attachments may be added to the ROPS.

Raise the Rollover Protection System (ROPS)

Important: The roll bar is an integral and effective safety device. Keep the roll bar in the raised and locked position when operating the mower. Lower the roll bar temporarily only when absolutely necessary.

1. The knob must be completely latched with the tabs interlocking as shown in Figure 12 to lock the roll bar in the raised, operate position.
2. Apply forward pressure to the upper hoop of the roll bar.
3. Pull the knob and rotate 90° to hold in the unlatched position to lower the roll bar.
4. To return to the operate position, raise the roll bar, and then rotate knobs 90° so that the tabs interlock partially. Apply forward pressure to the roll bar upper hoop and observe that the knobs return to the completely latched position.

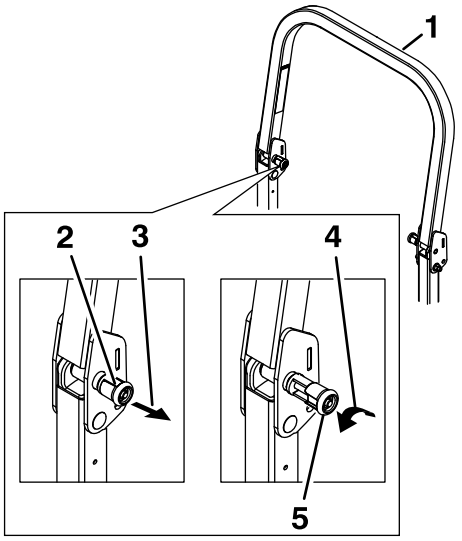

g450916

Figure 12

1. Roll bar upper hoop
2. Knob in “latched” position
3. Pull knob to unlatch
4. Rotate 90° to hold unlatched
5. Knob in “unlatched” position

5. Make sure the knobs are fully engaged with the roll bar in the raised position. The upper hoop of the roll bar may need to be pushed forward or pulled rearward to get both knobs fully engaged (see Figure 13).

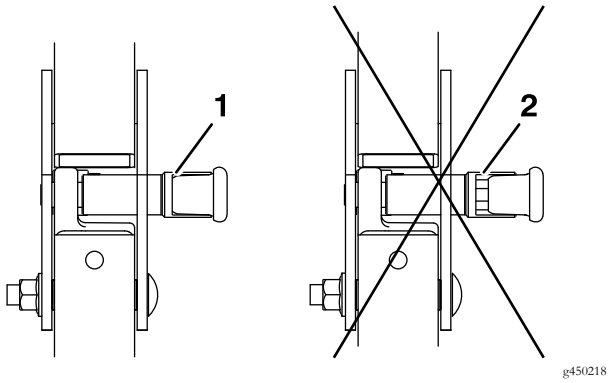

Figure 13

1. Engaged
2. Partially engaged — Do Not operate with ROPS in this condition.

Important: Always use the seat belt with the roll bar in the operate (raised) position. Ensure that the rear part of the seat is secured with the seat latch.

Open the Fuel Shut-Off Valve

Rotate the valve and align with the fuel line to open.

Starting the Engine

1. Move the motion control levers out to the neutral lock position.
2. Pull up and back on the parking brake lever to engage the parking brake.
3. Push down on the PTO switch to the "disengage" position.

   Note: It is not necessary for the operator to be in the seat to start the engine.
4. Place the throttle midway between the "SLOW" and "FAST" positions.
5. On a cold engine, push the choke lever forward into the "ON" position (except Kohler EFI machines).

   On a warm engine, leave the choke in the "OFF" position.
6. Turn ignition switch to the "START" position. Release the switch as soon as the engine starts.

   Important: Do Not crank the engine continuously for more than ten seconds at a time. If the engine does not start, allow a 60 second cool-down period between starting attempts. Failure to follow these guidelines can burn out the starter motor.
7. If the choke is in the "ON" position, gradually return choke to the "OFF" position as the engine warms up.

Engaging the PTO

⚠ DANGER

The rotating blades under the mower deck are dangerous. Blade contact will cause serious injury or death.

Do Not put hands or feet under the mower or mower deck when the blades are engaged.

⚠ DANGER

An uncovered discharge opening will allow objects to be thrown in an operator's or bystander's direction. Also, contact with the blade could occur. Thrown objects or blade contact can cause serious injury or death.

Never operate the mower with the discharge deflector raised, removed, or altered unless there is a grass collection system or mulch kit in place and working properly.

The PTO push-pull switch engages the cutting blades. Be sure that all persons are clear of the mower deck and discharge area before engaging PTO.

Important: Operator must be in seat before the PTO can operate.

Important: Operator must be in seat and the outer deck wings need to be lowered into the mowing position before the PTO will engage.

To engage the PTO, pull the switch outward to engage the blades.

Disengaging the PTO

1. Set the throttle midway between the "SLOW" and "FAST" positions.
2. Push the PTO switch in to disengage the blades.

Stopping the Engine

1. Bring the unit to a full stop.
2. Move the motion control levers out to the neutral lock position.

3. Engage the parking brake.
4. Place the throttle midway between the "SLOW" and "FAST" positions.
5. Disengage the PTO.
6. Allow the engine to run for a minimum of 15 seconds, then turn the ignition switch to the "OFF" position to stop the engine.
7. Remove the key to prevent children or other unauthorized persons from starting engine.
8. Close the fuel shut-off valve when the machine will not be in use for a few days, when transporting, or when the unit is parked inside a building.

Driving the Machine

⚠ CAUTION

Machine can spin very rapidly by positioning one lever too much ahead of the other. Operator may lose control of the machine, which may cause damage to the machine or injury.

- **Use caution when making turns.**
- **Slow the machine down before making sharp turns.**

Important: To begin movement (forward or backward) the operator must be in the seat, the brake lever must be disengaged (pushed down) before the motion control levers can be moved in or the engine will stop.

When the motion control levers are positioned fully outward (apart) in the T-slot, the drive system is in the neutral lock position (Figure 14).

Note: The "N" LCD indicator appears when both levers are in the neutral lock position.

When the motion control levers are moved directly inward (together) the drive system is in the neutral operate position.

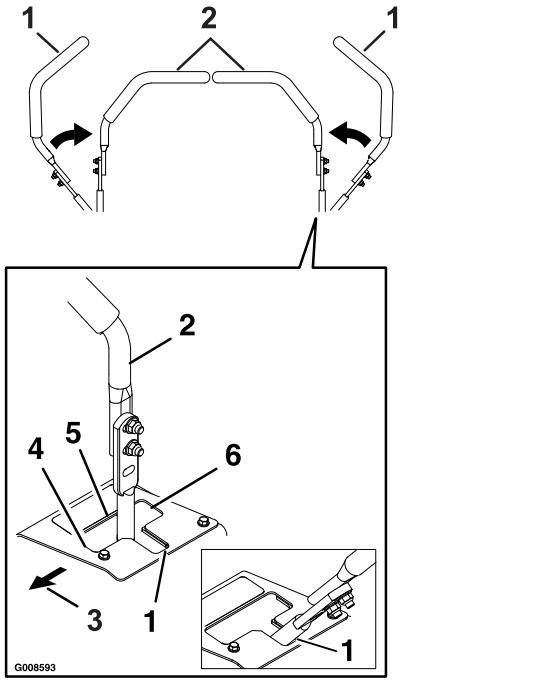

g008593

Figure 14

1. Neutral lock position (handles out)
2. Neutral operate position (handles in)
3. Front of Unit
4. Forward
5. Neutral (operate)
6. Reverse

Driving Forward

1. Release the parking brake.
2. Move the motion control levers inward to the center to the neutral position.
3. To move forward in a straight line, move both levers forward with equal pressure.

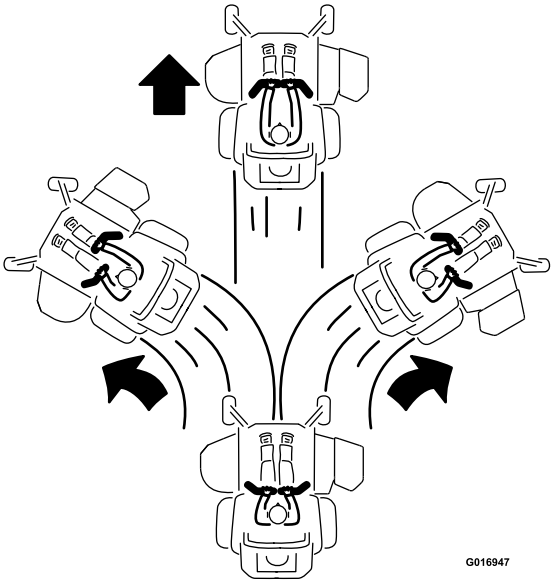

g016947

Figure 15

To turn left or right, pull the motion control lever back toward neutral in the desired turn direction.

The machine will move faster the farther the motion control levers are moved from the neutral position.

4. To stop, position both motion control levers in the neutral operate position.

Driving in Reverse

1. Move the motion control levers inward to the neutral operate position.
2. To move rearward in a straight line, move both levers rearward with equal pressure.

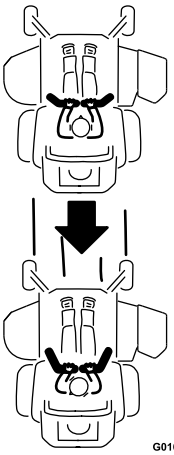

g016948

Figure 16

To turn right, release pressure on the RH motion control lever and the rear of the machine will move towards the rear and to the right.

To turn left, release pressure on the LH motion control lever and the rear of the machine will move towards the rear and to the left.

3. To stop, position both motion control levers in the neutral operate position.

Adjusting the Cutting Height

The cutting height of the mower deck is adjusted from 1 to 5 1/2 inches (2.5 cm to 14 cm) in 1/4 inch (6.4 mm) increments.

1. Stop the machine and move the motion control levers outward to the neutral locked position.
2. Disengage the PTO.
3. Position the transport lock in the latching position.
4. Raise and lock the deck to the 5 1/2 inch (14 cm) transport position (see Figure 17).

   The deck is raised by pushing the foot operated deck lift pedal forward. The pedal is located at the front right corner of the floor pan.

Note: When changing the cutting height positions, always come to a complete stop and disengage the PTO.

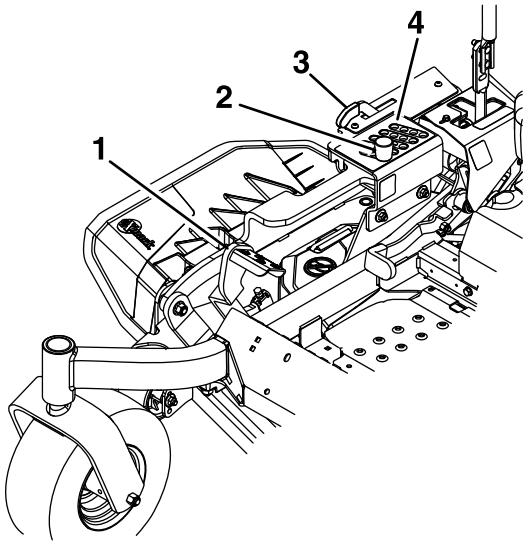

g509177

Figure 17

1. Deck foot pedal
2. Height adjustment pin
3. Transport lock control
4. Height of cut decal

5. Insert the height adjustment pin into the hole corresponding to the desired cutting height.
6. Push the deck lift pedal, release the transport lock and allow the deck to lower to the cutting height.

Adjusting the Anti-Scalp Rollers

It is recommended to change the anti-scalp roller position when the height of cut has changed.

1. Stop the machine and move the motion control levers outward to the neutral locked position.
2. Disengage the PTO.
3. Engage the park brake.
4. Stop the engine, remove the key and wait for all moving parts to stop.
5. After adjusting the height of cut, adjust the anti-scalp rollers by removing the mounting hardware.
6. Place the rollers in one of the positions shown (Figure 18). Rollers will maintain 3/4 inch (19 mm) clearance to the ground to minimize gouging and roller wear or damage.

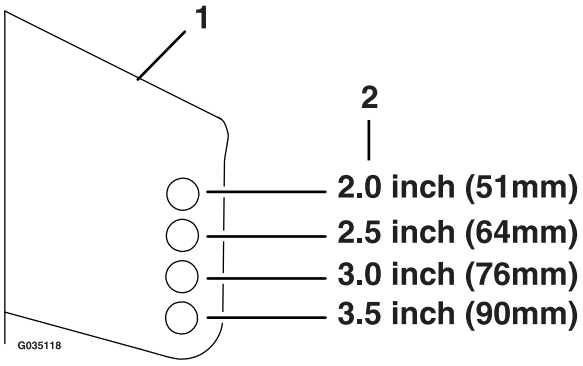

Figure 18

For cutting heights above 3.5 inches (90 mm) use the bottom hole. The rollers will still be effective against scalping.

1. Anti-scalp roller mounting bracket
2. Cutting height

For Maximum Deck Flotation, place the rollers one hole position lower. Rollers should maintain 1/4 inch (6.4 mm) clearance to the ground. **Do Not** adjust the rollers to support the deck.

7. Reinstall the mounting hardware:
   - Side Discharge Models:

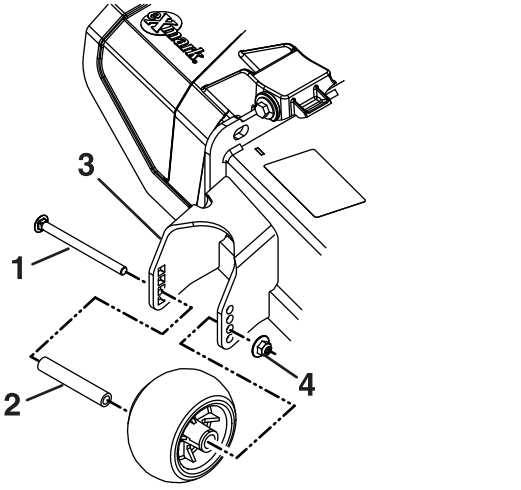

Figure 19

1. 3/8-16 X 5 inch bolt
2. Spacer
3. Front right anti-scalp bracket shown
4. 3/8 inch nyloc nut

- Rear Discharge Models:

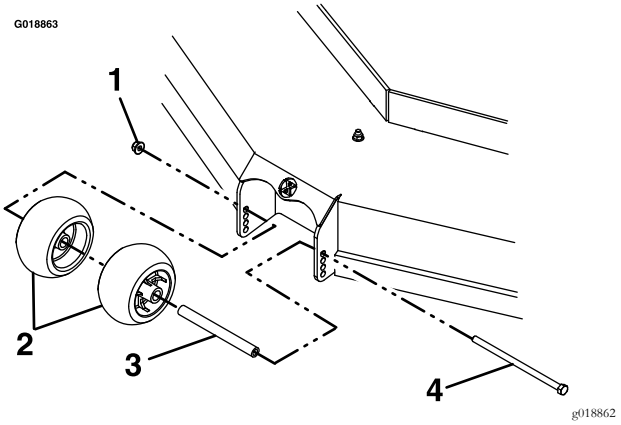

Figure 20

1. 3/8 inch nyloc nut
2. Anti-scalp rollers
3. Spacer
4. Bolt

Adjusting the Side Bumpers—Rear Discharge Models

Mount the side bumpers in the top holes when operating in height of cuts higher than 2 1/2 inches (64 mm) and in the center holes when operating in height of cuts lower than 2 1/2 inches (64 mm).

Note: When bumpers become worn, switch the bumpers to the opposite sides of the mower, flipping them over. This allows the bumpers to be used longer before replacing them.

1. Stop the machine and move the motion control levers outward to the neutral locked position.
2. Disengage the PTO.
3. Engage the park brake.
4. Stop the engine, remove the key and wait for all moving parts to stop.
5. Position the transport lock in the latching position.
6. Remove the bolts and nuts from each bumper.

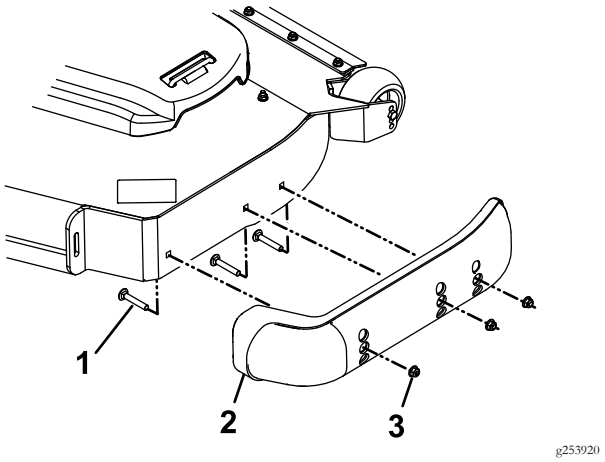

g253920

Figure 21

1. Bolt
2. Bumper
3. Nut

7. Move each bumper to the desired position and secure them with the bolts and nuts.

   Note: Only use the top or center sets of holes to adjust the bumpers. The bottom holes are used when switching sides, at which time they become the top holes on the other side of the mower.

Adjusting the Suspension Seat For "C1" Models Only

The suspension system adjusts to provide a smooth and comfortable ride. Adjusting the rear two shock assemblies is the easiest and quickest adjustment for changing the suspension system. Position the suspension system where you are most comfortable.

1. Unlatch the seat and rotate forward.
2. Adjust the rear shock assemblies by placing the shock assemblies along the slots. The rear shock assemblies have detent positions for reference, but can be positioned anywhere in the slot.

Figure 22 shows the position for a soft or firm ride and the different detent positions.

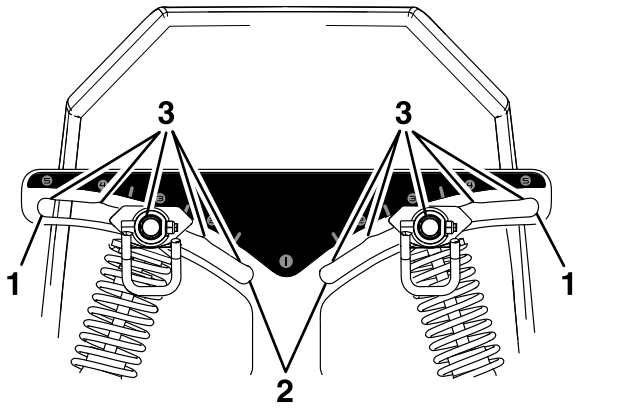

g330350

Figure 22

1. Firmest position
2. Softest position
3. Detents in the slots

To adjust the rear shock assemblies, unlock the lever, position to the desired comfort level, and lock the lever (Figure 23).

Note: Make sure the left and right rear shock assemblies are always adjusted to the same positions.

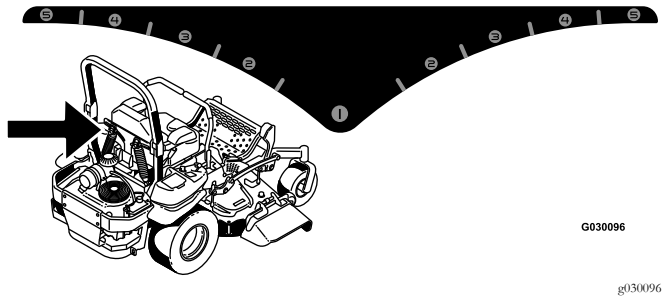

g030096

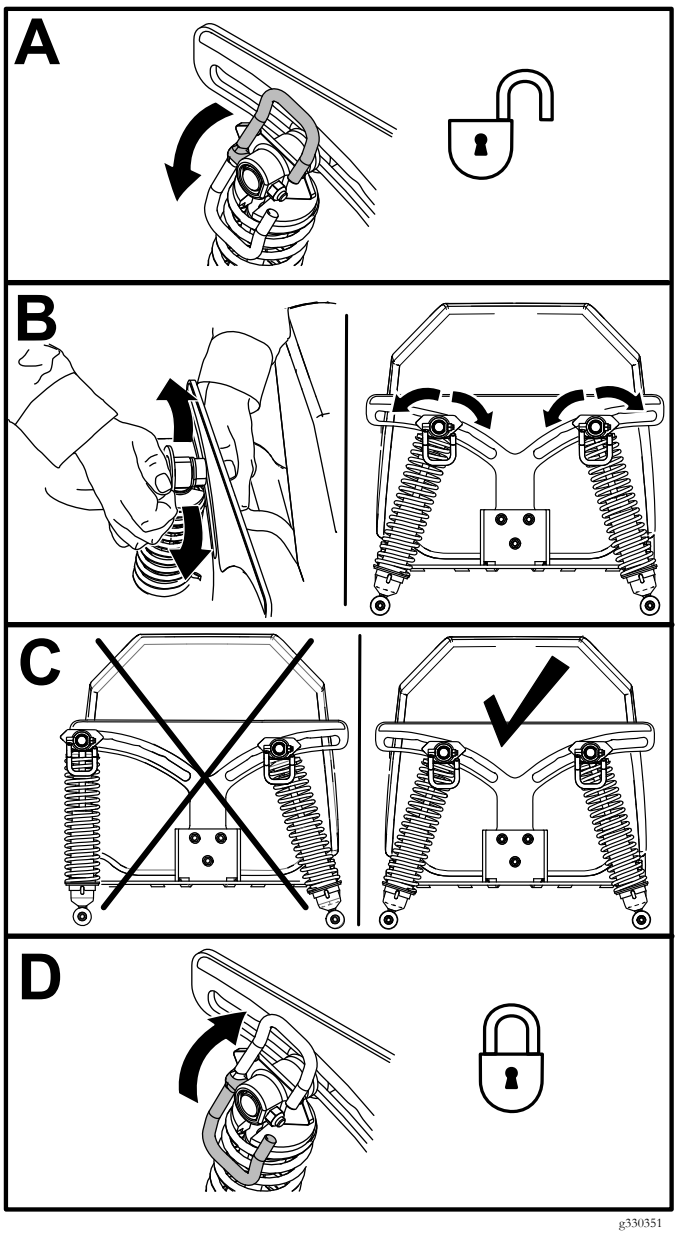

g330351

Figure 23

After Operation

General Safety

- Park machine on level ground, disengage drives, set parking brake, stop engine, and remove key. Wait for all moving parts to stop before leaving the operator's position. Allow the machine to cool before servicing, adjusting, fueling, cleaning, or storing.
- Clean grass, leaves, excessive grease or oil, and other debris from the mower deck, muffler, drives, grass catcher, and engine area to help prevent fires.
- Close the fuel shut-off valve before storing or transporting the machine.

Transporting

Transporting the Machine

Use a heavy-duty trailer or truck to transport the machine. Ensure that the trailer or truck has all necessary lighting and marking as required by law. Thoroughly read all of the safety instructions. Knowing this information could help you, your family, pets, or bystanders avoid injury.

To transport the machine:

- Lock the brake and block the wheels.
- Be sure the fuel shut-off valve is closed.
- Securely fasten the machine to the trailer or truck with straps, chains, cable, or ropes. Only use the four designated tie-down locations on the mower–two on the left side and two on the right (see Figure 25). Use these locations even when transporting the mower with an attached accessory. Using non-designated locations may cause damage to the mower and/or attachment.

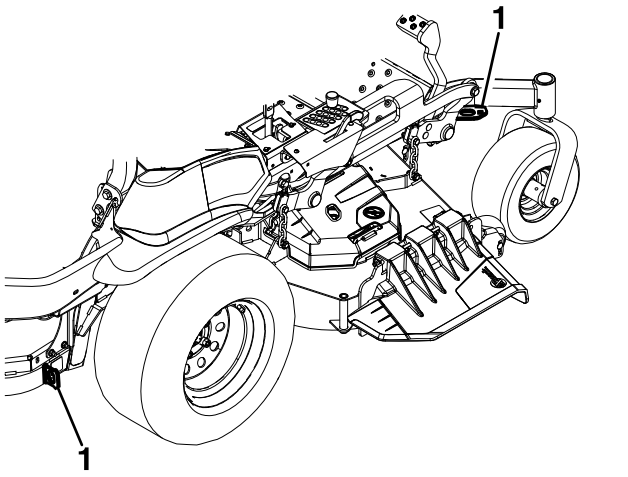

Figure 24

1. Tie-down location

- Secure a trailer to the towing vehicle with safety chains.

⚠ WARNING

Driving on the street or roadway without turn signals, lights, reflective markings, or a slow moving vehicle emblem is dangerous and can lead to accidents causing personal injury.

Do not drive machine on a public street or roadway.

Loading the Machine

Use extreme caution when loading or unloading machines onto a trailer or a truck. Use a full-width ramp that is wider than the machine for this procedure. Back up ramps and drive forward down ramps (Figure 25).

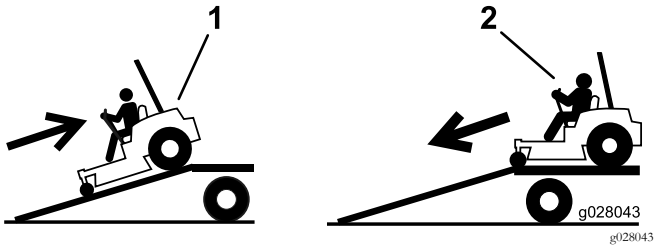

Figure 25

1. Back up ramps
2. Drive forward down ramps

Important: Do not use narrow individual ramps for each side of the machine.

Ensure the ramp is long enough so that the angle with the ground does not exceed 15 degrees (Figure 26). On flat ground, this requires a ramp to be at least four times (4X) as long as the height of the trailer or truck bed to the ground. A steeper angle may cause mower components to get caught as the unit moves from the ramp to the trailer or truck. Steeper angles may also cause the machine to tip or lose control. If loading on or near a slope, position the trailer or truck so that it is on the down side of the slope and the ramp extends up the slope. This will minimize the ramp angle.

⚠ WARNING

Loading a machine onto a trailer or truck increases the possibility of tip-over and could cause serious injury or death.

- **Use extreme caution when operating a machine on a ramp.**
- **Ensure that the ROPS is in the up position and use the seat belt when loading or unloading the machine. Ensure that the ROPS will clear the top of an enclosed trailer.**
- **Use only a full-width ramp; do not use individual ramps for each side of the machine.**
- **Do not exceed a 15-degree angle between the ramp and the ground or between the ramp and the trailer or truck.**
- **Ensure the length of ramp is at least four times (4X) as long as the height of the trailer or truck bed to the ground. This will ensure that ramp angle does not exceed 15 degrees on flat ground.**
- **Back up ramps and drive forward down ramps.**
- **Avoid sudden acceleration or deceleration while driving the machine on a ramp as this could cause a loss of control or a tip-over situation.**

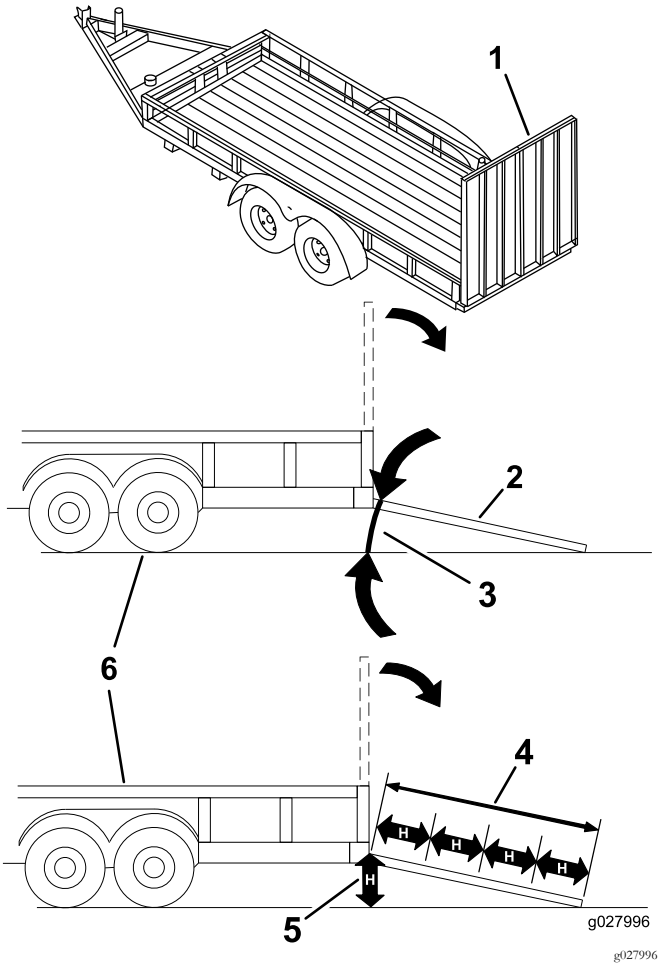

Figure 26

1. Full-width ramp in stowed position
2. Side view of full-width ramp in loading position
3. Not greater than 15 degrees
4. Ramp is at least four times (4X) as long as the height of the trailer or truck bed to the ground
5. H= height of the trailer or truck bed to the ground
6. Trailer

Towing the Machine

- Do not attach towed equipment except at the hitch point.
- Follow the attachment manufacturer's recommendation for weight limits for towed equipment and towing on slopes. Towed weight must not exceed the weight of the machine, operator, and ballast; otherwise hydrostatic transmission failure may occur. Use counterweights or wheel weights as described in the attachment manufacturer's manual.
- Never allow children or others in or on towed equipment.
- On slopes, the weight of the towed equipment may cause loss of traction, increased risk of rollover, and loss of control. Reduce the towed weight and slow down.
- Stopping distance increases with the weight of the towed load. Travel slowly and allow extra distance to stop.
- Make wide turns to keep the attachment clear of the machine.

Maintenance

Note: Determine the left and right sides of the machine from the normal operating position.

Maintenance Safety

- Park machine on level ground, disengage drives, set parking brake, stop engine, and remove key. Wait for all moving parts to stop before leaving the operator's position. Allow the machine to cool before servicing, adjusting, fueling, cleaning, or storing.
- If you leave the key in the switch, someone could accidently start the engine and seriously injure you or other bystanders. Remove the key from the switch before you perform any maintenance.
- Never allow untrained personnel to service machine.
- Disconnect battery or remove spark plug wire before making any repairs. Disconnect the negative terminal first and the positive last. Reconnect positive first and negative last.
- Keep all guards, shields, switches, and all safety devices in place and in proper working condition. Frequently check for worn or deteriorating components and replace them with genuine Exmark parts when necessary.

⚠ WARNING

Removal or modification of original equipment, parts and/or accessories may alter the warranty, controllability, and safety of the machine. Unauthorized modifications to the original equipment or failure to use original Exmark parts could lead to serious injury or death. Unauthorized changes to the machine, engine, fuel or venting system, may violate applicable safety standards such as: ANSI, OSHA and NFPA and/or government regulations such as EPA and CARB.

⚠ WARNING

Hydraulic fluid escaping under pressure can penetrate skin and cause injury. Fluid accidentally injected into the skin must be surgically removed within a few hours by a doctor familiar with this form of injury or gangrene may result.

- **If equipped, make sure all hydraulic fluid hoses and lines are in good condition and all hydraulic connections and fittings are tight before applying pressure to hydraulic system.**
- **Keep body and hands away from pinhole leaks or nozzles that eject high pressure hydraulic fluid.**
- **Use cardboard or paper, not your hands, to find hydraulic leaks.**
- **Safely relieve all pressure in the hydraulic system by placing the motion control levers in neutral and shutting off the engine before performing any work on the hydraulic system.**

For EFI (Electronic Fuel Injection) Models:

⚠ WARNING

Fuel system components are under high pressure. The use of improper components can result in system failure, gasoline leakage and possible explosion.

Use only approved fuel lines and fuel filters for high pressure systems.

- Use care when checking blades. Wrap the blade(s) or wear gloves, and use caution when servicing them. Only replace damaged blades. Never straighten or weld them.
- Do not rely solely on mechanical or hydraulic jacks for support. Use adequate jack stands.
- Carefully release pressure from components with stored energy.

- Keep your hands and feet away from moving parts or hot surfaces. If possible, do not make adjustments with the engine running.
- Keep all parts in good working condition and all hardware tightened, especially the blade-attachment hardware.

Recommended Maintenance Schedule(s)

Maintenance Service Interval	Maintenance Procedure
After the first 5 hours	• Change the engine oil. (Kohler and Kawasaki engines)
After the first 100 hours	• Check the wheel hub slotted nut torque specifications. • Check the wheel lug nuts. • Check the park brake adjustment.
After the first 250 hours	• Change the hydraulic filter and fluid.
Before each use or daily	• Check the engine oil level. • Check the mower blades. • Check the safety interlock system. • Check the rollover protections systems (roll bar) knobs. • Check the seat belt. • Check for loose hardware. • Clean the grass and debris build-up from the machine and cutting deck. • Clean the engine and exhaust system area. • Clean the hydro fan cooling guards, hydro cooling fins, and fan. • Clean the grass build-up from under the cutting deck.
Every 50 hours	• Check the hydraulic oil level. • Check the tire pressures. • Check the condition of the belts. • Check spark arrester (if equipped).
Every 100 hours	• Clean or Replace (if necessary) the primary air cleaner element — check secondary air cleaner element; replace if dirty. (Kohler and Kawasaki engines) (May need more often under severe conditions. See the Engine Owner's Manual for additional information.) • Change the engine oil. (Kohler and Kawasaki engines) (May need more often under severe conditions.) • Lubricate the deck lift pivots. • Remove the engine shrouds and clean the cooling fins.
Every 200 hours	• Check the spark plugs.
Every 250 hours	• Replace the primary air cleaner element — check secondary air cleaner element; replace if dirty. (Kohler and Kawasaki engines) (May need more often under severe conditions. See the Engine Owner's Manual for additional information.)
Every 500 hours	• Replace the secondary air cleaner element (Kohler and Kawasaki engines) (May need more often under severe conditions. See the Engine Owner's Manual for additional information.) • Change the hydraulic filter and fluid (Every 250 hours if using Mobil 1 15W50). • Check the wheel hub slotted nut torque specifications. • Check the wheel lug nuts. • Check the park brake adjustment.
Yearly	• Grease the deck and pump idler pivots. • Grease the front caster pivots.

Periodic Maintenance

Removing or Installing the Floor Pan

⚠ WARNING

You can be seriously injured if you operate the machine with the floor pan removed, or if you do not completely remove the floor pan to perform maintenance on components beneath it.

Do not operate the machine with the floor pan removed. Completely remove the floor pan before you perform maintenance underneath it.

1. To remove the floor pan, lift the floor pan and pull it out of the openings in the frame.

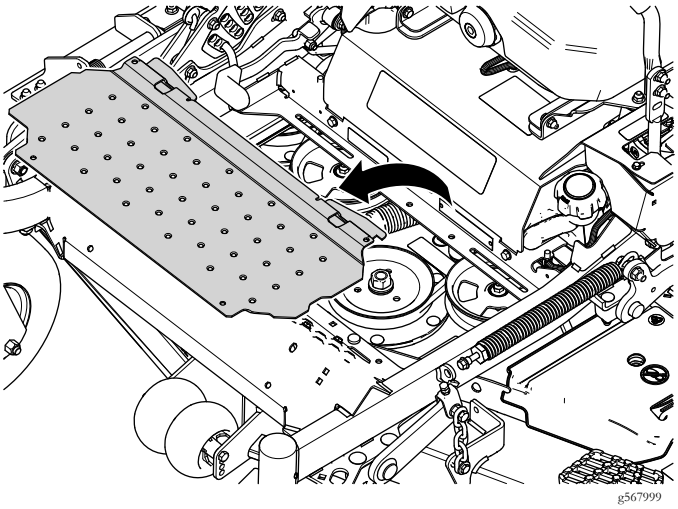

Figure 27

2. To install the floor pan, place the floor pan in the openings in the frame and lower it into place.

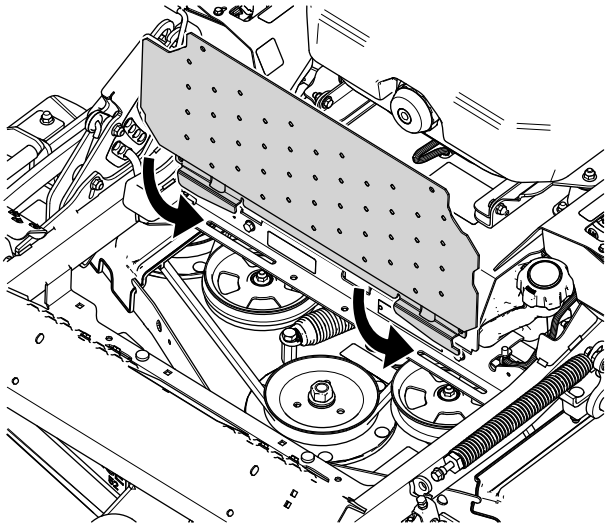

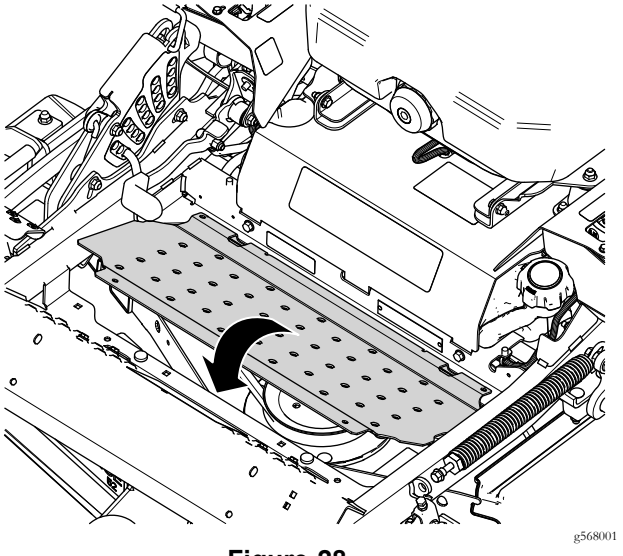

Figure 28

Engine Maintenance

Important: For Kawasaki and Kohler Engines, refer to the Engine Owner's Manual for additional maintenance procedures.

Engine Safety

⚠ WARNING

The engine can become very hot, especially the muffler and exhaust components. Touching a hot engine can cause severe burns.

Allow the engine to cool completely before service or making repairs around the engine area.

Do Not change the engine governor setting or overspeed the engine.

Check Engine Oil Level

Service Interval: Before each use or daily

1. Stop engine and wait for all moving parts to stop. Make sure unit is on a level surface.
2. Check with engine cold.
3. Clean area around dipstick. Remove dipstick and wipe oil off. Reinsert the dipstick according to the engine manufacturer's recommendations. Remove the dipstick and read the oil level.
4. If the oil level is low, wipe off the area around the oil fill cap, remove cap and fill to the "FULL" mark on the dipstick. Exmark 4-Cycle Premium Engine Oil is recommended; refer to the Engine Owner's manual for an appropriate API rating and viscosity. **Do Not** overfill.

Important: Do Not operate the engine with the oil level below the "LOW" (or "ADD") mark on the dipstick, or over the "FULL" mark.

Check Battery Charge

Service Interval: As required

Allowing batteries to stand for an extended period of time without recharging them will result in reduced performance and service life. To preserve optimum battery performance and life, recharge batteries in storage when the open circuit voltage drops to 12.4 volts.

Note: To prevent damage due to freezing, battery should be fully charged before putting away for winter storage.

Charge batteries in an open well ventilated area, away from spark and flames. Unplug charger before connecting or disconnecting from battery. Wear protective clothing and use insulated tools.

⚠ DANGER

Charging or jump starting the battery may produce explosive gases. Battery gases can explode causing serious injury.

- **Keep sparks, flames, or cigarettes away from battery.**
- **Ventilate when charging or using battery in an enclosed space.**
- **Make sure venting path of battery is always open once battery is filled with acid.**
- **Always shield eyes and face from battery.**

⚠ DANGER

Battery electrolyte contains sulfuric acid, which is poisonous and can cause severe burns. Swallowing electrolyte can be fatal or if it touches skin can cause severe burns.

- **Wear safety glasses to shield eyes, and rubber gloves to protect skin and clothing when handling electrolyte.**
- **Do Not swallow electrolyte.**
- **In the event of an accident, flush with water and call a doctor immediately.**

⚠ CAUTION

If the ignition is in the "ON" position there is potential for sparks and engagement of components. Sparks could cause an explosion or moving parts could accidentally engage causing personal injury.

Be sure ignition switch is in the "OFF" position before charging the battery.

Check the voltage of the battery with a digital voltmeter or with the message display. If the ignition key is turned to the "on" position for a few seconds, the battery voltage will be displayed in the area where the hours are normally displayed. Locate the voltage reading of the battery in the table and charge the battery for the recommended time interval to bring the charge up to a full charge of 12.6 volts or greater.

Important: Make sure the negative battery cable is disconnected and the battery charger used for charging the battery should have an output of 16 volts and 7 amps or less to avoid damaging the battery (see chart for recommended charger

settings). This is especially important on Kohler EFI (Electronic Fuel Injection) units. Failure to do so may damage the ECU (Electronic Control Unit).

Voltage Reading	Percent Charge	Maximum Charger Settings	Charging Interval
12.6 or greater	100%	16 volts/7 amps	No Charging Required
12.4 – 12.6	75–100%	16 volts/7 amps	30 Minutes
12.2 – 12.4	50–75%	16 volts/7 amps	1 Hour
12.0–12.2	25–50%	14.4 volts/4 amps	2 Hours
11.7–12.0	0–25%	14.4 volts/4 amps	3 Hours
11.7 or less	0%	14.4 volts/2 amps	6 Hours or More

Important: For EFI machines: Unplug the harness from the ECU before performing any welding on the equipment.

Recommended Jump Starting Procedure

Service Interval: As required

1. Check the weak battery for terminal corrosion (white, green, or blue "snow"), it must be cleaned off prior to jump starting. Clean and tighten connections as necessary.

⚠ CAUTION

Corrosion or loose connections can cause unwanted electrical voltage spikes at anytime during the jump starting procedure.

Do Not attempt to jump start with loose or corroded battery terminals or damage to the engine or EFI may occur.

⚠ DANGER

Jump starting a weak battery that is cracked, frozen, has low electrolyte level, or an open/shorted battery cell, can cause an explosion resulting in serious personal injury.

Do Not jump start a weak battery if these conditions exist.

2. Make sure the booster is a good and fully charged lead acid battery at 12.6 volts or greater. Use properly sized jumper cables (4 to 6 AWG) with short lengths to reduce voltage drop between systems. Make sure the cables are color coded or labeled for the correct polarity.

⚠ CAUTION

Connecting the jumper cables incorrectly (wrong polarity) can immediately damage the electrical and/or EFI system.

Be certain of battery terminal polarity and jumper cable polarity when hooking up batteries.

Note: The following instructions are adapted from the SAE J1494 Rev. Dec. 2001 – Battery Booster Cables – Surface Vehicle Recommended Practice (SAE – Society of Automotive Engineers).

⚠ WARNING

Batteries contain acid and produce explosive gases.

- **Shield the eyes and face from the batteries at all times.**
- **Do Not lean over the batteries.**

Note: Be sure the vent caps are tight and level. Place a damp cloth, if available, over any vent caps on both batteries. Be sure the vehicles do not touch and that both electrical systems are off and at the same rated system voltage. These instructions are for negative ground systems only.

3. Connect the positive (+) cable to the positive (+) terminal of the discharged battery that is wired to the starter or solenoid as shown in Figure 29.

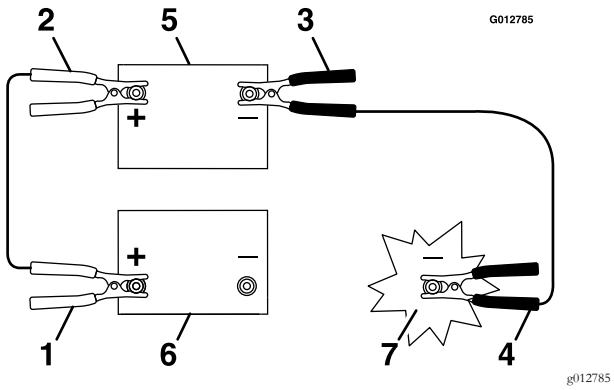

Figure 29

1. Positive (+) cable on discharged battery
2. Positive (+) cable on booster battery
3. Negative (–) cable on the booster battery
4. Negative (–) cable on the engine block
5. Booster battery
6. Discharged battery
7. Engine block

4. Connect the other end of the positive cable to the positive terminal of the booster battery.
5. Connect the black negative (–) cable to the other terminal (negative) of the booster battery.
6. MAKE THE FINAL CONNECTION ON THE ENGINE BLOCK OF THE STALLED VEHICLE (NOT TO THE NEGATIVE POST) AWAY FROM THE BATTERY. STAND BACK (see Figure 30).

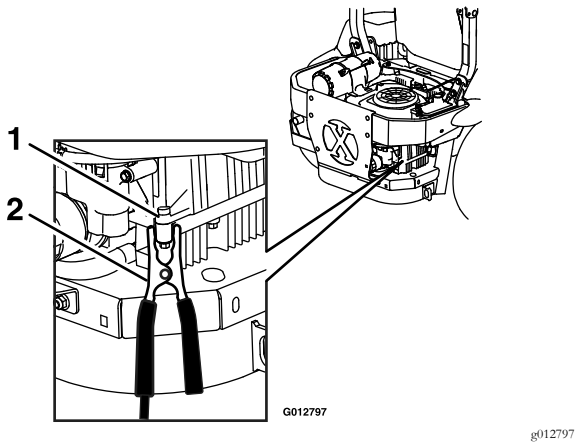

Figure 30

1. Engine block
2. Negative (–) cable

7. Start the vehicle and remove the cables in the reverse order of connection (the engine block (black) connection is the first to disconnect).

Note: A malfunctioning machine battery may cause the charging voltage to exceed 18.5 volts. The engine will turn off if there is a charge above 18.5 volts. Turn the ignition switch off, then on again to reset the engine before restarting the machine.

Check Mower Blades

Service Interval: Before each use or daily

1. Stop engine, wait for all moving parts to stop, and remove key. Engage parking brake.
2. Lift deck and secure in raised position as stated in the **Clean Grass Build-Up Under Deck** section.
3. Inspect blades and sharpen or replace as required.
4. Reinstall the blades (if they were removed) in the following order:
   A. Install bushing through blade with bushing flange on bottom (grass) side of blade.

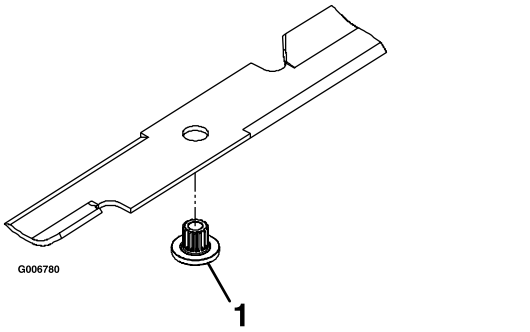

Figure 31

1. Install bushing in blade prior to installing bushing in spindle.

   B. Install bushing/blade assembly into spindle. Make sure the splines on the bushing are engaged in the spindle before tightening the bolt.

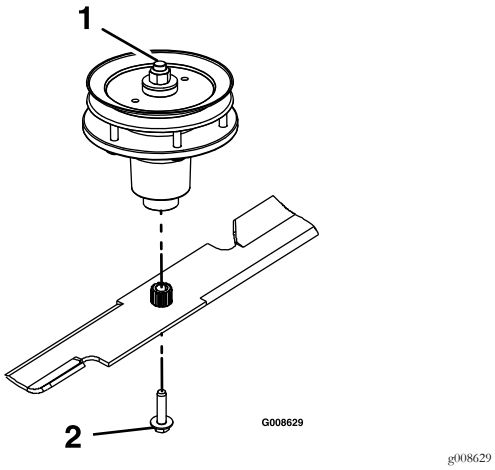

Figure 32

1. Use wrench here for blade installation. This nut has been torqued to 130-160 ft-lb minimum
2. Torque to 50-60 ft-lb (68-81 N-m) Apply lubricant to threads as needed to prevent seizing. Copper-based anti-seize preferable. Grease acceptable substitute.

C. Apply lubricant to threads of blade bolt to prevent seizing. Copper-based anti-seize preferable. Grease acceptable substitute. Install blade bolt finger tight. Place wrench on the top spindle nut then torque the blade bolts to 50-60 ft-lb (68-81 N-m).

Important: On rear discharge decks, the RH blade rotates counterclockwise. Be sure to reinstall that blade onto the RH spindle only.

⚠ WARNING

Incorrect installation of the blade or components used to retain the blade can be dangerous. Failure to use all original components and assembled as shown could allow a blade or blade component to be thrown out from under the deck resulting in serious personal injury or death.

Always install the original Exmark blades, blade bushings, and blade bolts as shown.

Check Safety Interlock System

Service Interval: Before each use or daily

Important: It is essential that operator safety mechanisms be connected and in proper operating condition prior to use.

Note: If machine does not pass any of these tests, **Do Not** operate. Contact an Authorized Service Dealer.

Note: To prevent engine cut-outs on rough terrain, the seat has a 1/2 second time delay before the engine begins to shutdown.

Check the Normal Engine Starting Chart

	System				
	Parking Brake	**PTO**	**Motion Control Levers**	**Operator**	**Outcome**
State of System	Engaged 	Disengaged (Blades) 	Both levers out (neutral lock) 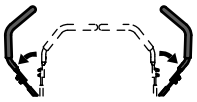	In seat or out of the seat 	Starter should crank 

Check Engine Starting Circuit Chart

Note: In the **Check Engine Starting Circuit Chart**, the state of system item that is bold is being checked in each scenario.

	System				
	Parking Brake	**PTO (Blades)**	**Motion Control Levers**	**Operator**	**Outcome**
State of System	Engaged 	Disengaged 	**Right lever moved in. Left lever moved in.** 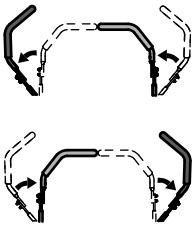	Operator in seat 	Starter must not crank 
	Disengaged 	Disengaged 	Both levers out (neutral lock) 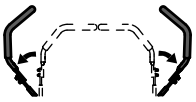	Operator in seat 	Starter must not crank 
	Engaged 	**Engaged** 	Both levers out (neutral lock) 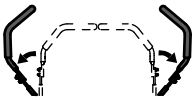	Operator in seat 	Starter must not crank 

Check Shutdown Circuit Chart

Note: The state of system item(s) that is bold is being checked in each scenario.

	System					
	Engine	**Parking Brake**	**PTO (Blades)**	**Motion Control Levers**	**Operator**	**Outcome**
State of System	Running idle (1/3 throttle) 	**Disengaged** 	Disengaged 	Both levers moved out (neutral lock) 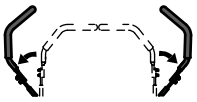	**Raise off of seat (but don't get off)** 	Engine must begin shutdown within 1 second 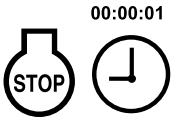
	Running idle (1/3 throttle) 	Disengaged 	**Engaged** 	Both levers moved out (neutral lock) 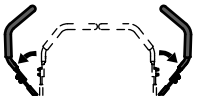	**Raise off of seat (but don't get off)** 	Engine must begin shutdown within 1 second 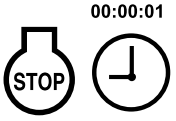
	Running idle (1/3 throttle) 	Engaged 	Disengaged 	**Right lever moved in. Left lever moved in.** 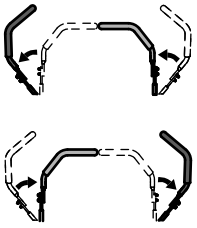	Operator in seat 	Engine must begin shutdown within 1 second 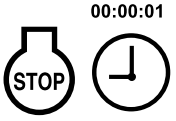
	Running idle (1/3 throttle) 	Engaged 	**Engaged** 	Both levers moved out (neutral lock) 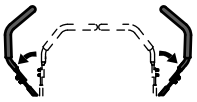	**Raise off of seat (but don't get off)** 	Engine must begin shutdown within 1 second 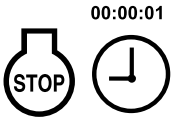

Check Rollover Protections Systems (Roll Bar) Knobs

Service Interval: Before each use or daily

Check that both the mounting hardware and the knobs are in good working condition. Make sure the knobs are fully engaged with the ROPS in the raised position. The upper hoop of the roll bar may need to be pushed forward or pulled rearward to get both knobs fully engaged.

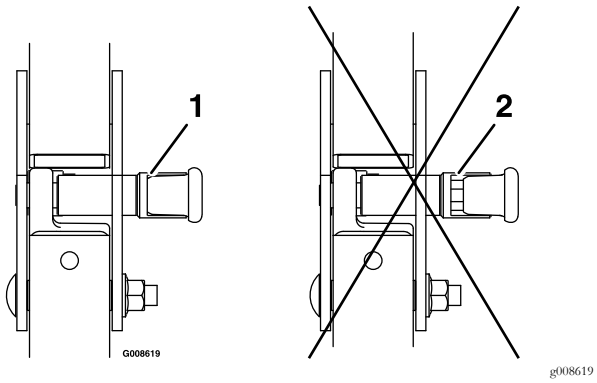

Figure 33

1. Engaged
2. Partially engaged — Do Not operate with ROPS in this condition.

Check Seat Belt

Service Interval: Before each use or daily

Visually inspect seat belt for wear, cuts, and proper operation of retractor and buckle. Replace before operating if damaged.

Check for Loose Hardware

Service Interval: Before each use or daily

1. Stop engine, wait for all moving parts to stop, and remove key. Engage parking brake.
2. Visually inspect machine for any loose hardware or any other possible problem. Tighten hardware or correct the problem before operating.

Service Air Cleaner

Service Interval: Every 100 hours—Clean or Replace (if necessary) the primary air cleaner element — check secondary air cleaner element; replace if dirty. (Kohler and Kawasaki engines) (May need more often under severe conditions. See the Engine Owner's Manual for additional information.)

Every 250 hours—Replace the primary air cleaner element — check secondary air cleaner element; replace if dirty. (Kohler and Kawasaki engines) (May need more often under severe conditions. See the Engine Owner's Manual for additional information.)

Every 500 hours—Replace the secondary air cleaner element (Kohler and Kawasaki engines) (May need more often under severe conditions. See the Engine Owner's Manual for additional information.)

1. Stop engine, wait for all moving parts to stop, and remove key. Engage parking brake.
2. See the Engine Owner's Manual for maintenance instructions.

Check Air Filter Assembly (if equipped)

Service Interval: As required

Important: To prevent engine damage, always operate the engine with both air filters and cover installed.

1. When checking or replacing the air filter element, make sure the air filter assembly is installed in the brackets.
2. Position the air cleaner cover so that the breather valve does not interfere with the throttle mechanism.

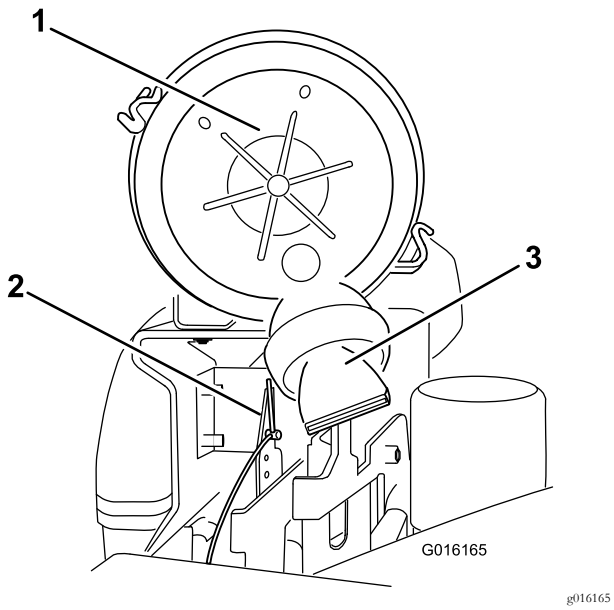

Figure 34

1. Air cleaner cover
2. Throttle mechanism
3. Breather valve

3. Secure the cover with latches.

Change Engine Oil

Service Interval: After the first 5 hours

Every 100 hours/Yearly (whichever comes first) (May need more often under severe conditions.)

1. Stop engine, wait for all moving parts to stop, and remove key. Engage parking brake.
2. Drain oil while engine is warm from operation.
3. Remove dip stick. The oil drain hose is located on right hand side of engine at the rear. Place pan under machine to catch oil. Remove plug from end of drain hose. Allow oil to drain.
4. Replace the oil filter every other oil change. Clean around oil filter and unscrew filter to remove. Before reinstalling new filter, apply a thin coating of Exmark 4–Cycle Premium Engine oil on the surface of the rubber seal. Turn filter clockwise until rubber seal contacts the filter adapter then tighten filter an additional 1/2 to 3/4 turn.
5. Clean around oil fill cover and remove cap. Fill to specified capacity and replace cap.
6. Use oil recommended in the **Check Engine Oil Level** section. **Do Not** overfill. Start the engine and check for leaks.
7. Wipe up any spilled oil from engine deck mounting surfaces.

Check Hydraulic Oil Level

Service Interval: Every 50 hours

1. Stop engine and wait for all moving parts to stop. Engage parking brake.
2. Wait until the machine cools before checking the hydraulic oil.
3. Adjust the seat to the most forward position to access the caps on the LH and RH hydro drives.
4. Clean the area around hydraulic reservoir cap and remove cap.
5. Wipe the dipstick clean and re-insert the cap back into the hydro. Lightly tighten the cap.
6. Remove the cap again and check the level of the oil on the dipstick. See Figure 35 for oil levels.

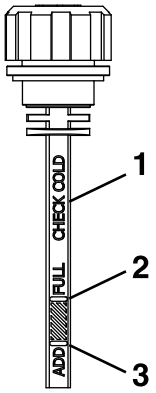

Figure 35

1. Check cold
2. Full
3. Add

Note: The oil level on the dipstick will be incorrect if the oil is checked when the unit is hot.

7. If the dipstick oil level is at the “add” mark add Exmark Premium Hydro Oil.
8. Replace hydraulic reservoir cap and tighten until snug. **Do Not overtighten.**

Check Tire Pressures

Service Interval: Every 50 hours

1. Stop engine, wait for all moving parts to stop, and remove key. Engage parking brake.
2. Check tire pressure in drive tires and pneumatic casters.
3. Inflate pneumatic casters to 13 psi (90 kPa).

   Inflate drive tires: 13 psi (90 kPa)
4. Semi-pneumatic caster tires Do Not need to be inflated.

Note: Do Not add any type of tire liner or foam fill material to the tires. Excessive loads created by foam filled tires may cause failures to the hydro drive system, frame, and other components. Foam filling tires will void the warranty.

Check Condition Of Belts

Service Interval: Every 50 hours

1. Stop engine, wait for all moving parts to stop, and remove key. Engage parking brake.
2. Remove left and right belt shields on deck and lift up floor pan to inspect deck drive belt.
3. Check under machine to inspect the pump drive belt.

   Note: No adjustments are required for belt tension.

Lubricate Grease Fittings

Note: See chart for service intervals.

1. Stop engine, wait for all moving parts to stop, and remove key. Engage parking brake.
2. Lubricate fittings with one to two pumps of NLGI grade #2 multi-purpose gun grease.

   Refer to the following chart for fitting locations and lubrication schedule.

Lubrication Chart			
Fitting Locations	**Initial Pumps**	**Number of Places**	**Service Interval**
1. Deck and Pump Idler Pivots	1	2	Yearly
2. Front Caster Pivots	*0	2	*Yearly

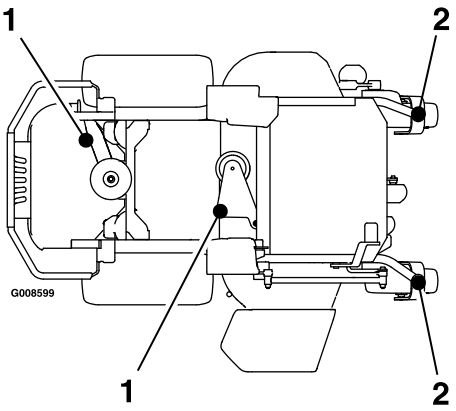

* See step 3 for special lubrication instructions on the caster pivots.

3. Lubricate caster pivots once a year. Remove hex plug and cap. Thread grease zerk in hole and pump with grease until it oozes out around top bearing. Remove grease zerk and thread plug back in. Place cap back on.

Lubricate Caster Wheel Hubs

Service Interval: As required

1. Stop engine, wait for all moving parts to stop, and remove key. Engage parking brake.

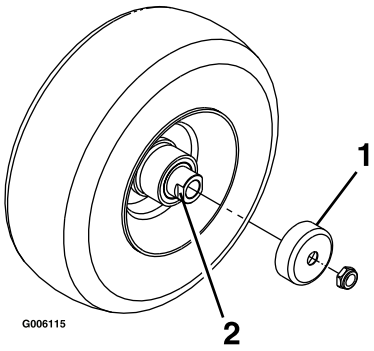

Figure 36

1. Seal guard
2. Spacer nut with wrench flats

2. Remove caster wheel from caster forks.
3. Remove seal guards from the wheel hub.
4. Remove one of the spacer nuts from the axle assembly in the caster wheel. Note that thread locking adhesive has been applied to lock the spacer nuts to the axle. Remove the axle (with the other spacer nut still assembled to it) from the wheel assembly.

5. Pry out seals, and inspect bearings for wear or damage and replace if necessary.
6. Pack the bearings with a NLGI grade #1 multi-purpose grease.
7. Insert one bearing, one new seal into the wheel.

   Note: Seals (Exmark P/N 103-0063) must be replaced.
8. If the axle assembly has had both spacer nuts removed (or broken loose), apply a thread locking adhesive to one spacer nut and thread onto the axle with the wrench flats facing outward. Do Not thread spacer nut all of the way onto the end of the axle. Leave approximately 1/8 inch (3 mm) from the outer surface of the spacer nut to the end of the axle inside the nut.
9. Insert the assembled nut and axle into the wheel on the side of the wheel with the new seal and bearing.
10. With the open end of the wheel facing up, fill the area inside the wheel around the axle full of NLGI grade #1 multi-purpose grease.
11. Insert the second bearing and new seal into the wheel.
12. Apply a thread locking adhesive to the 2nd spacer nut and thread onto the axle with the wrench flats facing outward.
13. Torque the nut to 75-80 in-lb (8-9 N-m), loosen, then re-torque to 20-25 in-lb (2-3 N-m). Make sure axle does not extend beyond either nut.
14. Reinstall the seal guards over the wheel hub and insert wheel into caster fork. Reinstall caster bolt and tighten nut fully.

Important: To prevent seal and bearing damage, check the bearing adjustment often. Spin the caster tire. The tire should not spin freely (more than 1 or 2 revolutions) or have any side play. If the wheel spins freely, adjust torque on spacer nut until there is a slight amount of drag. Reapply thread locking adhesive.

Lubricate Deck Lift Pivot

Service Interval: Every 100 hours

1. Stop engine, wait for all moving parts to stop, and remove key. Engage parking brake.
2. Lubricate deck lift pivot with a spray type lubricant or light oil.

Check Spark Plugs

Service Interval: Every 200 hours

Remove spark plugs, check condition and reset gaps, or replace with new plugs. See Engine Owner's Manual.

Change Fuel Filter

Service Interval: As required

A fuel filter is installed between the fuel tank and the engine. Replace when necessary.

Note: It is important to reinstall the fuel line hoses and secure with plastic ties the same as they were originally installed at the factory to keep the fuel line away from components that could cause fuel line damage.

Change Hydraulic System Filter and Fluid

Service Interval: After the first 250 hours

Every 500 hours thereafter (Every 250 hours if using Mobil 1 15W50 thereafter)

Note: Only use Exmark Hydro Filter–Part No. 116-0164 for summer or winter.

1. Stop engine, wait for all moving parts to stop, and remove key. Engage parking brake.
2. Raise the rear of machine up and support with jack stands (or equivalent support) just high enough to allow drive wheels to turn freely.
3. Remove the pump drive belt.
4. Place a catch pan under the hydro.
5. Carefully clean area around the filters. It is important that no dirt or contamination enter the hydraulic system.
6. Using a socket, unscrew filters to remove and allow oil to drain.
7. Before installing the new filters, apply a thin coat of Exmark Premium Hydro Oil on the surface of the two rubber seals.
8. Install the new filters and torque to 14 ft-lb (19 N-m).

9. Fill the hydraulic system as stated in **Check Hydraulic Oil Level** section.

   Exmark Premium Hydro Oil is recommended. Refer to the chart for an acceptable alternative:

Hydro Oil	Service Interval
Exmark Premium Hydro Oil (Preferred)	After first 250 hours *Every 500 hours thereafter
Mobil 1 15W50	After first 250 hours *Every 250 hours thereafter

   *May need more often under severe conditions.

10. Remove the catch pan and properly dispose of hydro oil and filter according to local codes.
11. Re-install the pump drive belt.
12. Start engine and move throttle control ahead to full throttle position. Move the speed control levers to the full speed and run for one minute. Shut down the machine, allow the hydros to cool and recheck oil level.
13. Remove the jack stands.

Note: Do Not change the hydraulic system oil (except for what can be drained when changing filter), unless it is felt the oil has been contaminated or been extremely hot.

Changing oil unnecessarily could damage hydraulic system by introducing contaminants into the system.

Wheel Hub–Slotted Nut Torque Specification

Service Interval: After the first 100 hours

Every 500 hours thereafter

Torque the slotted nut to 211-260 ft-lb (286-352 N-m).

Note: Do Not use anti-seize on wheel hub.

Check Spark Arrester (if equipped)

Service Interval: Every 50 hours

⚠ WARNING

Hot exhaust system components may ignite gasoline vapors even after the engine is stopped. Hot particles exhausted during engine operation may ignite flammable materials. Fire may result in personal injury or property damage.

Do Not refuel or run engine unless spark arrester is installed.

1. Stop engine, wait for all moving parts to stop, and remove key. Engage parking brake.
2. Wait for muffler to cool.
3. If any breaks in the screen or welds are observed, replace arrester.
4. If plugging of the screen is observed, remove arrester and shake loose particles out of the arrester and clean screen with a wire brush (soak in solvent if necessary). Reinstall arrester on exhaust outlet.

Thread Locking Adhesives

Thread locking adhesives such as "Loctite 242" or "Fel-Pro, Pro-Lock Nut Type" are used on the following fasteners:

- ROPS spring pin housing.
- Hydro pump control arm, linkage bolt, and attachment bolt.
- Hydro cooling fan screw.
- Hydro park brake anchor mounting bolt
- Sheave and clutch retaining bolt in the end of engine crankshaft.

Thread locking adhesives are required for some hardware on engines — see the Engine manual.

General Purpose Grease (Or Food-Grade Anti-seize)

General purpose grease (or food-grade anti-seize) is used in the following location:

Between the cutter housing spindles and bearings.

Copper-Based Anti-seize

Copper-based anti-seize is used in the following location:

On threads of Blade Bolts. See **Check Mower Blades** section.

Dielectric Grease

Dielectric grease is used on all blade type electrical connections to prevent corrosion and loss of contact. Dielectric grease should not be applied to sealed connectors.

Adjustments

Note: Disengage PTO, shut off engine, wait for all moving parts to stop, engage parking brake, and remove key before servicing, cleaning, or making any adjustments to the machine.

Deck Leveling

1. Position the mower on a flat surface.
2. Stop engine, wait for all moving parts to stop, and remove key. Engage parking brake.
3. Check the tire pressure in drive tires and pneumatic front caster tires (if equipped). Proper inflation pressure for tires is 13 psi (90 kPa). Adjust if necessary.
4. Position the transport lock in the latching position.
5. Push the foot pedal all the way forward and the deck will latch at the 5 1/2 inch (14 cm) transport position (Figure 37).

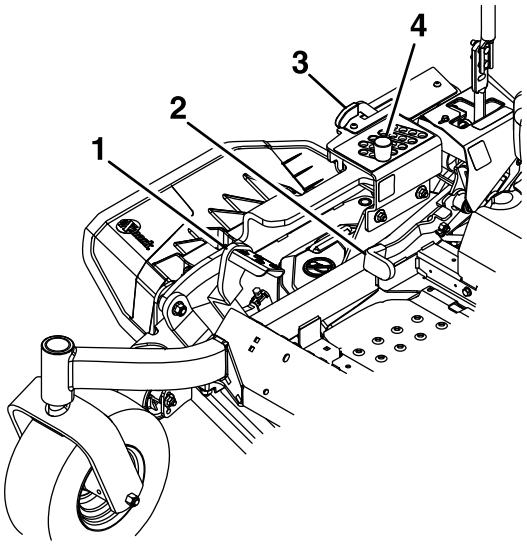

g504752

Figure 37

1. Foot pedal
2. Park brake
3. Transport lock
4. Height of cut pin

6. Insert the height adjustment pin into the 3 inch (7.6 cm) cutting height location.
7. Release the transport lock and allow the deck to lower to the cutting height.
8. Raise the discharge deflector (side discharge units only).
9. Measure from the level surface to the front tip of the center blade. The measurement should read 3 inches (7.6 cm).

Note: In most conditions, the back tips on the side blades should be adjusted:

Side Discharge: 1/4 inch (6.4 mm) higher than the front.

Rear Discharge: to be level with the front.

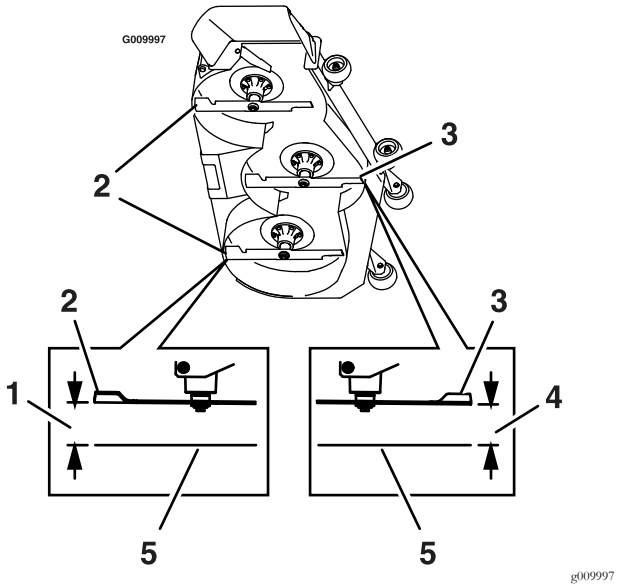

g009997

Figure 38

1. Side Discharge: 3 1/4 inches (8.3 cm)
   Rear Discharge: 3 inches (7.6 cm)
2. Back blade tip
3. Front blade tip
4. 3 inches (7.6 cm)
5. Level surface

10. Adjust the height — to increase, turn the adjuster screw clockwise; to decrease, turn counterclockwise.

    Fine tune the front deck lift assembly by turning the adjuster screw until it reaches the 3 inch (7.6 cm) height (see Figure 39).

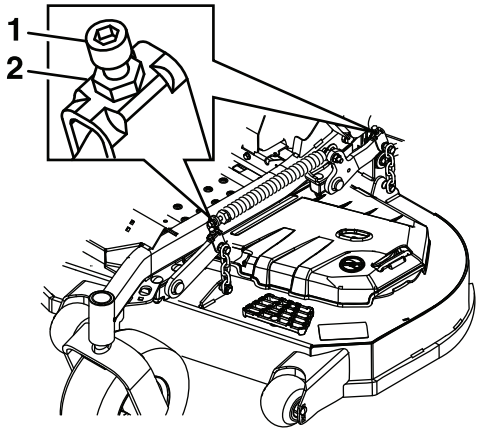

g505384

Figure 39

1. Adjuster screw
2. Jam nut

11. Measure the back tip height. Fine tune rear adjusters as required; the single point adjustment can be utilized to gain more adjustment.
    - Side Discharge Decks: The back tips of the side blades should measure 3 1/4 inches (8.3 cm).
    - Rear Discharge Decks: The back tips of the side blades should measure 3 inches (7.6 cm).
12. Re-measure until all four sides are the correct height. Tighten all the nuts on the deck lift arm assemblies.
13. Lower discharge deflector (side discharge only).
14. If the four deck adjusters do not have enough adjustment to achieve accurate cut height with the desired rake, the height of cut box can be utilized. Loosen the bolts, shown in Figure 40, slide the box fore or aft, and retighten the bolts.

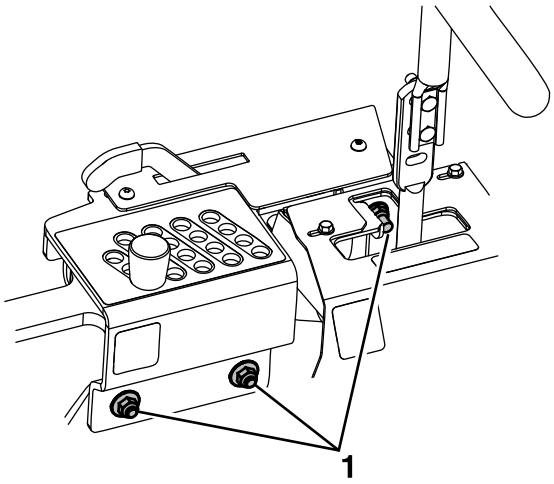

g505438

Figure 40

1. Height of cut box mounting bolt

15. To adjust the single point system, first loosen the front and rear height-of-cut plate mounting bolts.

    Note: On rear discharge decks, the mower deck is attached in the front holes at the factory (see Figure 41). If needed, use the back holes for further adjustment when leveling the mower deck.

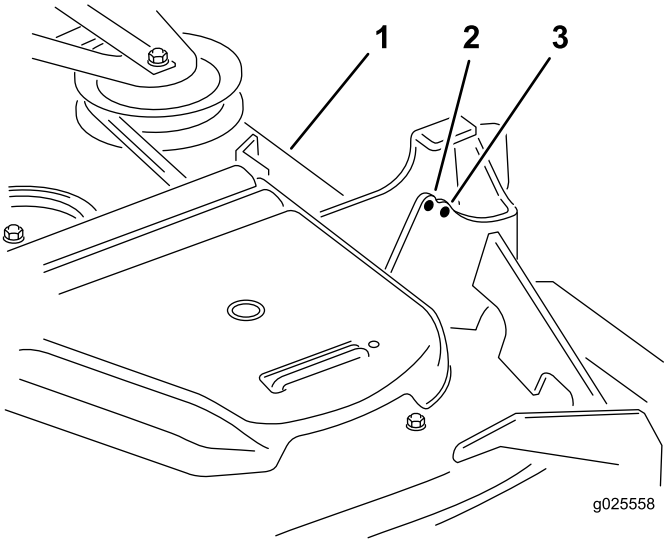

g025558

Figure 41

1. Mower deck
2. Front hole
3. Back hole

16. If the deck is too low, tighten the single point adjustment bolt by rotating it clockwise. If the deck is too high, loosen the single point adjustment bolt by rotating it counterclockwise.

Note: Loosen or tighten the single point adjustment bolt enough to move the height-of-cut plate mounting bolts at least 1/3 the length of the available travel in their slots. This will regain some up and down adjustment on each of the four deck links.

17. Re-tighten front and rear height-of-cut plate mounting bolts.

Important: Torque the front and rear height-of-cut plate mounting bolts to 27-33 ft-lb (37-45 N-m).

18. Repeat steps 9 through 13.

Pump Drive Belt Tension

Self-tensioning - No adjustment necessary.

Deck Belt Tension

Self-tensioning - No adjustment necessary.

Adjusting the Parking Brake

Service Interval: After the first 100 hours
Every 500 hours thereafter

Check to make sure brake is adjusted properly. This procedure must be followed after the first 100 hours or when a brake component has been removed or replaced.

1. Drive the machine onto a level surface.
2. Disengage the blade control switch (PTO), move the motion control levers to the neutral locked position and engage the parking brake (lever is in the "up" position).
3. Stop the engine, wait for all moving parts to stop, and remove the key.
4. Raise the back of the machine up and support the machine with jack stands.
5. Remove the rear tires from the machine.
6. Remove any debris from the brake area.
7. Rotate the drive wheel release handle to the "released" position. Refer to the **Drive Wheel Release Valves** section in Operation.
8. Disengage the park brake.
9. Remove the spring clevis pin from the rear linkage and caliper.

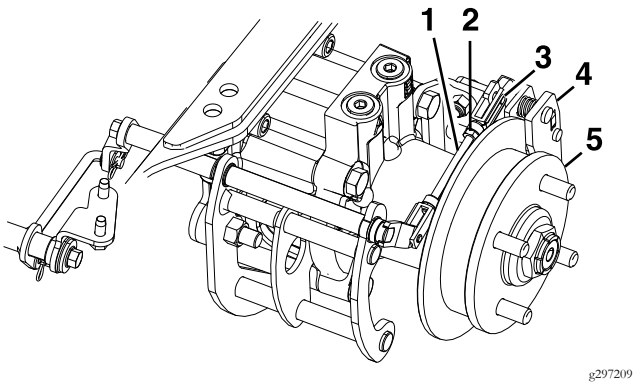

Figure 42

1. Rear linkage
2. Jam nut
3. Spring clevis pin
4. Caliper
5. Wheel hub

10. Loosen the jam nut on the rear linkage.
11. Push the caliper lever forward with finger pressure until the brake pad contacts the hub rotor.
12. Adjust the rear linkage until the spring clevis pin can be inserted in the hole in the caliper lever.

Note: To lengthen the linkage, rotate the clevis one turn outward.

13. Tighten the jam nut on the rear linkage.
14. Wheel hub should move freely between the caliper.
15. Repeat steps 9 through 14 for the brake on the right side.
16. Rotate the drive wheel release handle to the "operating" position. Refer to the **Drive Wheel Release Valves** section in Operation.
17. Install the rear tires and torque lug nuts to 95 ft-lb (129 N-m).
18. Remove jack stands.

Electric Clutch Adjustment

No adjustment necessary. However, when the clutch brake has worn to the point where the clutch no longer engages consistently, the shim can be removed to extend the clutch life (not applicable for Lazer Z E-Series with 48 inch decks).

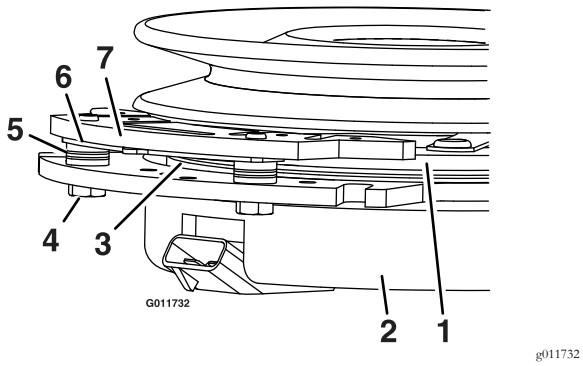

Figure 43

1. Armature
2. Field shell
3. Rotor
4. Brake mounting bolt
5. Brake spacer
6. Re-gap shim
7. Brake pole

Removing the Shim:

1. Stop engine, wait for all moving parts to stop, and remove key. Engage parking brake. Allow the machine to cool completely before starting these instructions.
2. Using a pneumatic line, blow out any debris from under the brake pole and around the brake spacers.
3. Check the condition of the wire harness leads, connectors, and terminals. Clean or repair as necessary.
4. Verify that 12V is present at the clutch connector when the PTO switch is engaged.
5. Measure the gap between the rotor and armature. If the gap is greater than .04 inch (1 mm), proceed with the following steps:

   A. Loosen both brake mounting bolts one-half to one full turn (see Figure 44).

   Note: Do Not remove the brake pole from the field shell/armature. The brake pole has worn to match the armature and needs to continue to match after the shim is removed to ensure proper brake torque.

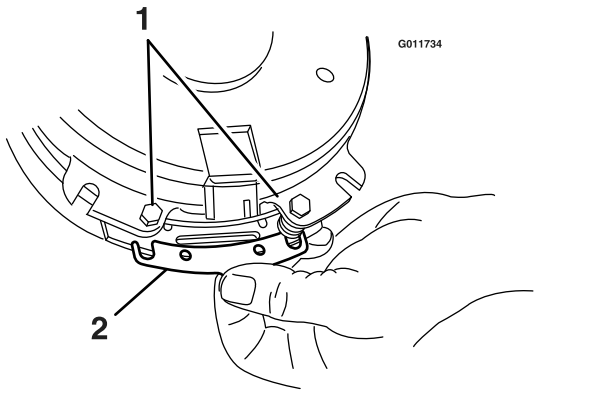

Figure 44

1. Brake mounting bolt
2. Shim

   B. Using needle nose pliers, or by hand, take hold of the tab and remove the shim (Do Not discard the shim until proper clutch function has been confirmed).

   C. Using a pneumatic line, blow out any debris from under the brake pole and around the brake spacers.

   D. Re-torque each bolt (M6 x 1) to 10 ft-lb (13 N-m) +/-0.5 ft-lb (0.7 N-m).

   E. Using a 0.010 inch thick feeler gauge, verify that a gap is present between the rotor and armature face on both sides of the brake pole as shown. (Due to the way the rotor and armature faces wear (peaks and valleys) it is sometimes difficult to measure the true gap.)

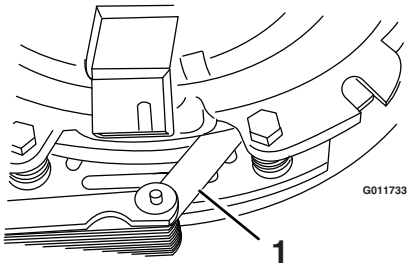

Figure 45

1. Feeler gauge

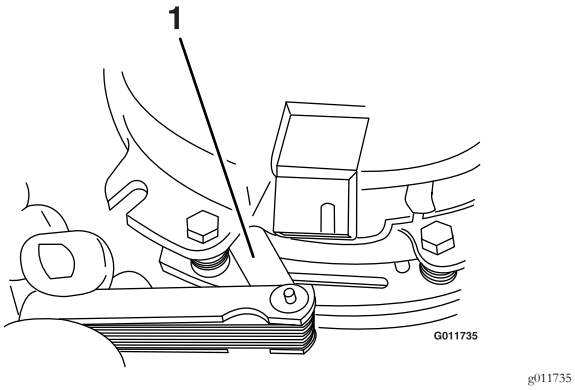

Figure 46

1. Feeler gauge

- If the gap is less than 0.010 inch, then reinstall the shim and reference the **Troubleshooting** section.
- If the gap is sufficient, proceed to the safety check in step F.

F. Perform the following safety check:

a. Sit on the seat and start the engine.

b. Make sure the blades Do Not engage with the PTO switch "off" and the clutch disengaged.

If the clutch does not disengage, reinstall the shim and reference the **Troubleshooting** section.

c. Engage and disengage the PTO switch ten consecutive times to ensure the clutch is functioning properly. If the clutch does not engage properly, reference the **Troubleshooting** section.

Motion Control Linkage Adjustment

Located on either side of the fuel tank, below the seat are the pump control linkages. Rotating the pump linkage with a 1/2 inch wrench allows fine tuning adjustments so that the machine does not move in neutral. Any adjustments should be made for neutral positioning only.

1. Prior to starting the engine, push the deck lift pedal and remove the height of cut pin. Lower deck to the ground.
2. Raise the rear of machine up and support with jack stands (or equivalent support) just high enough to allow drive wheels to turn freely.
3. Remove the electrical connection from the seat safety switch, located under the bottom cushion of the seat. The switch is a part of the seat assembly.
4. **Temporarily** install a jumper wire across the terminals in the connector of the main wiring harness.
5. Start engine. **Brake must be engaged and motion control levers out to start engine. Operator does not have to be in the seat because of the jumper wire being used.** Run engine at full throttle and release brake.
6. Run the unit at least 5 minutes with the drive levers at full forward speed to bring hydraulic oil up to operating temperature.

Note: The motion control lever needs to be in neutral while making any necessary adjustments.

7. Bring the motion control levers into the neutral position. Adjust pump control rod lengths by rotating the double nuts on the rod in the appropriate direction until the wheels slightly creep in reverse (Figure 47). Move the motion control levers to the reverse position and while applying slight pressure to the lever allow the reverse indicator springs to bring the levers back to neutral. The wheels must stop turning or slightly creep in reverse.

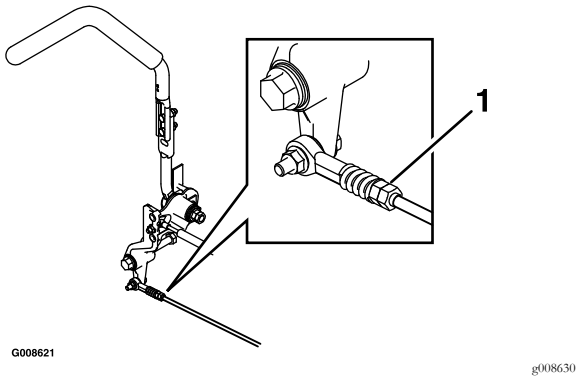

Figure 47

1. Double nuts

8. Shut off unit. Remove jumper wire from wire harness and plug connector into seat switch.
9. Remove the jack stands.
10. Raise the deck and re-install the height of cut pin.
11. Check that the machine does not creep in neutral with the park brakes disengaged.

Motion Control Damper Adjustment

The top damper mounting bolt can be adjusted to obtain a more desired motion control lever resistance. See Figure 48 for mounting options.

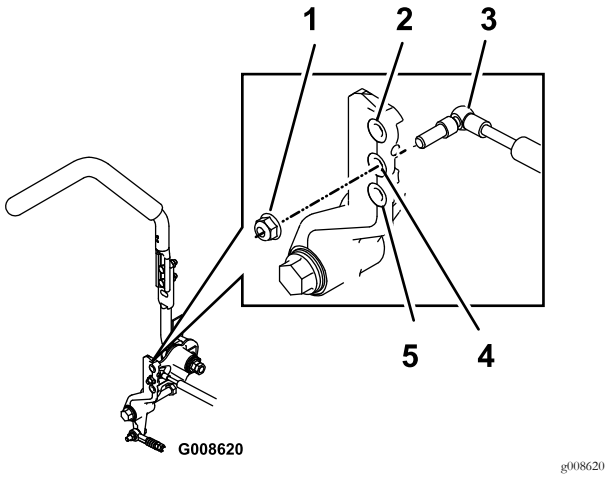

Figure 48

RH Motion Control Shown

1. Torque nyloc nut to 200 in-lb (16.7 ft-lb). Bolt must protrude past end of nyloc nut after torque. A T-40 Torx bit will be necessary to hold the stud from turning.
2. Most resistance (firmest feel)
3. Damper
4. Medium resistance (medium feel)
5. Least resistance (softest feel)

Motion Control Neutral Lock Pivot Adjustment

The flanged nut can be adjusted to obtain a more desired motion control lever resistance (Figure 49).

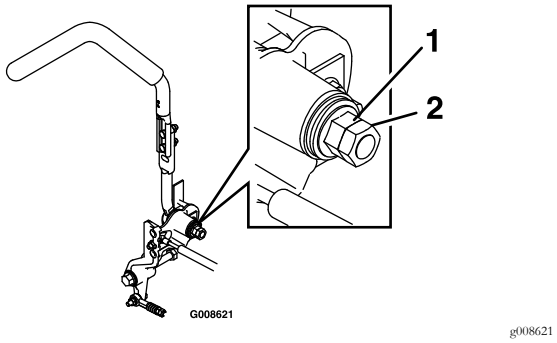

Figure 49

1. Flanged nut
2. Jam nut

1. Loosen the jam nut.
2. Tighten or loosen the flanged nut to the desired feel.

   For more resistance, tighten the flanged nut.

   For less resistance, loosen the flanged nut
3. Tighten jam nut.

Motion Control Handle Adjustment

Adjusting the height:

The motion control levers can be adjusted higher or lower for maximum operator comfort.

1. Remove the two bolts holding the control lever to the control arm shaft (Figure 50).

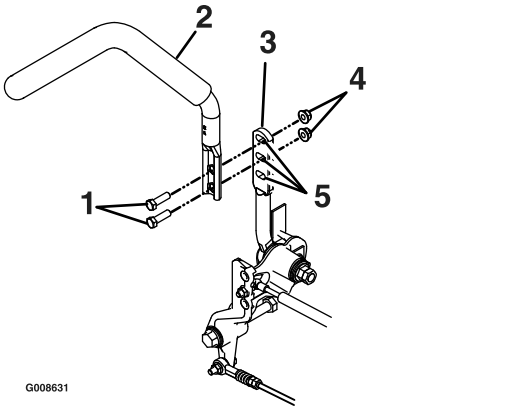

Figure 50

1. Bolts
2. Control lever
3. Control arm shaft
4. Nuts
5. Slotted holes

2. Move the control lever to the next set of holes. Secure the lever with the two bolts.
3. Repeat the adjustment for the opposite control lever.

Adjusting the Tilt

The motion control levers can be tilted fore or aft for maximum operator comfort.

1. Loosen the upper bolt holding the control lever to the control arm shaft.
2. Loosen the lower bolt just enough to pivot the control lever fore or aft Figure 50. Tighten both bolts to secure the control in the new position.
3. Repeat the adjustment for the opposite control lever.

Motion Control Full Forward Tracking Adjustment

If the machine travels or pulls to one side when the motion control levers are in the full forward position, adjust the cover plates.

1. Loosen the screws on a cover plate (see Figure 51).
2. Slide the cover plate backward or forward to adjust the travel of the lever and tighten the screws.
3. Drive the machine and check the full forward tracking.
4. Repeat steps 1 through 3 until desired tracking is obtained.

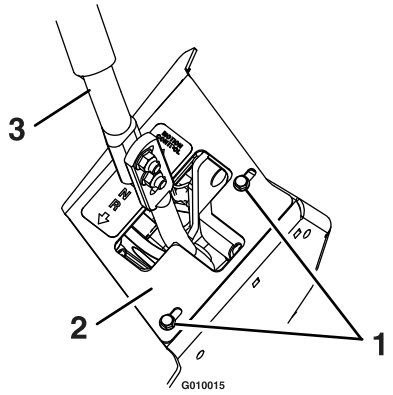

Figure 51
RH Motion Control Shown

1. Screw
2. Cover plate
3. Motion control lever

Caster Pivot Bearings Pre-Load Adjustment

Remove dust cap from caster and tighten nyloc nut until washers are flat and back off 1/4 of a turn to properly set the pre-load on the bearings. If disassembled, make sure the spring disc washers are reinstalled as shown in Figure 52.

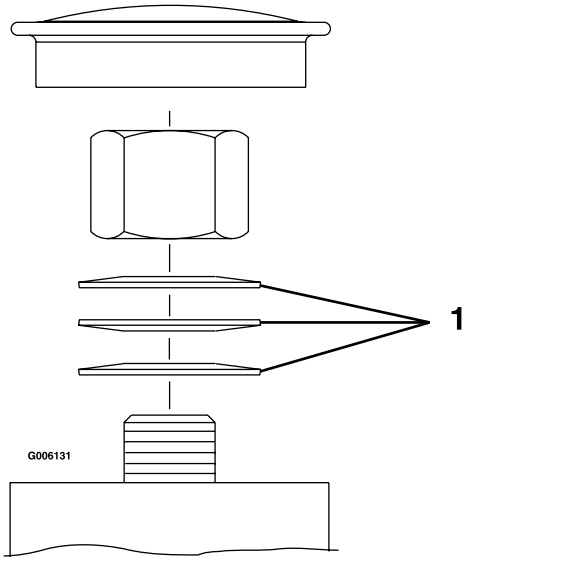

Figure 52

1. Spring disc washers

Cleaning

Cleaning and Storing Safety

- Park machine on level ground, disengage drives, set parking brake, stop engine, and remove key. Wait for all moving parts to stop before leaving the operator's position. Allow the machine to cool before servicing, adjusting, fueling, cleaning, or storing.
- Clean grass and debris from the cutting unit, muffler, drives, grass catcher, and engine compartment to prevent fires.
- Allow the machine to cool before storing the machine in any enclosure. Do Not store the machine or fuel container, or refuel, where there is an open flame, spark, or pilot light such as on a water heater or other appliance.

Clean Debris From Machine

Service Interval: Before each use or daily

1. Stop engine, wait for all moving parts to stop, and remove key. Engage parking brake.
2. Clean off any oil, debris, or grass build-up on the machine and cutting deck, especially under deck belt shields, around the fuel tank, around engine and exhaust area.

   Important: You can wash the machine with mild detergent and water. Do not pressure wash the machine. Avoid excessive use of water, especially near the control panel, under the seat, around the engine, hydraulic pumps, and motors.

Clean Engine and Exhaust System Area

Service Interval: Before each use or daily (May be required more often in dry or dirty conditions.)

⚠ CAUTION

Excessive debris around engine cooling air intake and exhaust system area can cause engine, exhaust area, and hydraulic system to overheat which can create a fire hazard.

Clean all debris from engine and exhaust system area.

1. Stop engine, wait for all moving parts to stop, and remove key. Engage parking brake.
2. Clean all debris from rotating engine air intake screen, around engine shrouding, and exhaust system area.
3. Wipe up any excessive grease or oil around the engine and exhaust system area.

Remove Engine Shrouds and Clean Cooling Fins

Service Interval: Every 100 hours

1. Stop engine, wait for all moving parts to stop, and remove key. Engage parking brake.
2. Remove cooling shrouds from engine and clean cooling fins. Also clean dust, dirt and oil from external surfaces of engine which can cause inadequate cooling.
3. Make sure cooling shrouds are reinstalled. Operating the engine without cooling shrouds will cause engine damage due to overheating.

Clean Hydro Fan Cooling Guards, Hydro Cooling Fins, and Fan

Service Interval: Before each use or daily

Removing debris from the hydro fan cooling guards, hydro cooling fins, and fan will allow the hydro system to run cooler and improve the life of the hydro system.

1. Stop engine, wait for all moving parts to stop, and remove key. Engage parking brake.
2. Slide seat all the way forward to access the LH and RH hydro drive area.
3. Remove accumulated debris from the hydro fan cooling guards, hydro cooling fins, and fan.

Clean Grass Build-Up Under Deck

Service Interval: Before each use or daily

1. Stop engine, wait for all moving parts to stop, and remove key. Engage parking brake.
2. Raise deck to the transport (5 1/2 inch (14 cm) cutting height) position. Lift the front of unit and support unit using jack stands or equivalent support.
3. Clean out any grass build-up from underside of deck and in discharge deflector.

Cleaning the Suspension System

Note: Do not clean the shock assemblies with pressurized water.

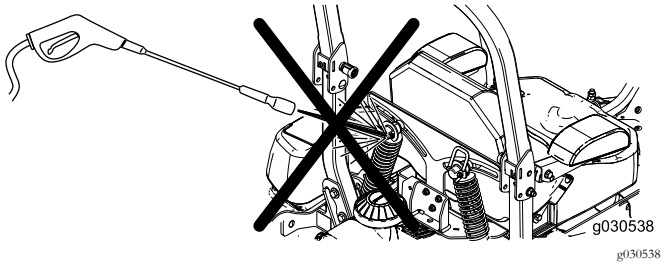

g030538

Figure 53

Waste Disposal

Motor Oil Disposal

Engine oil and hydraulic oil are both pollutants to the environment. Dispose of used oil at a certified recycling center or according to your state and local regulations.

Battery Disposal

⚠ DANGER

Battery electrolyte contains sulfuric acid, which is poisonous and can cause severe burns. Swallowing electrolyte can be fatal or if it touches skin can cause severe burns.

- **Wear safety glasses to shield eyes, and rubber gloves to protect skin and clothing when handling electrolyte.**
- **Do Not swallow electrolyte.**
- **In the event of an accident, flush with water and call a doctor immediately.**

Federal law states that batteries should not be placed in the garbage. Management and disposal practices must be within relevant federal, state, or local laws.

If a battery is being replaced or if the unit containing the battery is no longer operating and is being scrapped, take the battery to a local certified recycling center. If no local recycling is available return the battery to any certified battery reseller.

Troubleshooting

Important: It is essential that all operator safety mechanisms be connected and in proper operating condition prior to mower use.

When a problem occurs, do not overlook the simple causes. For example: starting problems could be caused by an empty fuel tank.

The following table lists some of the common causes of trouble. Do not attempt to service or replace major items or any items that call for special timing of adjustment procedures (such as valves, governor, etc.). Have this work done by your **Engine Service Dealer**.

Note: When disconnecting electrical connectors DO NOT pull on the wires to separate the connectors.

Problem	Possible Cause	Corrective Action
Starter does not crank	1. PTO is engaged.	1. Disengage the PTO.
	2. Parking brake is not engaged.	2. Set the parking brake.
	3. Drive levers are not in neutral lock position.	3. Ensure the drive levers are in the neutral lock position.
	4. Battery does not have a full charge.	4. Charge the battery. See **Check Battery Charge** and **Recommended Jump Starting Procedure** sections in Maintenance.
	5. Electrical connections are corroded, loose or faulty.	5. Check the electrical connections for good contact. Clean connector terminals thoroughly with electrical contact cleaner, apply dielectric grease and reconnect.
	6. Fuse is blown.	6. Replace the blown fuse.
	7. Relay or switch is defective.	7. Contact an Authorized Service Dealer.
	8. Faulty module.	8. Replace module.
	9. Faulty battery shutdown during boost.	9. Cycle key switch off, then on. If cycling does not resolve issue, replace battery.
Engine will not start, starts hard, or fails to keep running	1. Fuel tank is empty.	1. Fill the fuel tank.
	2. Fuel shutoff valve is closed.	2. Open the fuel shutoff valve.
	3. Oil level in the crankcase is low.	3. Add oil to the crankcase.
	4. The throttle and choke are not in the correct position.	4. Be sure the throttle control is midway between the "SLOW" and "FAST" positions, and the choke is in the "ON" position for a cold engine or the "OFF" position for a warm engine.
	5. Dirt in fuel filter.	5. Replace the fuel filter.
	6. Dirt, water, or stale fuel is in the fuel system.	6. Contact an Authorized Service Dealer.
	7. Air cleaner is dirty.	7. Clean or replace the air cleaner element.
	8. Seat switch is not functioning properly.	8. Check the seat switch indicator. Replace seat if needed.
	9. Electrical connections are corroded, loose or faulty.	9. Check the electrical connections for good contact. Clean connector terminals thoroughly with electrical contact cleaner, apply dielectric grease and reconnect.
	10. Relay or switch is defective.	10. Contact an Authorized Service Dealer.
	11. Faulty spark plug.	11. Clean, adjust or replace spark plug.
	12. Spark plug wire is not connected.	12. Check the spark plug wire connection.
	13. Faulty module.	13. Replace module.
	14. MIL illuminates and blinks	14. Contact an Authorized Service Dealer

Troubleshooting

Problem	Possible Cause	Corrective Action
Oil temperature light is on and engine RPM is low	1. Engine Control Unit has limited engine RPMs, known as "limp" mode.	1. Check oil level. If level is above "add", contact an Authorized Service Dealer. Remove debris from hood and oil cooler. Verify fan is operating.
Oil pressure light is on and engine RPM is low	1. Engine Control Unit has limited engine RPMs, known as "limp" mode.	1. Let engine cool and check oil level. If level is above "add", contact an Authorized Service Dealer.
Engine loses power	1. Engine load is excessive 2. Air cleaner is dirty. 3. Oil level in the crankcase is low. 4. Cooling fins and air passages for the engine are plugged. 5. Dirt in fuel filter. 6. Dirt, water, or stale fuel is in the fuel system. 7. Low oil pressure 8. High oil temperature	1. Reduce the ground speed. 2. Clean or replace the air cleaner element. 3. Add oil to the crankcase. 4. Remove the obstructions from the cooling fins and air passages, hood, screen, and oil cooler. 5. Replace the fuel filter. 6. Contact an Authorized Service Dealer. 7. Check oil level. If level is above "add", contact an Authorized Service Dealer. 8. Let engine cool and check oil level. If level is above "add", contact an Authorized Service Dealer.
Mower pulls left or right (with levers fully forward)	1. Tire pressure in drive tires not correct.	1. Adjust tire pressure in the drive tires.
Machine does not drive	1. Drive release handle not in "operating" position. 2. Drive or pump belt is worn, loose or broken. 3. Drive or pump belt is off a pulley. 4. Broken or missing idler spring. 5. Hydraulic fluid level is low or too hot.	1. Position handle in "operating" position; see **Drive Wheel Release Valves** section in Operation. 2. Change the belt. 3. Change the belt. 4. Replace the spring. 5. Add hydraulic fluid to reservoir or let it cool down.
Uneven cutting height.	1. Blade(s) not sharp. 2. Cutting blade(s) is/are bent. 3. Mower deck is not level. 4. Underside of mower is dirty. 5. Tire pressure in drive tires not correct. 6. Blade spindle bent. 7. Tips of adjacent blades are at an uneven cutting height. Blades tips should be even within 3/16 inch which is approximately one blade thickness.	1. Sharpen the blade(s). 2. Install new cutting blade(s). 3. Level mower deck from side-to-side and front-to-rear. 4. Clean the underside of the mower. 5. Adjust tire pressure in the drive tires. 6. Contact an Authorized Service Dealer. 7. Replace blades, spindles and (or) check for damage to mower deck.
Abnormal vibration	1. Cutting blade(s) is/are bent or unbalanced. 2. Blade mounting bolt is loose. 3. Engine mounting bolts are loose. 4. Loose engine pulley, idler pulley, or blade pulley. 5. Engine pulley is damaged. 6. Blade spindle is bent. 7. Belt is damaged.	1. Install new cutting blade(s). 2. Tighten the blade mounting bolt. 3. Tighten the engine mounting bolts. 4. Tighten the appropriate pulley. 5. Contact an Authorized Service Dealer. 6. Contact an Authorized Service Dealer. 7. Install new belt.

Problem	Possible Cause	Corrective Action
Blades do not rotate.	1. Deck belt is worn, loose or broken.	1. Install new deck belt.
	2. Deck belt is off pulley.	2. Install belt on clutch and deck pulleys, idlers, and tensioning idler per routing decal on deck.
	3. Broken or missing idler spring.	3. Replace the spring.
	4. Drive belt not routed correctly.	4. Refer to belt routing decal on deck.
Clutch will not engage.	1. Fuse is blown.	1. Replace fuse. Check coil resistance, battery charge, charging system, and wiring connections and replace if necessary.
	2. Low voltage supply at the clutch.	2. Check coil resistance, battery charge, charging system, and wiring connections and replace if necessary.
	3. Damaged coil.	3. Replace clutch.
	4. Inadequate current supply.	4. Repair or replace clutch lead wire or electrical system. Clean connector contacts.
	5. Rotor/armature airgap is too large.	5. Remove shim or replace clutch.

Schematics

Electrical Logic Schematic — Kawasaki (CARB) Models

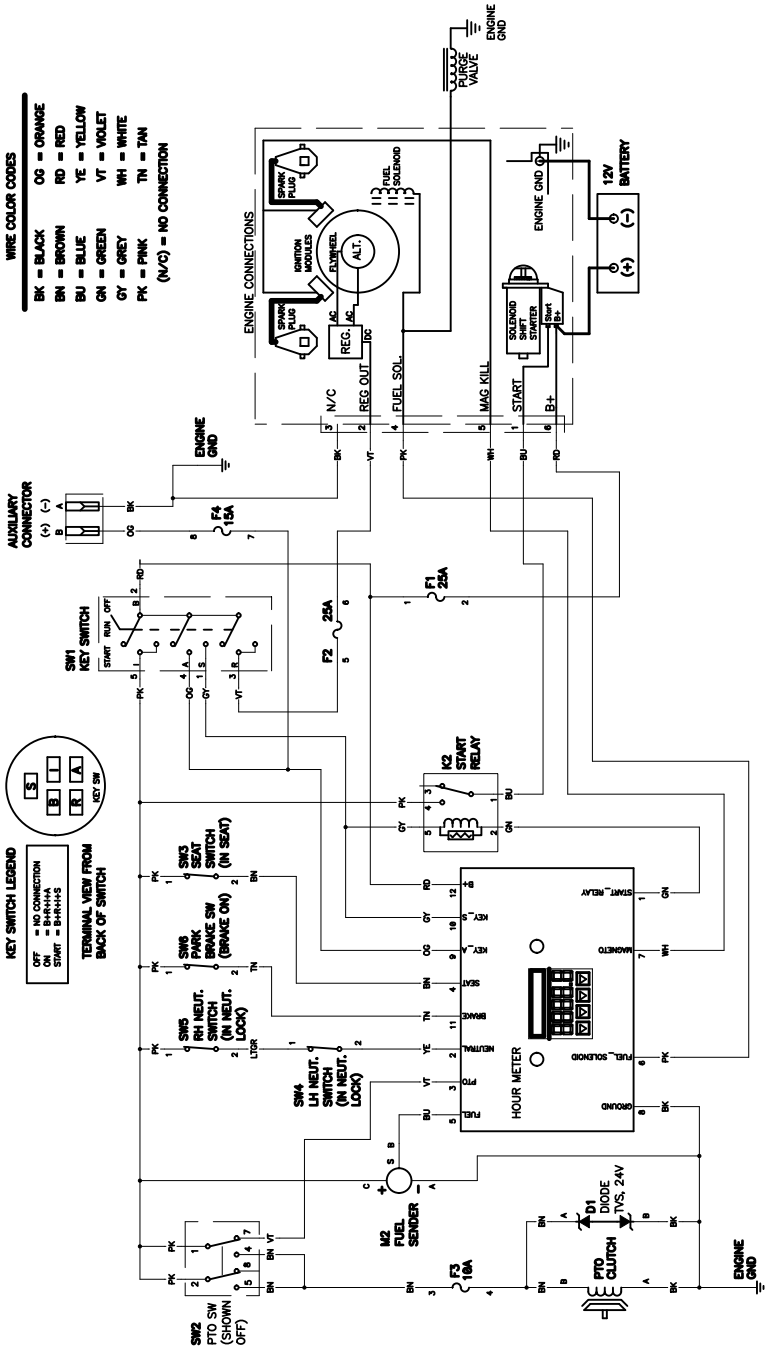

g200804

Electrical Logic Schematic — Kawasaki (CARB) Models

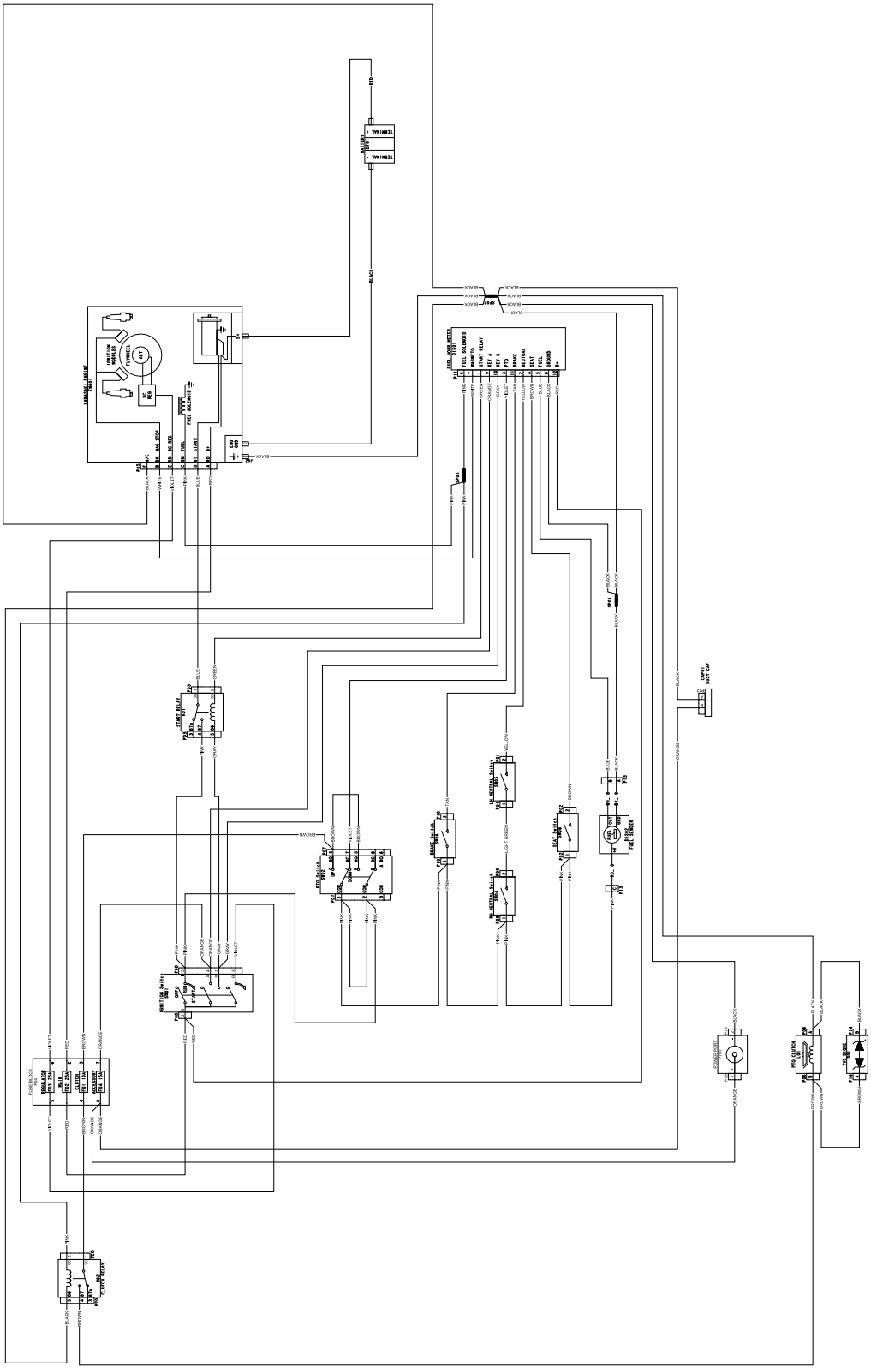

g590979

Electrical Logic Schematic — Kohler EFI Equipped Models

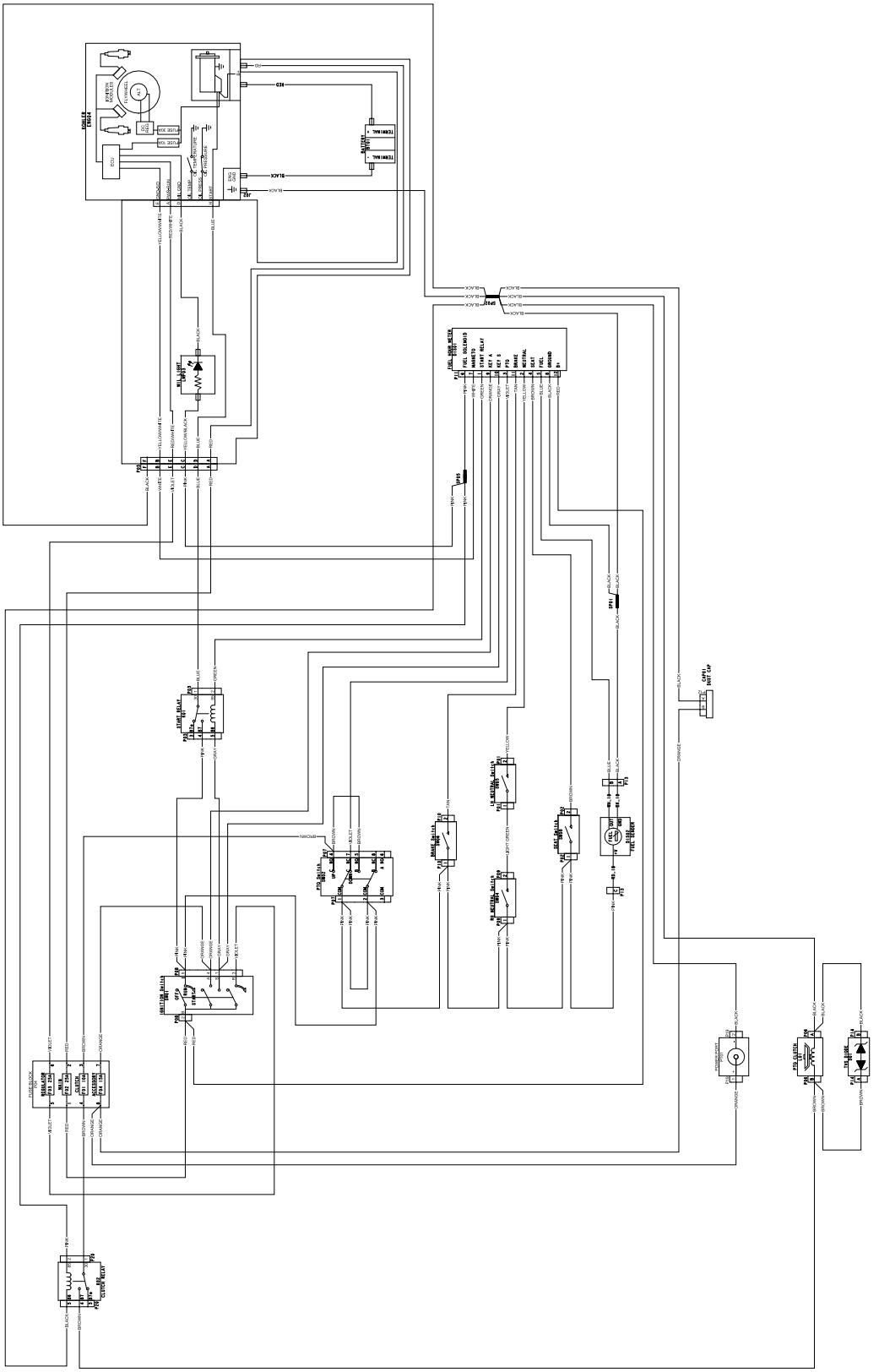

g590952

Hydraulic Diagram

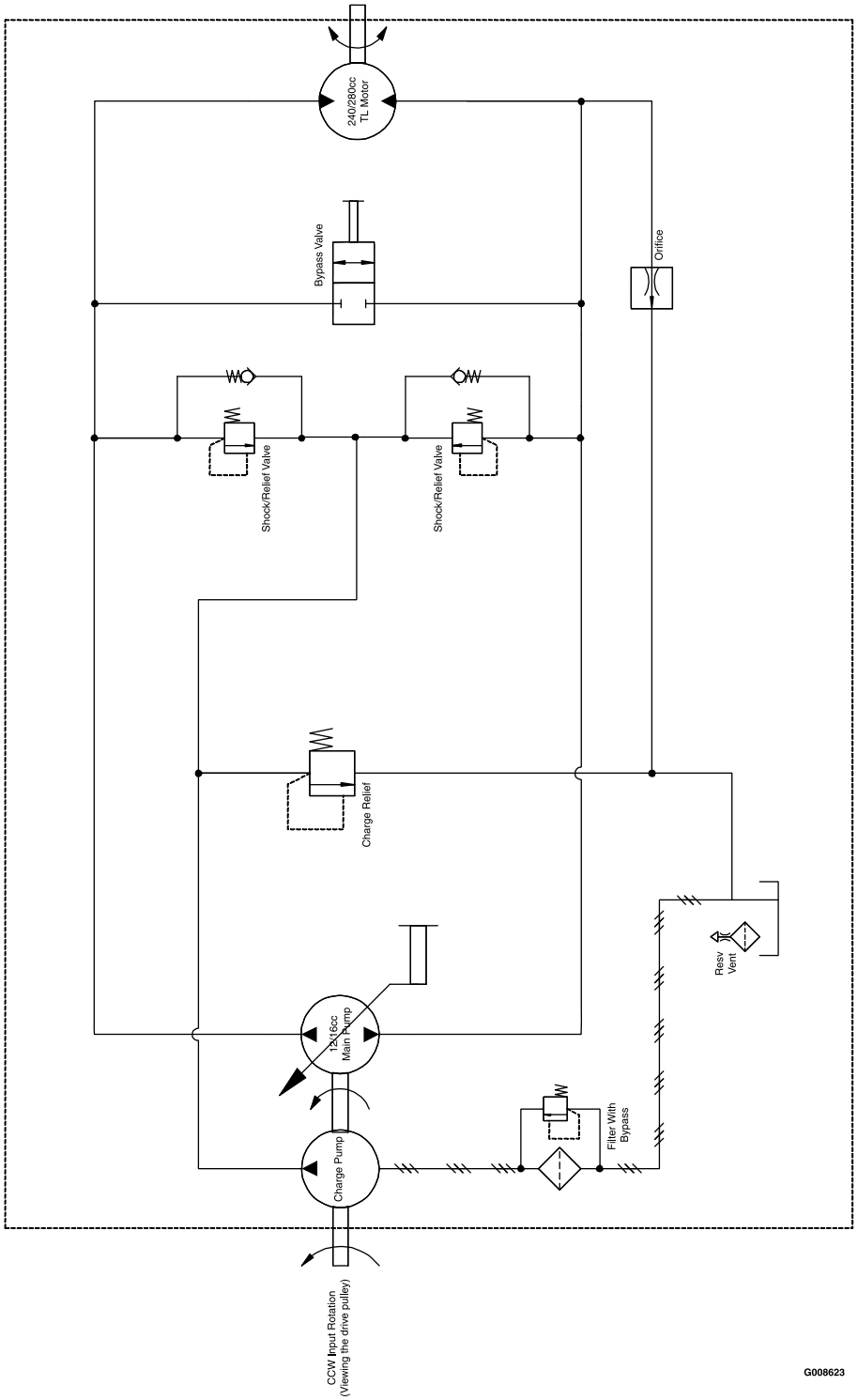

g008623

California Proposition 65 Warning Information

What is this warning?

You may see a product for sale that has a warning label like the following:



WARNING: Cancer and Reproductive Harm—www.p65Warnings.ca.gov.

What is Prop 65?

Prop 65 applies to any company operating in California, selling products in California, or manufacturing products that may be sold in or brought into California. It mandates that the Governor of California maintain and publish a list of chemicals known to cause cancer, birth defects, and/or other reproductive harm. The list, which is updated annually, includes hundreds of chemicals found in many everyday items. The purpose of Prop 65 is to inform the public about exposure to these chemicals.

Prop 65 does not ban the sale of products containing these chemicals but instead requires warnings on any product, product packaging, or literature with the product. Moreover, a Prop 65 warning does not mean that a product is in violation of any product safety standards or requirements. In fact, the California government has clarified that a Prop 65 warning "is not the same as a regulatory decision that a product is 'safe' or 'unsafe.'" Many of these chemicals have been used in everyday products for years without documented harm. For more information, go to https://oag.ca.gov/prop65/faqs-view-all.

A Prop 65 warning means that a company has either (1) evaluated the exposure and has concluded that it exceeds the "no significant risk level"; or (2) has chosen to provide a warning based on its understanding about the presence of a listed chemical without attempting to evaluate the exposure.

Does this law apply everywhere?

Prop 65 warnings are required under California law only. These warnings are seen throughout California in a wide range of settings, including but not limited to restaurants, grocery stores, hotels, schools, and hospitals, and on a wide variety of products. Additionally, some online and mail order retailers provide Prop 65 warnings on their websites or in catalogs.

How do the California warnings compare to federal limits?

Prop 65 standards are often more stringent than federal and international standards. There are various substances that require a Prop 65 warning at levels that are far lower than federal action limits. For example, the Prop 65 standard for warnings for lead is 0.5 µg/day, which is well below the federal and international standards.

Why don't all similar products carry the warning?

- Products sold in California require Prop 65 labelling while similar products sold elsewhere do not.
- A company involved in a Prop 65 lawsuit reaching a settlement may be required to use Prop 65 warnings for its products, but other companies making similar products may have no such requirement.
- The enforcement of Prop 65 is inconsistent.
- Companies may elect not to provide warnings because they conclude that they are not required to do so under Prop 65; a lack of warnings for a product does not mean that the product is free of listed chemicals at similar levels.

Why does Exmark include this warning?

Exmark has chosen to provide consumers with as much information as possible so that they can make informed decisions about the products they buy and use. Exmark provides warnings in certain cases based on its knowledge of the presence of one or more listed chemicals without evaluating the level of exposure, as not all the listed chemicals provide exposure limit requirements. While the exposure from Exmark products may be negligible or well within the "no significant risk" range, out of an abundance of caution, Exmark has elected to provide the Prop 65 warnings. Moreover, if Exmark does not provide these warnings, it could be sued by the State of California or by private parties seeking to enforce Prop 65 and subject to substantial penalties.

Service Record

Date:	Description of Work Done:	Service Done By:

MAXIMIZE THE PERFORMANCE OF YOUR EXMARK MACHINE.



EXMARK® PREMIUM ENGINE OIL

Exmark now offers a family of engine oil viscosities to perform well in any environment. Each viscosity has the same synthetic formulation to give you what you need in punishing conditions. We designed each grade to the highest quality, making it ideal even for diesel applications. Coupled with Exmark Premium Fuel Treatment, we have the performance products to make your machine hum.

EXMARK PREMIUM ENGINE OIL SAE 30/10W-30

- Meets zero shear requirements of a straight grade SAE 30 as well as the cold temp properties of a 10W-30.
- Most versatile oil in the industry.
- Superior corrosion protection over conventional oil - even in corrosive, humid environments.

EXMARK PREMIUM ENGINE OIL SAE 10W-50

- Full synthetic formulation gives you peak performance. Don't settle for less.
- Wide span multi-grade combines easy starting in cold weather with maximum protection in high temperature operation.
- Reduce friction & wear over standard mineral formulations.

EXMARK PREMIUM ENGINE OIL UTV FORMULATION

- 4-cycle high-temp formulation.
- Heavier viscosity, full synthetic, perfect for your UTV.

EXMARK PREMIUM ENGINE OIL SAE 20W-50

- Perfect for your big block engine, or any application in severe service.
- Same full synthetic formulation as all other Exmark Premium viscosities.
- Also effective for use in severe service small block engines.

EXMARK PREMIUM ENGINE OIL SAE 0W-40

- The perfect choice for when the weather turns cold or unpredictable, and your Exmark UTV has to perform.
- Commercial quality for severe service.
- Advanced additive package helps prevent corrosion from long-term storage.

EXMARK PREMIUM UTV EXTREME CONDITIONS GEAR OIL

- SAE 80W-90, designed to keep your UTV performing at its peak.
- Shear stable, hypoid gear lube.
- Includes a premium additive system to combat wear, oxidation, rust & corrosion.

Available from your local Exmark dealer. Find your closest dealer at exmark.com

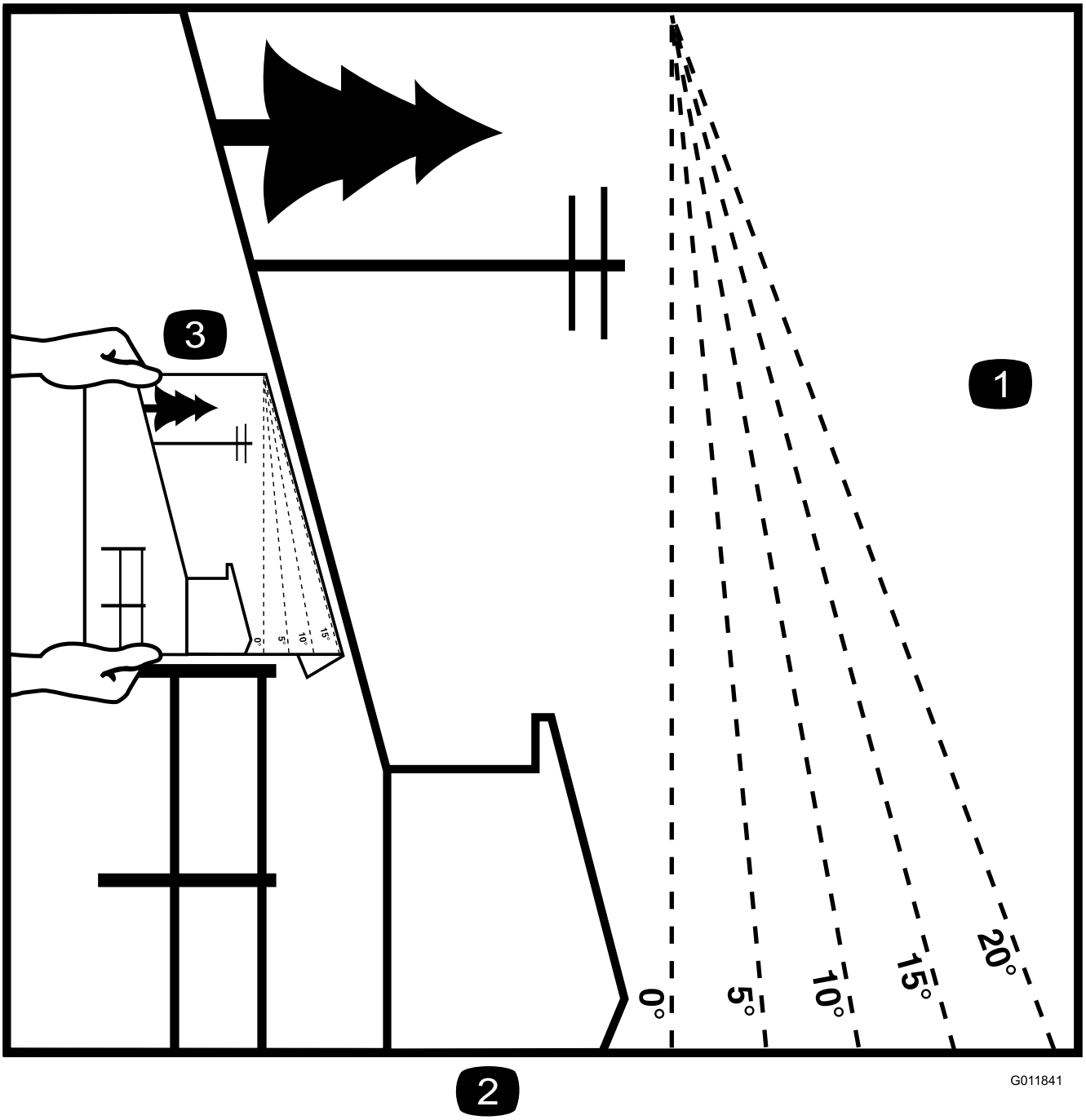

Figure 54

This page may be copied for personal use.

1. The maximum slope you can operate the machine on is **15 degrees**. Use the slope indicator to determine the degree of slope of hills before operating. **Do Not operate this machine on a slope greater than 15 degrees.** Fold along the appropriate line to match the recommended slope.
2. Align this edge with a vertical surface, a tree, building, fence pole, etc.
3. Example of how to compare slope with folded edge.

EXMARK ACCESSORIES AND OPTIONS*

MID-MOUNT RIDING ACCESSORIES AND OPTIONS

CUSTOM RIDE SEAT SUSPENSION SYSTEM
FULL SUSPENSION SEAT
DECK LIFT ASSIST KIT
HITCH KIT
LIGHT KIT
12V POWER PORT
MICRO-MULCH SYSTEM
OPERATOR CONTROLLED DISCHARGE
SUN SHADE
TRASH CONTAINER
TURF STRIPER
ULTRA VAC COLLECTION SYSTEM
ULTRA VAC QUICK DISPOSAL SYSTEM

OUT-FRONT RIDING ACCESSORIES AND OPTIONS

CUSTOM RIDE SEAT SUSPENSION SYSTEM
DUAL-TAIL WHEEL
FLOOR PAN EXTENDER
HITCH KIT
LIGHT KIT
MICRO-MULCH SYSTEM
ROLL OVER PROTECTION SYSTEM (ROPS)
SNOW BLADE
SNOWBLOWER
SUN SHADE
TRASH CONTAINER
ULTRA VAC COLLECTION SYSTEM
ULTRA VAC QUICK DISPOSAL SYSTEM
WEATHER CAB

WALK-BEHIND ACCESSORIES AND OPTIONS

GRASS CATCHER
MICRO-MULCH SYSTEM
TURF STRIPER
STANDON

*Some accessories and options not available for some models.

Place Model No. and Serial No. Label Here (Included in the Literature Pack) or Fill in Below

Model No. _____

Serial No. _____

Date Purchased _____

Engine Model No. and Spec. No. _____

Engine Serial No. (E/No) _____

©2026 Exmark Mfg. Co., Inc.
415 Industrial Row
Beatrice, NE 68310
All Rights Reserved

Part No. 3478-213 Rev. B
(402) 223-6375
Printed in the USA



www.exmark.com