Installation Manual

Installation and Appliance Setup

***CAUTION! Risk of Fire! DO NOT** store instruction manuals inside fireplace cavity. High temperatures could cause a fire.*

INSTALLER: Leave this manual with the appliance, not inside the appliance.
CONSUMER: Retain this manual for future reference. Do not store inside the appliance.

***NOTICE: DO NOT** discard this manual!*

QUARTZ SERIES

Models:

QUARTZ32IFTN
QUARTZ32IFTL
QUARTZ36IFTN
QUARTZ36IFTL
QUARTZ42IFTN
QUARTZ42IFTL

MAJESTIC

GAS-FIRED

C UL US LISTED

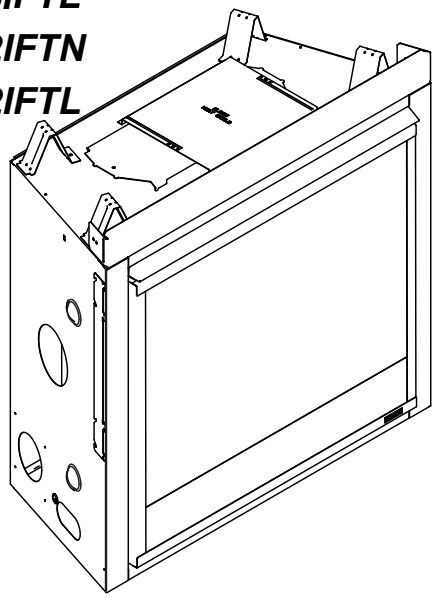

This appliance may be installed as an OEM installation in manufactured home (USA only) or mobile home and must be installed in accordance with the manufacturer's instructions and the *Manufactured Home Construction and Safety Standard, Title 24 CFR, Part 3280* in the United States, or the *Standard for Installation in Mobile Homes, CAN/CSA Z240 MH Series,* in Canada.

This appliance is only for use with the type(s) of gas indicated on the rating plate. This appliance is not convertible for use with other gases, unless a certified kit is used.

⚠ WARNING:
FIRE OR EXPLOSION HAZARD
Failure to follow safety warnings exactly could result in serious injury, death, or property damage.

- **DO NOT** store or use gasoline or other flammable vapors and liquids in the vicinity of this or any other appliance.
- **What to do if you smell gas**
  - **DO NOT** try to light any appliance.
  - **DO NOT** touch any electrical switch. **DO NOT** use any phone in your building.
  - Leave the building immediately.
  - Immediately call your gas supplier from a neighbor's phone. Follow the gas supplier's instructions.
  - If you cannot reach your gas supplier, call the fire department.
- Installation and service must be performed by a qualified installer, service agency, or the gas supplier.

⚠ DANGER

HOT GLASS WILL CAUSE BURNS.

DO NOT TOUCH GLASS UNTIL COOLED.

NEVER ALLOW CHILDREN TO TOUCH GLASS.

A barrier designed to reduce the risk of burns from the hot viewing glass is provided with this appliance and must be installed for the protection of children and other at-risk individuals.

Decorative barrier front provided with this appliance.

Pour demander un exemplaire en français de ce manuel d'installation, visitez www.majesticproducts.com.

⚠ Safety Alert Key:

- ***DANGER!*** *Indicates a hazardous situation which, if not avoided will result in death or serious injury.*
- ***WARNING!*** *Indicates a hazardous situation which, if not avoided could result in death or serious injury.*
- ***CAUTION!*** *Indicates a hazardous situation which, if not avoided, could result in minor or moderate injury.*
- ***NOTICE:*** *Used to address practices not related to personal injury.*

Note: *The term "recommend" or "recommended" does not indicate a requirement. It is a best practice suggested by Hearth & Home Technologies®.*

Table of Contents

Installation Standard Work Checklist 3

1 Product Specific and Important Safety Information

A. Appliance Certification 4
B. Glass Specifications 4
C. BTU Specifications 4
D. High Altitude Installations 4
E. Non-Combustible Materials Specification 5
F. Combustible Materials Specification 5
G. Electrical Codes 5
H. California 5
I. Requirements for the Commonwealth of Massachusetts . . 6

2 Getting Started

A. Design and Installation Considerations 7
B. Good Faith Wall Surface 7
C. Tools and Supplies Needed 7
D. Inspect Appliance and Components 8

3 Framing and Clearances

A. Appliance/Decorative Barrier Front Dimension Diagrams . 9
B. Appliance Location and Clearances to Combustibles . . . 11
➔ C. Constructing the Appliance Chase 13
D. Floor Protection 13

4 Termination Location and Vent Information

➔ A. Approved Pipe 14
B. Vent Termination Minimum Clearances 14
C. Vent Terminal Clearances 16
D. Use of Elbows 17
➔ E. Use of Flex Vent (SLP-FLEX Series 6-5/8 Inch) 18
➔ F. Vent Diagrams 19

5 Vent Clearances and Vent Framing

➔ A. Vent Clearances to Combustibles 33
B. Wall Penetration Framing/Firestops 34
C. Ceiling Firestop/Floor Penetration Framing 35
D. Install Attic Insulation Shield 35

6 Appliance Preparation

A. Vent Collar Preparation 36
B. Prepare For Heat Management 40
C. Securing and Leveling the Appliance 40

7 Venting

A. Assemble Vent Sections 41
B. Assemble Slip Sections 44
C. Secure the Vent Sections 44
D. Disassemble Vent Sections 45
E. Vertical Termination Requirements 46
F. Horizontal Termination Requirements . . . . . 47 ➔

8 Electrical Information

A. General Information 49
B. Wiring Requirements 51

9 Gas Information

A. Fuel Conversion 53
B. Gas Pressure 53
C. Gas Connection 53
D. High Altitude Installations 53
E. Air Shutter Setting 54
F. Burner Identification/Verification 55

10 Finishing

A. Facing Material 56
B. Installing a Television 56
C. Mantel and Wall Projections 57
D. Decorative Barrier Front Dimensions for Finishing 59

11 Appliance Setup

A. Remove the Shipping Materials 60
B. Clean the Appliance 60
C. Install the Optional Refractory Kit 60
D. Install the Log Assembly 61
E. IntelliFire Touch® Control System Setup 67
F. Fixed Glass Assembly Removal and Replacement 67
G. Install Majestic Decorative Barrier Front and Hood 68

12 Reference Materials

A. Vent Components Diagrams . . . . . 69 ➔
B. Accessories 81

➔ = Contains updated information.

Installation Standard Work Checklist

ATTENTION INSTALLER:

Follow this Standard Work Checklist

This standard work checklist is to be used by the installer in conjunction with, not instead of, the instructions contained in this installation manual.

Customer: _____ **Date Installed:** _____

Lot/Address: _____ **Location of Fireplace:** _____

_____ **Installer:** _____

Model (circle one): QUARTZ32IFTN QUARTZ32IFTL QUARTZ36IFTN QUARTZ36IFTL QUARTZ42IFTN QUARTZ42IFTL

Dealer/Distributor Phone # _____

Serial #: _____

WARNING! Risk of Fire or Explosion! *Failure to install appliance according to these instructions could lead to a fire or explosion. Install ONLY components and accessories approved by Hearth & Home Technologies. Unapproved components and accessories could cause fireplace to overheat.*

Appliance Install	**YES**	**IF NO, WHY?**
Verified that the chase is insulated and sealed. (Pg. 13)	☐	_____
Verified clearances to combustibles. (Pg. 11-12)	☐	_____
Fireplace is plum, level, square and secured. (Pg.40)	☐	_____
Venting/Chimney Section 7 (Pg 41-48)		
Venting configuration complies to vent diagrams.	☐	_____
Venting installed, locked and secured in place with proper clearance. (Need to order separately.)	☐	_____
Firestops installed.	☐	_____
Attic insulation shield installed.	☐	_____
Exterior wall/Roof flashing installed and sealed.	☐	_____
Terminations installed and sealed.	☐	_____
Electrical Section 8 (Pg 49-52)		
Unswitched power (110-120 VAC) provided to the appliance.	☐	_____
Switch wires properly installed.	☐	_____
Gas Section 9 (Pg 53-55)		
Proper appliance for fuel type.	☐	_____
Was a conversion performed?	☐	_____
Leak check performed and inlet pressure verified.	☐	_____
Verified proper air shutter setting for installation type.	☐	_____
Finishing Section 10 (Pg 56-59)		
Combustible materials not installed in non-combustible areas.	☐	_____
Verified all clearances meet installation manual requirements.	☐	_____
Mantels and wall projections comply with installation manual requirements.	☐	_____
Appliance Setup Section 11 (Pg 60-68)		
All packaging and protective materials removed (inside & outside of appliance).	☐	_____
Refractories, logs, media and embers installed correctly.	☐	_____
Glass assembly installed and secured.	☐	_____
Accessories installed properly.	☐	_____
Decorative barrier front properly installed.	☐	_____
Manual bag and all of its contents are removed from inside/under the appliance and given to party responsible for use and operation.	☐	_____
Started appliance and verified no gas leaks exist.	☐	_____

Hearth & Home Technologies recommends the following:

- Photographing the installation and copying this checklist for your file.
- That this checklist remain visible at all times on the appliance until the installation is complete.

Comments: Further description of the issues, who is responsible (Installer/ Builder/ Other Trades, etc) and corrective action needed _____

_____

_____

Comments Communicated to party responsible _____ by _____ on _____
(Builder / Gen. Contractor/) (Installer) (Date)

➔ = Contains updated information.

2641-982 1/20

1 Product Specific and Important Safety Information

A. Appliance Certification

MODELS: **QUARTZ32IFTN, QUARTZ32IFTL, QUARTZ36IFTN, QUARTZ36IFTL QUARTZ42IFTN, QUARTZ42IFTL**

LABORATORY: **Underwriters Laboratories, Inc. (UL)**

TYPE: **Direct Vent Heater**

STANDARD: **CSA / ANSI Z21.88:19 • CSA 2.33:19**

This product is listed to ANSI standards for "Vented Gas Fireplace Heaters" and applicable sections of "Gas Burning Heating Appliances for Manufactured Homes and Recreational Vehicles", and "Gas Fired Appliances for Use at High Altitudes". Also Certified for Installation in a Bedroom or a Bedsitting Room.

NOTICE: *This installation must conform with local codes. In the absence of local codes you must comply with the National Fuel Gas Code, ANSI Z223.1-latest edition in the U.S.A. and the CAN/CGA B149 Installation Codes in Canada.*

NOT INTENDED FOR USE AS A PRIMARY HEAT SOURCE. This appliance is tested and approved as either supplemental room heat or as a decorative appliance. It should not be factored as primary heat in residential heating calculations.

B. Glass Specifications

Hearth & Home Technologies appliances manufactured with tempered glass may be installed in hazardous locations such as bathtub enclosures as defined by the Consumer Product Safety Commission (CPSC). The tempered glass has been tested and certified to the requirements of **ANSI Z97.1** and **CPSC 16 CFR 1202** (Safety Glazing Certification Council **SGCC# 1595** and **1597**. Architectural Testing, Inc. Reports **02-31919.01** and **02-31917.01**).

This statement is in compliance with **CPSC 16 CFR Section 1201.5** "Certification and labeling requirements" which refers to **15** U.S. Code **(USC) 2063** stating "…Such certificate shall accompany the product or shall otherwise be furnished to any distributor or retailer to whom the product is delivered."

Some local building codes require the use of tempered glass with permanent marking in such locations. Glass meeting this requirement is available from the factory. Please contact your dealer or distributor to order.

C. BTU Specifications

Models *(U.S. or Canada)*		Maximum Input BTU/h	Minimum Input BTU/h	Orifice Size (DMS)
QUARTZ32IFTN (NG)	*(0-2000 FT)*	21,000	11,250	#44
QUARTZ32IFTL (PROPANE)	*(0-2000 FT)*	18,500	10,000	#55
QUARTZ36IFTN (NG)	*(0-2000 FT)*	24,000	13,000	#42
QUARTZ36IFTL (PROPANE)	*(0-2000 FT)*	20,500	11,500	#54
QUARTZ42IFTN (NG)	*(0-2000 FT)*	28,500	14,500	#39
QUARTZ42IFTL (PROPANE)	*(0-2000 FT)*	26,000	13,500	#53

D. High Altitude Installations

NOTICE: *If the heating value of the gas has been reduced, these rules do not apply. Check with your local gas utility or authorities having jurisdiction.*

When installing above 2000 feet elevation:

- In the USA: Reduce input rate 4% for each 1000 feet above 2000 feet.
- In CANADA: Input ratings are certified without a reduction of input rate for elevations up to 4500 feet (1370 m) above sea level. Please consult provincial and/or local authorities having jurisdiction for installations at elevations above 4500 feet (1370 m).

Check with your local gas utility to determine proper orifice size.

E. Non-Combustible Materials Specification

Material which will not ignite and burn. Such materials are those consisting entirely of steel, iron, brick, tile, concrete, slate, glass or plasters, or any combination thereof.

Materials that are reported as passing **ASTM E 136, Standard Test Method for Behavior of Materials in a Vertical Tube Furnace at 750 ºC** shall be considered non-combustible materials.

F. Combustible Materials Specification

Materials made of or surfaced with wood, compressed paper, plant fibers, plastics, or other material that can ignite and burn, whether flame proofed or not, or plastered or unplastered shall be considered combustible materials.

G. Electrical Codes

NOTICE: *This appliance must be electrically wired and grounded in accordance with local codes or, in the absence of local codes, with* **National Electric Code ANSI/NFPA 70-latest edition** *or the* **Canadian Electric Code CSA C22.1.**

- A 110-120 VAC circuit for this product must be protected with ground-fault circuit interrupter protection, in compliance with the applicable electrical codes, when it is installed in locations such as in bathrooms or near sinks.

H. California

WARNING: This product and the fuels used to operate this product (liquid propane or natural gas), and the products of combustion of such fuels, can expose you to chemicals including benzene, which is known to the State of California to cause cancer and reproductive harm. For more information go to: www.P65Warnings.ca.gov.

Note: The following requirements reference various Massachusetts and national codes not contained in this document.

I. Requirements for the Commonwealth of Massachusetts

For all side wall horizontally vented gas fueled equipment installed in every dwelling, building or structure used in whole or in part for residential purposes, including those owned or operated by the Commonwealth and where the side wall exhaust vent termination is less than seven (7) feet above finished grade in the area of the venting, including but not limited to decks and porches, the following requirements shall be satisfied:

Installation of Carbon Monoxide Detectors

At the time of installation of the side wall horizontal vented gas fueled equipment, the installing plumber or gas fitter shall observe that a hard wired carbon monoxide detector with an alarm and battery back-up is installed on the floor level where the gas equipment is to be installed. In addition, the installing plumber or gas fitter shall observe that a battery operated or hard wired carbon monoxide detector with an alarm is installed on each additional level of the dwelling, building or structure served by the side wall horizontal vented gas fueled equipment. It shall be the responsibility of the property owner to secure the services of qualified licensed professionals for the installation of hard wired carbon monoxide detectors.

In the event that the side wall horizontally vented gas fueled equipment is installed in a crawl space or an attic, the hard wired carbon monoxide detector with alarm and battery back-up may be installed on the next adjacent floor level.
In the event that the requirements of this subdivision can not be met at the time of completion of installation, the owner shall have a period of thirty (30) days to comply with the above requirements; provided, however, that during said thirty (30) day period, a battery operated carbon monoxide detector with an alarm shall be installed.

Approved Carbon Monoxide Detectors

Each carbon monoxide detector as required in accordance with the above provisions shall comply with NFPA 720 and be ANSI/UL 2034 listed and IAS certified.

Signage

A metal or plastic identification plate shall be permanently mounted to the exterior of the building at a minimum height of eight (8) feet above grade directly in line with the exhaust vent terminal for the horizontally vented gas fueled heating appliance or equipment. The sign shall read, in print size no less than one-half (1/2) in. in size, **"GAS VENT DIRECTLY BELOW. KEEP CLEAR OF ALL OBSTRUCTIONS".**

Inspection

The state or local gas inspector of the side wall horizontally vented gas fueled equipment shall not approve the installation unless, upon inspection, the inspector observes carbon monoxide detectors and signage installed in accordance with the provisions of 248 CMR 5.08(2)(a)1 through 4.

Exemptions

The following equipment is exempt from 248 CMR 5.08(2)(a)1 through 4:

- The equipment listed in Chapter 10 entitled "Equipment Not Required To Be Vented" in the most current edition of NFPA 54 as adopted by the Board; and
- Product Approved side wall horizontally vented gas fueled equipment installed in a room or structure separate from the dwelling, building or structure used in whole or in part for residential purposes.

MANUFACTURER REQUIREMENTS

Gas Equipment Venting System Provided

When the manufacturer of Product Approved side wall horizontally vented gas equipment provides a venting system design or venting system components with the equipment, the instructions provided by the manufacturer for installation of the equipment and the venting system shall include:

- Detailed instructions for the installation of the venting system design or the venting system components; and
- A complete parts list for the venting system design or venting system.

Gas Equipment Venting System NOT Provided

When the manufacturer of a Product Approved side wall horizontally vented gas fueled equipment does not provide the parts for venting the flue gases, but identifies "special venting systems", the following requirements shall be satisfied by the manufacturer:

- The referenced "special venting system" instructions shall be included with the appliance or equipment installation instructions; and
- The "special venting systems" shall be Product Approved by the Board, and the instructions for that system shall include a parts list and detailed installation instructions.

A copy of all installation instructions for all Product Approved side wall horizontally vented gas fueled equipment, all venting instructions, all parts lists for venting instructions, and/or all venting design instructions shall remain with the appliance or equipment at the completion of the installation.

See Gas Connection section for additional Commonwealth of Massachusetts requirements.

2 Getting Started

A. Design and Installation Considerations

WARNING! Risk of Fire or Explosion! *Read all instructions before starting the installation.*

Majestic direct vent gas appliances are designed to operate with all combustion air siphoned from outside of the building and all exhaust gases expelled to the outside. No additional outside air source is required.

Installation MUST comply with local, regional, state and national codes and regulations. Consult insurance carrier, local building inspector, fire officials or authorities having jurisdiction over restrictions, installation inspection and permits.

Before installing, determine the following:

- Where the appliance is to be installed.
- The vent system configuration to be used.
- Gas supply piping requirements.
- Provisions for optional heat management system.
- Electrical wiring requirements.
- Framing and finishing details.
- Whether optional accessories—devices such as a fan, wall switch, or remote control—are desired.

Installation and service of this appliance should be performed by qualified personnel. Hearth & Home Technologies recommends HHT Factory Trained or NFI certified professionals.

hearthED FACTORY TRAINING Fuel Your Fire

NFI NATIONAL FIREPLACE INSTITUTE A CERTIFICATION AGENCY

Improper installation, adjustment, alteration, service or maintenance can cause injury or property damage. For assistance or additional information, consult a qualified service technician, service agency or your dealer.

B. Good Faith Wall Surface

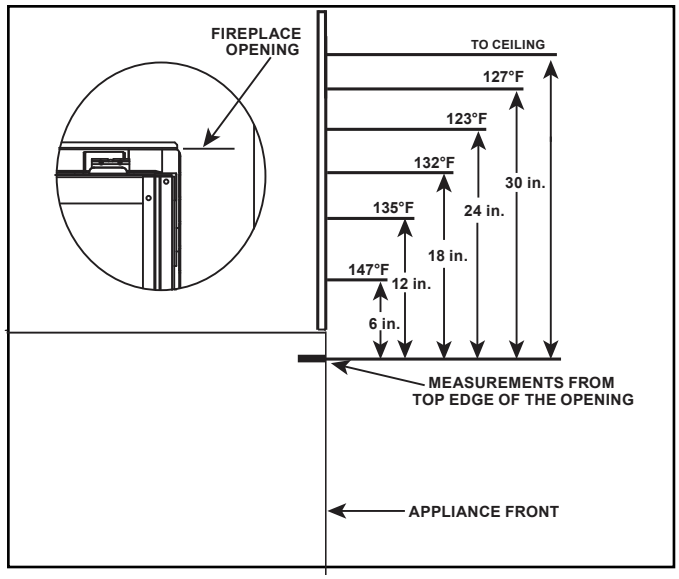

Figure 2.1 Good Faith Wall Surface Temperatures Above Appliance

NOTICE: *Surface temperatures listed above are taken with a temperature measuring probe as prescribed by the test standard used for appliance certification. Temperatures on walls or mantels taken with an infrared thermometer may yield increased temperatures of up to 30 °F (17 °C) or more depending on the thermometer settings and material characteristics being measured. Use appropriate finishing materials that are able to withstand these conditions. For additional finishing guidelines, see Section 10.*

C. Tools and Supplies Needed

Before beginning the installation be sure that the following tools and building supplies are available.

Hand Tools	Tape measure
Level	Framing material
Manometer	Framing square
Voltmeter	Electric drill and bits (1/4 in.)
Plumb line	Safety glasses/Gloves
Wrenches	Reciprocating saw

1/4 in. nut driver

Non-corrosive leak check solution

1/2 - 3/4 in. length, #6 or #8 Self-drilling screws

Caulking material (300 ºF minimum continuous exposure rating)

D. Inspect Appliance and Components

WARNING! Risk of Fire or Explosion! *Damaged parts could impair safe operation.* ***DO NOT i****nstall damaged, incomplete or substitute components. Keep appliance dry.*

WARNING! Risk of Fire, Explosion or Electric Shock! DO NOT *use this appliance if any part has been under water. Call a qualified service technician to inspect the appliance and to replace any part of the control system and/or gas control which has been under water.*

- Carefully remove the appliance and components from the packaging.
- The vent system components and decorative barrier fronts may be shipped in separate packages.
- If packaged separately, the log set and appliance grate must be installed.
- Report to your dealer any parts damaged in shipment.

Hearth & Home Technologies disclaims any responsibility for, and the warranty will be voided by, the following actions:

- Installation and use of any damaged appliance or vent system component.
- Modification of the appliance or vent system.
- Installation other than as instructed by Hearth & Home Technologies.
- Improper positioning of the logs/media (as applicable) or the glass assembly.
- Installation and/or use of any component part not approved by Hearth & Home Technologies.

3 Framing and Clearances

A. Appliance/Decorative Barrier Front Dimension Diagrams

Dimensions are actual appliance dimensions. Use for reference only. For framing dimensions and clearances refer to Section 5.

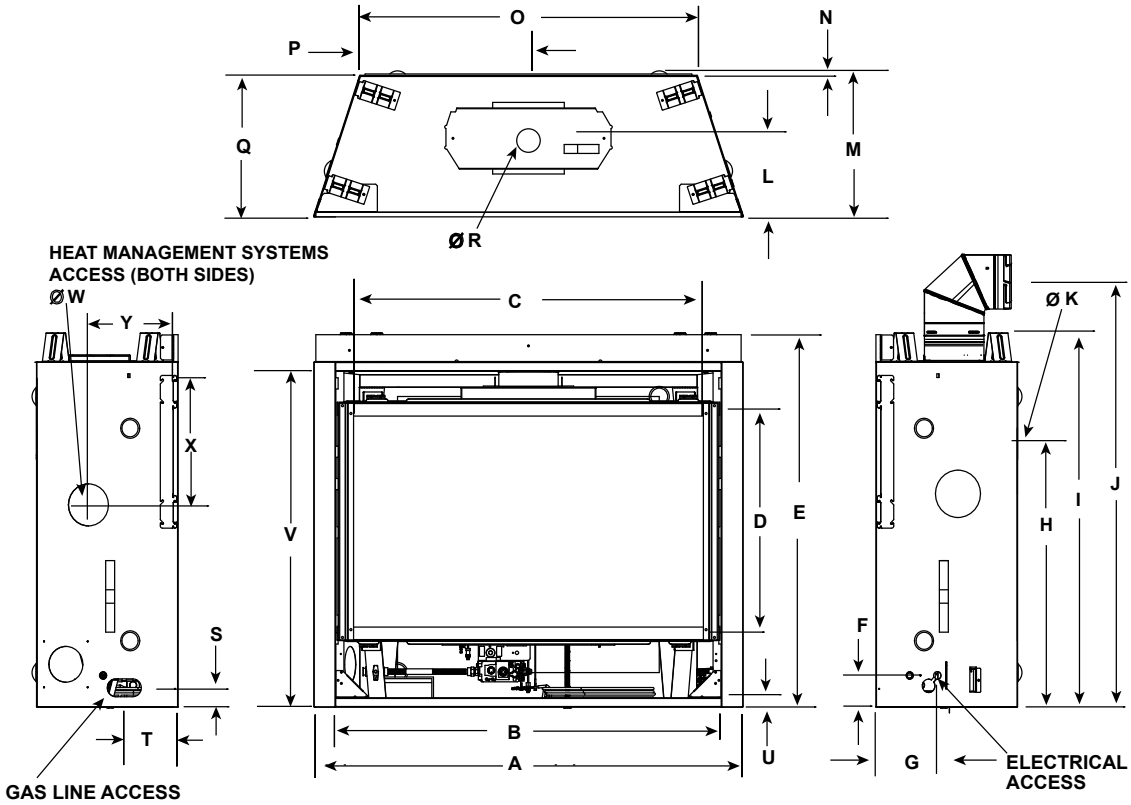

Appliance Dimensions Table

	QUARTZ32IFT		QUARTZ36IFT		QUARTZ42IFT	
Location	**Inches**	**Millimeters**	**Inches**	**Millimeters**	**Inches**	**Millimeters**
A	36	914	41	1041	48	1219
B	31-1/8	791	36-1/8	918	43	1092
C	27-3/16	691	32-1/16	814	39-1/16	992
D	18-1/16	459	21-1/2	546	23-9/16	599
E	34-1/16	865	37-5/8	956	39-9/16	1005
F	3-9/16	90	3-9/16	90	3-9/16	90
G	6-7/8	175	6-7/8	175	6-7/8	175
H	23-3/8	594	26-7/8	683	28-7/8	733
I	34-3/8	873	37-7/8	962	39-7/8	1013
J	36-7/16	926	39-15/16	1014	41-15/16	1065
K	8	203	8	203	8	203
L	8-13/16	224	8-13/16	224	8-13/16	224
M	16-5/16	414	16-5/16	414	16-5/16	414
N	1/2	13	1/2	13	1/2	13
O	25-3/4	654	30-3/4	781	37-3/4	959
P	12-7/8	327	15-3/8	391	18-7/8	479
Q	15-7/8	403	15-7/8	403	15-7/8	403
R	6-5/8	168	6-5/8	168	6-5/8	168
S	2-3/16	56	2-3/16	56	2-3/16	56
T	6	152	6	152	6	152
U	1	25	1	25	1	25
V	30-1/16	764	33-9/16	853	35-9/16	903
W	5	127	5	127	5	127
X	14	356	14	356	14	356
Y	9-1/8	232	9-1/8	232	9-1/8	232

Figure 3.1 Appliance Dimensions

STANDARD DECORATIVE BARRIER FRONT

IMPORTANT! This fireplace requires an installed decorative barrier front to prevent direct contact with the hot viewing glass. DO NOT operate the fireplace with the barrier removed.

If decorative barrier front is not present, contact dealer.

Note: See Section 10 for hearth, mantel and finishing requirements.

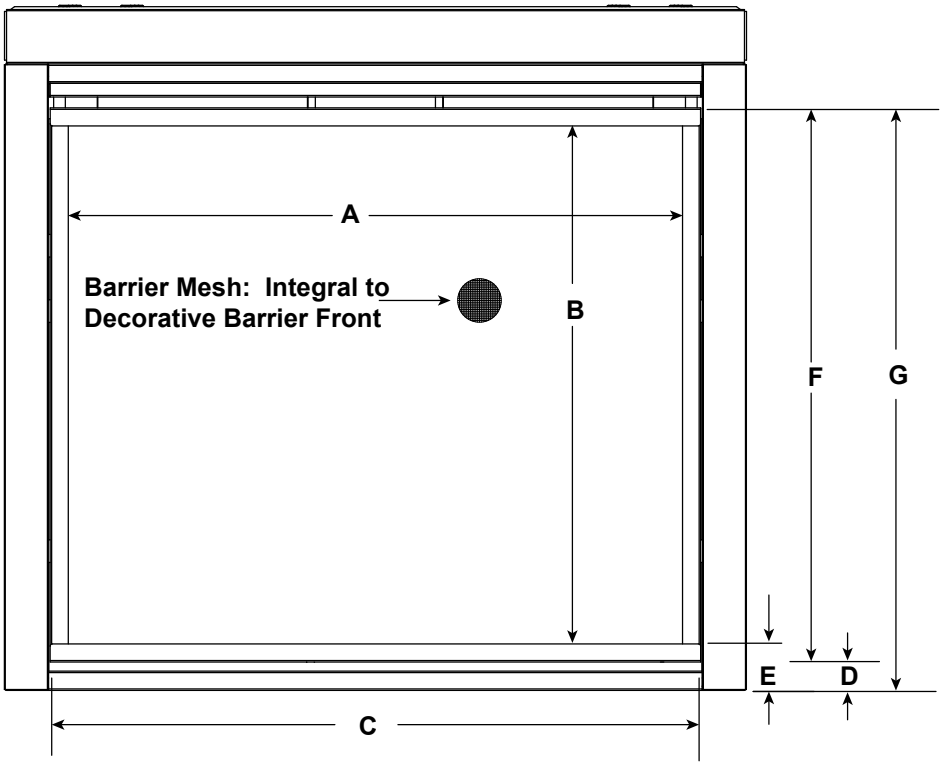

			A	B	C	D	E	F	G
QUARTZ32IFT	SRV2401-021	in.	28-7/8	25-1/8	31	1-5/8	2-5/8	27-1/8	28-3/4
		mm	733	638	787	41	67	689	730
QUARTZ36IFT	DBM36BK	in.	34	28-3/4	35-15/16	1-5/8	2-5/8	30-5/8	32-1/4
		mm	864	730	913	41	67	778	819
QUARTZ42IFT	DBM42BK	in.	40-7/8	30-5/8	43	1-5/8	2-5/8	32-5/8	34-1/4
		mm	1038	778	1092	41	67	829	870

Figure 3.2 Decorative Barrier Front Dimensions - Standard Decorative Barrier Front

B. Appliance Location and Clearances to Combustibles

When selecting a location for the appliance it is important to consider the required clearances to walls and allow sufficient clearance for heat management systems venting. See Figure 3.3 and Figure 3.4.

WARNING! Risk of Fire or Burns! *Provide adequate clearance around air openings and for service access. Due to high temperatures, the appliance should be located out of traffic and away from furniture and draperies.*

NOTICE: *Illustrations reflect typical installations and are FOR DESIGN PURPOSES ONLY. Illustrations/diagrams are not drawn to scale. Actual installation may vary due to individual design preference.*

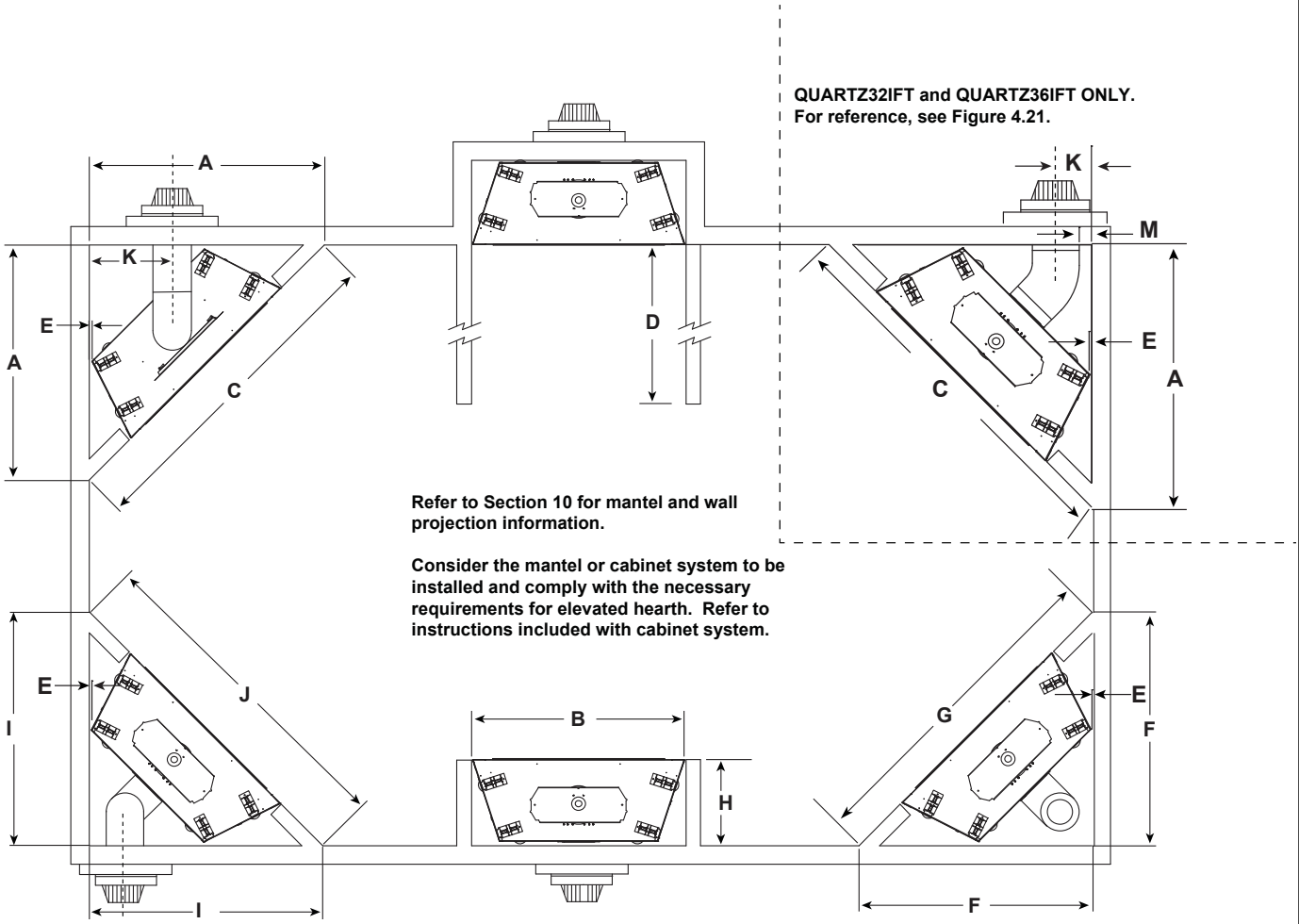

Models		A	B	C	D	E Min.	F	G	H	I	J	K	L	M
QUARTZ32IFT	in.	42	37	59-1/2	See Section 10 for Mantel Projections	1/2	44	62-1/4	16-1/4	48-1/2	68-3/4	15-1/16	7-1/2	1
	mm	1067	940	1511		13	1118	1581	413	1232	1746	383	191	25
QUARTZ36IFT	in.	45-1/2	42	64-3/8		1/2	45-1/2	64-3/8	16-1/4	48-1/2	68-3/4	16-5/8	7-1/2	1
	mm	1156	1067	1635		13	1156	1635	413	1232	1746	422	191	25
QUARTZ42IFT	in.	50-1/2	49	71-1/2		1/2	50-1/2	71-1/2	16-1/4	50-1/2	71-1/2	19-1/2	9-1/4	N/A
	mm	1283	1245	1816		13	1283	1816	413	1283	1816	495	235	N/A

Note: Heat Management Kits require framing dimension adjustments.

Figure 3.3 Appliance Locations

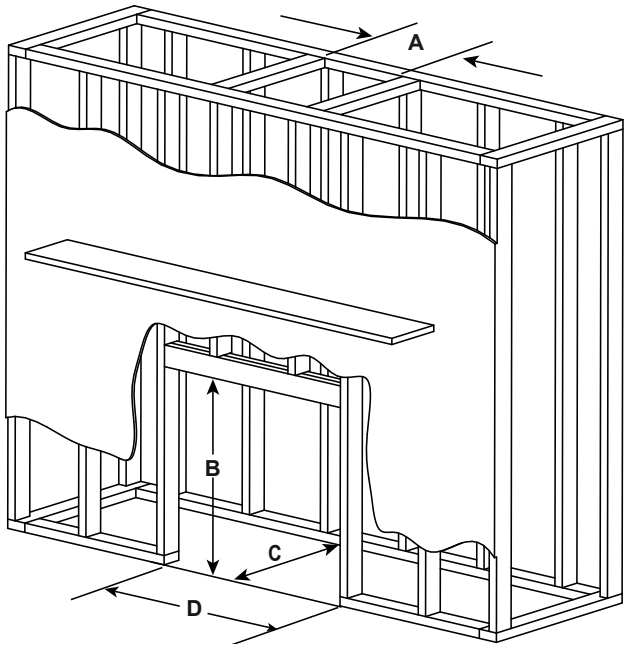

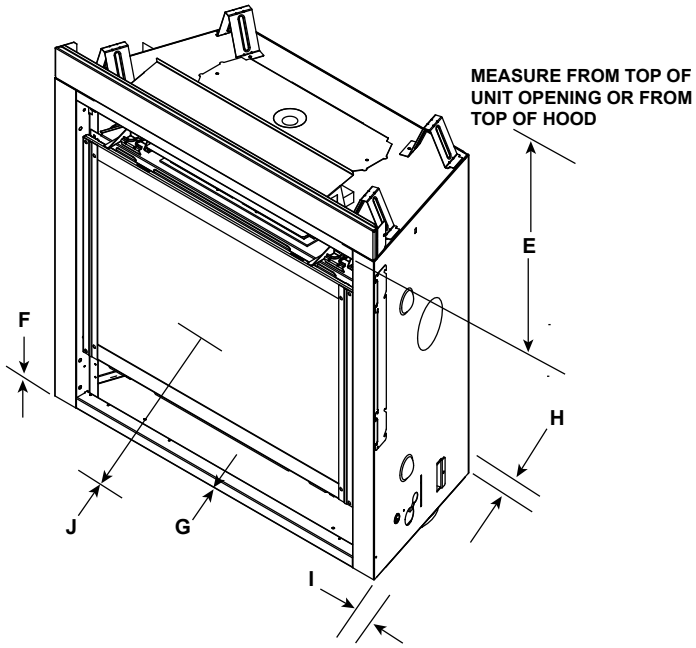

* MINIMUM FRAMING DIMENSIONS													
Models		A		B	C		D	E	F	G	H	I	J
		DVP Pipe	SLP Pipe	Rough Opening (Height)	**DVP Pipe	SLP Pipe	Rough Opening (Width)	Clearance to Ceiling	***Combustible Floor	****Minimum Hearth Required	Behind Appliance	Sides of Appliance	Front of Appliance
		Rough Opening (Width)	Rough Opening (Width)		Rough Opening (Depth)	Rough Opening (Depth)							
QUARTZ32IFTN QUARTZ32IFTL	in.	10	8-5/8	34-3/4	16-1/4	16-1/4	37	32	0	0	1/2	1/2	36
	mm	254	219	882	413	413	940	813	0	0	13	13	914
QUARTZ36IFTN QUARTZ36IFTL	in.	10	8-5/8	38-1/4	16-1/4	16-1/4	42	32	0	0	1/2	1/2	36
	mm	254	219	972	413	413	1067	813	0	0	13	13	914
QUARTZ42IFTN QUARTZ42IFTL	in.	10	8-5/8	40-1/4	16-1/4	16-1/4	49	32	0	0	1/2	1/2	36
	mm	254	219	1022	413	413	1245	813	0	0	13	13	914

* Adjust framing dimensions for interior sheathing (such as sheetrock)
** Add 12 inches when rear venting with one 90º elbow.
*** When using combustible flooring materials, such as carpeting and padding, the combustible flooring material must not extend higher than one inch from the base of the appliance when the appliance is mounted at floor level.
****For installations with vinyl flooring, see Section 3.D.

Figure 3.4 Clearances to Combustibles

C. Constructing the Appliance Chase

NOTICE: *Install appliance on hard metal or wood surfaces extending full width and depth.* ***DO NOT*** *install directly on carpeting, vinyl, or any combustible material other than wood.*

WARNING! Risk of Fire! *Maintain specified air space clearances to appliance and vent pipe:*

- *Insulation and other materials must be secured to prevent accidental contact.*
- *The chase must be properly blocked to prevent blown insulation or other combustibles from entering and making contact with fireplace or chimney.*
- *Failure to maintain airspace may cause overheating and a fire.*

A chase is a vertical box-like structure built to enclose the gas appliance and/or its vent system. In cooler climates the vent should be enclosed inside the chase.

NOTICE: *Treatment of ceiling firestops and wall shield firestops and construction of the chase may vary with the type of building. These instructions are not substitutes for the requirements of local building codes. Therefore, you MUST check local building codes to determine the requirements to these steps.*

NOTICE: Where required by code, install only sprinkler heads with a sprinkler activation temperature classified as Extra High.

- *Sprinklers inside of chase: Keep sprinkler head away from vent and chimney.*
- *Heat Management applications: Maintain 36 inches of clearance to openings from which heat is discharged such as convection slots, passive heat registers, heat zone registers, etc. Refer to Section 6.B for Heat Management options allowed for this appliance.*

Chases should be constructed and insulated in the same manner as the thermal envelope of the home based on the code requirements for that climate zone to prevent air leakage and draft problems. The chase is an extension of the building thermal envelope.

To further prevent drafts and air leakage, the wall shield and ceiling firestops should be sealed with caulk with a minimum of 300 ºF continuous exposure rating to seal gaps. Gas line holes and other openings should be sealed with caulk with a minimum of 300 ºF continuous exposure rating or stuffed with unfaced insulation. If the appliance is being installed on a cement surface, a layer of plywood may be placed underneath to prevent conducting cold up into the room.

Minimum height requirements for an exterior chase on a top-vented appliance are shown in Figure 3.5. Reference Figure 4.5 for additional clearances.

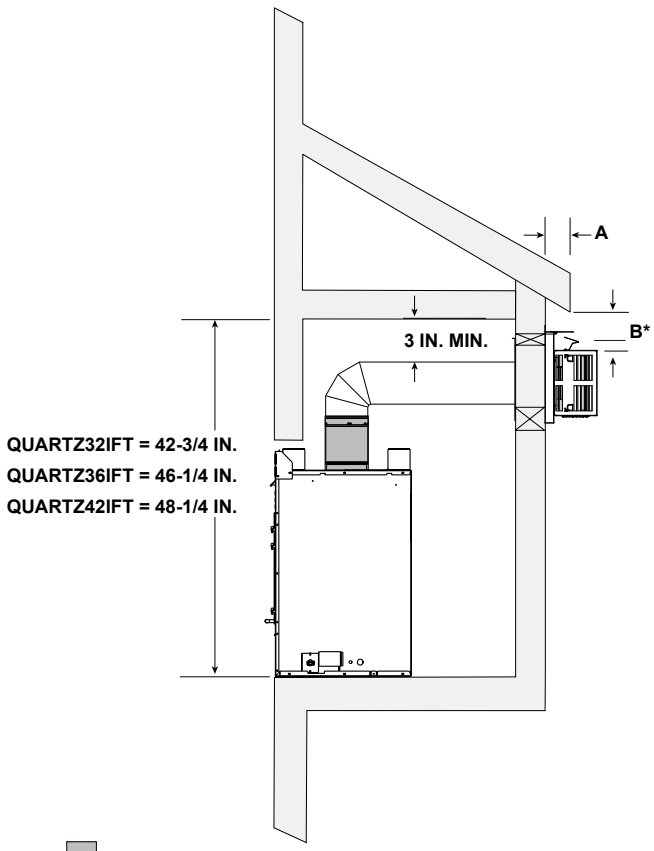

= REQUIRED MINIMUM OFF TOP = 0 IN.

*** NOTE: If overhang "A" is less than 2 inches, clearance from top of termination cap to bottom of overhang "B" MUST be a minimum of 4 inches. If "A" is two inches or greater, see Figure 4.5, "Minimum Clearances for Termination.**

Figure 3.5 Exterior Chase - Minimum Height Requirements

D. Floor Protection

Vinyl Flooring

Vinyl flooring is sensitive to heat. Hearth and Home Technologies does not recommend adhesive based vinyl flooring due to thermal expansion. Floating-style flooring can be used, but will reach temperatures up to 110 °F in a room with ambient temperature of 70 °F. Consult flooring specifications to ensure compatibility.

4 Termination Location and Vent Information

A. Approved Pipe

Approved Pipe - Rigid

WARNING! Risk of Fire or Asphyxiation. *This appliance requires a separate vent.* ***DO NOT*** *vent to a pipe serving a separate solid fuel burning appliance.*

This appliance is approved for use with Hearth & Home Technologies DVP or SLP venting systems. Refer to Section 12.A for vent component information and dimensions. Only use listed decorative termination caps/shrouds with Hearth & Home Technologies approved venting systems.

DO NOT mix pipe, fittings or joining methods from different manufacturers.

The pipe is tested to be run inside an enclosed wall. There is no requirement for inspection openings at each joint within the wall.

Approved Pipe - Flex

WARNING! Risk of Fire or Asphyxiation. *This appliance requires a separate vent.* ***DO NOT*** *vent to a pipe serving a separate solid fuel burning appliance.*

This appliance is approved for use with Hearth & Home Technologies SLP-FLEX (6-5/8 in.) and SLP-FLEX7 (7 inch) venting systems.

DO NOT mix pipe, fittings or joining methods from different manufacturers. SLP-FLEX and SLP-FLEX7

venting cannot be interchanged.

SLP-FLEX (6-5/8 Inch): venting may be used in any venting configuration shown in the venting tables provided that the horizontal vent length is reduce by 25%.

SLP-FLEX7 (7 Inch-Canada Only): venting requires adapter collars to transition from the 6-5/8 in. appliance starting collar and to the 6-5/8" termination cap. Refer to installation instructions included with the SLP-FLEX7 collar adapter (SLP-FLEX7-A). SLP-FLEX7 Series venting is approved for use in Canada only.

SL-9 (NG and Propane) is not approved for use with SLP-FLEX7 venting.

The pipe is tested to be run inside an enclosed wall. There is no requirement for inspection openings at each joint within the wall.

B. Vent Termination Minimum Clearances

⚠ WARNING

Fire Risk.

Maintain vent clearance to combustibles as specified.

- **DO NOT** pack air space with insulation or other materials.

Failure to keep insulation or other materials away from vent pipe could cause overheating and fire.

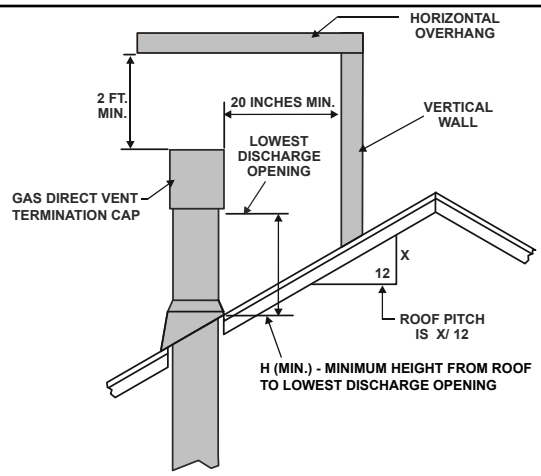

Roof Pitch	H (Min.) Ft
Flat to 6/12	1.0*
Over 6/12 to 7/12	1.25*
Over 7/12 to 8/12	1.5*
Over 8/12 to 9/12	2.0*
Over 9/12 to 10/12	2.5*
Over 10/12 to 11/12	3.25
Over 11/12 to 12/12	4.0
Over 12/12 to 14/12	5.0
Over 14/12 to 16/12	6.0
Over 16/12 to 18/12	7.0
Over 18/12 to 20/12	7.5
Over 20/12 to 21/12	8.0

* H minimum may vary depending on regional snowfall. Refer to local codes.

Figure 4.1 Minimum Height From Roof to Lowest Discharge Opening

A	B
6 in. (minimum) up to 20 in. *152 mm/508 mm*	18 in. minimum *457 mm*
20 in. and over	0 in. minimum

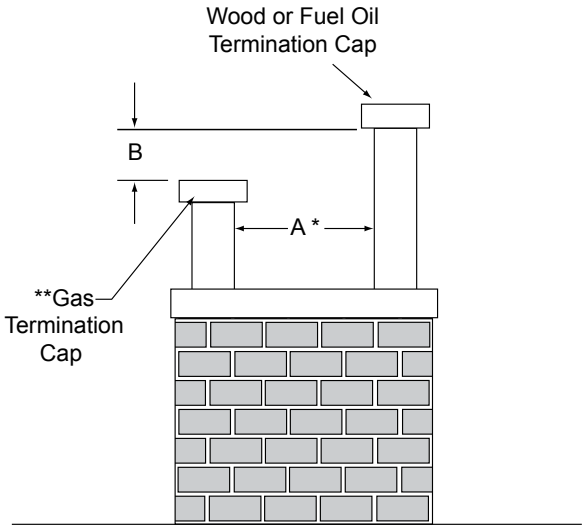

* If using decorative cap cover(s), this distance may need to be increased. Refer to the installation instructions supplied with the decorative cap cover.

** If two gas terminations are present, they may be level (B = 0 inches) provided A is a minimum of 6 inches.

Figure 4.2 Staggered Termination Caps

CAUTION! Risk of Burns! *Termination caps are HOT, consider proximity to doors, traffic areas or where people may pass or gather (sidewalk, deck, patio, etc.). Listed cap shields available. Contact your dealer.*

- Local codes or regulations may require different clearances.
- Hearth & Home Technologies assumes no responsibility for the improper performance of the appliance when the venting system does not meet these requirements.
- Vinyl protection kits are suggested for use with vinyl siding.
- Measure horizontal and vertical termination cap clearances as noted in Figure 4.3 and Figure 4.4.

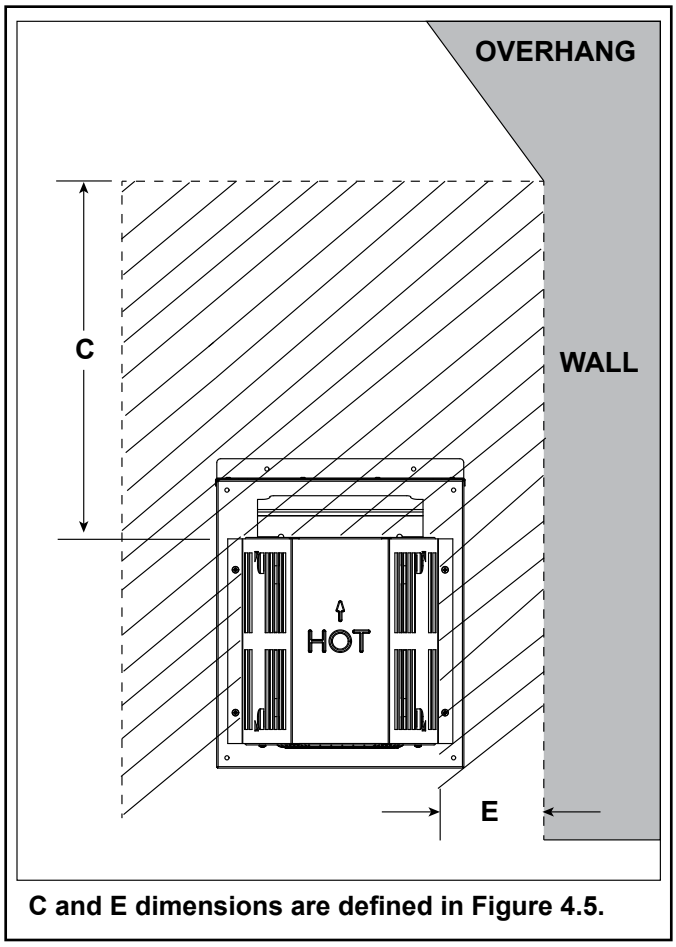

Figure 4.4 Measure Horizontal and Vertical Termination Clearance to Trapezoid Portion of Cap

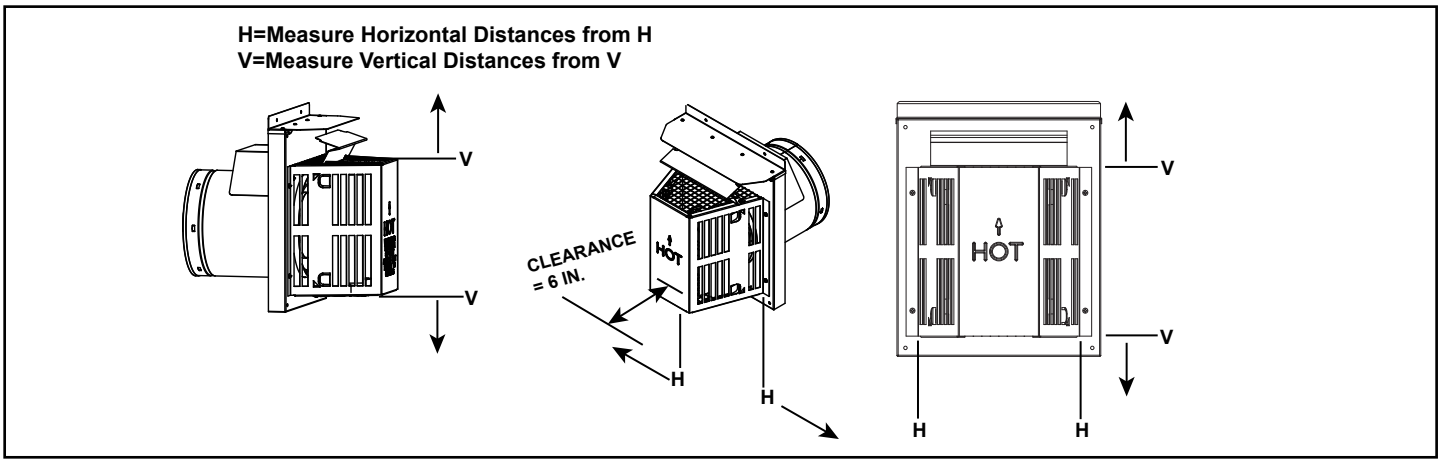

Figure 4.3

C. Vent Terminal Clearances

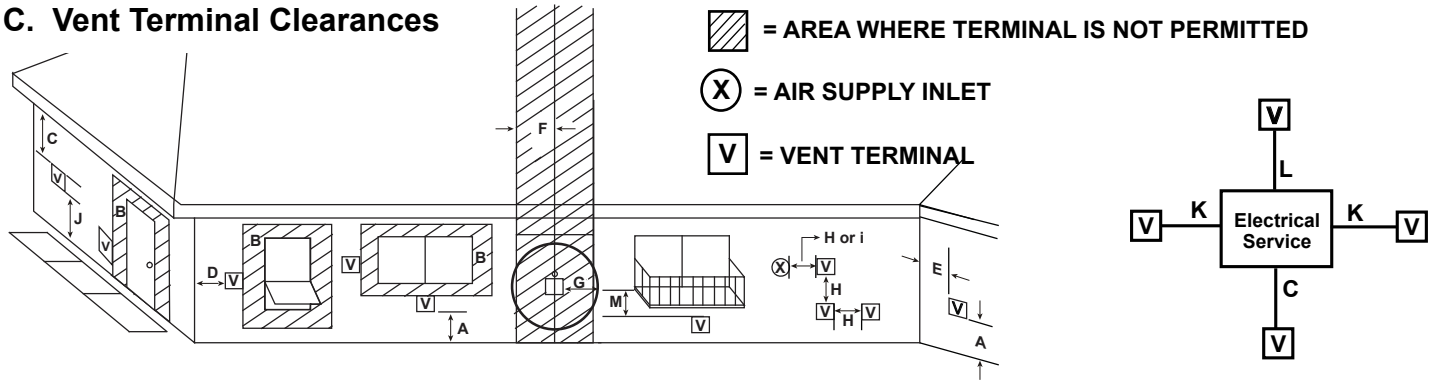

U.S.A. Installations: In accordance with the current ANSI Z223.1/NFPA 54, National Fuel Gas Code.
Canadian Installations: In accordance with the current CSA B149.1, Natural Gas and Propane Installation Code.

		U.S.A.	CANADA
A	clearance above grade,veranda, porch, deck, balcony or roof.	12 in. (305 mm)	12 in. (305 mm)
B	clearance to window or door that may be opened, or to permanently closed window	9 in min. (229 mm min.)	12 in. min. (305 mm min.)
C	clearance below unventilated soffit	18 in. (457 mm)	18 in. (457 mm)
	clearance below ventilated soffit	18 in. (457 mm)	18 in. (457 mm)
	clearance below any vinyl soffits and electrical service	30 in. (762 mm)	30 in. (762 mm)
D	clearance to outside corner	6 in. (152 mm)	6 in. (152 mm)
E	clearance to inside corner	6 in. (152 mm)	6 in. (152 mm)
F	clearance to each side of center line extended above gas meter/regulator assembly	Clearance in accordance with local installation codes and the requirements of the gas supplier.	3 ft (914 mm) within a height 15 ft (4.5 m) above the meter/regulator assembly
G	clearance to gas service regulator vent outlet	3 ft (914 mm)	3 ft (914 mm)
H	clearance to non-mechanical air supply inlet to building or the combustion air inlet to any other appliance termination (mechanical or non-mechanical)	9 in min. (229 mm min.)	12 in. min. (305 mm min.)
I	clearance to a mechanical (powered) air supply inlet ***(All mechanical air intakes within 10 feet of a horizontal termination cap must be a minimum of 3 feet below termination.)	3 ft (914 mm)***	6 ft (1.8 m)
J	On **public** property: clearance above paved sidewalk or a paved driveway.	7 ft (2.1 m)	7 ft (2.1 m)**
	**(A vent shall not terminate directly above a sidewalk or paved driveway which is located between two single family dwellings and serves both dwellings.)		
K	clearance from sides of electrical service	6 in. (152 mm)	6 in. (152 mm)
	Location of the vent termination must not interfere with access to the electrical service.		
L	clearance above electrical service	12 in. (305 mm)	12 in. (305 mm)
	Location of the vent termination must not interfere with access to the electrical service.		
M	clearance under veranda, porch, deck, balcony or overhang *(Permitted only if veranda, porch, deck, or balcony is fully open on a minimum of two sides beneath the floor.)	18 in. (457 mm)	12 in. (305 mm)*
	vinyl or composite overhang	42 in. (1.1 m)	42 in. (1.1 m)

Figure 4.5 Minimum Clearances for Termination

D. Use of Elbows

Diagonal runs have both vertical and horizontal vent aspects when calculating the effects. Use the rise for the vertical aspect and the run for the horizontal aspect. See Figure 4.6.

Two 45º elbows may be used in place of one 90º elbow. On 45º runs, one foot of diagonal is equal to 8-1/2 inch (216 mm) horizontal run and 8-1/2 inch (216 mm) vertical run. A length of straight pipe is allowed between two 45º elbows. See Figure 4.6.

Figure 4.7 shows the vertical and horizontal offsets for DVP or SLP elbows.

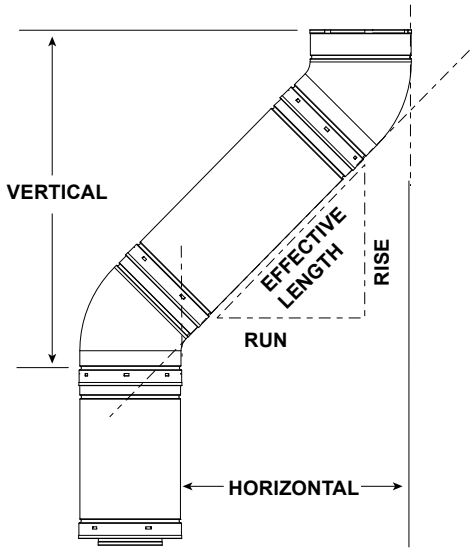

SLP Pipe	Effective Length		Rise/Run	
	Inches	Millimeters	Inches	Millimeters
SLP4	4	102	2-3/4	70
SLP6	6	152	4-1/4	108
SLP12	12	305	8-1/2	216
SLP24	24	610	17	432
SLP36	36	914	25-1/2	648
SLP48	48	1219	34	864
SLP6A	3 to 6	76 to 152	2-1/8-4-1/4	54-108
SLP12A	3 to 12	76 to 305	2-1/8-8-1/2	54-216

DVP Pipe	Effective Length		Rise/Run	
	Inches	Millimeters	Inches	Millimeters
DVP4	4	102	2-3/4	70
DVP6	6	152	4-1/4	108
DVP12	12	305	8-1/2	216
DVP24	24	610	17	432
DVP36	36	914	25-1/2	648
DVP48	48	1219	34	864
DVP6A	3 to 6	76 to 152	2-1/8-4-1/4	54-108
DVP12A	3 to 12	76 to 305	2-1/8-8-1/2	54-216

Figure 4.6

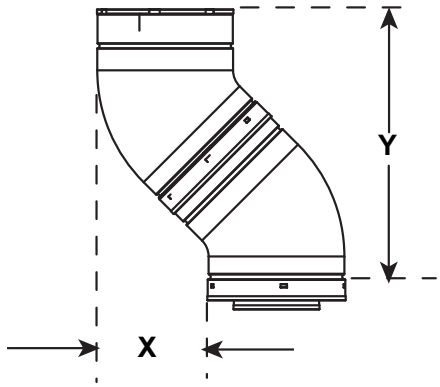

Vent Type	X		Y	
	Inches	Millimeters	Inches	Millimeters
DVP	6-5/8	168	16-1/2	419
SLP	5-1/4	133	11-3/8	289

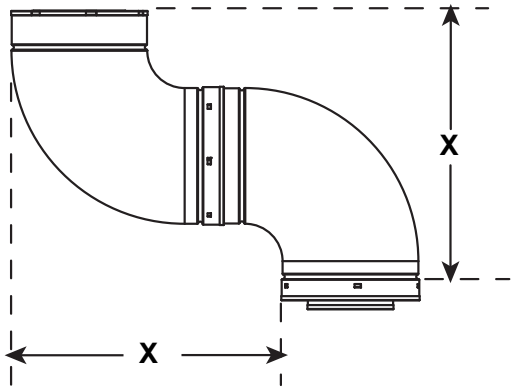

Vent Type	X	
	Inches	Millimeters
DVP	16-1/4	413
SLP	11-1/4	286

Figure 4.7 Vertical and Horizontal Offset for DVP and SLP Elbows

E. Use of Flex Vent (SLP-FLEX Series 6-5/8 Inch)

The flex vent must be supported with the spacing between support intervals not exceeding 4 feet, with no more than 1/2 inch sag between supports.

A support is required at each change in venting direction, and in any location where it is necessary to maintain the necessary clearance to combustibles. A simple “up and out” installation (Figure 4.8) requires only enough support to maintain the necessary clearance to combustibles. However, the vent attachment point and the firestop location are considered to be supports.

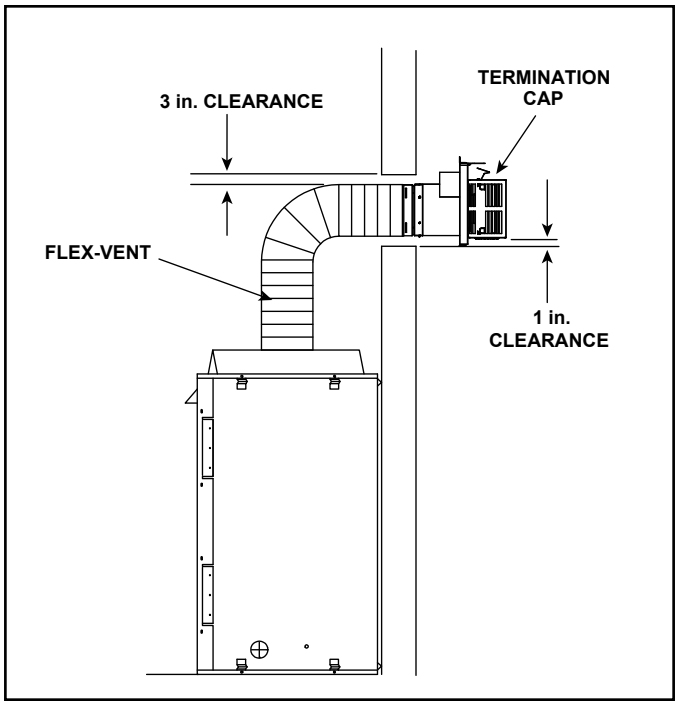

➔ **Figure 4.8 Flex Vent Pipe - Generic Fireplace Shown**

F. Vent Diagrams

General Rules:

- SUBTRACT 3 ft. from the total H measurement for each 90º elbow installed horizontally.
- SUBTRACT 1-1/2 ft. from the total H measurement for each 45º elbow installed horizontally.
- **Rear Vented:** A maximum of three 90º elbows (or six 45º elbows) may be used in any vent configuration. Some elbows may be installed horizontally. See Figure 4.23 and 4.25.
- **Top Vented:** A maximum of four 90º elbows (or eight 45º elbows) may be used in any vent configuration. Some elbows may be installed horizontally. See Figure 4.18.
- Elbows may be placed back to back anywhere in the system.
- Any 90º elbow may be replaced with two back to back 45º elbows.
- When penetrating a combustible wall, a wall shield firestop must be installed.
- When penetrating a combustible ceiling, a ceiling firestop must be installed.
- Horizontal runs of vent do not require vertical rise; horizontal runs may be level.
- Horizontal termination cap should have a 1/4 inch downward slant to allow any moisture in cap to be released. See Figure 4.9.

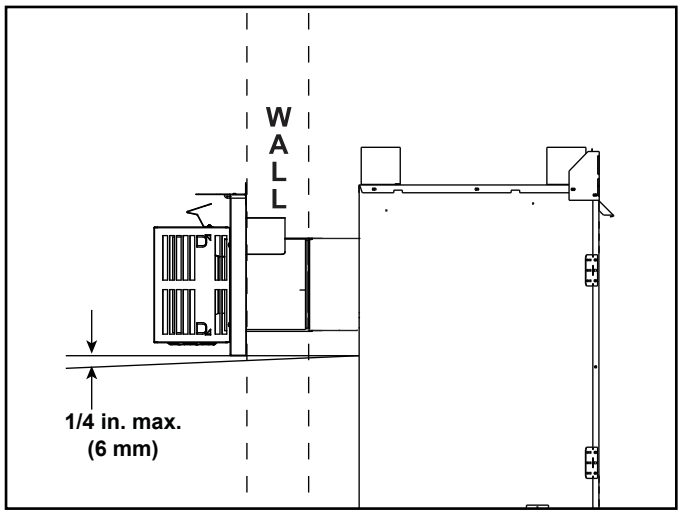

➔ **Figure 4.9**

Measuring Standards:

Vertical and horizontal measurements listed in the vent diagrams and clearances for termination were made using the following standards:

- Pipe measurements are shown using the effective length of pipe. See Section 12.A (Figure 12.1 for DVP, Figure 12.9 for SLP) for information on effective length of pipe components.
- Horizontal terminations are measured to the outside mounting surface (flange of termination cap). See Figure 4.10.
- Vertical terminations are measured to top of last section of pipe. See Figure 4.11.
- Horizontal pipe installed level with no rise.

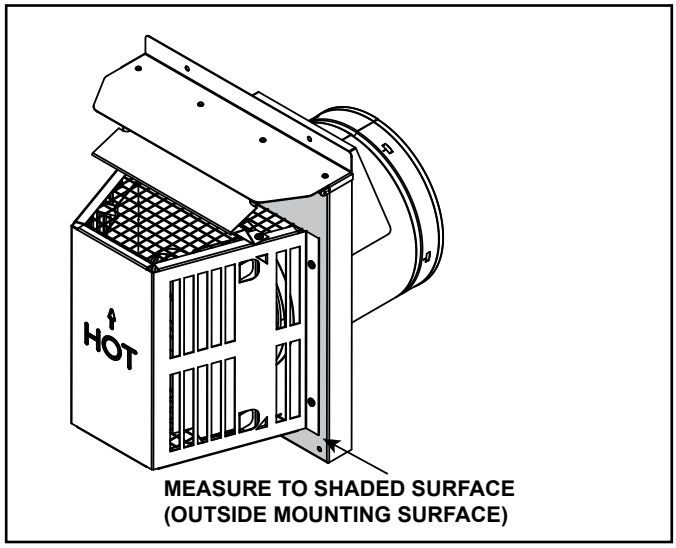

Figure 4.10 Measure to Outside Mounting Surface ←

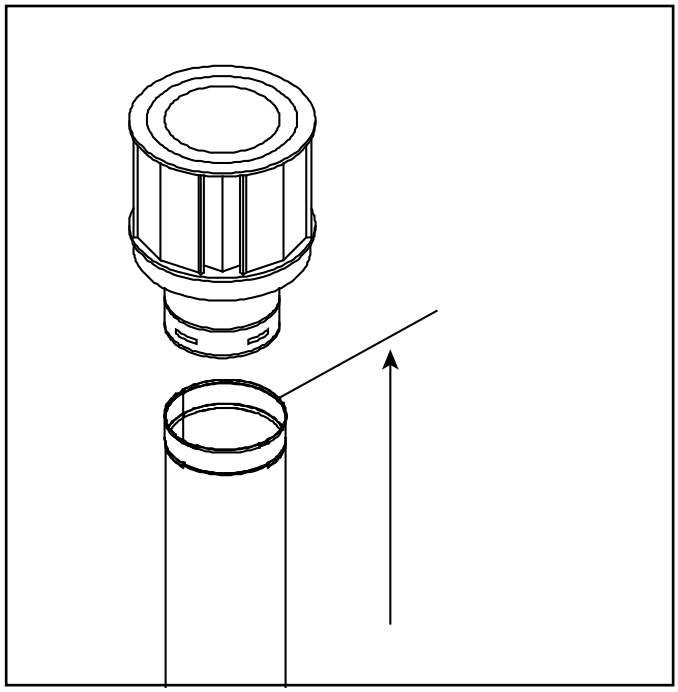

Figure 4.11 Measure to Top of Last Section of Pipe

Top Vent - Horizontal Termination

One Elbow

Note: Use SLP Series components only.

****Note**: When using **SLP-FLEX (6-5/8 in.)** venting, there MUST be a 25% reduction in total H when using flex vent. See Figure 4.8.

V_1 Minimum		H_1 Maximum**	
90 Elbow*		18 in.	457 mm
1/2 ft.*	152 mm	2 ft.	610 mm
1-1/2 ft.	457 mm	3 ft.	914 mm
2-1/2 ft.	762 mm	5 ft.	1.5 m
3-1/2 ft.	1.1 m	7 ft.	2.1 m
4-1/2 ft.	1.4 m	14 ft.	4.3 m
H MAX. =14 ft. (4.3 m) V + H MAX. = 40 ft. (12.2 m) * See warning below			

⚠ WARNING *

Fire Risk.

- When using SLP-HRC-SS termination cap on top vented fireplaces, a one foot minimum vertical vent section is required before installing first elbow.

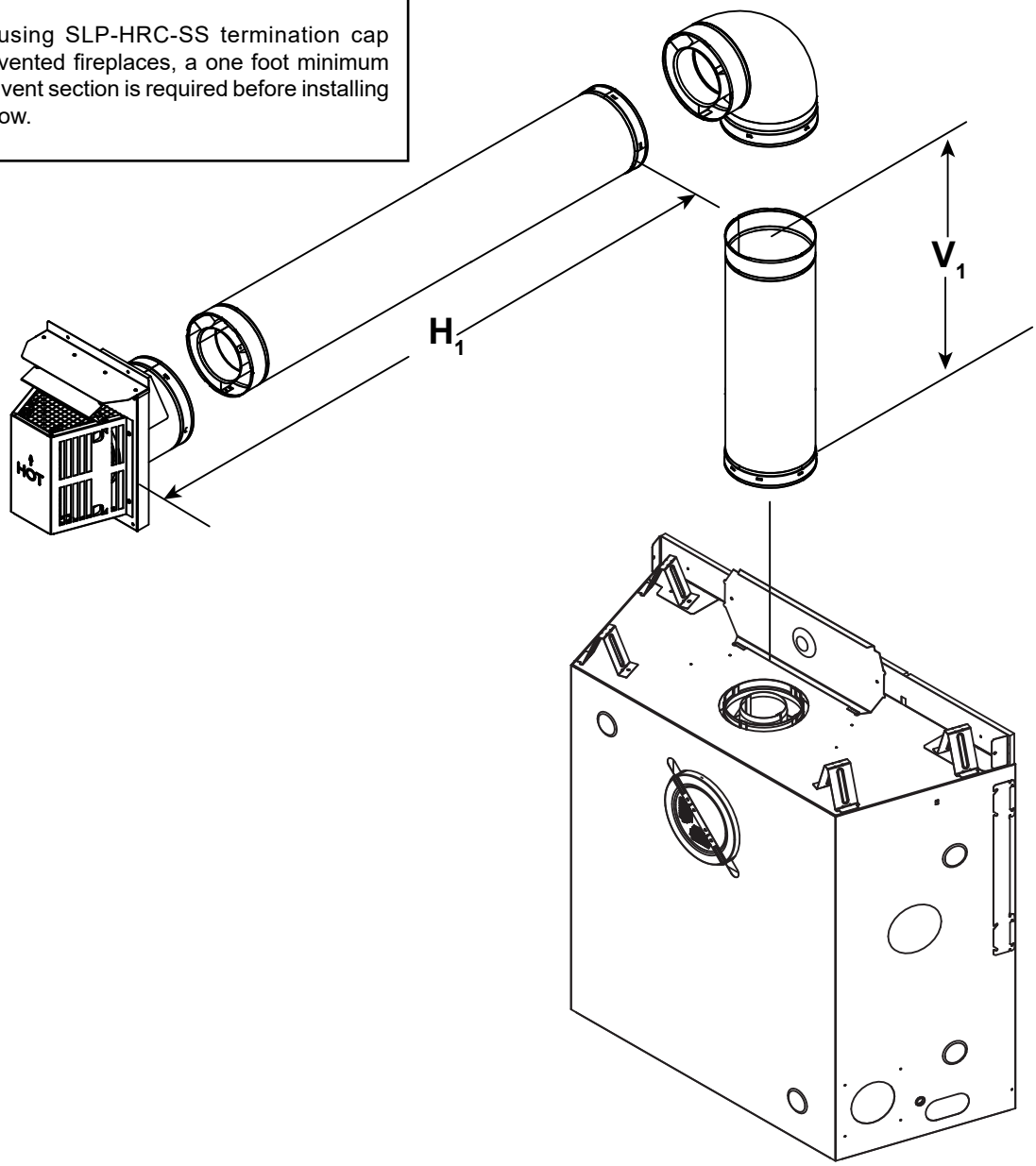

➔ **Figure 4.12**

Two Elbows

Note: Use SLP Series components only.

****Note**: When using **SLP-FLEX (6-5/8 in.)** venting, there MUST be a 25% reduction in total H when using flex vent. See Figure 4.8.

V Minimum		$H_1 + H_2$ Maximum**	
90 Elbow*		1/2 ft.	152 mm
1/2 ft.*	152 mm	1 ft.	305 mm
1-1/2 ft.	457 mm	2 ft.	610 mm
2-1/2 ft.	762 mm	4 ft.	1.2 m
3-1/2 ft.	1.1 m	6 ft.	1.8 m
4-1/2 ft.	1.4 m	14 ft.	4.3 m
$H + H_1$ MAX. =14 ft. (4.3 m) $V + H + H_1$ MAX. = 40 ft. (12.2 m) * See warning below			

⚠ WARNING *

Fire Risk.

- When using SLP-HRC-SS termination cap on top vented fireplaces, a one foot minimum vertical vent section is required before installing first elbow.

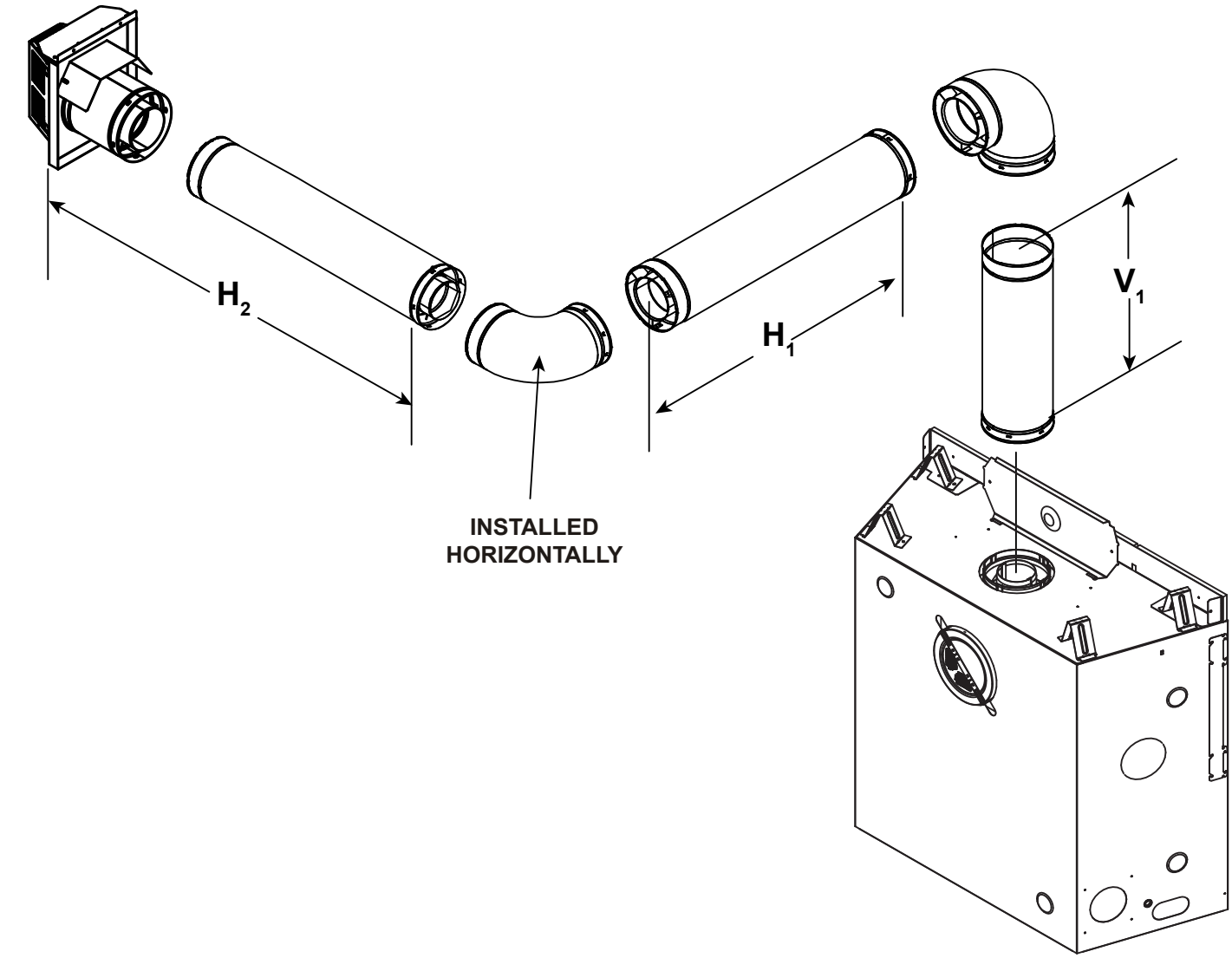

➔ **Figure 4.13**

Note: Use SLP Series components only.

****Note**: When using **SLP-FLEX (6-5/8 in.)** venting, there MUST be a 25% reduction in total H when using flex vent. See Figure 4.8.

V_1 Minimum		$H_1 + H_2$ Maximum**		V_2	$V_1 + V_2$ Min.
90 Elbow*		2 ft.	610 mm	*	*
1/2 ft.*	152 mm	6 ft.	1.8 m	*	*
1-1/2 ft.	457 mm	10 ft.	3.0 m	*	*
2-1/2 ft.	762 mm	12 ft.	3.7 m	*	*
3-1/2 ft.	1.1 m	14 ft.	4.3 m	*	*

$H_1 + H_2$ MAX. =14 ft. (4.3 m)
$V_1 + V_2 + H_1 + H_2$ MAX. = 40 ft. (12.2 m)

*No specific restrictions on this value EXCEPT $V_1 + V_2 + H$ cannot exceed 40 ft. (12.2 m)

* See warning below

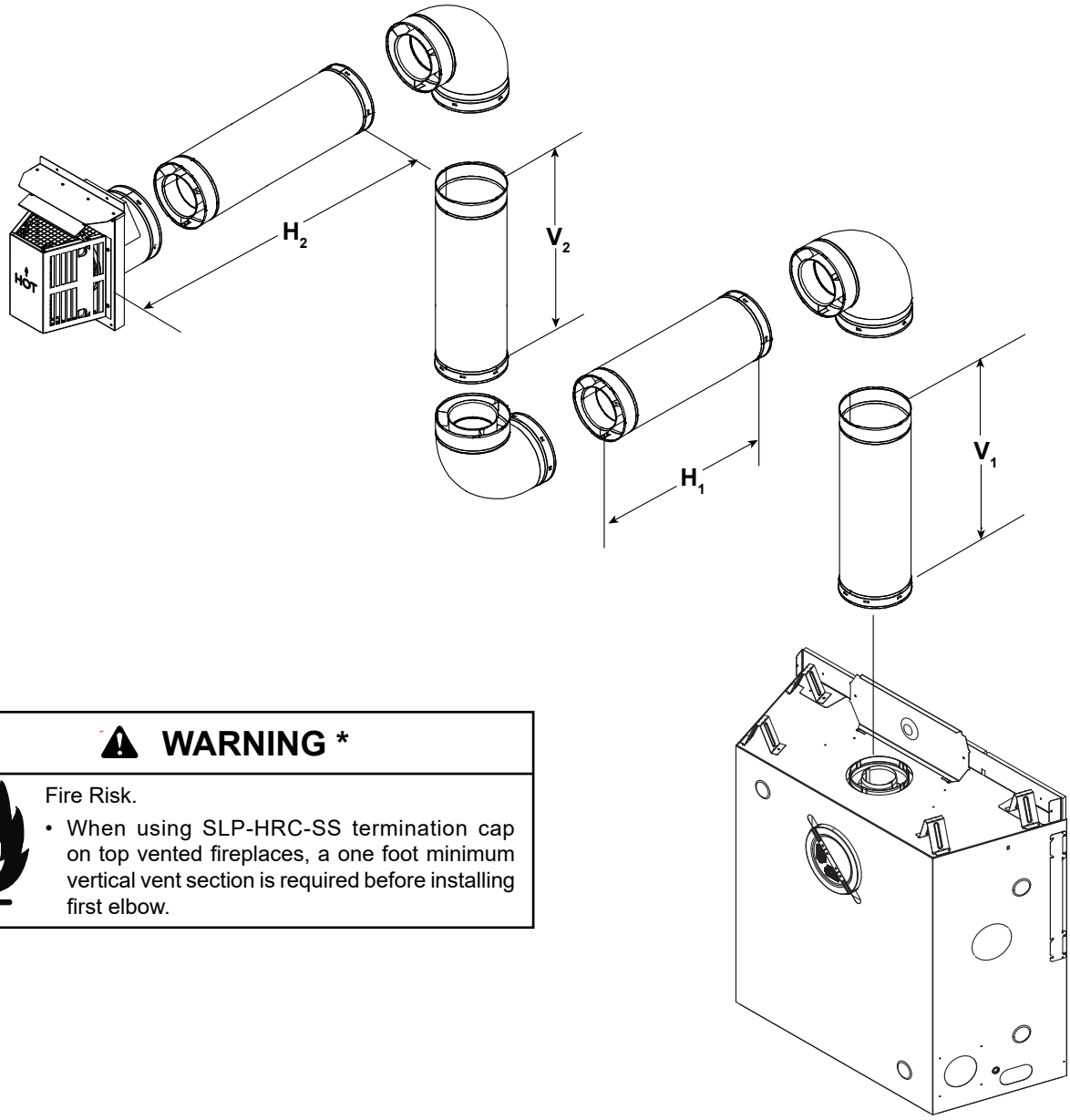

⚠ WARNING *

Fire Risk.

- When using SLP-HRC-SS termination cap on top vented fireplaces, a one foot minimum vertical vent section is required before installing first elbow.

➔ **Figure 4.14**

Top Vent - Vertical Termination

No Elbow

Note: Use SLP Series components only.

Note: If installing a vertical vent/termination off the top of the appliance, the optional vertical termination baffle may be needed.

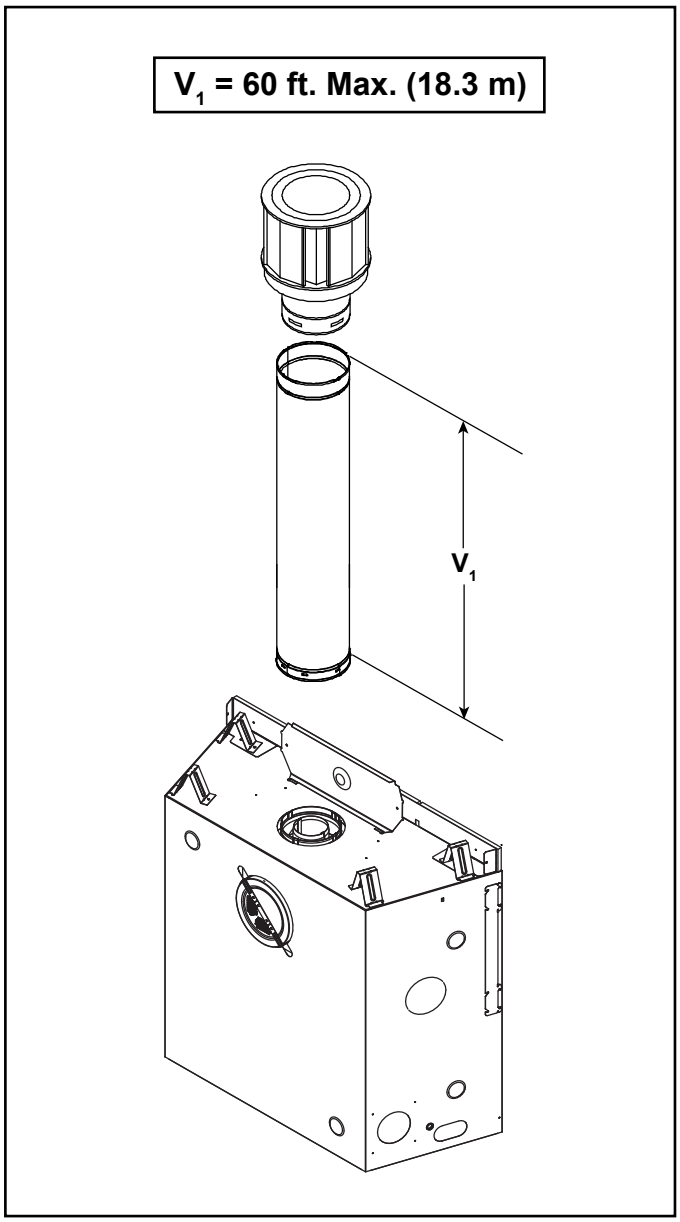

Figure 4.15

Exhaust restrictor Instructions

Exhaust restrictors are recommended for these vertically terminated products which have excessive draft. Exhaust restrictors will compensate for high draft, and restore visual flame height. If the vent configuration has a total vertical of 15-60 feet, an exhaust restrictor may be used. The exhaust restrictor can be located in the appliance manual bag.

1. Install the exhaust restrictor over the center of the exhaust outlet in the firebox. See Figure 4.16.
2. Center the exhaust restrictor in the open end of the exhaust outlet and secure through the slots on the exhaust restrictor with the two 1/4 in. self-tapping screws provided in the appliance manual bag.

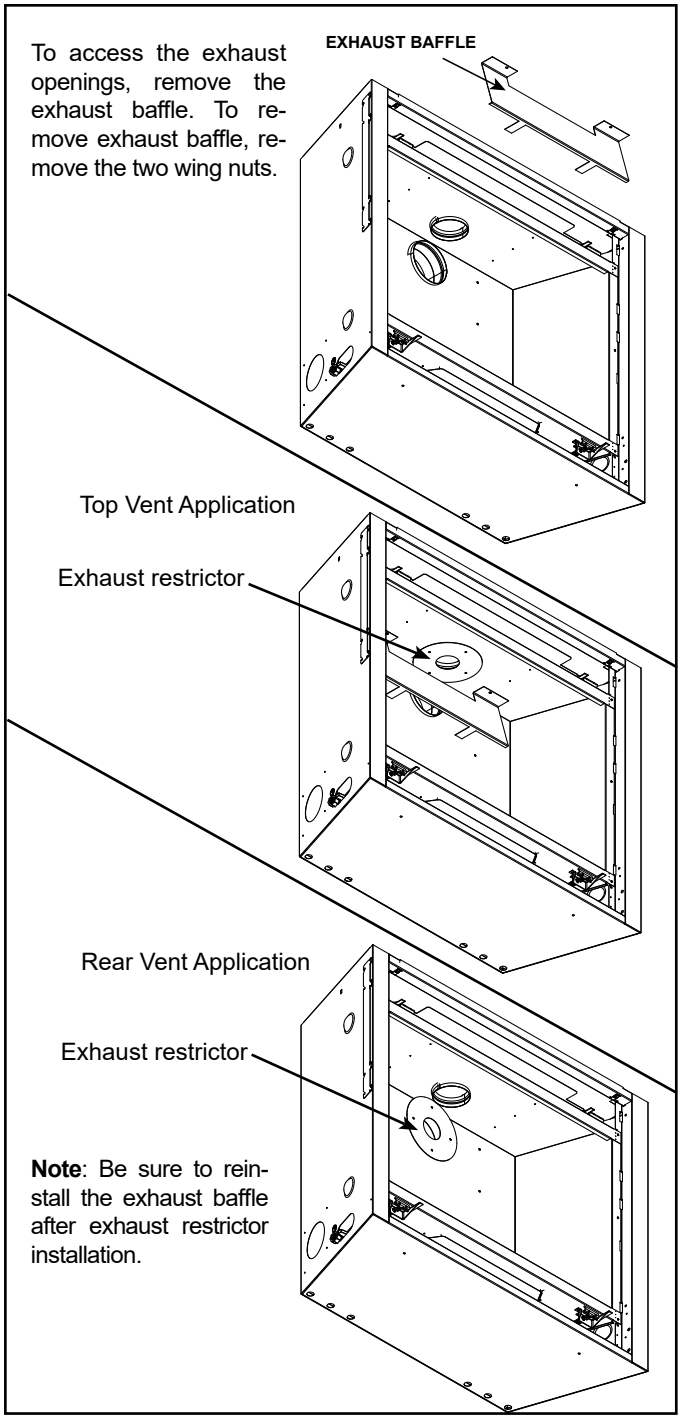

Figure 4.16

Top Vent - Vertical Termination - (continued)

Two 90º Elbows

Note: Use SLP Series components only.

****Note**: When using **SLP-FLEX (6-5/8 in.)** venting, there MUST be a 25% reduction in total H when using flex vent. See Figure 4.8.

V_1 MIN.		H MAX.**		V_2	$V_1 + V_2$ MIN.
90 Elbow		1-1/2 ft.	457 mm	*	*
1/2 ft.	152 mm	2 ft.	610 mm	*	*
1-1/2 ft.	457 mm	3 ft.	914 mm	*	*
2-1/2 ft.	762 mm	5 ft.	1.5 m	*	*
3-1/2 ft.	1.1 m	7 ft.	2.1 m	*	*
4-1/2 ft.	1.4 m	15 ft.	4.6 m	*	*
H MAX. =15 ft. (4.6 m) $V_1 + V_2$ + H MAX. = 40 ft. (12.2 m) * No specific restrictions on this value EXCEPT $V_1 + V_2$ + H cannot exceed 40 ft. (12.2 m)					

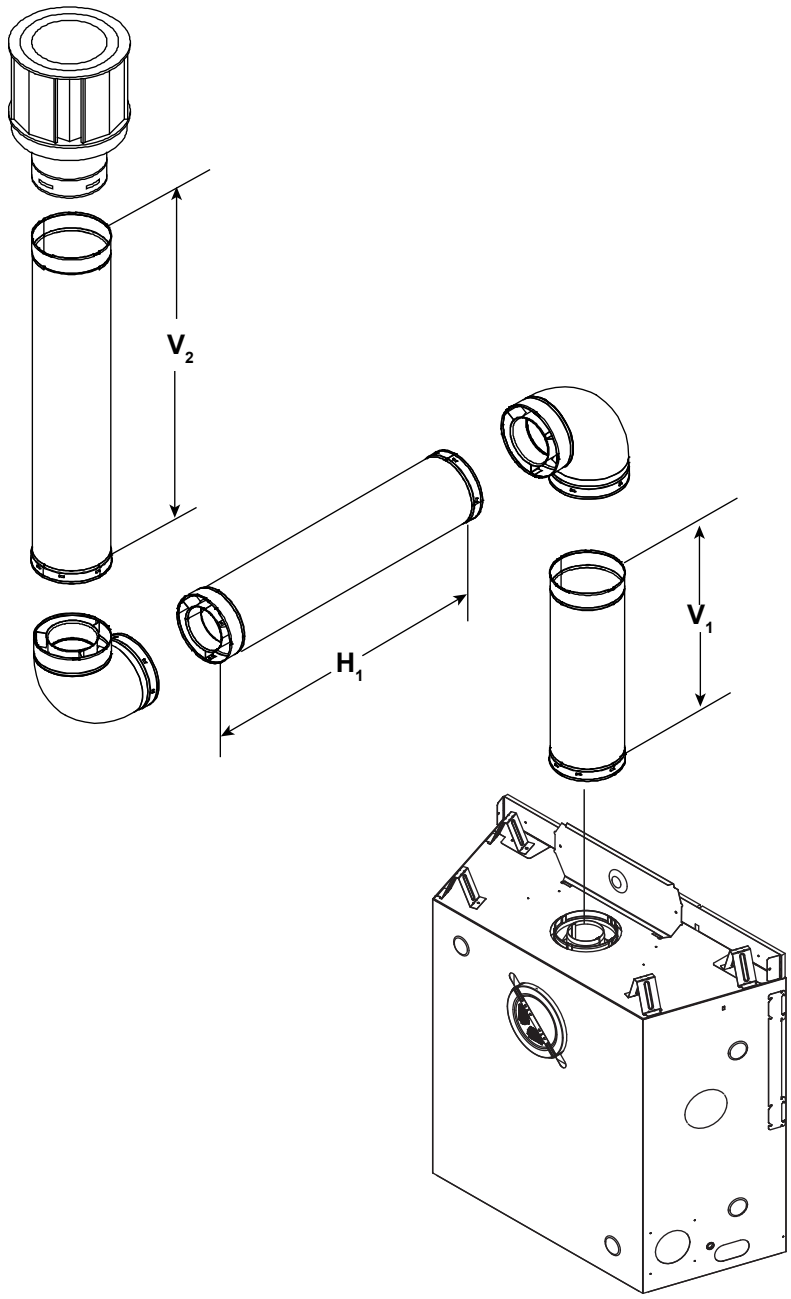

Figure 4.17

Top Vent - Vertical Termination - (continued)

Three Elbows

Note: Use SLP Series components only.

****Note**: When using **SLP-FLEX (6-5/8 in.)** venting, there MUST be a 25% reduction in total H when using flex vent. See Figure 4.8.

V_1 MIN.		H MAX.**		V_2	$V_1 + V_2$ MIN.
90 Elbow		1/2 ft.	152 mm	*	*
1/2 ft.	152 mm	1 ft.	305 mm	*	*
1-1/2 ft.	457 mm	2 ft.	610 mm	*	*
2-1/2 ft.	762 mm	4 ft.	1.2 m	*	*
3-1/2 ft.	1.1 m	6 ft.	1.8 m	*	*
4-1/2 ft.	1.4 m	14 ft.	4.3 m	*	*
H MAX. =14 ft. (4.3 m) $V_1 + V_2 + H_1 + H_2$ MAX. = 40 ft. (12.2 m) * No specific restrictions on this value EXCEPT $V_1 + V_2 + H_1 + H_2$ cannot exceed 40 ft. (12.2 m)					

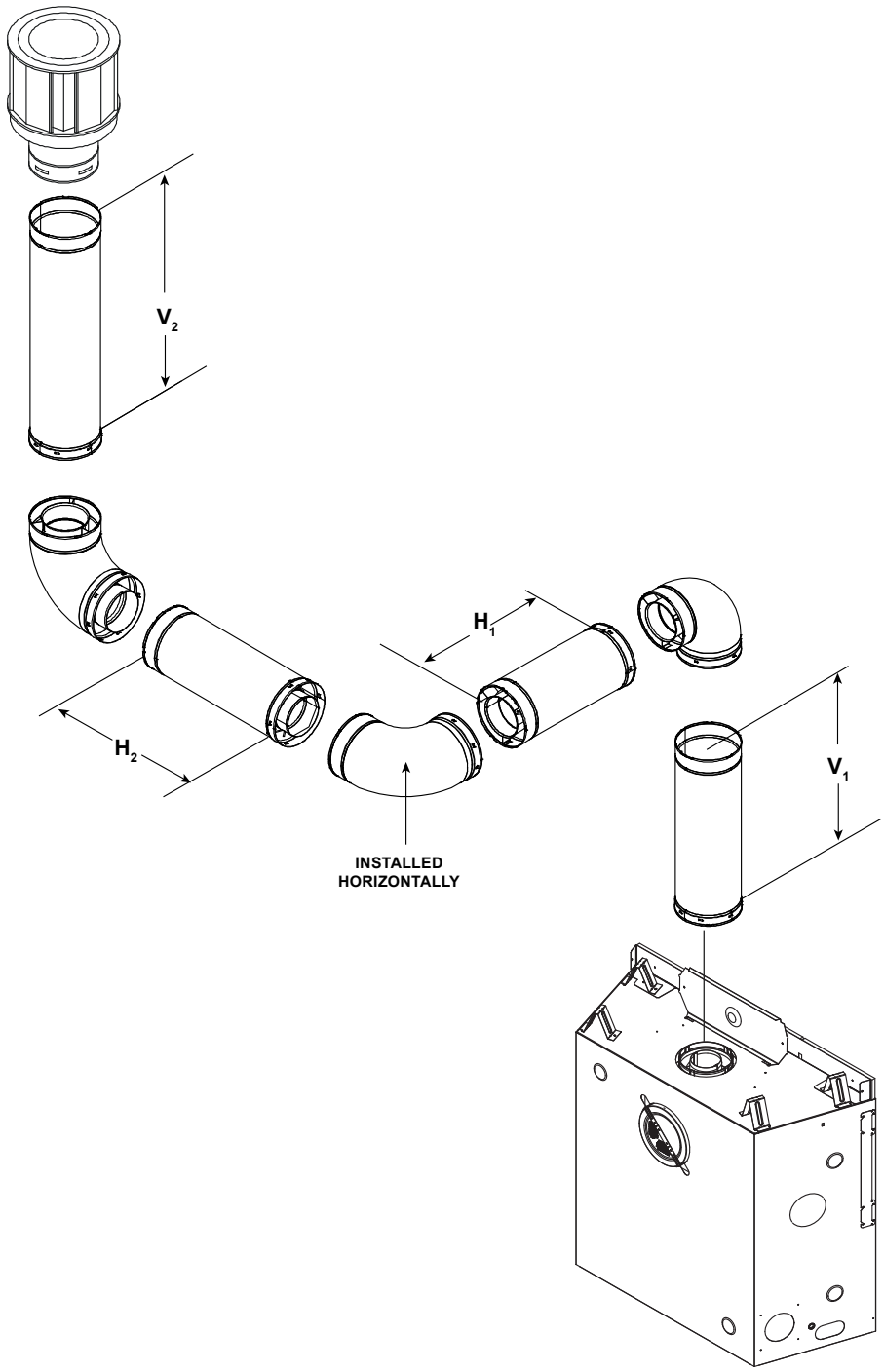

Figure 4.18

Top Vent - Vertical Termination - (continued)

Four 90º Elbows

Note: Use SLP Series components only.

V_1 Min.		H_1 Max.**		V_2 Min.		H_2 Max.**		V_3 Min.	
1-1/2 ft.	457 mm	4 ft.	1.2 m	4 ft.	1.2 m	4 ft.	1.2 m	3-1/2 ft.	1.0 m
$V_1 + V_2 + V_3 + H_1 + H_2$ Maximum= 40 ft. (12.2 m)									

****Note**: When using **SLP-FLEX (6-5/8 in.)** venting, there MUST be a 25% reduction in total H when using flex vent. See Figure 4.8.

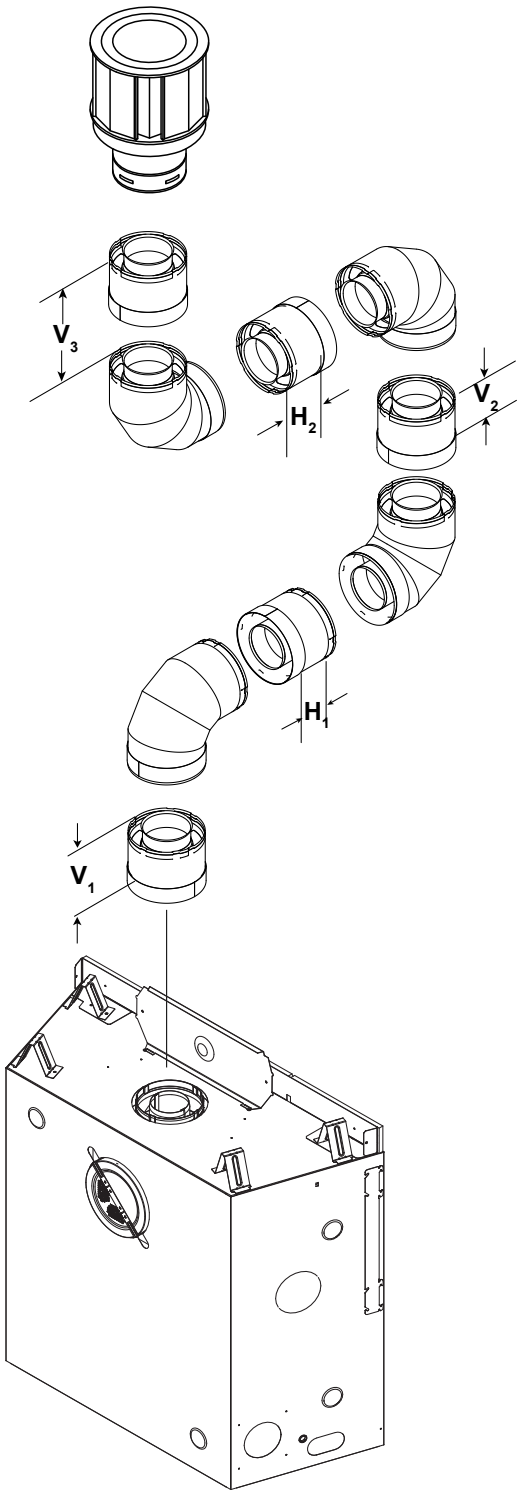

Figure 4.19

Rear Vent - Horizontal Termination

No Elbow

Note: Use DVP Series components only.

H_1 MAX	
24 in.	610 mm

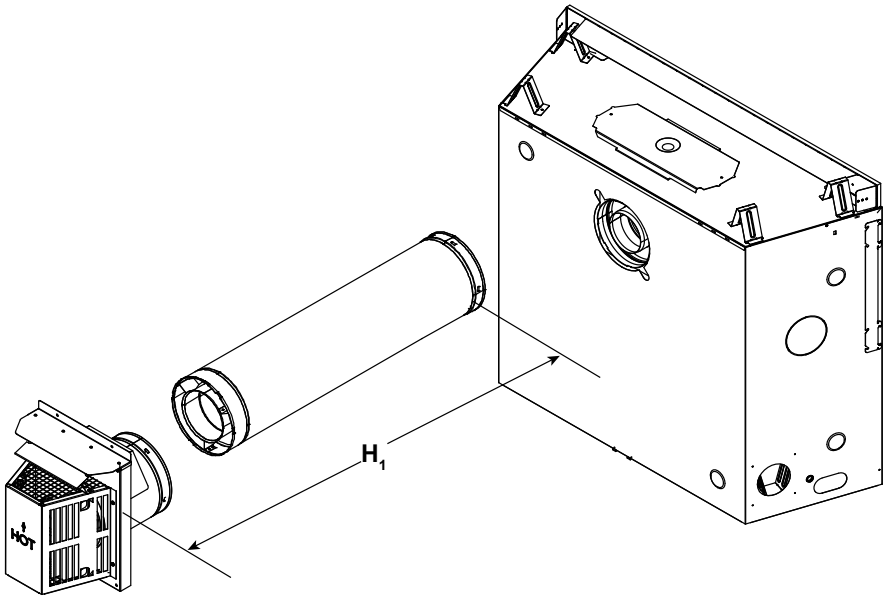

➔ **Figure 4.20**

Rear Vent - Horizontal Termination
One 45º Elbow

H_1 = 9 in. (229 mm) Maximum

For corner installation of models **QUARTZ32IFT** and **QUARTZ36IFT** ONLY

Note: Use DVP Series components only.

Note: Do not use a 45º elbow for QUARTZ42IFT. Use two 90º elbows for corner installation on QUARTZ42IFT.

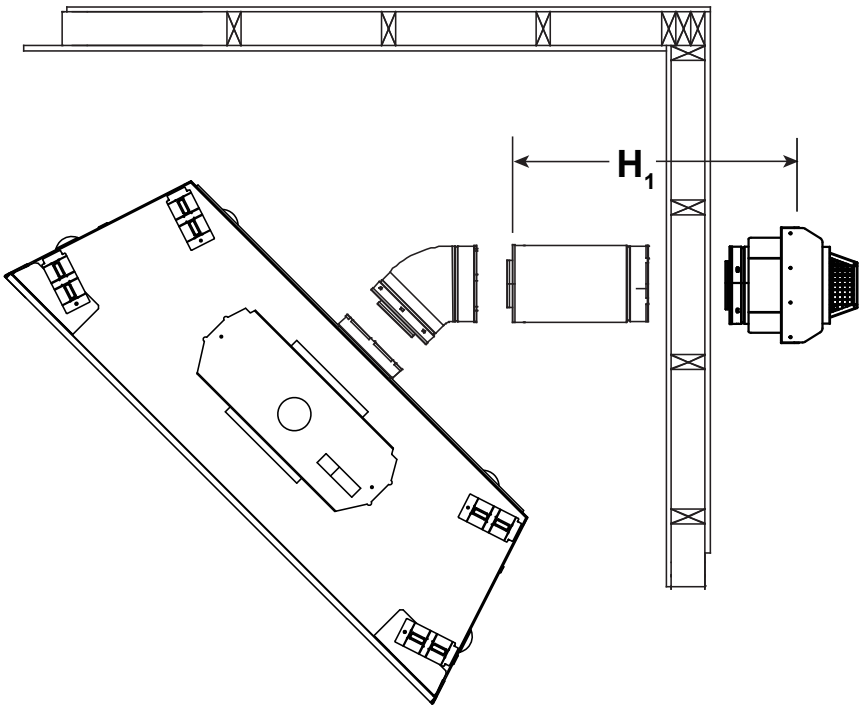

➔ **Figure 4.21**

Two Elbows

Note: Use DVP Series components only.

H_1 MAX.		V_1 MIN.		H_2 MAX.		$H_1 + H_2$ MAX.	
1-1/2 ft.	457 mm	Back to back elbows		1 ft.	305 mm	2-1/2 ft.	762 mm
3 ft.	914 mm	1 ft.	305 mm	3 ft.	914 mm	6 ft.	1.8 m
5 ft.	1.5 m	3 ft.	914 mm	5 ft.	1.5 m	10 ft.	3.0 m
7 ft.	2.1 m	5 ft.	1.5 m	7 ft.	2.1 m	14 ft.	4.3 m
H_1 MAX. = 7 ft. (2.1 m) $H_1 + H_2$ MAX. = 14 ft. (4.3 m) $V_1 + H_1 + H_2$ MAX. = 40 ft. (12.2 m)							

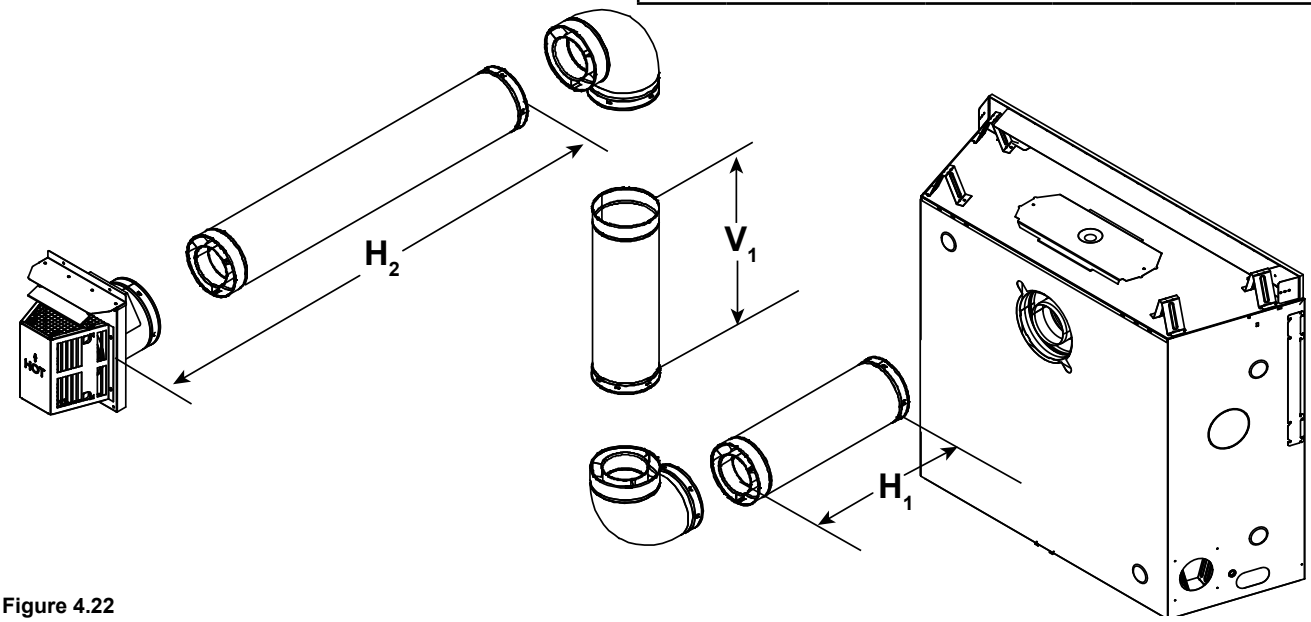

➔ **Figure 4.22**

Three Elbows

Note: Use DVP Series components only.

H_1 MAX.		V_1 MIN.		$H_2 + H_3$ MAX.		$H_1 + H_2 + H_3$ MAX.	
1-1/2 ft.	457 mm	Back to back elbows		1 ft.	305 mm	2-1/2 ft.	762 mm
3-1/2 ft.	1.1 m	1 ft.	305 mm	2 ft.	610 mm	5-1/2 ft.	1.7 m
5-1/2 ft.	1.7 m	2 ft.	610 mm	4 ft.	1.2 m	9-1/2ft.	2.9 m
7-1/2 ft.	2.3 m	3 ft.	914 mm	6 ft.	1.8 m	13-1/2 ft.	4.1 m
H_1 MAX. = 7-1/2 ft. (2.3 m) $H_1 + H_2 + H_3$ MAX. = 13-1/2 ft. (4.1 m) $V_1 + H_1 + H_2 + H_3$ MAX. = 40 ft. (12.2 m)							

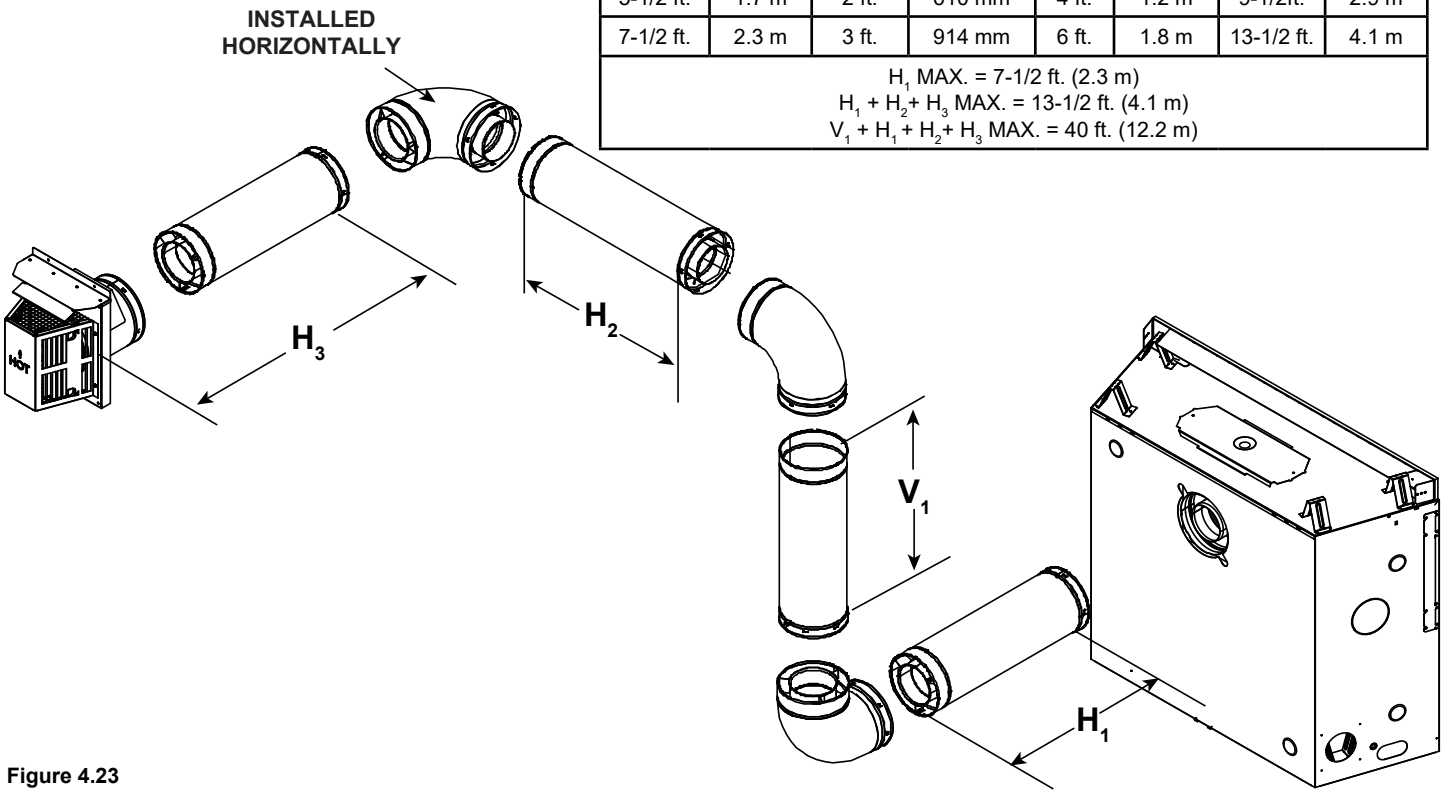

➔ **Figure 4.23**

Rear Vent - Vertical Termination

One Elbow

Note: Use DVP Series components only.

V_1 MIN.		H_1 MAX.	
1 ft.	305 mm	3-1/2 ft.	1.1 m
2 ft.	610 mm	5-1/2 ft.	1.7 m
3 ft.	914 mm	7-1/2 ft.	2.3 m
H MAX. = 7-1/2 ft. (2.3 m) $V_1 + H_1$ MAX. = 40 ft. (12.2 m)			

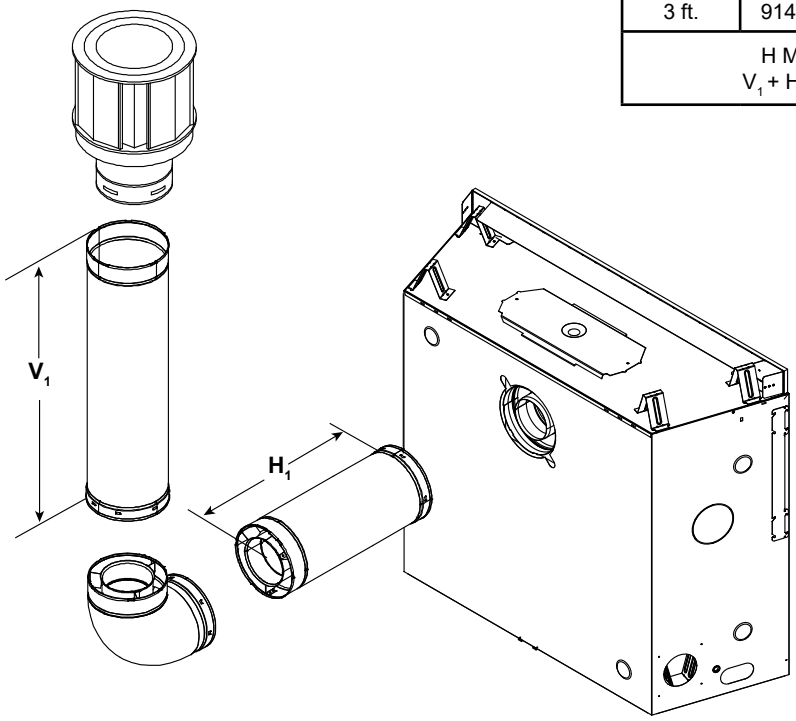

Figure 4.24

Two Elbows

Note: Use DVP Series components only.

$H_1 + H_2$ MAX		V_1 MIN.	
1/2 ft.	152 mm	Back to back elbows	
2-1/2 ft.	762 mm	1 ft.	305 mm
4-1/2 ft.	1.4 m	2 ft.	610 mm
6-1/2 ft.	2.0 m	3 ft.	914 mm
H MAX. = 6-1/2 ft. (2 m) V + H+ H_1 MAX. = 40 ft. (12.2 m)			

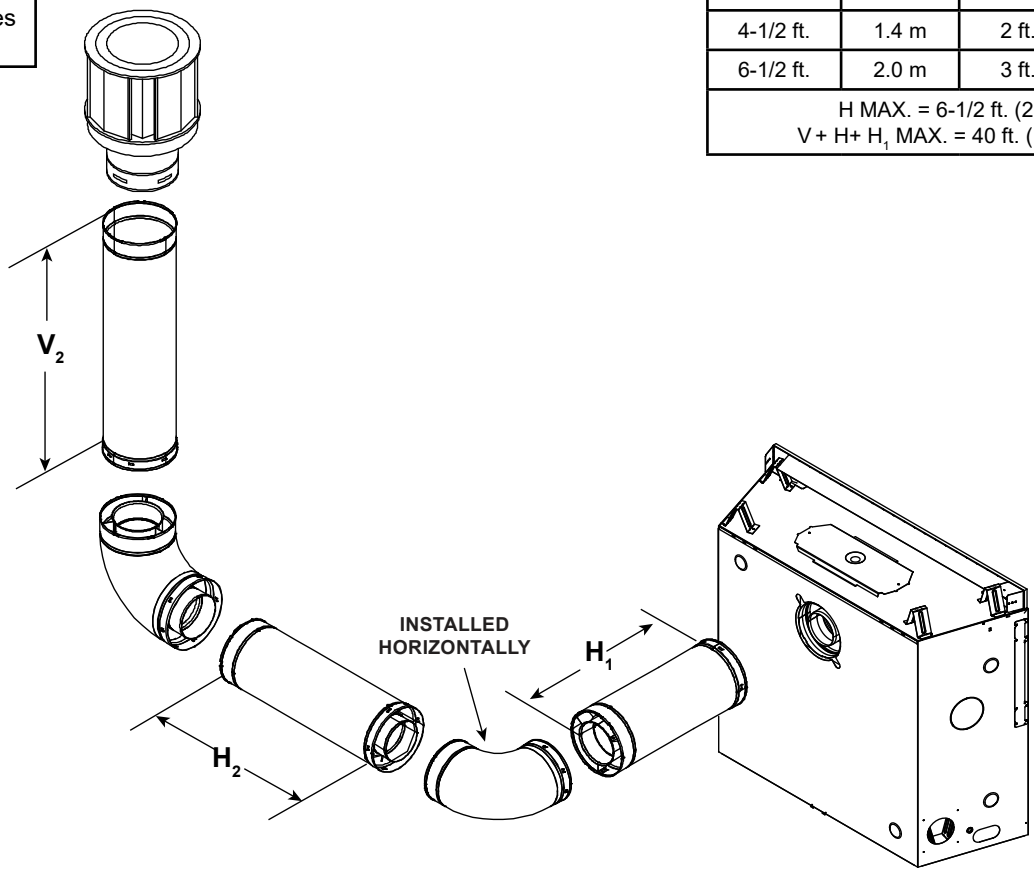

Figure 4.25

Three Elbows

Note: Use DVP Series components only.

H_1 Maximum		V_1 Minimum		H_2 Maximum		$H_1 + H_2$ Maximum	
1-1/2 ft.	457 mm	Back to Back Elbows		1 ft.	305 mm	2-1/2 ft.	762 mm
3-1/2 ft.	1.1 m	1 ft.	305 mm	3 ft.	914 mm	6-1/2 ft.	2.0 m
5-1/2 ft.	1.2 m	2 ft.	610 mm	5 ft.	1.5 m	10-1/2 ft.	3.2 m
7-1/2 ft.	2.3 m	3 ft.	914 mm	7 ft.	2.1 m	14-1/2 ft.	4.4 m
H_1 Maximum = 7-1/2 ft. (2.3 m) $V_1 + V_2 + H_1 + H_2$ Maximum = 40 ft. (12.2 m)							

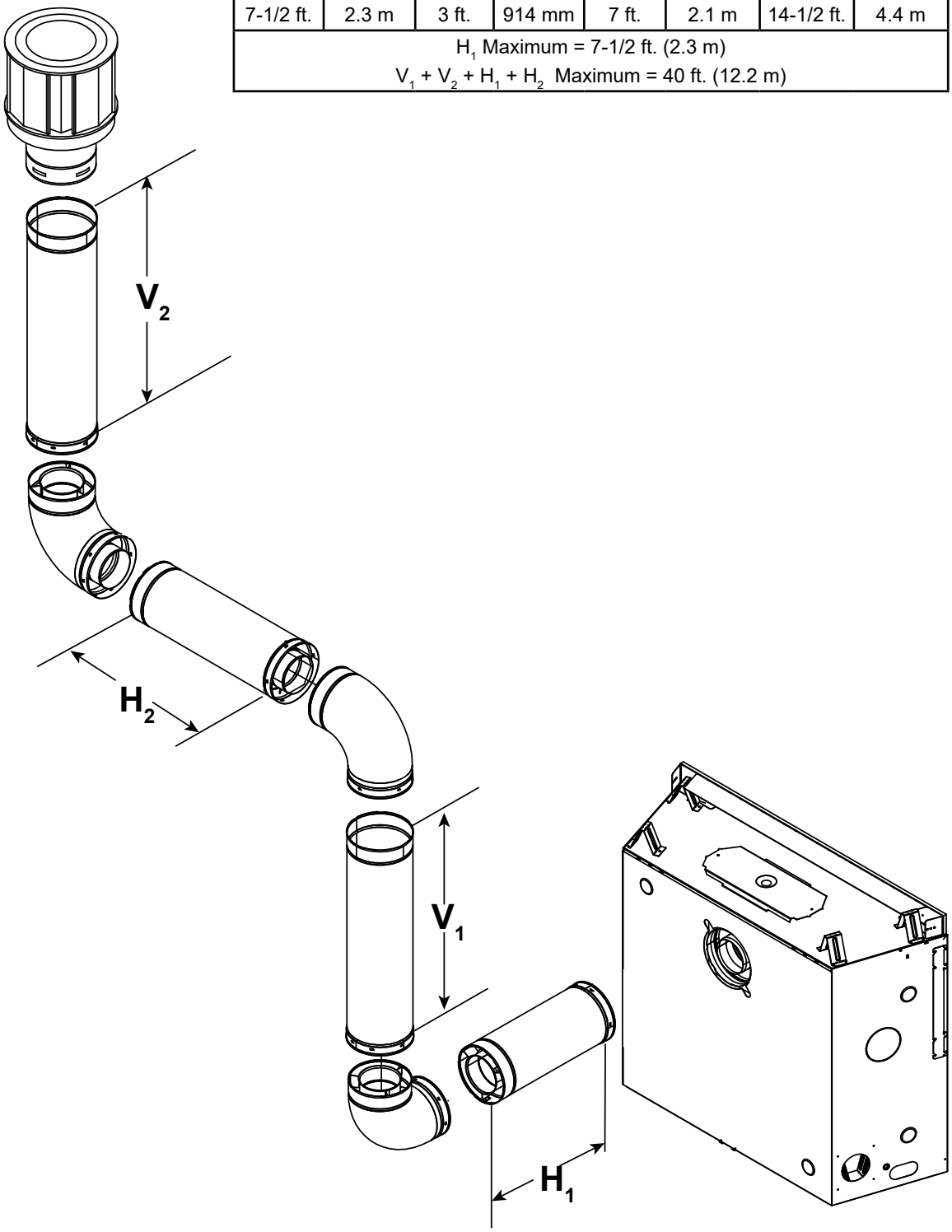

Figure 4.26

Coaxial to Colinear Venting

WARNING! Risk of Fire! *Coaxial to colinear venting configuration may only be used in existing non-combustible chimney. Installation in any other venting application could cause fire.*

The coaxial to colinear adapter (DV-46DVA-GCL) is approved for installations into solid fuel masonry or factory built fireplaces that have been installed in accordance with the National, Provincial, State and local building codes. The coaxial to colinear vent components are shown in Section 12.A. The DV-46DVA-GCL must be recessed into existing masonry fireplace. See Table 1 and Figure 4.27.

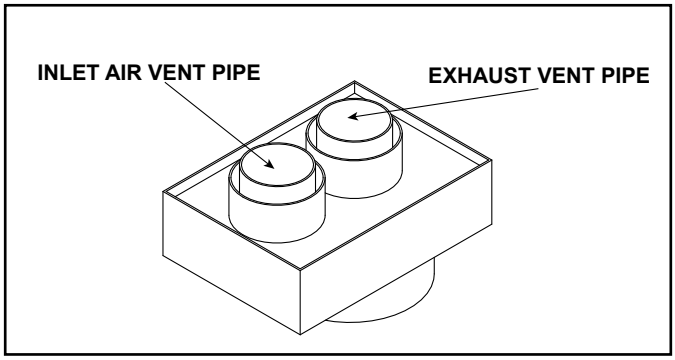

Figure 4.27 Coaxial/Colinear Appliance Connector

Prior to installing the gas appliance:

- Have the chimney and adjacent structure inspected and cleaned by qualified professionals. Hearth & Home Technologies recommends that NFI or CSIA certified professionals, or technicians under the direction of certified professionals, conduct a minimum of a NFPA 211 Level 2 inspection of the chimney.
- Replace component parts of the chimney and fireplace as specified by the professionals.
- Ensure all joints are properly engaged and the chimney is properly secured.

Table 1

CLEARANCE TO COMBUSTIBLES REQUIREMENTS	
DV-46DVA-GCL	3 IN.
Exhaust Vent Pipe	5 IN.

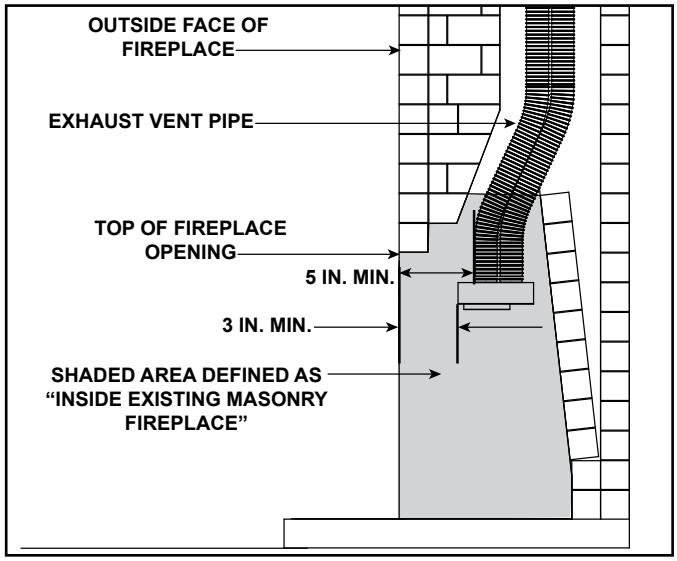

Figure 4.28 Existing Fireplace DV-46DVA-GCL Clearance Requirements

Clearances to Combustibles:

Refer to Section 3 and Section 10 for clearances to the appliance, mantel, mantel legs and wall projection.

Refer to Section 5 for pipe clearances to combustibles.

Termination Cap

For installation of termination cap see minimum vent heights for various pitched roofs. See Section 4.B.

Flue Damper

Fully lock the solid fuel fireplace's flue damper in the open position, OR completely remove it.

Venting Components

The LINK-DV30B is approved for use with the coaxial/colinear venting application. The LINK-DV30B kit includes:

- Two 30 foot sections of flexible vent pipe (3 inches Ø). One section is used to draw combustion air and the other section is used to expel exhaust gases.
- One vertical termination cap.

CAUTION! DO NOT use any flue restrictor when venting with the DV-46DVA-GCL adapter and LINK-DV30B kit. *This could result in poor flame appearance, sooting, pilot malfunction, or overheating.*

Connecting the DV-46DVA-GCL Adapter to Appliance

WARNING! Risk of Fire, Explosion or Asphyxiation! *Do NOT connect this gas appliance to a chimney flue serving a separate solid fuel or gas burning appliance.*

- *Could impair safe operation of this appliance or other appliances connected to the flue.*
- *Vent this appliance directly outside.*
- *Use separate vent system for this appliance.*

Top Vent

- Remove top seal cap and insulation if equipped. See Section 6, "Appliance Preparation." Attach the DV-46DVA-GCL adapter to the appliance starting collar with 3-1/2 in. self-tapping screws. See Figure 4.29.

Rear Vent

- Remove the rear seal cap and insulation if equipped. Connect the DVP-2SL adapter to the vertically positioned elbow. Follow installation instructions included with DVP-2SL kit. Secure DV-46DVA-GCL adapter to DVP-2SL with 3-1/2 in. self-tapping screws. See Figure 4.29.

Connecting the LINK-DV30B to the DV-46DVA-GCL adapter

- Insert the two sections of flexible vent pipe down the existing chimney.
- Attach one 3 ft section of stainless steel flex pipe to the exhaust collar on top of the DV-46DVA-GCL adapter with three screws.
- Attach one section of flexible vent pipe to the 3 ft stainless steel flex pipe with three self-tapping screws.
- Attach one section of flexible vent pipe to the inlet collar on top of the DV-46DVA-GCL adapter with three self-tapping screws.
- To minimize cold air drafts, seal around the flex vents at the damper inside the chimney with non-combustible unfaced fiberglass or rock wool insulation.

The DV-46DVA-GCL adapter must be recessed into existing masonry fireplace. This measurement is taken from the top of the fireplace opening. See Table 1 and Figure 4.28.

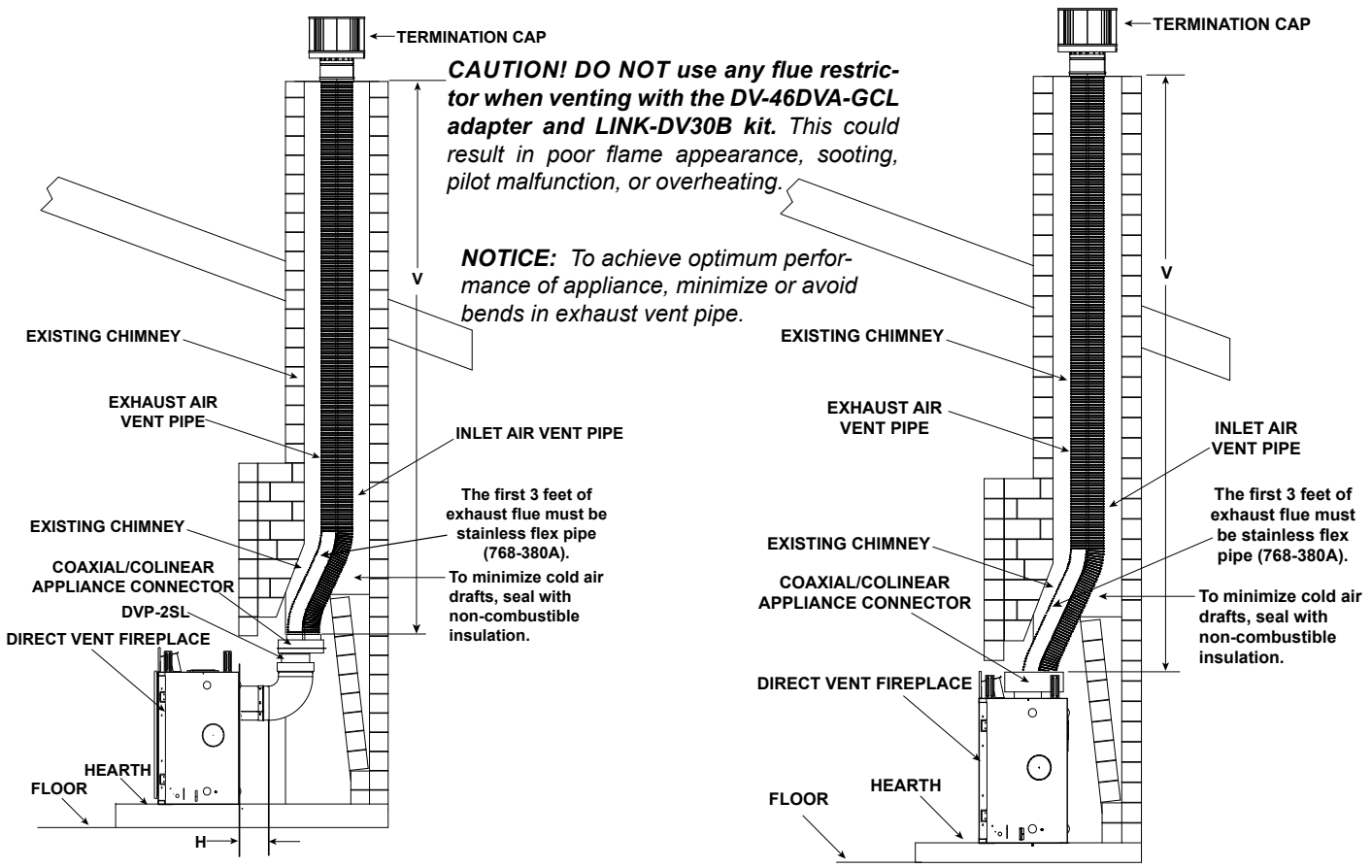

	V		H	
Minimum	10 ft	3.05 m	0 ft	0 mm
Maximum	40 ft	12.2 m	2 ft	610 mm

V		
Minimum	10 ft	3.05 m
Maximum	40 ft	12.2 m

Figure 4.29

5 Vent Clearances and Vent Framing

A. Vent Clearances to Combustibles

WARNING! Risk of Fire! *Maintain air space clearance to vent.* ***DO NOT*** *pack insulation or other combustibles:*

- *Between ceiling firestops*
- *Between wall shield firestops*
- *Around vent system*

Failure to keep insulation or other material away from vent pipe could cause overheating and fire.

Note: Heat shields MUST overlap by a minimum of 1-1/2 in. (38 mm).
- **DVP heat shield** - designed to be used on a wall 4 in. to 7-1/4 in. (102 mm to 184 mm) thick.
- If wall thickness is less than 4 in. the existing heat shields must be field trimmed. If wall thickness is greater than 7-1/4 in. a DVP-HSM-B will be required.
- **SLP heat shield** - designed to be used on a wall 4-3/8 in. to 7-5/8 in. (111 mm to 194 mm thick).
- If wall thickness is less than 4-3/8 the existing heat shields must be field trimmed. If wall thickness is greater than 7-5/8 in. a DVP-HSM-B will be required.

(DVP-SLP Pipe Shown)

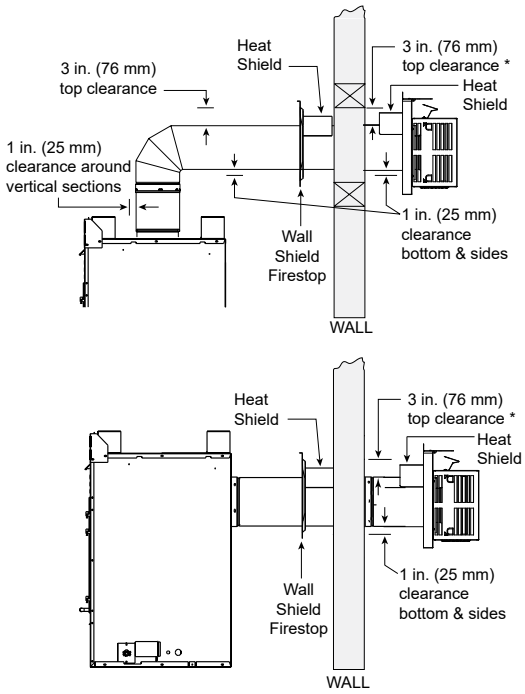

* When using SLP pipe, minimum clearances from the vent pipe to combustible materials at inside wall firestops are:
Top: 2-1/2 in. (64 mm)
Bottom: 1/2 in. (13 mm)
Sides: 1 in. (25 mm)

➔ **Figure 5.1 Horizontal Venting Clearances To Combustible Materials**

B. Wall Penetration Framing/Firestops

Combustible Wall Penetration

Whenever a combustible wall is penetrated, you must frame a hole for the wall shield firestop(s). The wall shield firestop maintains minimum clearances and prevents cold air infiltration.

These clearances are maintained by using an SLP-WS (SLP pipe) or DVP-WS (DVP pipe). See Figure 5.2 for framing instructions.

- For external walls: The wall shield firestop is included with the termination cap assembly.
- For internal walls: A wall shield firestop must be purchased and installed.
- The opening must be framed on all four sides using the same size framing materials as those used in the wall construction.
- SLP pipe - A wall shield firestop must be placed on each side of an interior wall. A minimum 1-1/2 in. (38 mm) overlap of attached heat shields must be maintained.
- DVP pipe - A wall shield firestop is required on one side only on interior walls. If your local inspector requires a wall shield firestop on both sides, then both wall shield firestops must have a heat shield (refer to Section 12.A.) attached to them.
- See Section 7.F. for information for regarding the installation of a horizontal termination cap.

Non-Combustible Wall Penetration

If the hole being penetrated is surrounded by non-combustible materials such as concrete, a hole with diameter one inch greater than the pipe is acceptable.

Whenever a non-combustible wall is penetrated, the wall shield firestop is only required on one side and no heat shield is necessary.

DO NOT PACK VENT FRAMING HOLE WITH INSULATION OR OTHER MATERIAL.

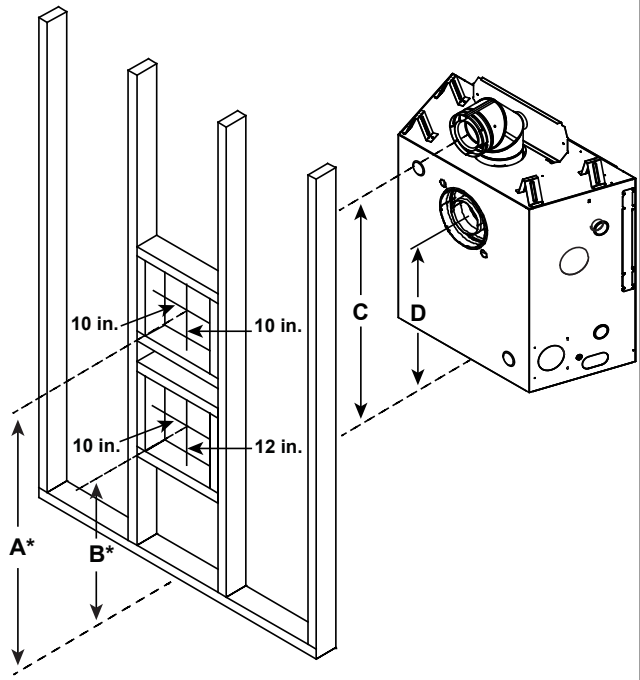

		A*	B*	C	D
QUARTZ32IFT	Inches	37-7/16	24-3/8	36-7/16	23-3/8
	Millimeters	951	619	926	594
QUARTZ36IFT	Inches	41	27-7/8	40	26-7/8
	Millimeters	1041	708	1016	683
QUARTZ42IFT	Inches	43	29-7/8	42	28-7/8
	Millimeters	1092	759	1067	733

* Shows center of vent framing hole for top or rear venting. The center of the hole is one (1) inch (25.4 mm) above the center of the horizontal vent pipe.

Note: Center of the horizontal vent pipe to the vertical measuring surface of a trap cap is 5 inches (127 mm)

Figure 5.2 Wall Penetration

C. Ceiling Firestop/Floor Penetration Framing

WARNING! Risk of Fire! DO NOT pack insulation around the vent. Maintain clearances to vent to prevent overheating.

A ceiling firestop **MUST** be used between floors and attics.

- **DVP pipe only** - Frame an opening 10 in. by 10 in. (254 mm by 254 mm) whenever the vent penetrates a ceiling/floor (see Figure 5.3).
- **SLP pipe only** - Frame opening 9 in. x 9 in. (229 mm x 229 mm) whenever the vent penetrates a ceiling/floor (see Figure 5.3).
- Frame the area with the same sized lumber as used in ceiling/floor joist.
- The ceiling firestop may be installed above or below the ceiling joists when installed with an attic insulation shield. It must be under joists between floors that are not insulated. Refer to Figure 5.4.
- Secure in place with nails or screws.

D. Install Attic Insulation Shield

WARNING! Fire Risk. *The use of an attic shield is required to prevent loose materials or insulation from contacting the vent causing overheating and a fire.*

The International Fuel Gas Code requires an attic shield constructed of 26 gauge minimum steel that extends at least 2 in. (51 mm) above insulation.

- Attic insulation shields must meet specified clearances to combustible materials and be secured in place.
- An attic insulation shield kit is available from Hearth & Home Technologies. Contact your dealer to order. Install attic insulation shield according to instructions included with kit.

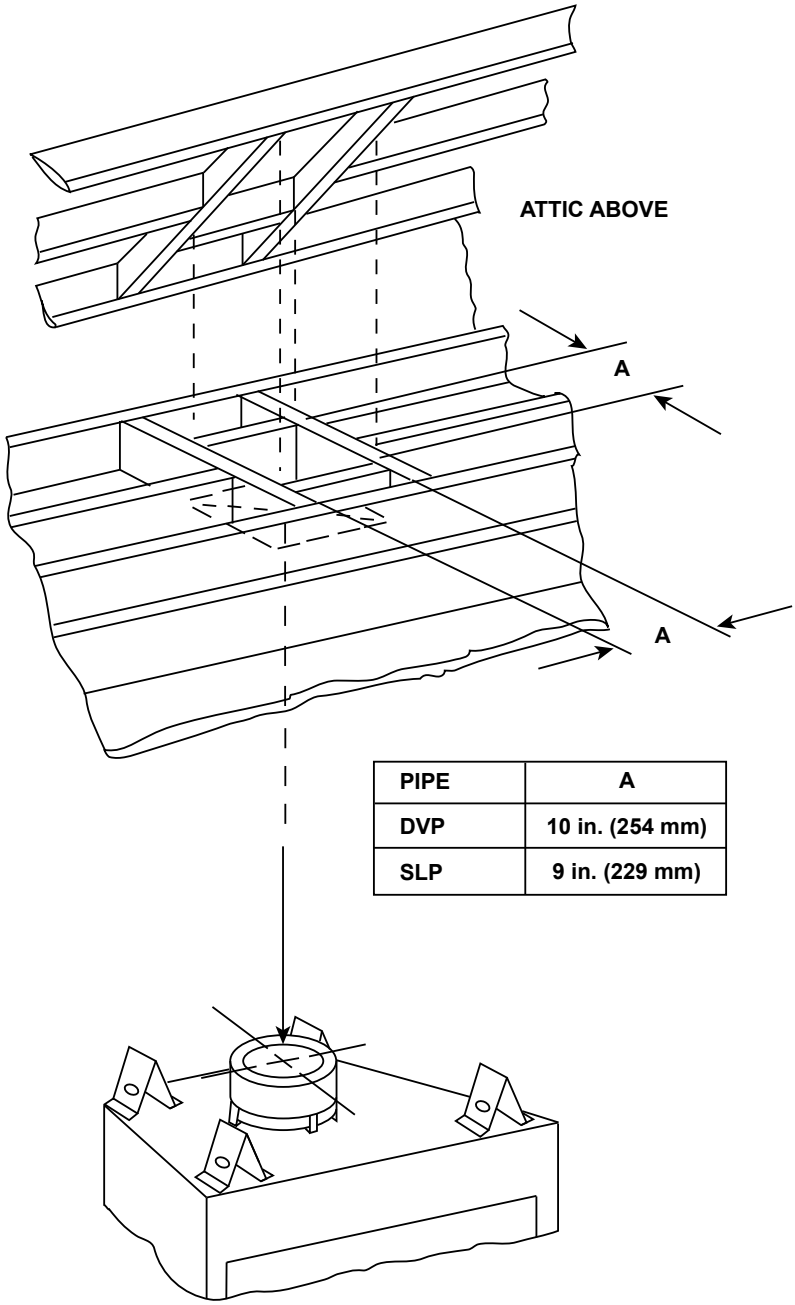

PIPE	A
DVP	10 in. (254 mm)
SLP	9 in. (229 mm)

Figure 5.3 Installing Ceiling Firestop

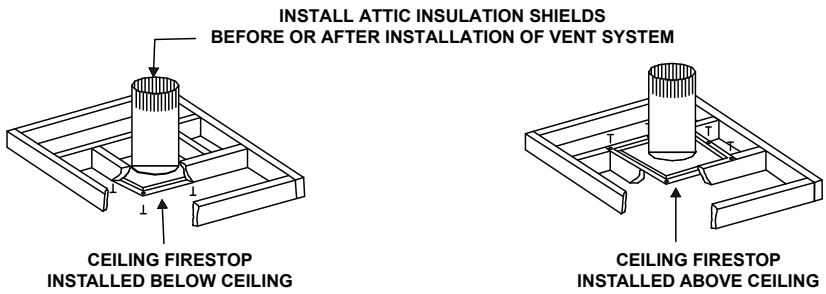

Figure 5.4 Installing the Attic Shield

6 Appliance Preparation

A. Vent Collar Preparation

CAUTION! Risk of Cuts, Abrasions or Flying Debris. *Wear protective gloves and safety glasses during installation. Sheet metal edges are sharp.*

NOTICE: *Once appliance is set up for top or rear venting, it CANNOT be changed at a later time.*

Note: Actual fireplace may look different than the fireplace shown in this section.

Top Vent

If a straight section of pipe is attached directly to the appliance starting collar, the elbow heat shield is not required. When installing a 90 degree elbow (SLP90) directly to the top of the appliance starting collar, the following additional provisions MUST be followed:

1. The elbow heat shield is not required if combustible materials, or combustible chases, are installed a minimum of 15 inches above the top of the appliance.
2. If the combustible materials are to be installed between 12 to 15 inches above the top of the appliance, the elbow heat shield is required. See Figure 6.2.

Top Vent - SLP-FLEX7 Series:

Top Vent - SLP-FLEX7 Series: (Canada only)

SLP-FLEX7 Series venting is approved for the QUARTZ32IFT and QUARTZ36IFT only. It is not approved for the QUARTZ42IFT.

SLP-FLEX7 Series venting requires a minimum initial vertical requirement (V_1). Refer to the SLP-FLEX7 Series installation instructions for the minimum initial vertical requirements. The following provisions must be followed:

1. The elbow heat shield is not required if combustible materials, or combustible chases, are installed a minimum of 6 inches above the top of the elbow. See Figure 6.2.
2. If the combustible materials are to be installed between 3 inches and 6 inches above the top of the elbow, the elbow heat shield is required. See Figure 6.2.

For approved vent configurations, refer to the installation instructions included with the SLP-FLEX7 collar adapter (SLP-FLEX7-A).

Refer to Section 10.C for additional clearance to combustibles requirements.

Figure 6.1 Elbow Heat Shield (Shown as Shipped)

WARNING! Risk of Fire! *Elbow heat shield must be installed if required. Overheating will occur.*

To Install Elbow Heat Shield:

1. Remove the elbow heat shield from the shipping position, shown in Figure 6.1, by removing screws.

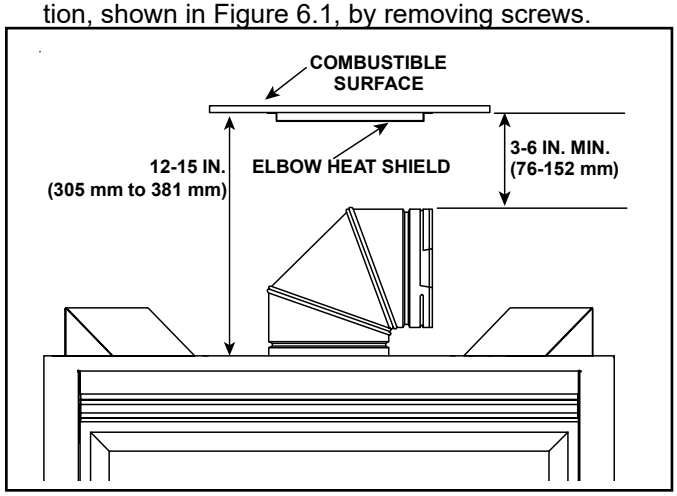

Figure 6.2 Elbow Heat Shield Installation Location

2. Fasten the shield in place using the four pilot holes. The shield should be oriented such that the 13 1/8 inch dimension (longest dimension) is running in the same direction the elbow is pointing. The shield should be centered directly above the elbow, and positioned so that it creates a 1/2 inch airspace between the shield and the combustible surface. See Figure 6.3.

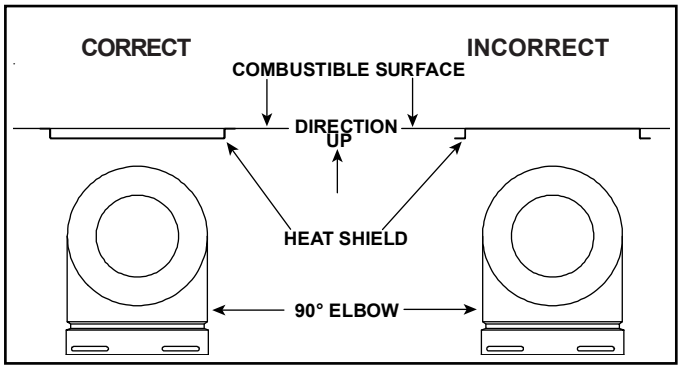

Figure 6.3

- If the combustible materials are not in place at the time of install the elbow heat shield may be screwed to the exhaust pipe. See Figure 6.4. Cut the tabs as shown and bend down. Secure the heat shield to the pipe maintaining 3” to 4” between the pipe and shield.
- Continue adding vent components, locking each succeeding component into place.
- 90° elbows may be installed and rotated to any point around the preceding component’s vertical axis.
- Ensure that each succeeding vent component is securely fitted and locked into the preceding component in the vent system.
- 90° elbows may be installed and rotated to any point around the preceding component’s vertical axis. If an elbow does not end up in a locked position with the preceding component, attach with a minimum of two (2) sheet metal screws.

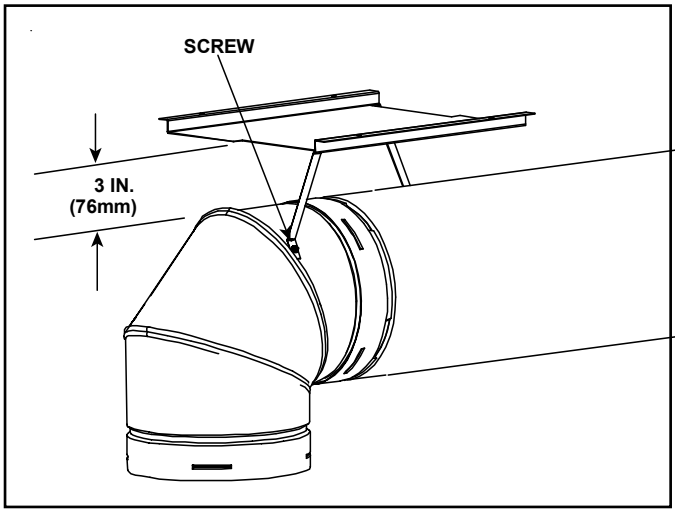

Figure 6.4 Elbow Heat Shield Installed

WARNING! Risk of Fire! *Do not remove heat shield. Elevated header temperatures may cause a fire.*

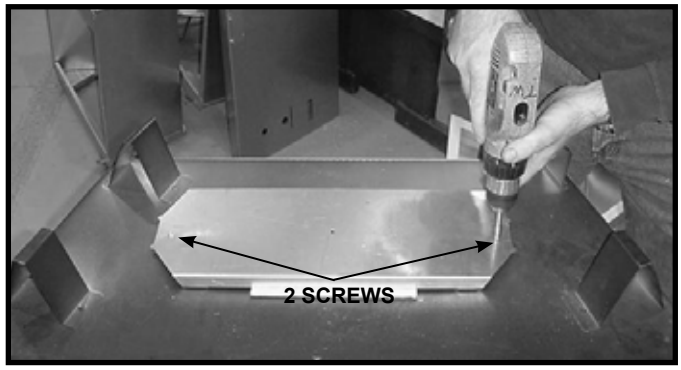

Figure 6.5 For top vent, remove the two screws holding the top heat shield in place. For rear vent, see Figures 6.12-6.16.

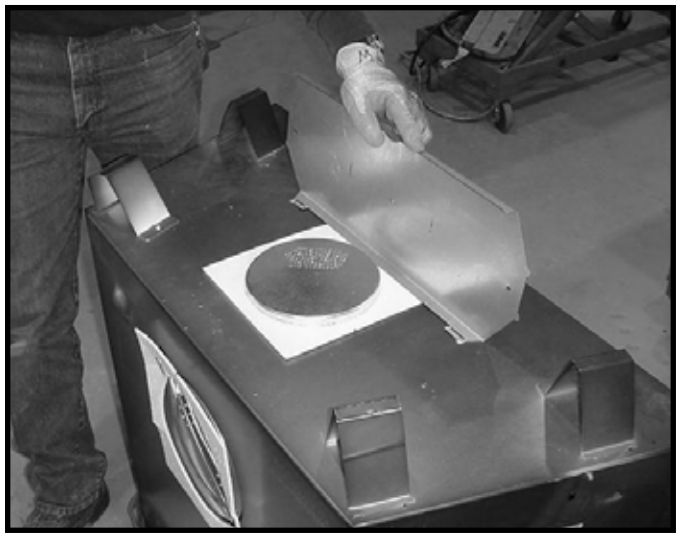

Figure 6.6 Rotate the top heat shield to the vertical position as shown above. The heat shield must remain in the vertical position.

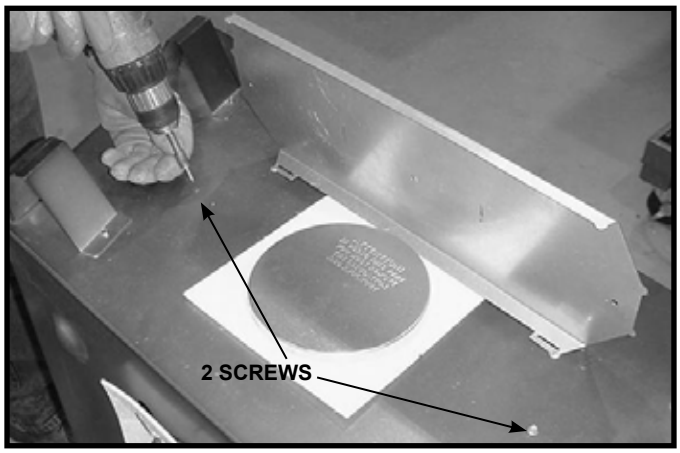

Figure 6.7 Replace the two screws as shown.

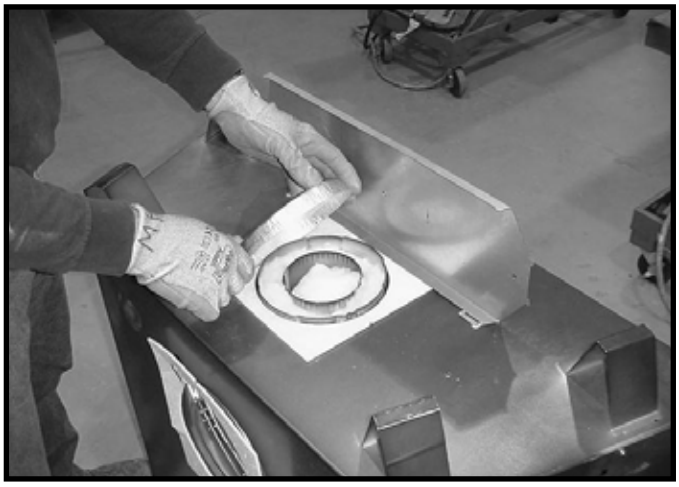

Figure 6.8 Remove the seal cap.

NOTICE: *Once the seal cap has been removed it CANNOT be reattached.*

Figure 6.9 Remove the insulation basket and white insulation from the center vent pipe.

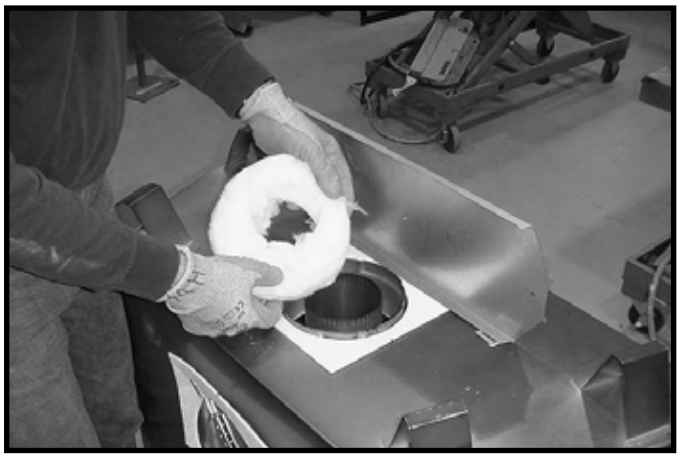

Figure 6.10 Remove the insulation from the outer vent pipe.

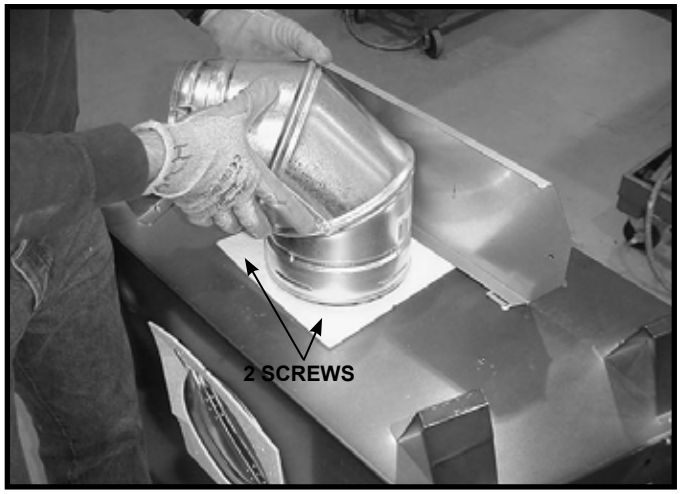

Figure 6.11 To attach the first section of vent pipe, make sure to use the fiberglass gasket to seal between the first vent component and the outer fireplace wrap. Use 2 self tapping screws to secure the gasket to the outer wrap.

Rear Vent

NOTICE: *Once appliance is set up for top or rear venting, it CANNOT be changed at a later time.*

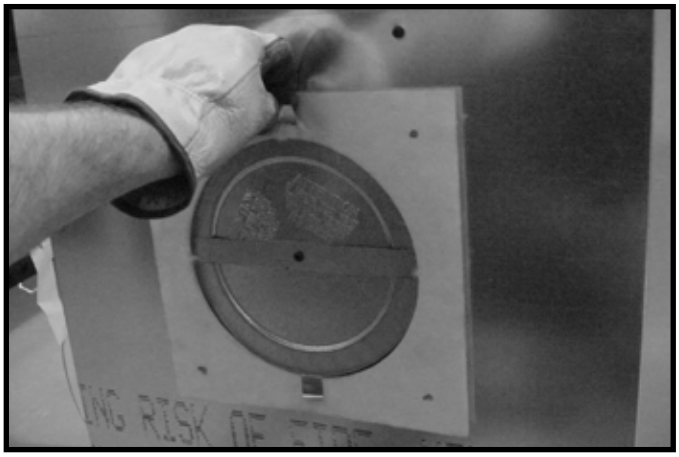

Figure 6.12 (Generic Fireplace Shown) Fold the tabs toward the center of the fire plug (90º) and remove the insulation gasket.

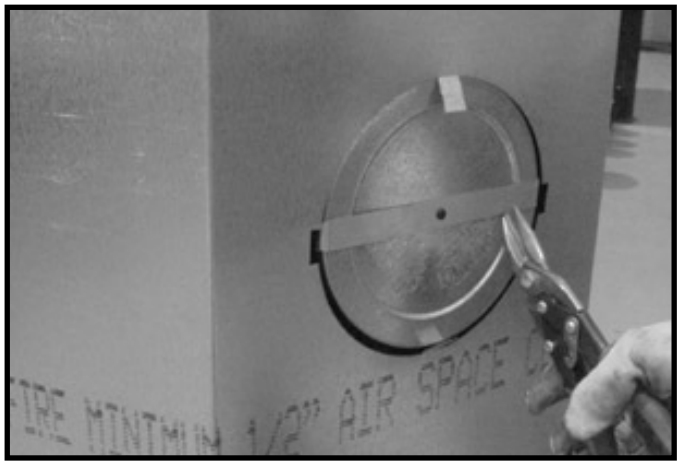

Figure 6.13 (Generic Fireplace Shown) Cut the metal retaining band and fold the sides out.

Figure 6.14 (Generic Fireplace Shown) Fold the center parts of the retaining band out and use to remove the seal cap.

NOTICE: *Once the seal cap has been removed it CANNOT be reattached.*

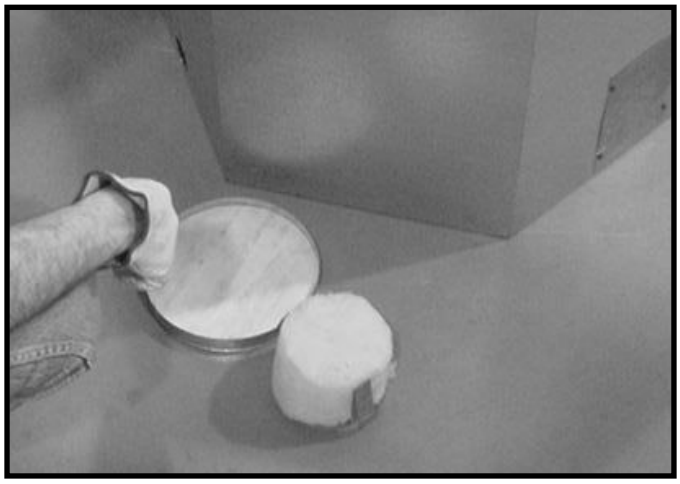

Figure 6.15 (Generic Fireplace Shown) Discard the seal cap, remove and discard the insulation basket.

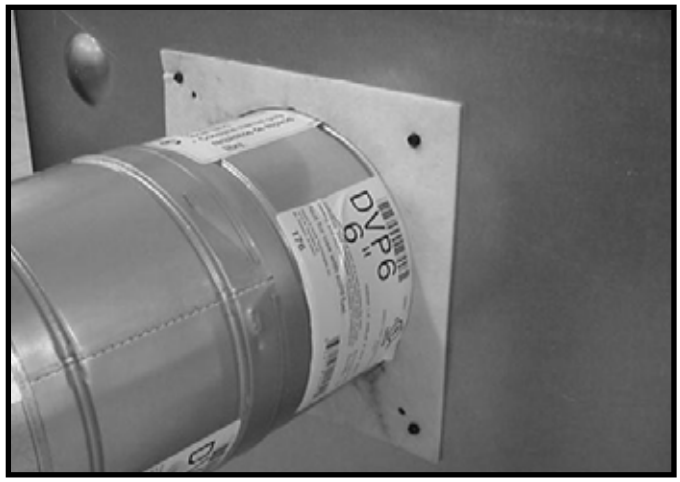

Figure 6.16 (Generic Fireplace Shown) Attach the first vent section (it will snap into place). Slide the insulation gasket onto the vent section, up against the appliance and over the tabs. Use four self-tapping screws to secure gasket to outer wrap.

B. Prepare For Heat Management

NOTICE: *Additional clearances are required for heat management systems installations. Provisions must be made in advance to ensure fit within the framing.*

- Heat management systems include Heat-Zone®- Gas and Heat-Out-Gas Contact your dealer for information.
- Locate the heat management ports on the left and right sides of the appliance. One or two Heat-Zones® or one Heat-Out-Gas kit may be installed. See Figure 6.17. Remove the knockouts from the appliance with a tin snips.
- Center the duct collar around the exposed hole and attach it to the appliance with 3 screws. Note: Do this BEFORE final positioning of the appliance.
- Determine the location for the air register/fan housing assembly.

Reference the instructions included in the heat management kit for the remaining installation steps.

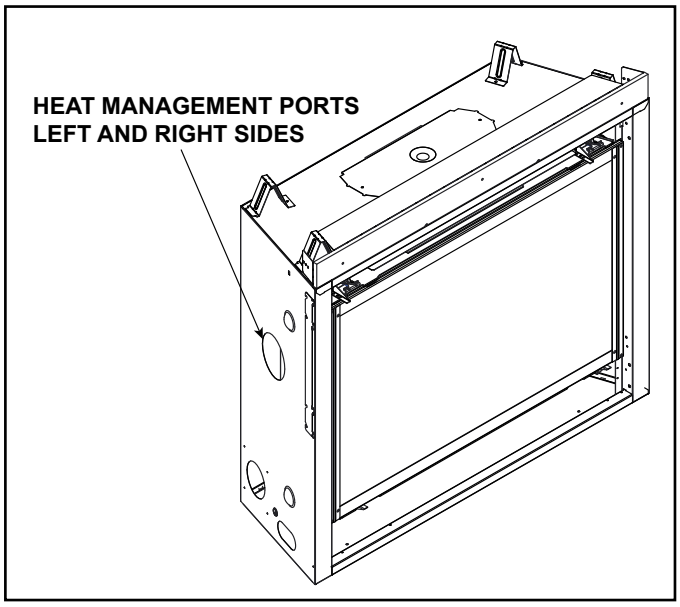

Figure 6.17 Heat Management Port Locations

C. Securing and Leveling the Appliance

⚠ WARNING

Risk of Fire!

Prevent contact with:

- *Sagging or loose insulation*
- *Insulation backing or plastic*
- *Framing and other combustible materials*

DO NOT remove standoffs or *notch the framing around the appliance standoffs.*

Failure to maintain air space clearance could cause overheating and fire.

Block openings into the chase to prevent entry of blown-in insulation. Make sure insulation and other materials are secured.

The diagram shows how to properly position and secure the appliance. See Figure 6.18. Nailing tabs are provided to secure the appliance to the framing members.

- Bend out nailing tabs on each side.
- Place the appliance into position.
- Keep nailing tabs flush with the framing.
- Level the appliance from side to side and front to back.
- Shim the appliance as necessary. It is acceptable to use wood shims underneath the appliance.
- Place a level on top, sides and bottom as shown in Figure 6.18.
- Secure the appliance to the framing by using nails or screws through the nailing tabs. Use a minimum of one fastener per nailing tab.
- Optional: Secure the appliance to the floor by inserting two screws through the pilot holes at the bottom of the appliance.

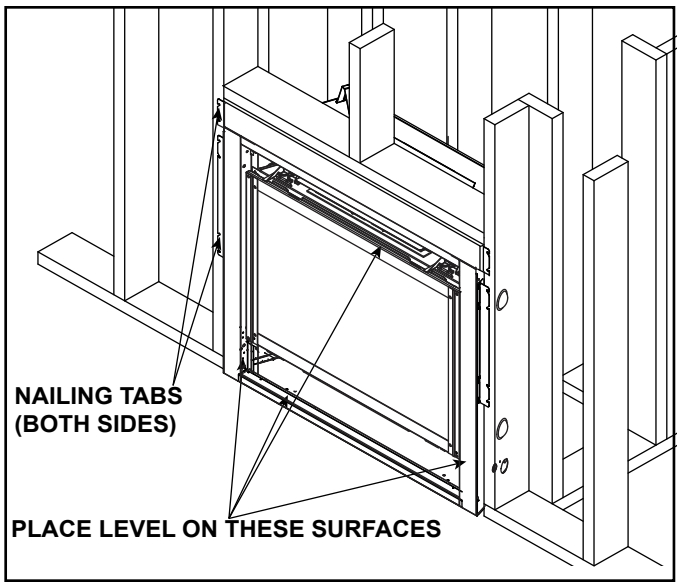

Figure 6.18 Proper Positioning and Securing of an Appliance

7 Venting

A. Assemble Vent Sections

Assemble Vent Sections (DVP Only)

WARNING! Risk of Fire or Explosion! *Vent sections MUST be installed correctly. Improperly installed vent sections could leak or cause appliance to overheat.*

Attach Vent to the Firebox Assembly

Note: The end of the pipe sections with the lanced tabs will face toward the appliance.

Attach the first pipe section to the starting collar:

- Lanced pipe end of the starting collar.
- Inner pipe over inner collar.
- Push the pipe section until all lanced tabs snap in place.
- Lightly tug on pipe to confirm it has locked.

Requirement for Commercial, Multi-family (Multi-level exceeding two stories), or High-Rise Applications

WARNING! Risk of Fire or Explosion! DO NOT *break silicone seals on slip sections. Use care when removing termination cap from slip pipe. If slip section seals are broken during removal of the termination cap, vent could leak.*

All outer pipe joints must be sealed using one of the methods below, including the slip section that connects directly to the horizontal termination cap.

- Apply a bead of silicone sealant (300 ºF minimum continuous exposure rating) inside the female outer pipe joint prior to joining sections. See Figure 7.1 **OR**

  Apply a bead of silicone sealant (300 ºF minimum continuous exposure rating) to the outside of connecting joint after joining sections **OR**

  Apply aluminum foil tape (300 ºF minimum continuous exposure rating) to the outside of connecting joint after joining sections. On horizontal pipe runs, it is recommended that the tape seam is positioned on the bottom side of the vent pipe.
- Only outer pipes need to be sealed. All unit collar, pipe, slip section, elbow and cap outer flues shall be sealed in this manner, unless otherwise stated.

Assemble Pipe Sections

Per Figure 7.2:

- Start the inner pipe on the lanced end of section A into the flared end of section B.
- Start the outer pipe of section A over the outer pipe of section B.
- Once both vents sections are started, push firmly until all lanced tabs lock into place.
- Lightly tug on the pipe to confirm the tabs have locked.

It is acceptable to use screws no longer than 1/2 in. (13 mm) to hold outer pipe sections together. If predrilling holes, **DO NOT** penetrate inner pipe.

For 90º and 45º elbows that are changing the vent direction from horizontal to vertical, one screw minimum should be put in the outer flue at the horizontal elbow joint to prevent the elbow from rotating. Use screws no longer than 1/2 in. (13 mm). If predrilling screw holes, **DO NOT** penetrate inner pipe.

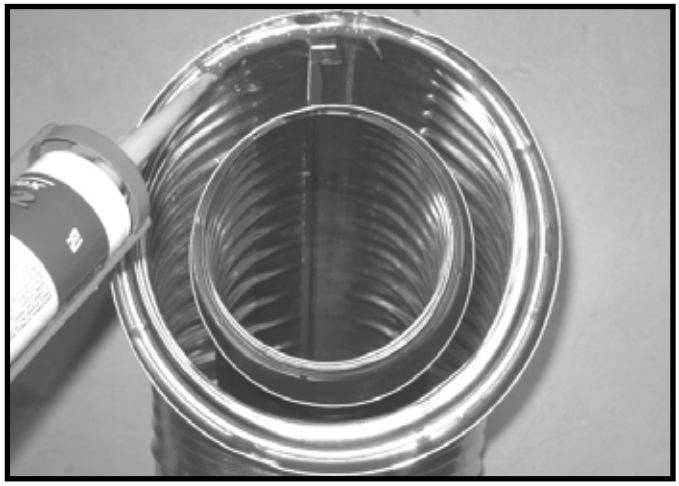

Figure 7.1 High Temperature Silicone Sealant

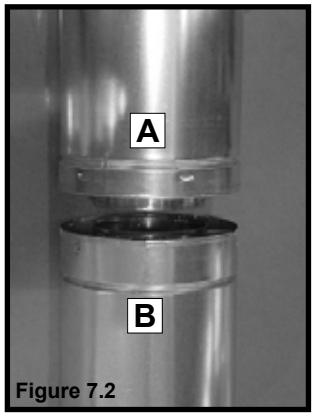

Figure 7.2

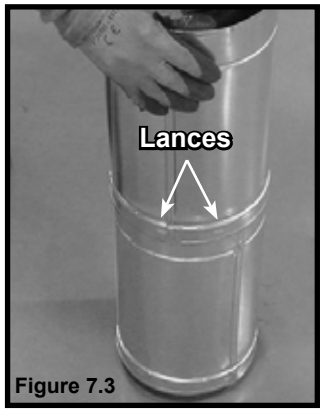

Figure 7.3

Note: Make sure that the seams are not aligned to prevent unintentional disconnection.

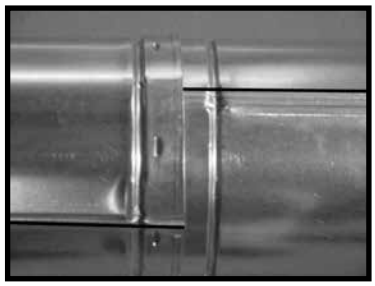

CORRECT

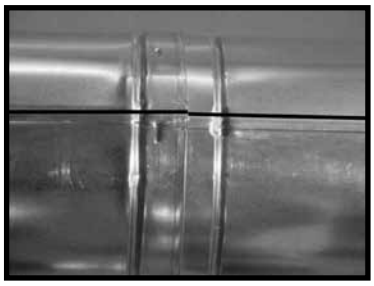

INCORRECT

Figure 7.4 Seams

NOTICE: *When installing a vent system with an HRC termination cap, all pipe system joints shall be sealed using a high temperature silicone sealant (300 ºF minimum continuous exposure rating).*

- *Apply a bead of silicone sealant (300 ºF minimum continuous exposure rating) inside the female outer pipe joint prior to joining sections.*
- *Only outer pipes are sealed, sealing the inner flue is not required.*
- *All unit collar, pipe, slip section, elbow and cap outer flues shall be sealed.*

Assemble Vent Sections (SLP Only)

WARNING! Risk of Fire or Explosion! *Vent sections MUST be installed correctly. Improperly installed vent sections could leak or cause appliance to overheat.*

To attach the first vent component to the starting collars of the appliance:

- Lock the vent components into place by sliding the pipe section onto the collar.
- Align the seam of the pipe and seam of collar to allow engagement. Rotate the vent component to lock into place. Use this procedure for all vent components. See Figure 7.5.
- Slide the gasket over the first vent section and place it flush to the appliance. This will prevent cold air infiltration. Caulk with a minimum of 300 ºF continuous exposure rating may be used to hold the part in place.
- Continue adding vent components, locking each succeeding component into place.
- Ensure that each succeeding vent component is securely fitted and locked into the preceding component.

It is acceptable to use screws no longer than 1/2 in. (13 mm) to hold outer pipe sections together. If predrilling holes, **DO NOT** penetrate inner pipe.

Requirement for Commercial, Multi-family (Multi-level exceeding two stories), or High-Rise Applications

All outer pipe joints must be sealed using one of the methods below, including the slip section that connects directly to the horizontal termination cap.

- Apply a bead of silicone sealant (300 ºF minimum continuous exposure rating) inside the female outer pipe joint prior to joining sections. See Figure 7.1 **OR**

  Apply a bead of silicone sealant (300 ºF minimum continuous exposure rating) to the outside of connecting joint after joining sections **OR**

  Apply aluminum foil tape (300 ºF minimum continuous exposure rating) to the outside of connecting joint after joining sections. On horizontal pipe runs, it is recommended that the tape seam is positioned on the bottom side of the vent pipe.
- Only outer pipes need to be sealed. All unit collar, pipe, slip section, elbow and cap outer flues shall be sealed in this manner, unless otherwise stated.

WARNING! Risk of Fire or Explosion! DO NOT *break silicone seals on slip sections. Use care when removing termination cap from slip pipe. If slip section seals are broken during removal of the termination cap, vent could leak.*

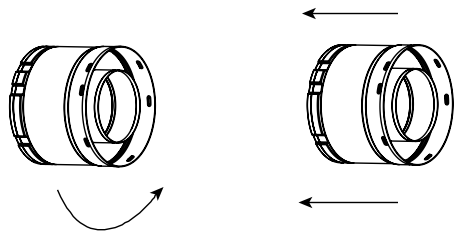

Note: Align seams to engage pipe, then rotate counterclockwise to lock

Figure 7.5 Adding Venting Components

NOTICE: *When installing a vent system with an HRC termination cap, all pipe system joints shall be sealed using a high temperature silicone sealant (300 ºF minimum continuous exposure rating).*

- *Apply a bead of silicone sealant (300 ºF minimum continuous exposure rating) inside the female outer pipe joint prior to joining sections.*
- *Only outer pipes are sealed, sealing the inner flue is not required.*
- *All unit collar, pipe, slip section, elbow and cap outer flues shall be sealed.*

B. Assemble Slip Sections

- Slide the inner flue of the slip section into the inner flue of the pipe section and the outer flue of the slip section over the outer flue of the pipe section. See Figure 7.6.
- Slide together to the desired length.

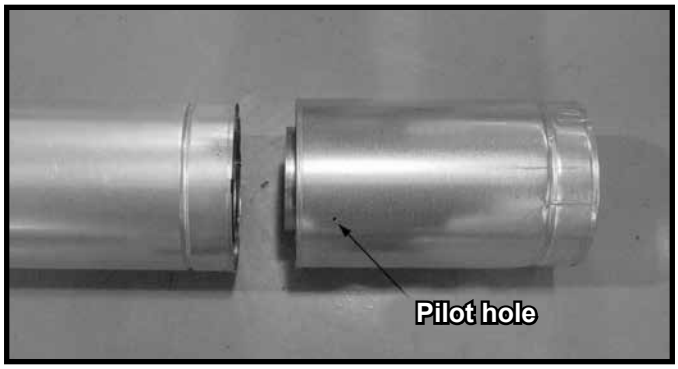

Figure 7.6 Slip Section Pilot Holes

- Maintain a 1-1/2 in. (38 mm) overlap between the slip section and the pipe section.
- Secure the pipe and slip section with two screws no longer than 1/2 in. (13 mm), using the pilot holes in the slip section. See Figure 7.7.

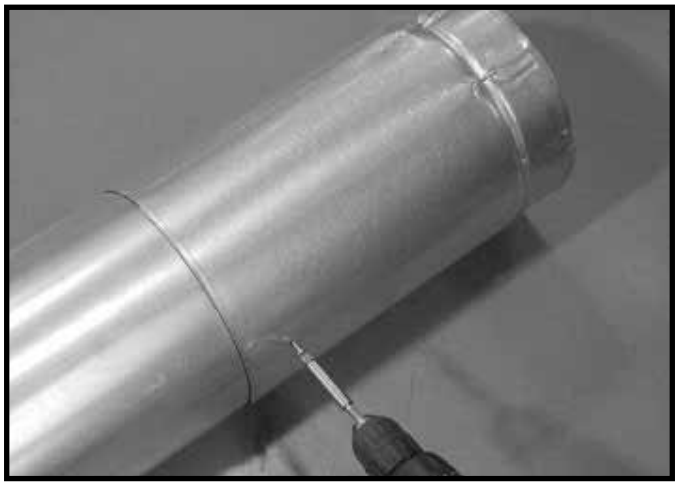

Figure 7.7 Screws into Slip Section

- Continue adding pipe as necessary following instructions in "Assembling Pipe Sections."

NOTICE: *If slip section is too long, the inner and outer flues of the slip section can be cut to the desired length.*

NOTICE: *When installing a vent system with an HRC termination cap, all pipe system joints shall be sealed using a high temperature silicone sealant (300 ºF minimum continuous exposure rating).*

- *Apply a bead of silicone sealant (300 ºF minimum continuous exposure rating) inside the female outer pipe joint prior to joining sections.*
- *Only outer pipes are sealed, sealing the inner flue is not required.*
- *All unit collar, pipe, slip section, elbow and cap outer flues shall be sealed.*

C. Secure the Vent Sections

WARNING! Risk of Fire, Explosion or Asphyxiation! *Improper support could allow vent to sag and separate. Use vent run supports and connect vent sections per installation instructions.* ***DO NOT*** *allow vent to sag below connection point to appliance.*

- Vertical runs originating off the top of the appliance, with no offsets, must be supported every 8 feet (2.44 m) after the maximum allowed 25 feet (7.62 m) of unsupported rise.
- Vertical runs originating off the rear of the appliance, or after any elbow, must be supported every 8 feet (2.44 m).
- Horizontal runs must be supported every 5 feet (1.52 m).
- Vent supports or plumbers strap (spaced 120º apart) may be used to support vent sections. See Figures 7.8 and 7.9.
- Wall shield firestops may be used to provide horizontal support to vent sections.
- SLP ceiling firestops have tabs that may be used to provide vertical support.

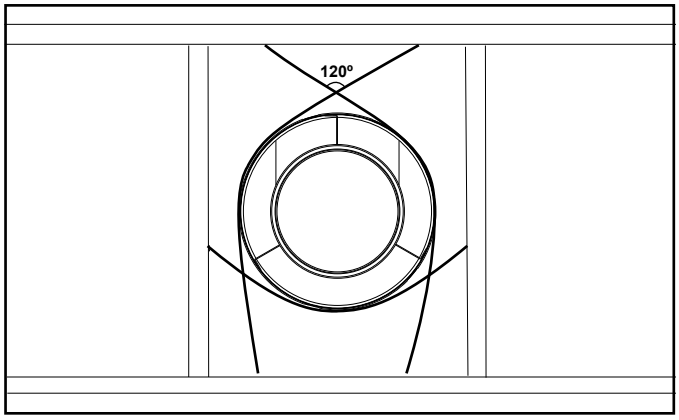

Figure 7.8 Securing Vertical Pipe Sections

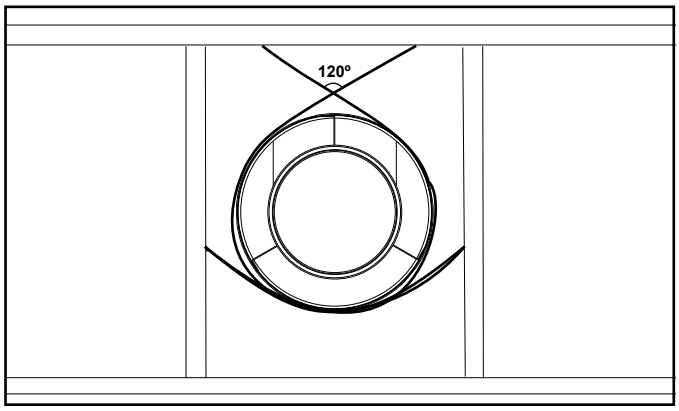

Figure 7.9 Securing Horizontal Pipe Sections

D. Disassemble Vent Sections

- Rotate either section (see Figure 7.10) so the seams on both pipe sections are aligned as shown in Figure 7.11.
- Pull carefully to separate the pieces of pipe.

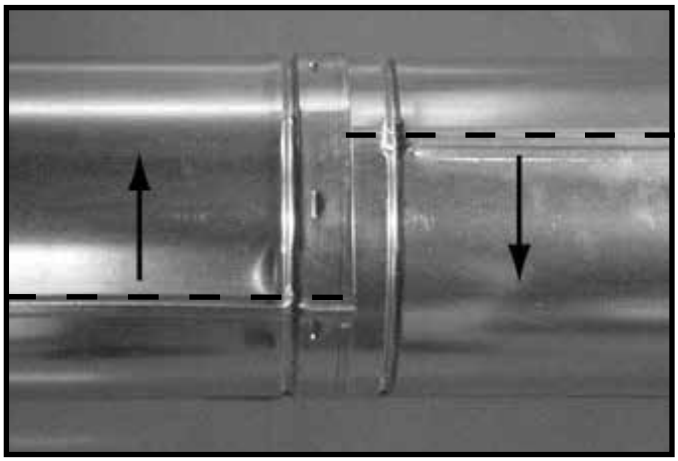

Figure 7.10 Rotate Seams for Disassembly

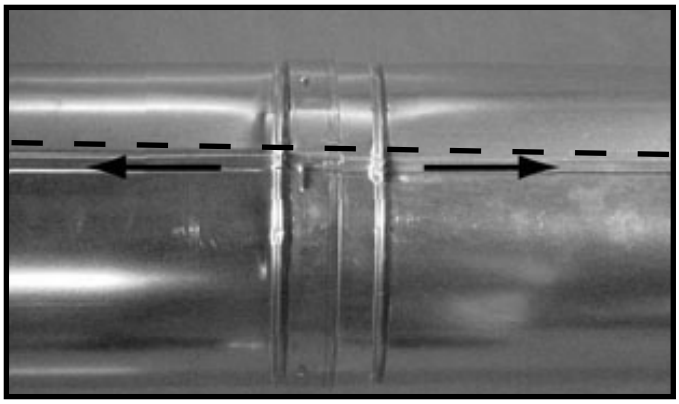

Figure 7.11 Align and Disassemble Vent Sections

E. Vertical Termination Requirements

Install and Seal Metal Roof Flashing

- See minimum vent heights for various pitched roofs (Section 4, Figure 4.1) to determine the length of pipe to extend through the roof.
- Slide the roof flashing over the pipe sections extending through the roof as shown in Figure 7.12.
- Use an elastomeric or silicone sealant with a minimum of 150 ºF temperature rating to seal the metal roof flashing.

Note: When installing a silicone or EPDM pipe flashing boot on a metal roof, it is recommended to put a bead of 100% silicone sealant where the boot contacts the vent pipe to prevent the entry of water. Follow the manufacturer's recommendations when installing the boot.

NOTICE: *Failure to properly-seal the roof flashing and pipe seams could permit entry of water.*

- Seal the gap between the roof flashing and the outside diameter of the pipe.
- Seal the perimeter of the flashing where it contacts the roof surface. See Figure 7.12.
- Seal the exposed pipe section seams that are located above the roof.

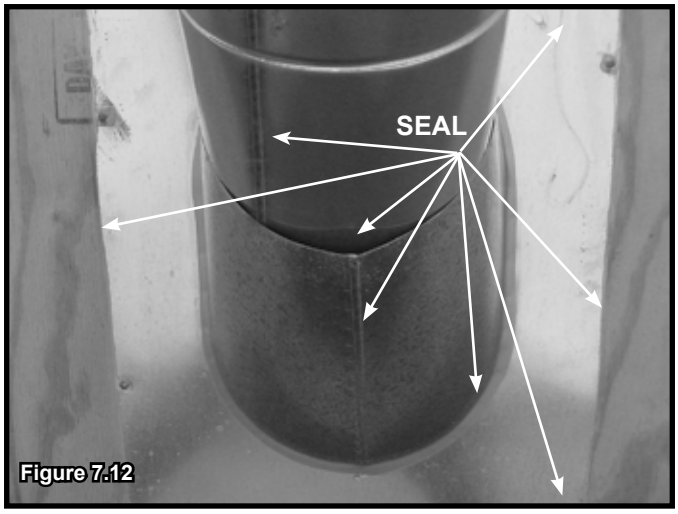

Figure 7.12

Assemble and Install Storm Collar

CAUTION! Risk of Cuts, Abrasions or Flying Debris. *Wear protective gloves and safety glasses during installation. Sheet metal edges are sharp.*

- Slide the storm collar onto the exposed pipe section and align brackets.
- Insert a bolt (provided) through the brackets and install nut. Do not completely tighten.

Figure 7.13 Insert Bolt into Brackets

- Slide the assembled storm collar down the pipe section until it rests on the roof flashing. See Figure 7.13.
- Tighten nut and make sure the collar is tight against the pipe section.
- Seal around the top of the storm collar. See Figure 7.14.

Install Vertical Termination Cap

- Attach the vertical termination cap by sliding the inner collar of the cap into the inner flue of the pipe section while placing the outer collar of the cap over the outer flue of the pipe section.
- Secure the cap by driving three self-tapping screws (supplied) through the pilot holes in the outer collar of the cap into the outer flue of the pipe. See Figure 7.14.

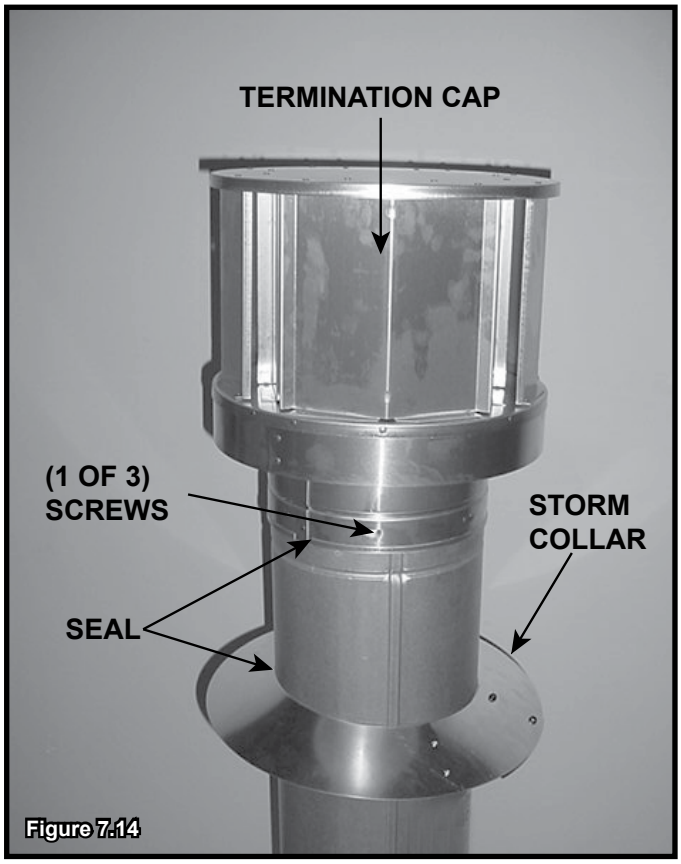

Figure 7.14

F. Horizontal Termination Requirements

Heat Shield Requirements for Horizontal Termination

WARNING! Risk of Fire! *To prevent overheating and fire, heat shields must extend through the entire wall thickness.*

- ***DO NOT*** *remove the heat shields attached to the wall shield firestop and the horizontal termination cap (shown in Figure 7.15).*
- *Heat shields must overlap 1-1/2 in. (38 mm) minimum.*

There are two sections of the heat shield. One section is factory-attached to the wall shield firestop. The other section is factory-attached to the cap. See Figure 7.15.

If the wall thickness does not allow the required 1-1/2 in. (38 mm) heat shield overlap when installed, an extended heat shield must be used.

- If the wall thickness is less than 4 in./102 mm (DVP) or 4-3/8 in./ 111 mm (SLP), the heat shields on the cap and wall shield firestop must be trimmed. A minimum 1-1/2 in. (38 mm) overlap MUST be maintained.
- Use an extended heat shield if the finished wall thickness is greater than 7-1/4 in. (184 mm).
- The extended heat shield may need to be cut to length maintaining sufficient length for a 1-1/2 in. (38 mm) overlap between heat shields.
- Attach the extended heat shield to either of the existing heat shields using the screws supplied with the extended heat shield. Refer to vent components diagrams in the back of this manual.
- Rest the small leg on the extended heat shield on top of the pipe section to properly space it from the pipe section.

Important Notice: Heat shields may not be field constructed.

Install Horizontal Termination Cap (DVP and SLP Pipe)

WARNING! Risk of Fire! *The telescoping flue section of the termination cap MUST be used when connecting vent.*

- *1-1/2 (38 mm) minimum overlap of flue telescoping section is required.*

Failure to maintain overlap could cause overheating and fire.

- Vent termination must not be recessed in the wall. Siding may be brought to the edge of the cap base.
- Flash and seal as appropriate for siding material at outside edges of cap.
- When installing a horizontal termination cap, follow the cap location guidelines as prescribed by current **ANSI Z223.1** and **CAN/CGA-B149** installation codes and refer to Section 4 of this manual.

CAUTION! Risk of Burns! *Local codes may require installation of a cap shield to prevent anything or anyone from touching the hot cap.*

NOTICE: *For certain exposures which require superior resistance to wind-driven rain penetration, a flashing kit and HRC caps are available. When penetrating a brick wall, a brick extension kit is available for framing the brick.*

Note: When using termination caps with factory-supplied heat shield attached, no additional wall shield firestop is required on the exterior side of a combustible wall.

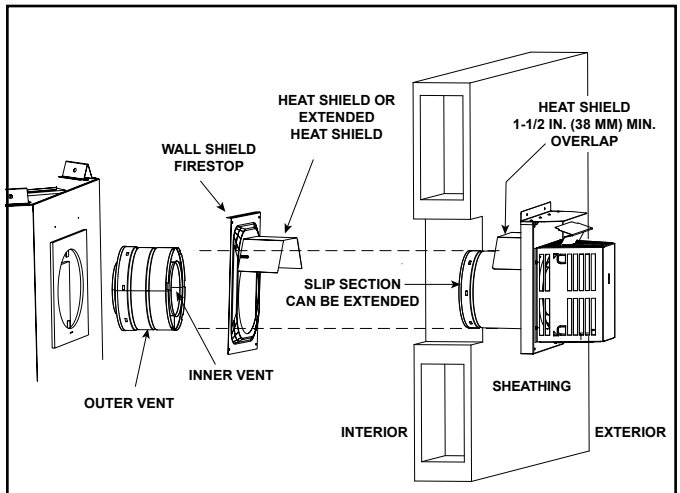

Figure 7.15 Venting Through the Wall

8 Electrical Information

A. General Information

***WARNING! Risk of Shock! DO NOT** wire 110-120 VAC to the ignition module or to the appliance wall switch. (IPI)*

Incorrect wiring will damage controls.

***NOTICE:** This appliance must be electrically wired and grounded in accordance with local codes or, in the absence of local codes, with* **National Electric Code ANSI/NFPA 70-latest edition** *or the* **Canadian Electric Code CSA C22.1.**

- Wire the appliance circuit using a minimum 14-2 AWG with ground to unswitched 110-120 VAC. This is required for proper operation of the appliance (IntelliFire® ignition).
- A 110-120 VAC circuit for this product must be protected with ground-fault circuit interrupter protection, in compliance with the applicable electrical codes, when it is installed in locations such as in bathrooms or near sinks.
- Low voltage and 110-120 VAC voltage cannot be shared within the same wall box.
- In some instances, the spark ignition of the fireplace may cause intermittent, non-damaging, interference during the lighting sequence with a TV plugged into the same circuit. It is recommended that the fireplace and TV use different circuits to mitigate the interference potential. If interference is occurring on the same circuit, the use of surge protectors may help alleviate the interference.

Junction Box Wiring

If the box is being wired from the **INSIDE** of the appliance:

- Remove the screw attaching the junction box/receptacle to the outer shell, rotate the junction box inward to disengage it from the outer shell. See Figure 8.1.
- Pull the electrical wires from outside the appliance through the opening into the valve compartment and secure wires with a Romex connector. See Figure 8.1.
- Make all necessary wire connections to the junction box/receptacle and reattach the junction box/receptacle to the outer shell.

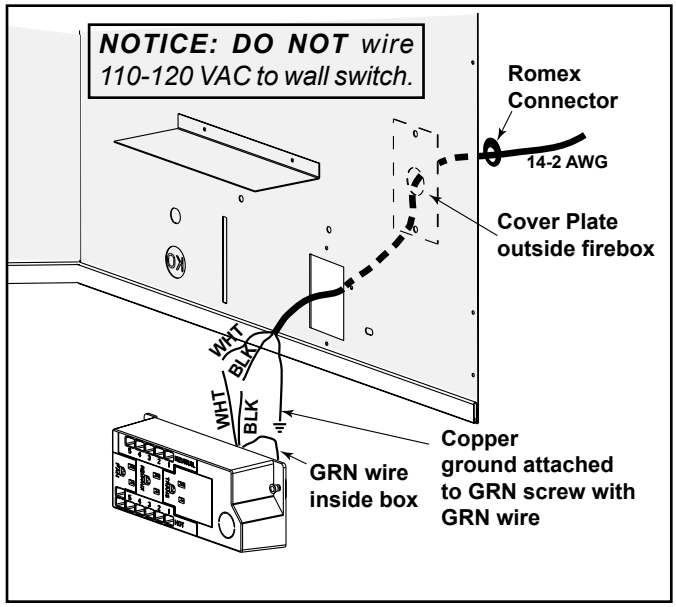

Figure 8.1 Junction Box Detail

Accessories Requirements

- This appliance may be used with a wall switch, wall mounted thermostat and/or a remote control.

Wiring for optional Hearth & Home Technologies approved accessories should be done now to avoid reconstruction. Follow instructions that come with those accessories.

Electrical Service and Repair

WARNING! Risk of Shock! *Label all wires prior to disconnection when servicing controls. Wiring errors could cause improper and dangerous operation. Verify proper operation after servicing.*

WARNING! Risk of Shock! *Replace damaged wire with type 105º C rated wire. Wire must have high temperature insulation.*

Component Tray

The electrical components are installed on the component tray. If it becomes necessary to remove the components, use the information in Figure 8.2 to remove them and reinstall them correctly on the component tray.

The IFT-ECM is held in position by two placement tabs (front and rear) on the component tray. To remove the IFT-ECM, bend the front or rear placement tab back slightly and tip the IFT-ECM to disengage it from the placement tabs. To reinstall the IFT-ECM on the component tray, engage the front placement tab first.

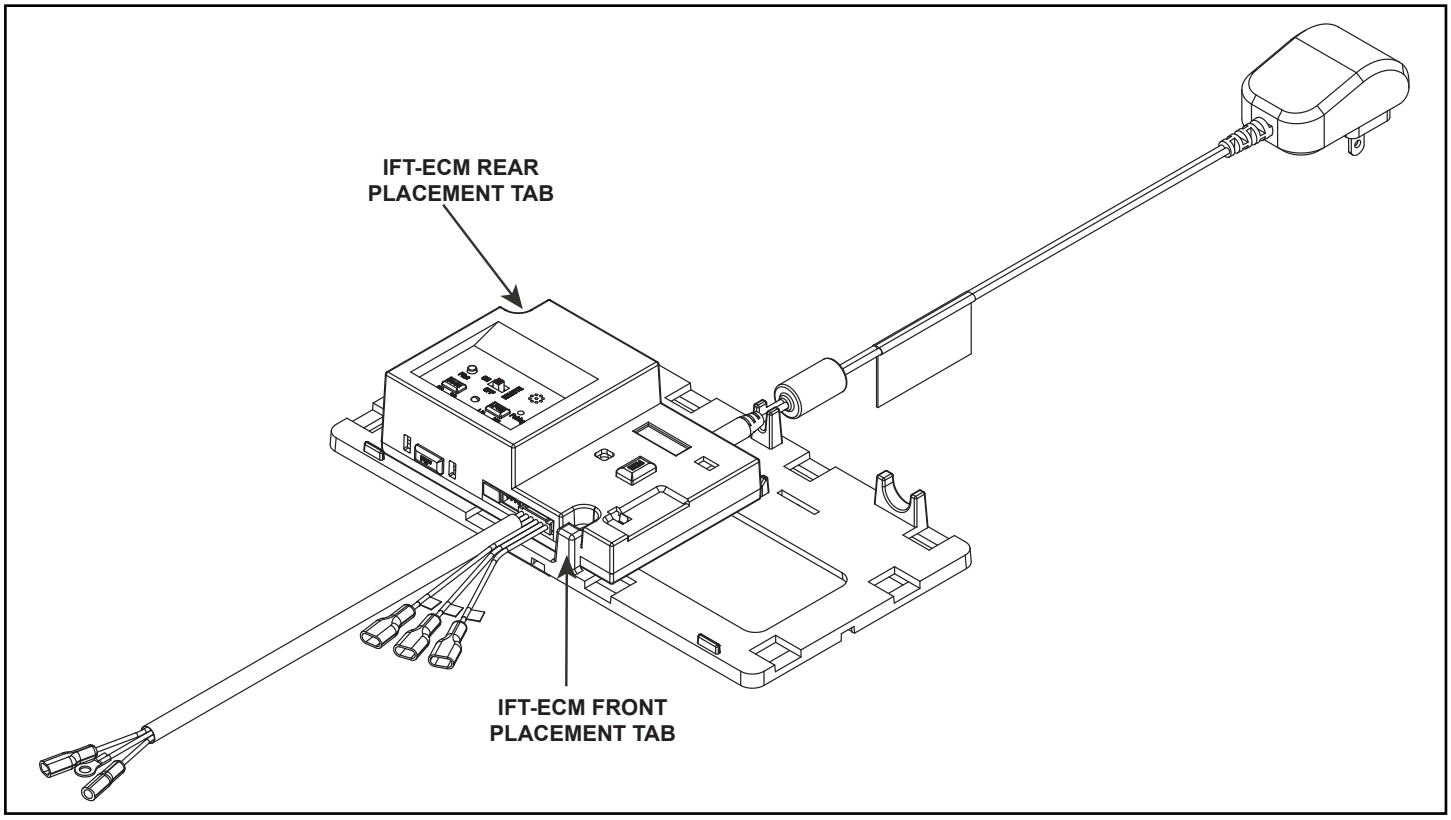

Figure 8.2 Electrical Component Tray

B. Wiring Requirements

IntelliFire Touch® Ignition System Wiring

- Wire the appliance junction box to 110-120 VAC for proper operation of the appliance.

***WARNING! Risk of Shock or Explosion! DO NOT** wire IPI controlled appliance junction box to a switched circuit. Incorrect wiring will override IPI safety lockout.*

- Refer to Figure 8.3 IntelliFire Touch (IFT) Wiring Diagram.
- This appliance is equipped with an IntelliFire control valve which operates on a 6 volt system.
- Plug the 6 volt transformer plug into the appliance junction box to supply power to the appliance OR install 4 AA cell batteries (not included) into the battery pack before use.

***NOTICE:** Batteries should only be used as a power source in the event of an emergency power outage. Batteries should not be used as a primary long-term power source. Batteries tend to corrode over time. When using batteries as a power source, the 6 volt transformer must be unplugged from the receptacle.*

Do not store batteries in the battery pack when the appliance is powered by the 6 volt transformer connected to permanent electrical service.

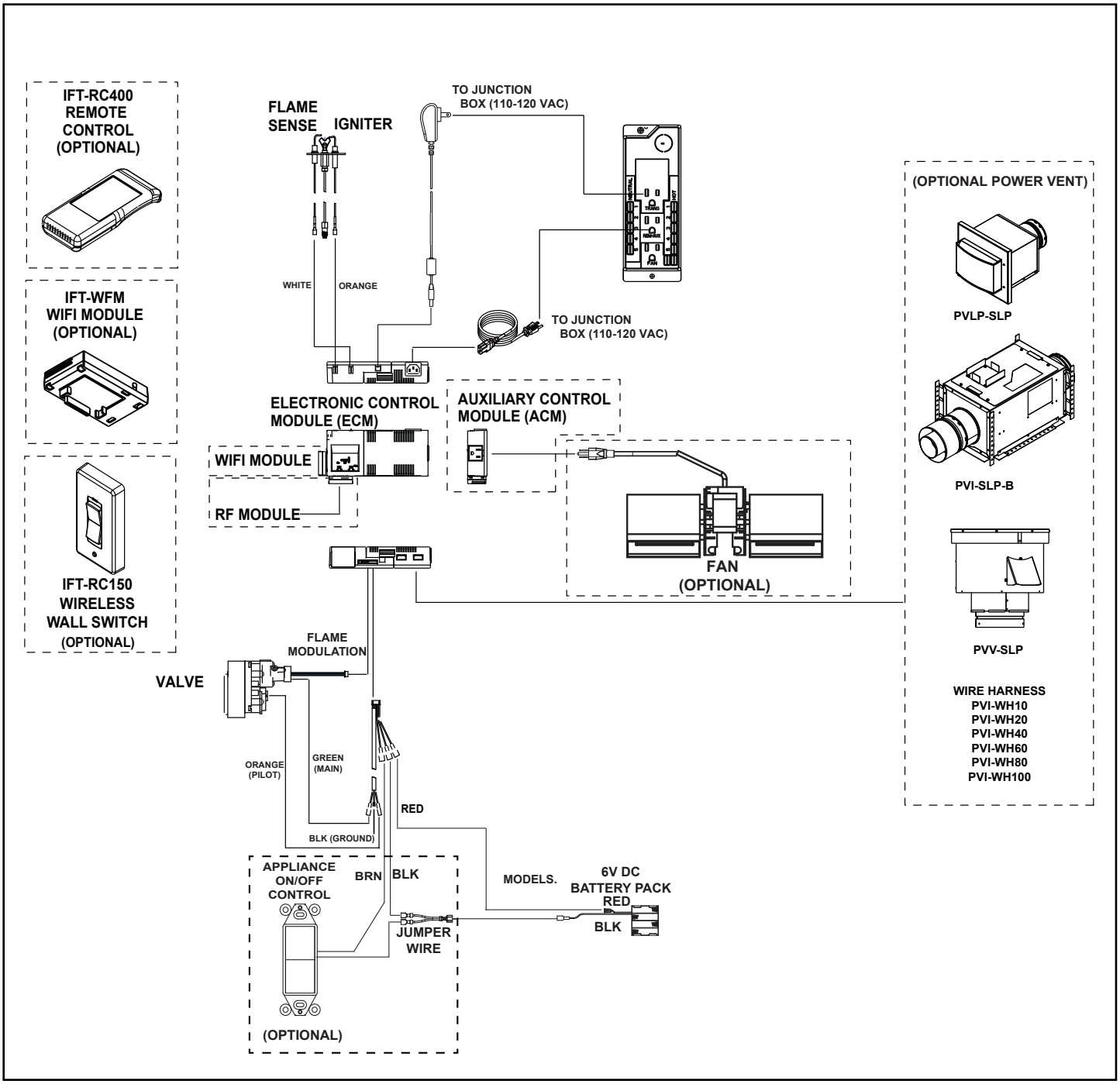

Figure 8.3 IntelliFire Touch Ignition Wiring Diagram

Wall Switch Installation for Fan (Optional)

If the box is being wired to a wall mounted switch for use with a fan. See Figure 8.4:

- The power supply for the appliance must be brought into a switch box.
- The power can then be supplied from the switch box to the appliance using a minimum of 14-3 with ground wire.
- At the switch box connect the black (hot) wire and red (switch leg) wire to the wall switch as shown.
- At the appliance connect the black (hot), white (neutral) and green (ground) wires to the junction box as shown.
- Add a 1/4 inch insulated female connector to the red (switch leg) wire, route it through the knockout in the face of the junction box, and connect to the top fan switch connector (1/4 inch male) as shown.

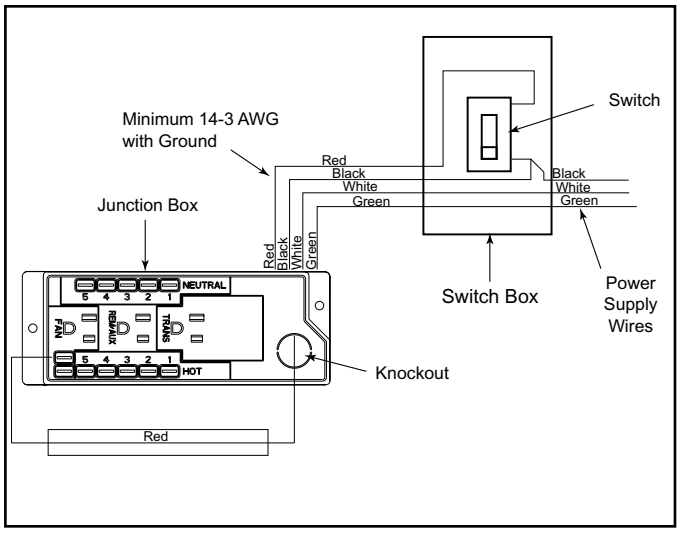

Figure 8.4 Junction Box Wired to Wall Switch

Temperature Sensor Wiring for Fan (Optional)

If the fan will not be installed for operation with a wall switch, the temperature sensor will need to be installed. See Figure 8.5 for location of the temperature sensor and fan control.

- The power supply for the appliance must be brought into the junction box.
- Install rheostat in location as seen in Figure 8.5.
- Connect temperature sensor switch wire and rheostat switch wires to junction box as shown in Figure 8.6.

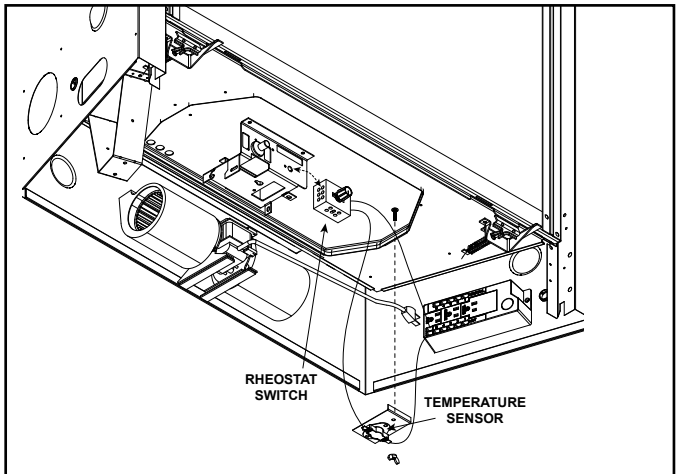

Figure 8.5 Fan Wiring with Rheostat

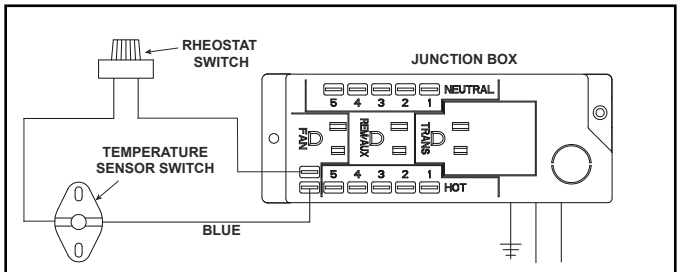

Figure 8.6 Detail of Fan Wiring with Rheostat

9 Gas Information

A. Fuel Conversion

- Make sure the appliance is compatible with available gas types.
- Conversions must be made by a qualified service technician using Hearth & Home Technologies specified and approved parts.

B. Gas Pressure

⚠ WARNING

Fire Risk.

Risk of Fire! Risk of Explosion!

Incorrect pressure will damage valve.

- Isolate gas supply piping BEFORE pressure testing gas line at test pressures above 1/2 psig.
- Close the manual shutoff valve BEFORE pressure testing gas line at test pressures equal to or less than 1/2 psig.

- Optimum appliance performance requires proper input pressures.
- Gas line sizing requirements will be determined in ANSI Z223.1 National Fuel Gas Code in the USA and CAN/CGA B149 in Canada.
- Pressure requirements when in operation are:

Gas Pressure	Natural Gas	Propane
Minimum inlet pressure	5.0 in. w.c.	11.0 in. w.c.
Maximum inlet pressure	10.0 in. w.c.	13.0 in. w.c.
Manifold pressure	3.5 in. w.c.	10.0 in. w.c.

- Verify inlet pressures. Verify minimum pressures when other household gas appliances are operating.
- Install regulator upstream of valve if line pressure is greater than 1/2 psig.

Note: Have the gas supply line installed in accordance with local codes, if any. If not, follow ANSI Z223.1. Installation should be done by a qualified installer approved and/or licensed as required by the locality. (In the Commonwealth of Massachusetts installation must be performed by a licensed plumber or gas fitter).

Note: A listed (and Commonwealth of Massachusetts approved) 1/2 in. (13 mm) T-handle manual shut-off valve and flexible gas connector are connected to the 1/2 in. (13 mm) control valve inlet.

- **If substituting for these components, please consult local codes for compliance.**

C. Gas Connection

- Refer to Section 3 for location of gas line access in appliance.
- Gas line may be run through knockout(s) provided.
- The gap between supply piping and gas access hole may be sealed with caulk or aluminum foil tape with a minimum of 300 ºF continuous exposure rating or stuffed with non-combustible, unfaced insulation to prevent cold air infiltration.
- Ensure that gas line does not come in contact with outer wrap of the appliance. Follow local codes.
- Pipe incoming gas line into valve compartment.
- Connect incoming gas line to the 1/2 in. (13 mm) NPT connection on manual shutoff valve.

WARNING! Risk of Fire or Explosion! *Support control when attaching pipe to prevent bending gas line.*

WARNING! Risk of Fire or Explosion! *Gas build-up during line purge could ignite.*

- *A small amount of air will be in the gas supply lines.*
- *Ensure adequate ventilation.*
- *Ensure there are no ignition sources such as sparks or open flames.*

Light the appliance. It will take a short time for air to purge from lines. When purging is complete the appliance will light and operate normally.

WARNING! Risk of Fire, Explosion or Asphyxiation! *Check all fittings and connections with a non-corrosive commercially available leak-check solution.* ***DO NOT*** *use open flame. Fittings and connections could have loosened during shipping and handling.*

D. High Altitude Installations

NOTICE: *If the heating value of the gas has been reduced, these rules do not apply. Check with your local gas utility or authorities having jurisdiction.*

When installing above 2000 feet elevation:

- In the USA: Reduce input rate 4% for each 1000 feet above 2000 feet.
- In CANADA: Input ratings are certified without a reduction of input rate for elevations up to 4500 feet (1370 m)above sea level. Please consult provincial and/or local authorities having jurisdiction for installations at elevations above 4500 feet (1370 m).

Check with your local gas utility to determine proper orifice size.

E. Air Shutter Setting

WARNING! *Risk of Explosion or Delayed Ignition! Improperly adjusted air shutter could cause soot buildup.*

NOTICE: *If sooting occurs, provide more air by opening the air shutter.*

Air shutter settings should be adjusted by a qualified service technician at the time of installation. The air shutter is set at the factory for a typical horizontal termination through a 2 X 6 wall: 90 degree elbow off top with 9 inches horizontal.

Factory Pre-Set Air Shutter Settings

QUARTZ32IFTN (NG)	3/16 in.
QUARTZ32IFTL (PROPANE)	5/16 in.
QUARTZ36IFTN (NG)	3/16 in.
QUARTZ36IFTL(PROPANE)	3/8 in.
QUARTZ42IFTN (NG)	1/4 in.
QUARTZ42IFTL (PROPANE)	5/16 in.

Natural Gas (NG) installations:

As a general rule, it is acceptable to reduce the shutter opening to adjust for short horizontally terminating or vertically terminating vent configurations. prior to the initial fire up.

Propane (P) installations

As a general rule, if the flames appear blue after 30 minutes of operation, it is acceptable to close the shutter slightly. Reduce shutter with caution to avoid soot potential.

Air Shutter Adjustment

The air shutter may be adjusted by locating and loosening the wing nut shown in Figure 9.1. Push/Slide the wing nut toward the back of the appliance to close the shutter. Pull/Slide the wing nut toward the front of the appliance to open the air shutter.

Shutter Setting Verification / Flame Appearance

- After 15 minutes, the flames will be a yellow/blue mix. The front flames may be blue at this time.
- After 30 minutes, the flames should be yellow with some blue flames near the burner ports.
- After 1 hour, the flame will be at its maximum maturity.

NOTICE: *Flames should not appear orange or stretch to the top refractory. If flames are dark orange with dark, smoky tips, provide more primary air to the burner by opening the air shutter accordingly.*

Note: Visually, a propane flame may differ from a natural gas flame. This is due to the different chemical compositions that make up both fuel types. In general, the propane (P) flames may be a little shorter and much brighter than a natural gas (NG) flame.

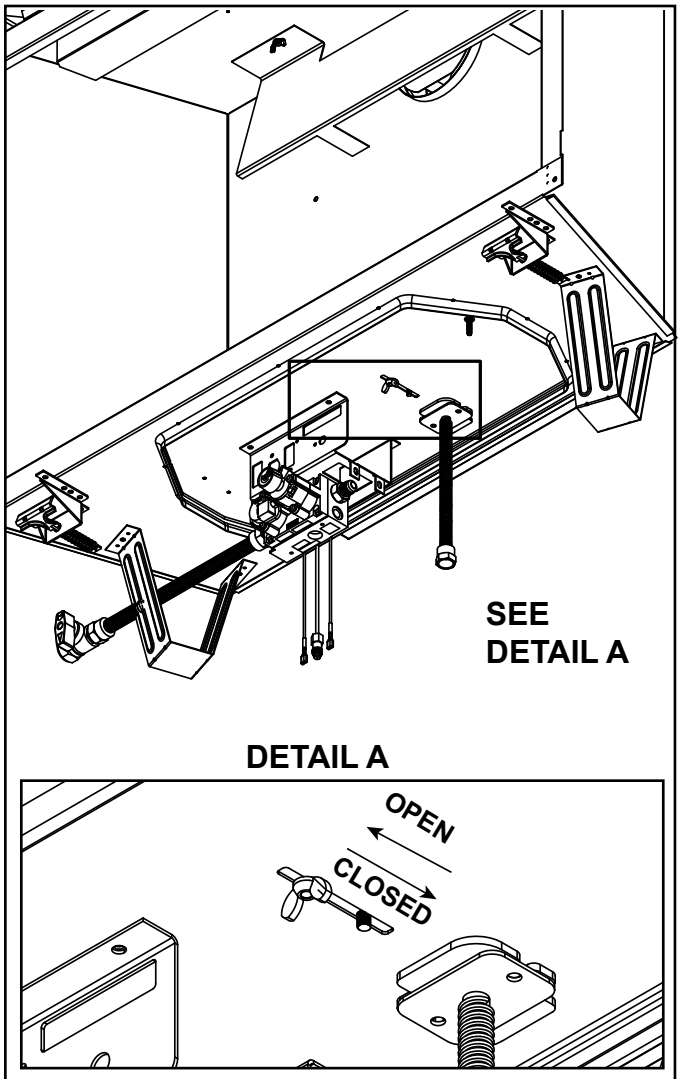

Figure 9.1 Air Shutter Adjustment

F. Burner Identification/Verification

The burner may be accessed for identification and verification purposes. This task should be performed by a qualified service technician. The logs and burner must be removed to see these identification marks. Disconnect the pilot from the burner before removal. See Figure 9.2 for burner identification chart. Notch patterns are located on bottom side of burner.

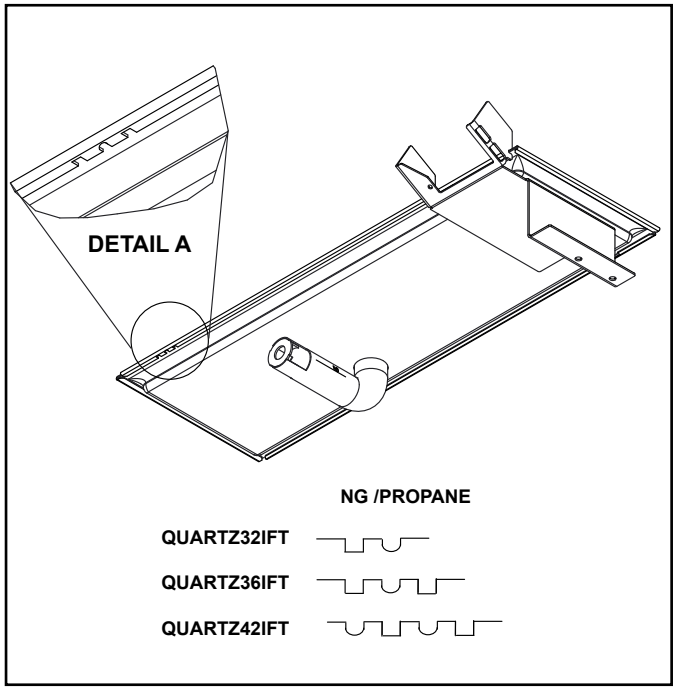

Figure 9.2 Burner Identification

10 Finishing

A. Facing Material

⚠ WARNING

Risk of Fire!

DO NOT *apply combustible materials beyond the minimum clearances. Comply with all minimum clearances to combustibles as specified in this manual. Materials overlapping into non-combustible zones could ignite and will interfere with air flow through decorative barrier fronts.*

- Metal front of appliance may be covered with non-combustible materials only.
- Facing and/or finishing materials must not interfere with air flow through decorative barrier fronts, removal of decorative barrier fronts or access for service.
- Facing and/or finishing materials must never overhang into the glass opening.
- Observe all clearances when applying combustible materials.
- Seal gaps between the finished wall and appliance top and sides using a 300 ºF minimum sealant. Refer to Figure 10.1.

NOTICE: *Surface temperatures around the appliance will become warm while the appliance is in operation. Ensure finishing materials used for all surfaces (floor, walls, mantels, etc.) will withstand temperatures up to 190ºF.*

For installations with vinyl flooring, see Section 3.D.

When using combustible flooring materials, such as carpeting and padding, the combustible flooring material must not extend higher than one inch from the base of the appliance when the appliance is mounted at floor level.

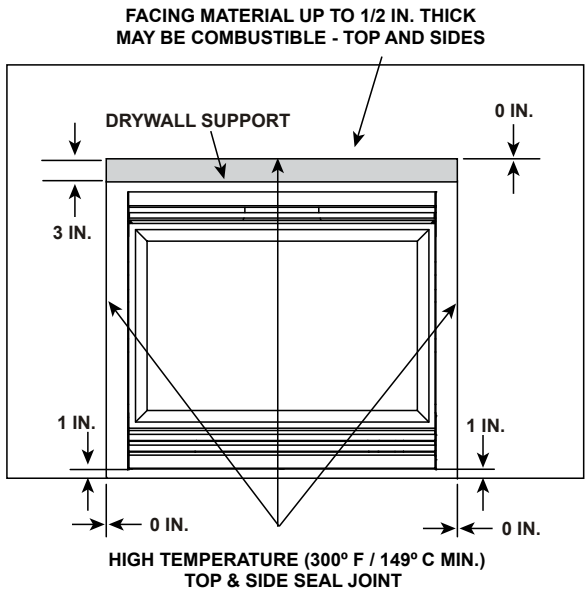

Figure 10.1 Non-combustible Facing Diagram

B. Installing a Television

If installing a television (TV) above the appliance, see Section 3 of the appliance Owner's Manual.

C. Mantel and Wall Projections

WARNING! Risk of Fire! *Comply with all minimum clearances as specified. Framing closer than the minimums listed must be constructed entirely of non-combustible materials (i.e., steel studs, concrete board, etc.).*

> **Note:** Measurement is taken from top/side of the opening, NOT the top/side of the fireplace.

Combustible Mantels

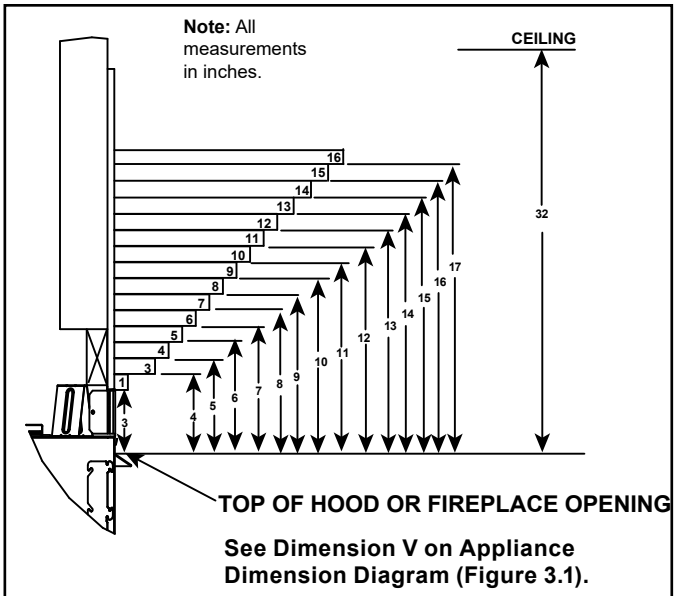

Figure 10.2 Minimum Vertical and Maximum Horizontal Dimensions of Combustibles

Non-Combustible Mantels

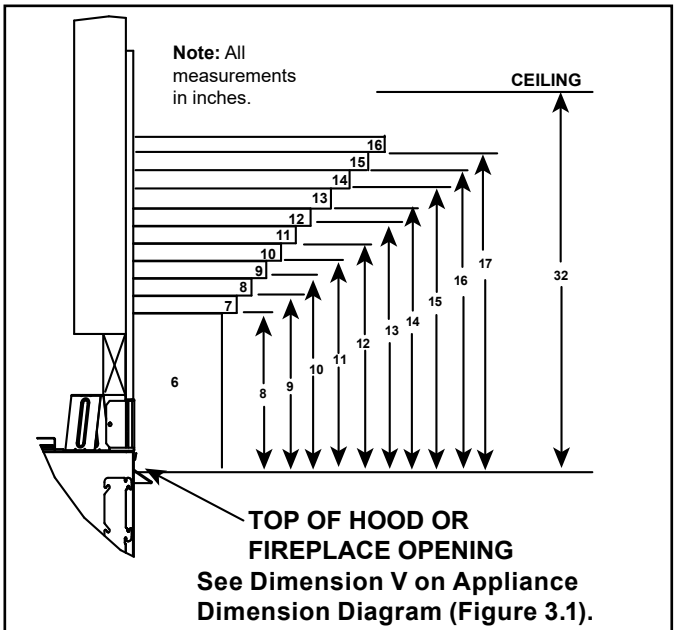

Figure 10.3 Minimum Vertical and Maximum Horizontal Dimensions of Non-Combustibles

Combustible Mantel Legs or Wall Projections

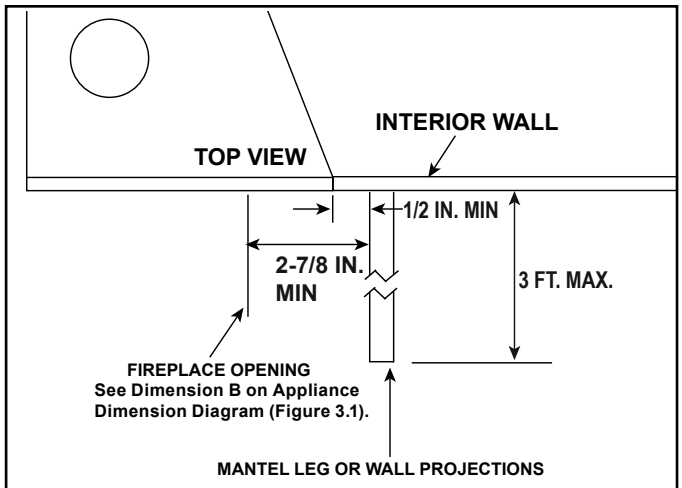

Figure 10.4 Combustible Mantel Leg or Wall Projections (Acceptable on both sides of opening)

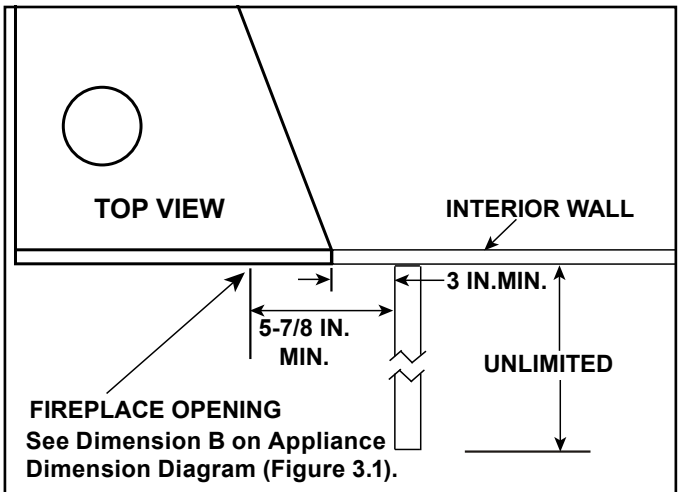

Figure 10.5 Combustible Mantel Leg or Wall Projections (Acceptable on one side of opening)

Non-Combustible Mantel Legs or Wall Projections

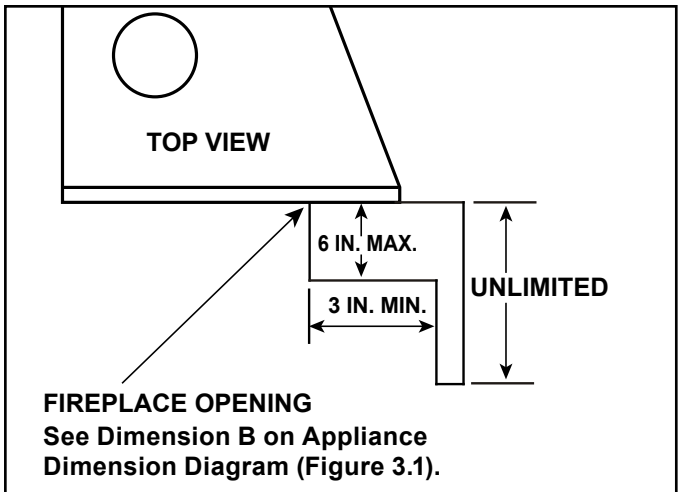

Figure 10.6 Non-Combustible Mantel Leg or Wall Projections (Acceptable on both sides of opening)

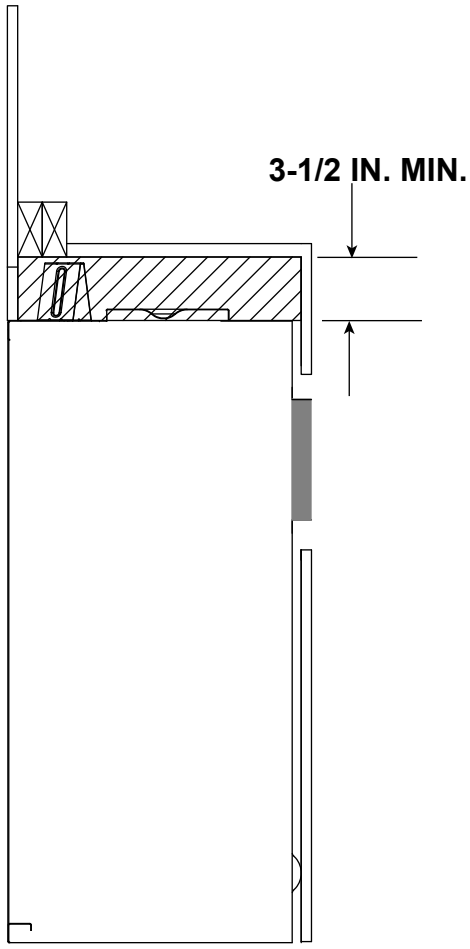

Figure 10.7 Rear Vent Non-Combustible Zone Above Appliance

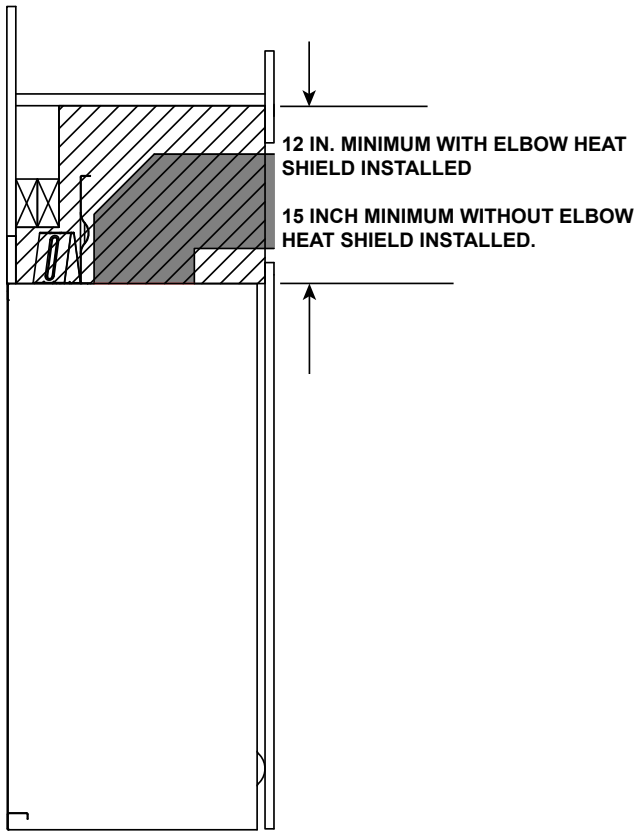

Figure 10.8 Top Vent Non-Combustible Zone Above Appliance

D. Decorative Barrier Front Dimensions for Finishing

The decorative barrier front included with this appliance is the only front certified for use with this appliance model.

Note: Refer to Section 3 for individual decorative barrier front dimensions as installed on appliance.

Inside Fit - Firescreen Front (0-6 Inch Finishing)

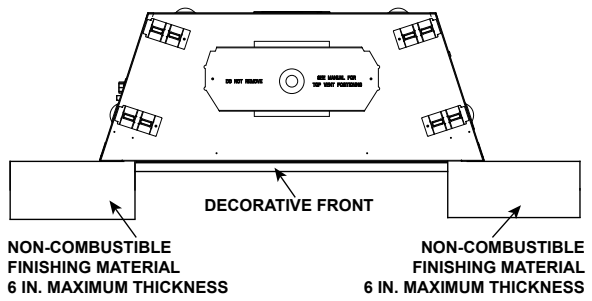

Stop finishing material flush with fireplace surround opening.

Figure 10.9 Firescreen Decorative Barrier Front

11 Appliance Setup

A. Remove the Shipping Materials

Remove shipping materials from inside or underneath the firebox.

- The splatter guard is a piece of corrugated material used to protect the appliance during the installation process before finishing work on the whole hearth is complete. Splatter guards may be factory installed or accompany the decorative barrier front of the appliance, depending on the fireplace model. Splatter guards must be removed before appliance is fired.

WARNING! Risk of Fire! *Close the ball valve before installing the splatter guard to prevent accidental lighting. Remove the splatter guard before lighting the appliance.*

B. Clean the Appliance

Clean/vacuum any sawdust that may have accumulated inside the firebox or underneath in the control cavity.

C. Install the Optional Refractory Kit

An optional reflective black glass or brick refractory kit is available for use with these models. Install the optional refractory kit per the included instructions.

D. Install the Log Assembly

Log Set Assembly: LOGS-QUARTZ32, LOGS-QUARTZ36
Models: QUARTZ32IN, QUARTZ32IL, QUARTZ36IN, QUARTZ36IL
QUARTZ32IFTN, QUARTZ32IFTL, QUARTZ36IFTN, QUARTZ36IFTL

LOG PLACEMENT INSTRUCTIONS

Install Logs

CAUTION: Logs are fragile, handle with care.

Overview

These are common log instructions for the QUARTZ32 and QUARTZ36 models. Each model uses 8 logs, 6 logs are common logs between the two sizes. Log position is controlled by two log pins (installed on burner) and four hand bend tabs located in the base pan.

*The photos shown in these instructions depict a QUARTZ36 model.

Log Identification:

Reference Figure 2 for log identification of logs. It is important to lay the logs out in order as shown in Figure 2. Some logs are similar to others in shape or size so it is imperative to correctly identify each log. The rear right log (#2) and the front right log (#4) that rest on the burner are different between the two sizes.

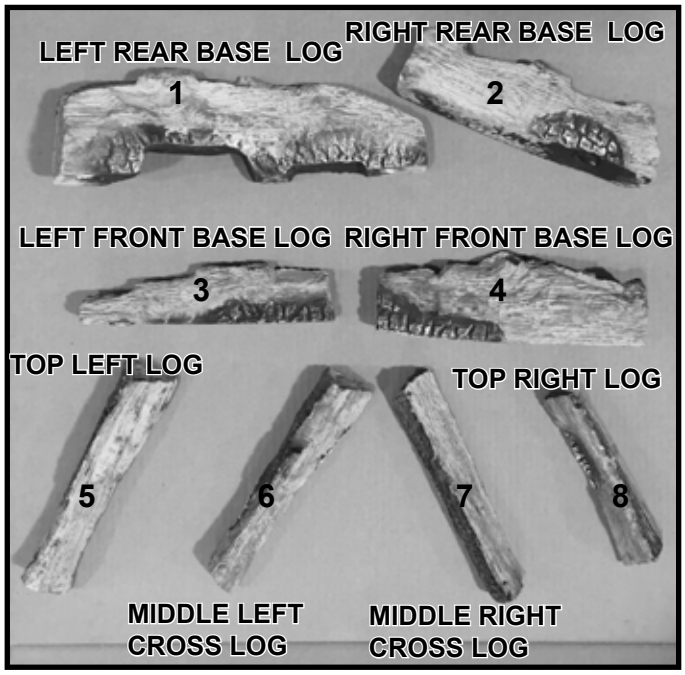

Figure 2. Log Assembly Components - QUARTZ36 Shown

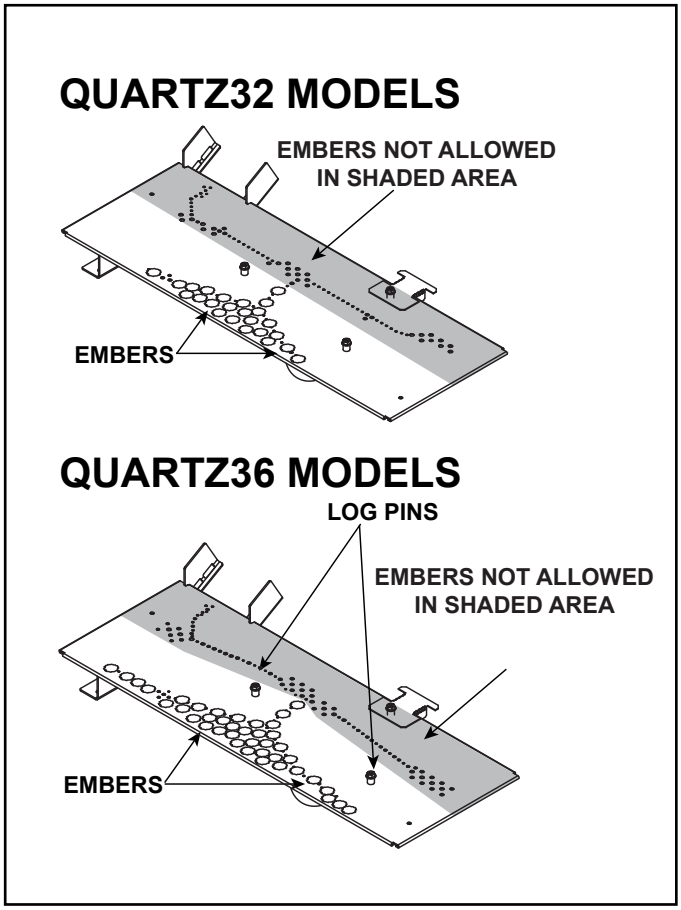

Figure 1. Log Pin and Glowing Ember Locations

1. Locate the four hand bend tab on the base pan and bend each tab up to 90 degrees. See Figure 3.

Figure 3. Hand Bend Tab Locations - QUARTZ36 Shown

2. Locate and install the left rear base log (1) by installing the right end of the log over the log pin. Then rotate the rear log until it contacts the rear left hand bend tab. See Figure 4.

Figure 4. Install Left Rear Base Log

3. Locate and install the right rear base log (2) by positioning the right end of the log against the rear right hand bend tab. The left side of the log will rest on the left rear log. When installed correctly, there should be approximately 1 inch between right rear log and back of firebox. See Figure 5.

Figure 5. Install Right Rear Base Log

4. Locate and install the left front base log (3) by installing the "right" end over the left burner pin and pressing "down" to engage log pin. The "left" side of this log will be positioned by the front left hand bend tab. The face of the log should contact the base pan edge. See Figure 6.

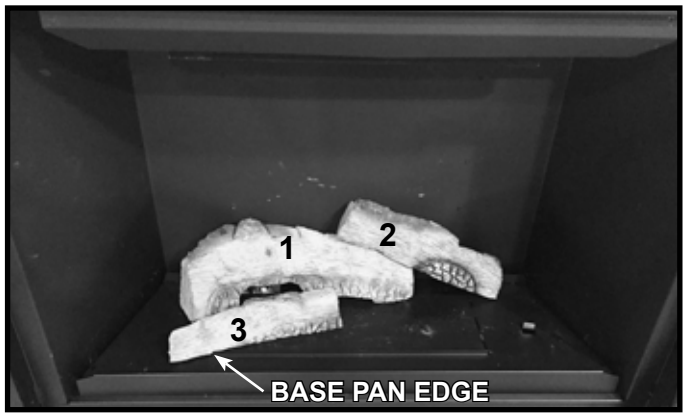

Figure 6. Install Left Front Base Log

5. Locate and install the right front base log (4) by installing the "left" end over the right burner pin and pressing "down" to engage the log pin. The "right" side of this log will be positioned by the front right hand bend tab. The face of the log should contact the base pan edge. See Figure 7.

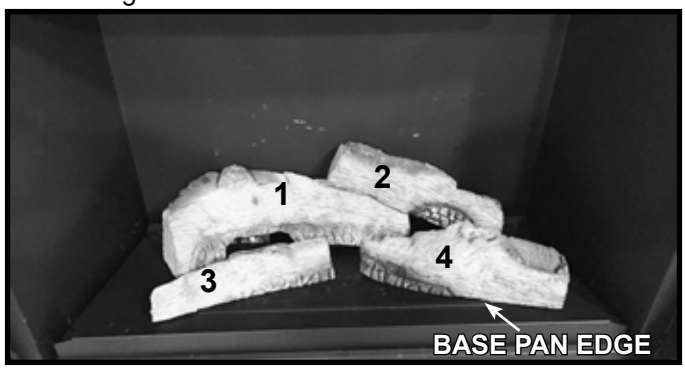

Figure 7. Install Right Front Base Log

6. Locate the glowing embers and install them as shown in Figure 1. Do not install any glowing embers on the back row of burner ports. Glowing Embers can be placed directly over burner ports; however, for optimal front flame height, place glowing embers around the burner port clusters indicated by the "arrows" shown in Figure 8.

WARNING! Risk of Explosion! *Follow ember placement instructions. Replace ember material annually. Improperly placed embers interfere with proper burner operation.*

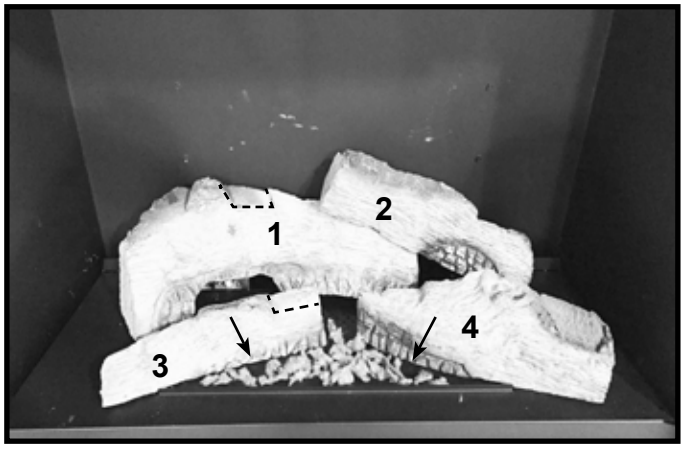

Figure 8.

7. **QUARTZ36 MODELS ONLY:** Locate and install Top Left Log (5). This Log does not have any "burn out" features painted on the log. The "left" end of this log will rest on the base pan and the "right" end will rest on the "left" end of Left Rear Base Log. See Figure 9.

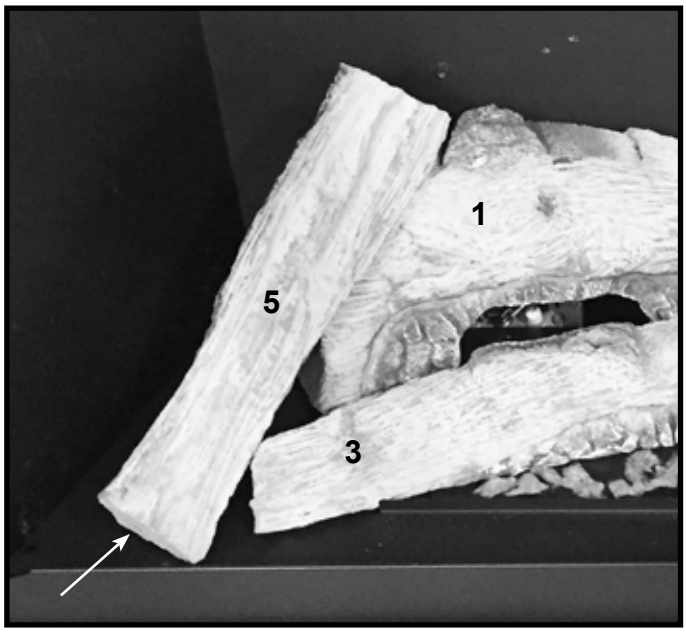

Figure 9. QUARTZ36: Install Top Left Log

8. **QUARTZ32 MODELS ONLY:** Locate and install Top Left Log (5). This Log does not have any "burn out" features painted on the log. The "left" end of this log will rest on the "left" side of the Left Front Base Log and the "right" end will rest on the "left" end of Left Rear Base Log. See Figure 10.

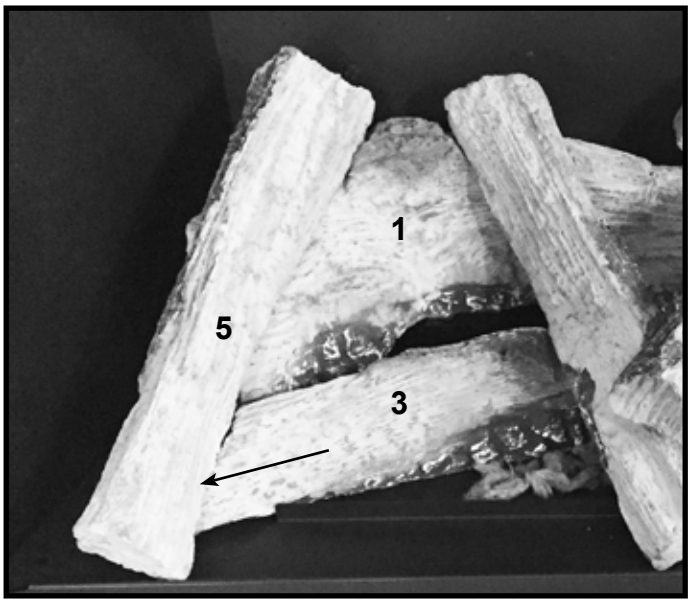

Figure 10. QUARTZ32: Install Top Left Log

9. The Middle Left Cross Log (6) will rest on the voids and the base pan lip as shown in figure 8. Install log by placing it on top of the log voids. The tip of the log will contact front lip of base pan. See Figure 11.

Figure 11. Install Middle Left Cross Log

10. The middle right cross log (7) will rest on two voids shown in Figure 11, install log by placing it on top of these voids. See Figure 12.

Figure 12. Install Middle Right Cross Log

11. The top right log (8) will rest on two voids shown in Figure 12, install log by placing it on top of these voids. See Figure 13.

12. This product is shipped with a bag of Lava Rock. Approximately one third of the bag will be used for initial setup, the remainder should be placed in the manual bag assembly and left with the homeowner. Do not store beneath the appliance. Install Lava Rock by placing it (by hand) in the locations denoted by arrows in Figure 13. Care should be taken to avoid placing lava rock on the burner.

***NOTICE: DO NOT** place lava rock on burner. Flame appearance could be affected.*

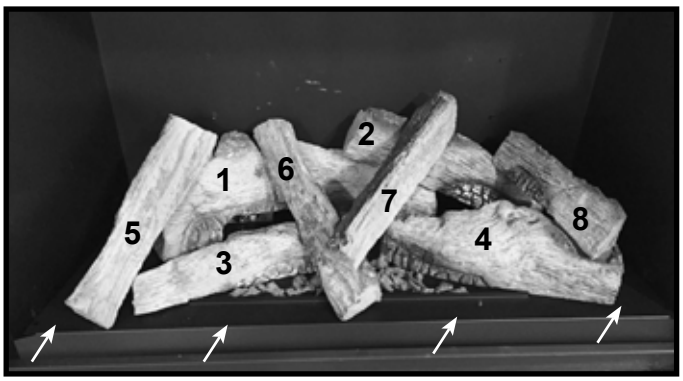

Figure 13. Install Top Right Log and Lava Rock Locations

2412-935C

Log Set Assembly: LOGS-QUARTZ42
Models: QUARTZ42IN, QUARTZ42IL QUARTZ42IFTN, QUARTZ42IFTL

LOG PLACEMENT INSTRUCTIONS

Install Logs

CAUTION: Logs are fragile, handle with care.

Log Identification:

Reference Figure 1 for identification of logs. It is important to lay the logs out in order as shown in Figure 1. Some logs are similar to others in shape or size so it is imperative to correctly identify each log.

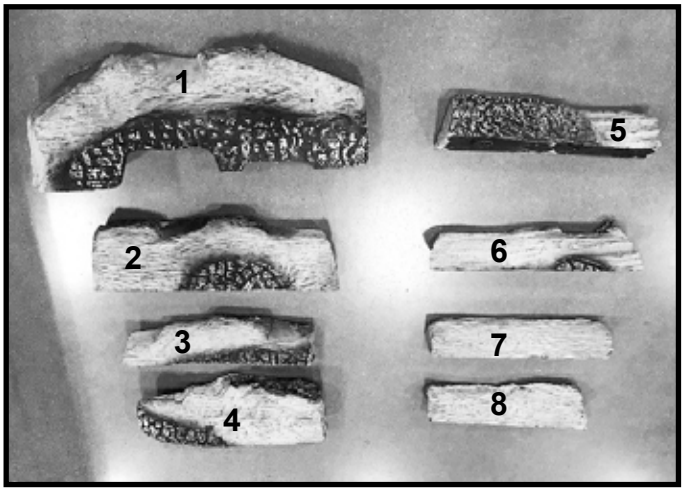

Figure 1. Log Identification

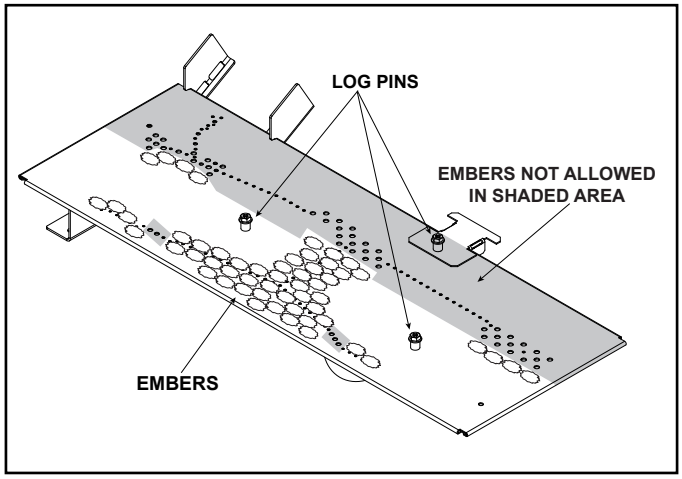

Figure 2. Log Pin and Glowing Ember Locations

1. Locate the five hand bend tabs on the base pan and bend each tab up to 90 degrees. Note the locations of the three log pins. See Figure 3.

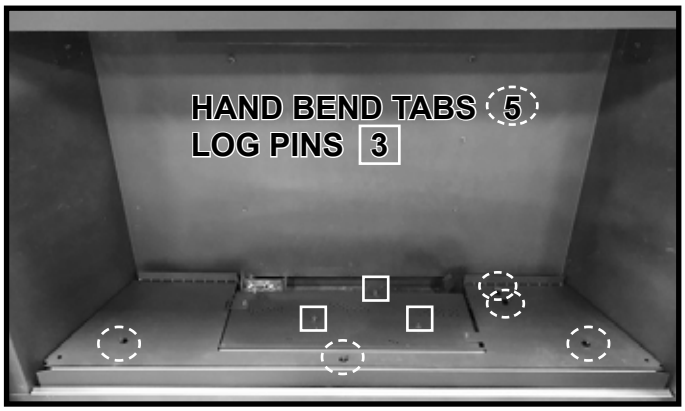

Figure 3. Hand Bend Tab and Log Pin Locations

2. **LOG #1:** Locate and install the Log #1 by installing the right end of the log over the rear log pin. Then rotate the left end of the log until it contacts the rear left hand bend tab. See Figure 4.

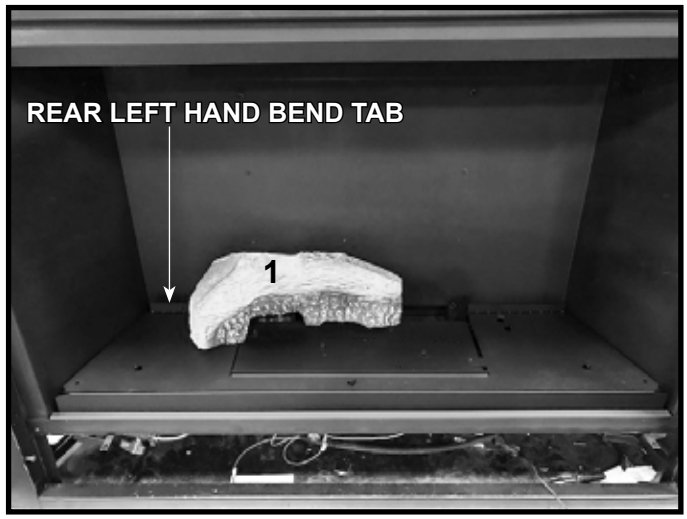

Figure 4. Install Log #1

3. **LOG #2:** Locate and install Log #2 by positioning the right end of the log against the two rear right hand bend tabs. The back right corner of the log will be placed between these tabs. The left side of the log will rest on Log #1. When installed correctly, the front face of Log #2 should be flush with the front face of Log #1. See Figure 5.

Figure 5. Install Log #2

4. **LOG #3:** Locate and install Log #3 by installing the "right" end of the log over the left burner pin and pressing "down" to engage log pin. Rotate Log #3 counterclockwise until it contacts the base pan edge as shown in Figure 6.

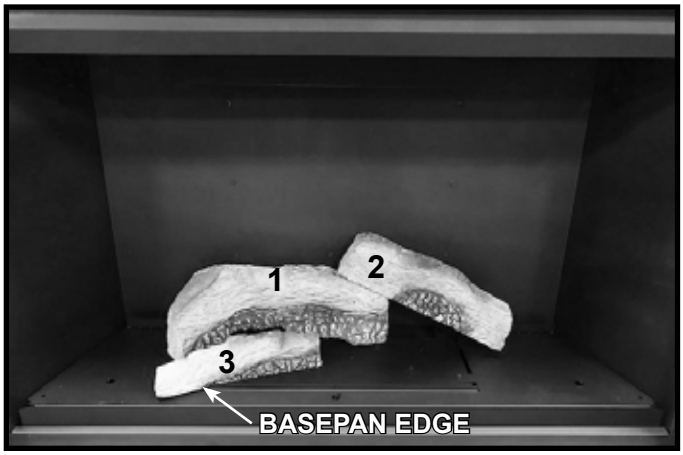

Figure 6. Install Log #3

5. **LOG #4:** Locate and install the Log #4 by installing the "left" end of the log over the right log pin and pressing "down" to engage the log pin. The face of the log should contact the base pan edge. See Figure 7.

Figure 7. Install Log #4

6. Locate the glowing embers and install them as shown in Figure 2. Do not install any glowing embers on the back row of burner ports. Glowing Embers can be placed directly over burner ports; however, for optimal front flame height, place glowing embers around the burner port clusters indicated by the "arrows" shown in Figure 8.

WARNING! Risk of Explosion! *Follow ember placement instructions. Replace ember material annually. Improperly placed embers interfere with proper burner operation.*

Figure 8. Embers Installed

7. **LOG #5:** Locate and install Log #5. This Log does not have any “burn out” features painted on the log. The “left” end of this log will rest on the base pan and contact the hand bend tab indicated in Figure 9. the “right” end will rest on the “left” end of Log #1. See Figure 9.

Figure 9. Install Log #5

8. **LOG #6:** Log #6 will rest on the voids of Log #1 and Log #3 and the base pan lip as shown in Figure 8. Install log by placing it on top of the log voids. The tip of the log will contact the hand bend tab nearest the base pan lip. See Figure 10.

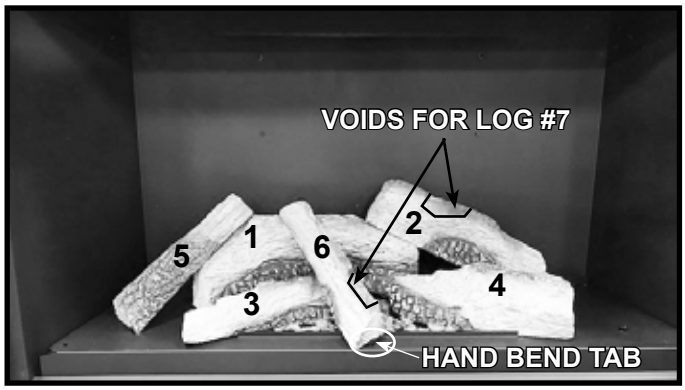

Figure 10. Install Log #6

9. **LOG #7:** Log #7 will rest on the two voids of Log #2 and Log #6 as shown in Figure 10, install log by placing it on top of these voids. Place the log so that the bark detail faces the back wall of the firebox. See Figure 11.

Figure 11. Install Log #7

10. **LOG #8:** Log #8 will rest on the flat surface of Log #2 as shown in Figure 12. The right end of Log #8 will rest on the base pan and contact the hand bend tab indicated in Figure 12.

Figure 12. Install Log #8

11. This product is shipped with a bag of Lava Rock. Approximately one third of the bag will be used for initial setup, the remainder should be placed in the manual bag assembly and left with the homeowner. Do not store beneath the appliance. Install Lava Rock by placing it (by hand) in the locations denoted by arrows in Figure 13. Care should be taken to avoid placing lava rock on the burner.

***NOTICE: DO NOT** place lava rock on burner. Flame appearance could be affected.*

Figure 13. Lava Rock Locations

2414-935B

E. IntelliFire Touch® Control System Setup

- Detailed instructions for electrical wiring and connections are provided in Section 8.
- Determine if this appliance is equipped with a Module Reset Switch. See Section 8. Verify this switch is in the ON position.
- Verify that the 3-Position switch on the IFT-ECM is switched to the REMOTE position. Detailed Operating Instructions for the IFT-ECM are provided in Section 3.K of the Owner's Manual.

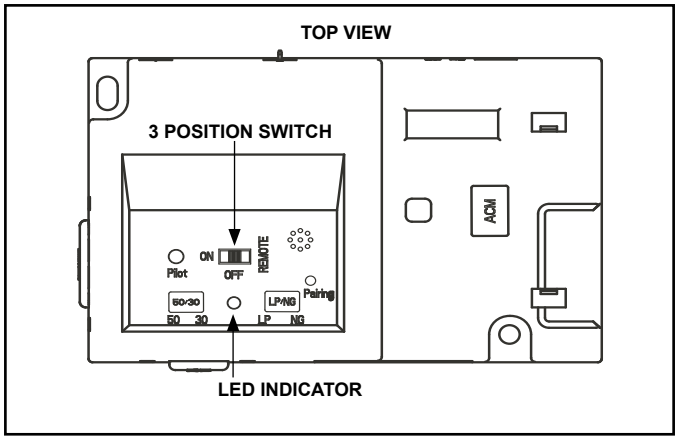

Figure 11.1 IFT-ECM

If this appliance is being upgraded to an optional IntelliFire Touch Remote Control, and/or optional power vent, fan, or light kit are added as new accessory upgrade(s) to fireplace:

1. The RC400 remote will need to be paired to the ECM.
2. Follow the installation instructions provided with the IntelliFire Touch remote and/or accessory kit(s).

F. Fixed Glass Assembly Removal and Replacement

WARNING! Risk of Asphyxiation! *Handle fixed glass assembly with care. Inspect the gasket to ensure it is undamaged and inspect the glass for cracks, chips or scratches.*

- ***DO NOT*** *strike, slam or scratch glass.*
- ***DO NOT*** *operate fireplace with glass removed, cracked, broken or scratched.*
- *Replace as a complete assembly.*

Removing Fixed Glass Assembly

- Remove decorative barrier front from fireplace and set aside on work area.
- Pull the four glass assembly latches out of the groove on the glass frame. Remove glass assembly from the appliance. See Figure 11.2.

Replacing Fixed Glass Assembly

- Replace the glass assembly on the appliance. Pull out and latch the four glass assembly latches into the groove on the glass frame.
- Clean glass with a non-abrasive commercially available cleaner.
  - Light deposits: Use a soft cloth with soap and water
  - Heavy deposits: Use commercial fireplace glass cleaner (consult with your dealer)
- Carefully set fixed glass assembly in place on fireplace. Hold glass in place with one hand and secure glass latches with the other hand.
- Inspect and operate all glass latches to ensure they move freely and no obstructions are present.
- Reinstall decorative barrier front.

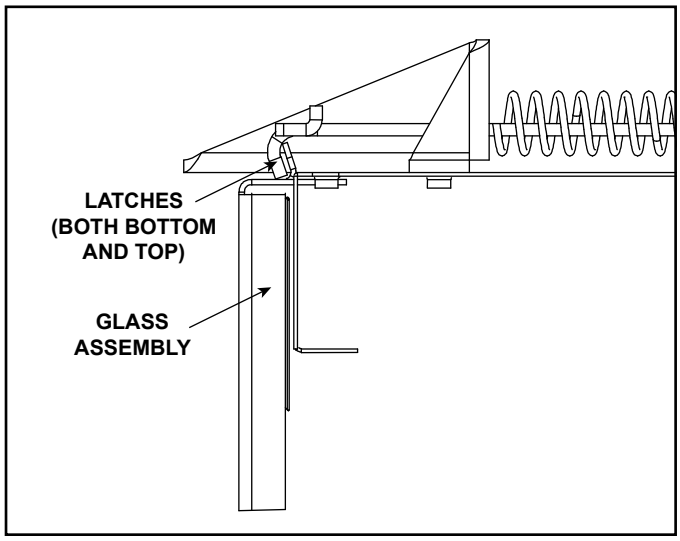

Figure 11.2 Fixed Glass Assembly

G. Install Majestic Decorative Barrier Front and Hood

WARNING! Risk of Fire! *Install ONLY decorative barrier fronts approved by Hearth & Home Technologies. Unapproved decorative barrier fronts could cause fireplace to overheat.*

IMPORTANT! This fireplace requires an installed decorative barrier front to prevent direct contact with the hot viewing glass. DO NOT operate the fireplace with the barrier removed.

Contact your dealer or Hearth & Home Technologies if the barrier is not present or help is needed to properly install one.

1. Remove decorative barrier front by lifting up and away from appliance.
2. Remove four shoulder bolts from manual bag assembly and install as shown in Figure 11.3.
3. Hang decorative barrier front onto shoulder bolts.
4. Install hood on appliance by inserting into the two hood clips. See Figure 11.3.

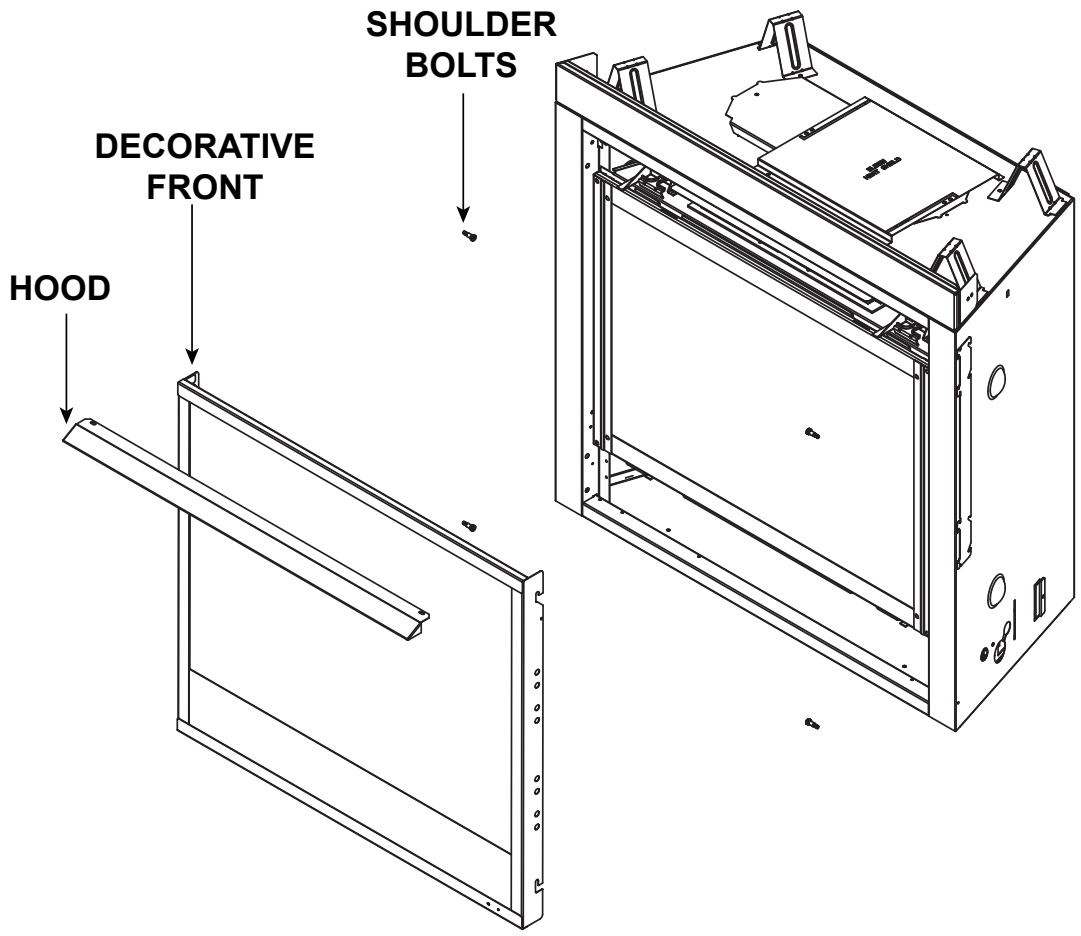

Figure 11.3 Install Majestic Decorative Barrier front and Angled Hood

A. Vent Components Diagrams

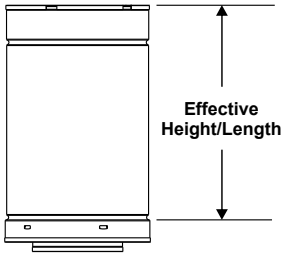

DVP Pipe (see chart)

Pipe	Effective Length	
	Inches	Millimeters
DVP4	4	102
DVP6	6	152
DVP12	12	305
DVP24	24	610
DVP36	36	914
DVP48	48	1219
DVP6A	3 to 6	76 to 152
DVP12A	3 to 12	76 to 305

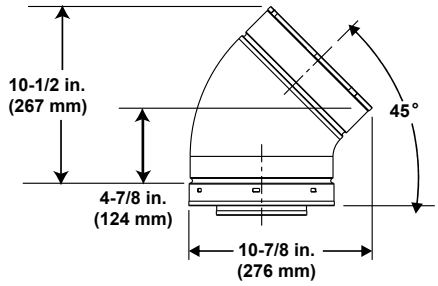

DVP45 (45º Elbow)

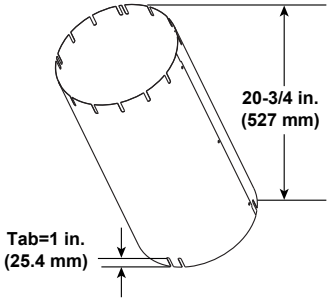

Finished Height: 19-3/4 in./502 mm
UNIV-AS2 (Attic Insulation Shield)

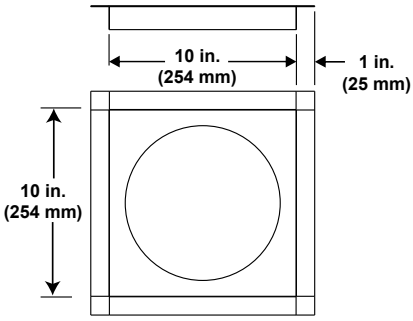

DVP-FS (Ceiling Firestop)

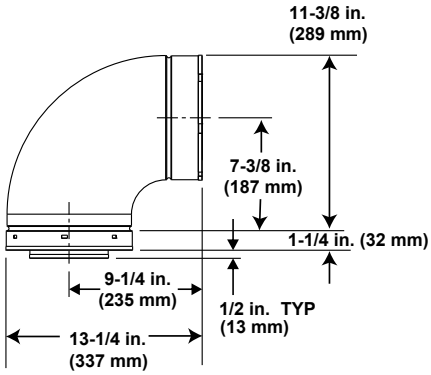

DVP90ST (90° Elbow)

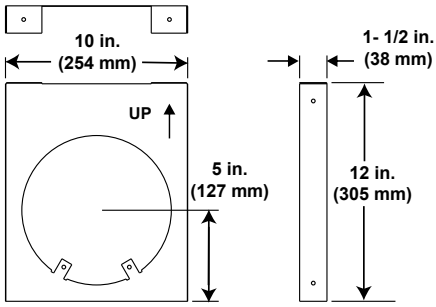

DVP-HVS (Vent Support)

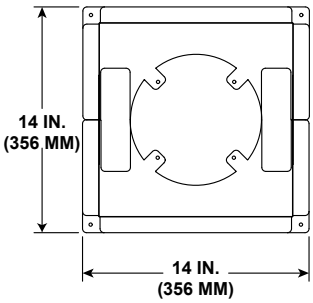

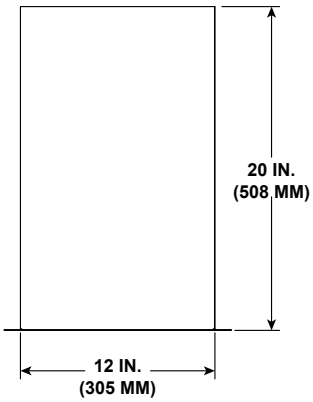

DVP-RDS
ROOF DECK INSULATION SHIELD

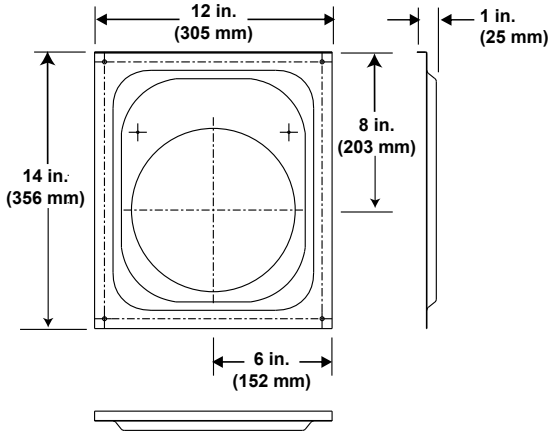

DVP-WS (Wall Shield Firestop)

Figure 12.1 DVP Vent Components

A. Vent Components Diagrams (*continued*)

Note: Heat shields MUST overlap by a minimum of 1-1/2 in. (38 mm). **The heat shield is designed to be used on a wall 4 in. to 7-1/4 in. (102 mm to 184 mm) thick.** If wall thickness is less than 4 in. (102 mm) the existing heat shields must be field trimmed. If wall thickness is greater than 7-1/4 in. (184 mm) a DVP-HSM-B will be required.

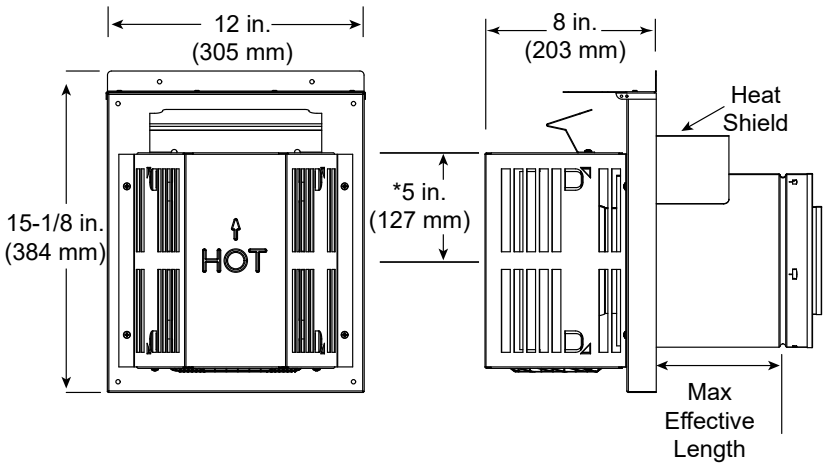

DVP-TRAP
Horizontal Termination Cap

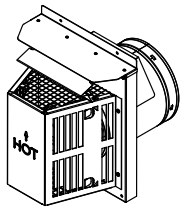

* Center of the horizontal vent pipe to the vertical measuring surface.

Term Cap	Minimum Effective Length	Maximum Effective Length
Trap1	3-1/8 in.	4-5/8 in.
	79 mm	117 mm
Trap2	5-3/8 in.	9-3/8 in.
	137 mm	238 mm

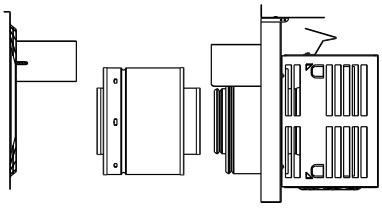

DVP-TRAP1

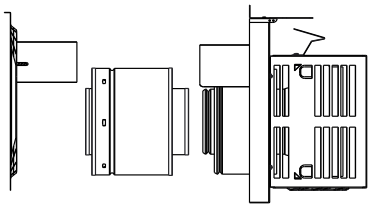

DVP-TRAP2

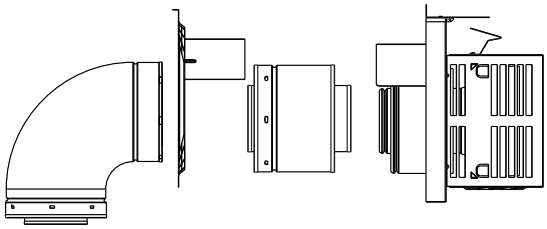

DVP-TRAPK1

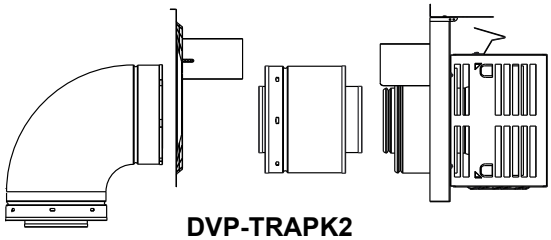

DVP-TRAPK2

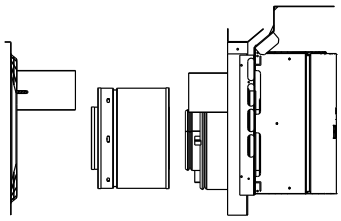

DVP-HPC1
Can adjust 2-1/8 in. (4-1/4 to 6-3/8)

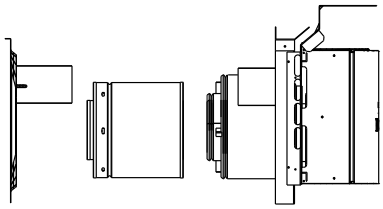

DVP-HPC2
Can adjust 4-1/8 in. (6-3/8 to 10-1/2)

➔ **Figure 12.2 DVP Vent Components**

A. Vent Components Diagrams (*continued*)

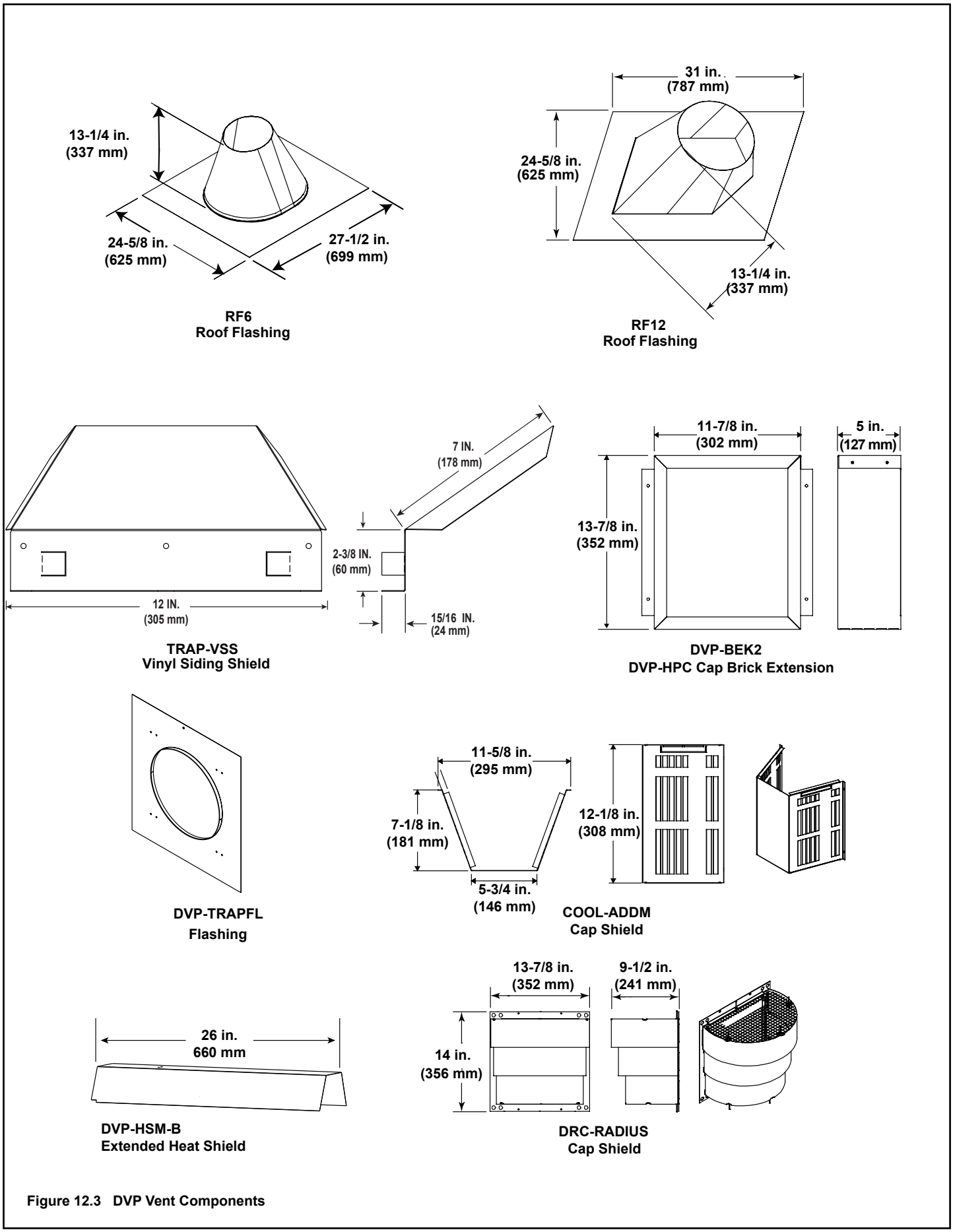

Figure 12.3 DVP Vent Components

A. Vent Components Diagrams (*continued*)

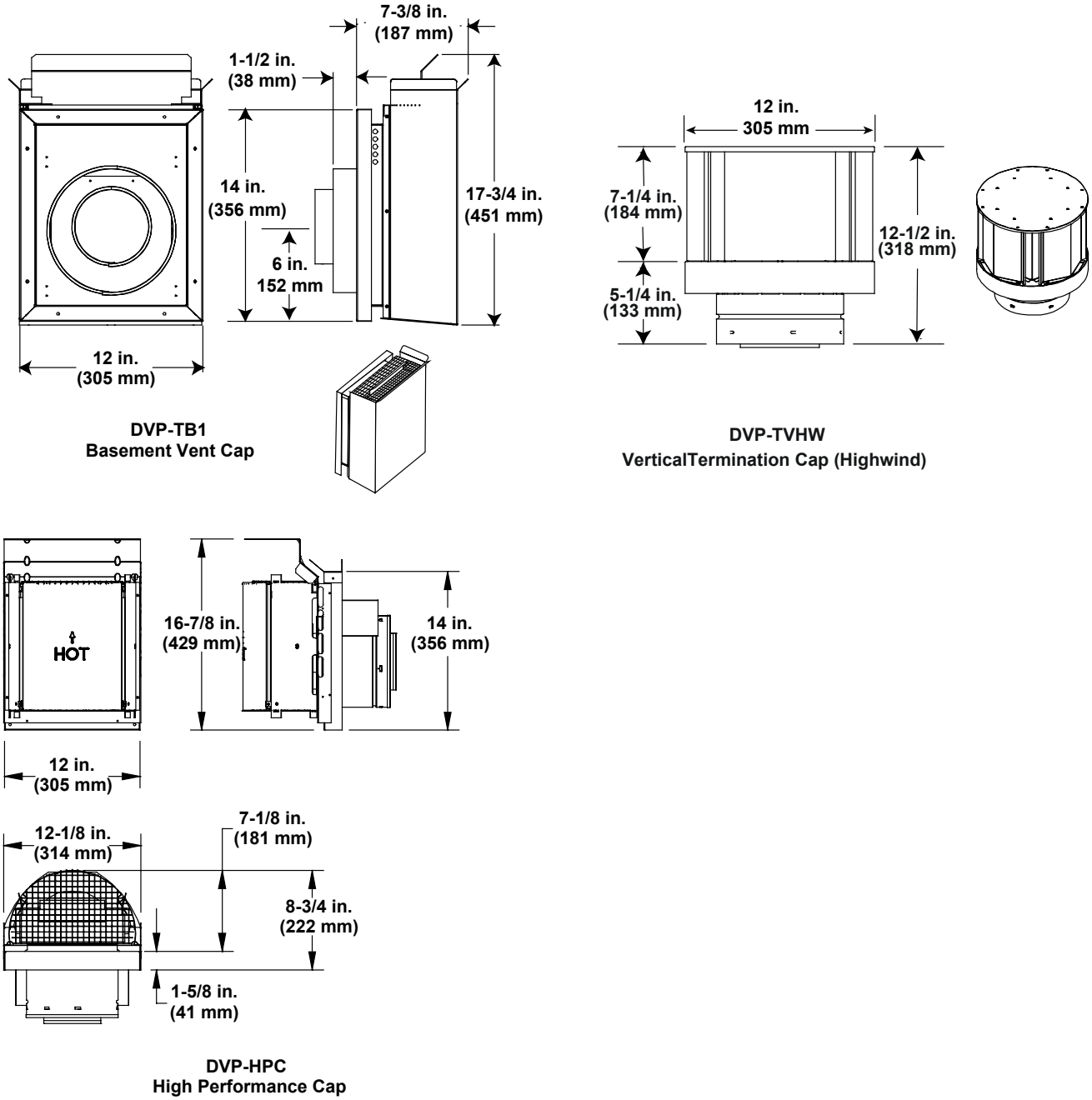

Figure 12.4 DVP Vent Components

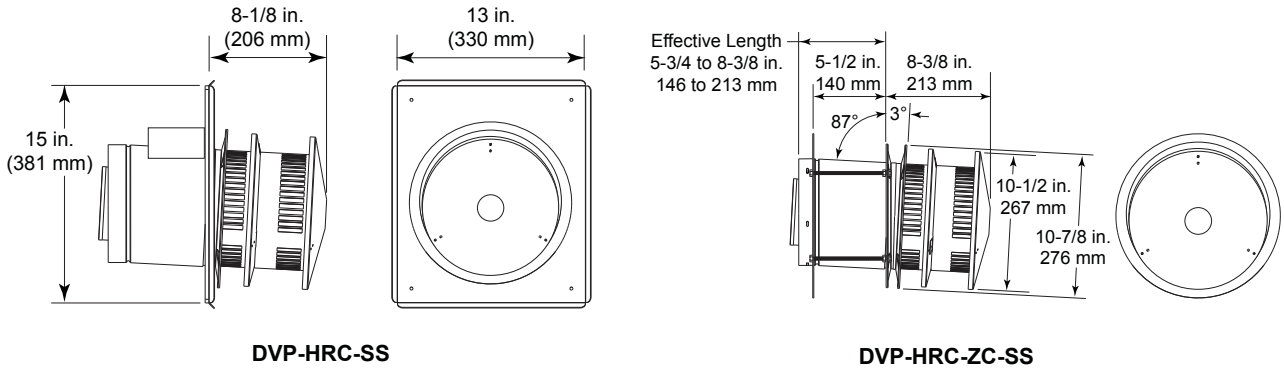

Figure 12.5 Vent Components

DECORATIVE TERMINATIONS/SHROUDS

Only use listed decorative termination caps/shrouds with Hearth & Home Technologies approved venting systems.

This applies to both DVP and SLP venting systems.

Decorative Terminations Caps/Shrouds

DTO134
DTO146
DTS134
DTS146
LDS33
LDS46
LDS-BV

A. Vent Components Diagrams *(continued)*

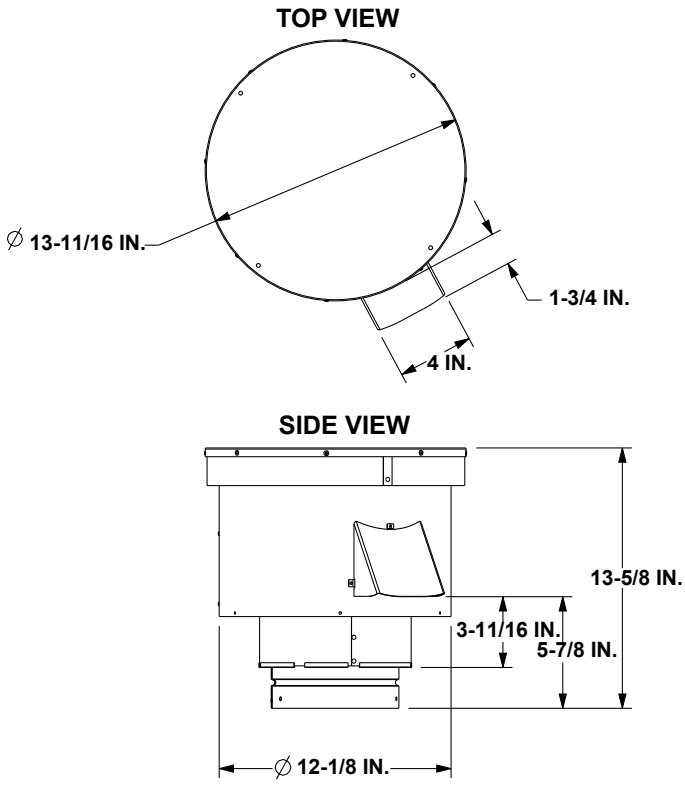

PVV-SLP
Vertical Power Vent

Required Wire Harness and PVV-SLEEVE	
Lengths Available	**Part Number**
10 ft. PV Wire Harness	PVI-WH10
20 ft. PV Wire Harness	PVI-WH20
40 ft. PV Wire Harness	PVI-WH40
60 ft. PV Wire Harness	PVI-WH60
80 ft. PV Wire Harness	PVI-WH80
100 ft. PV Wire Harness	PVI-WH100
Description	**Part Number**
12 in. Wire Harness Sleeve	PVV-SLEEVE-12
48 in. Wire Harness Sleeve	PVV-SLEEVE-48

Note: A wire harness is required to power the PVV-SLP and connect it to the appliance. It is ordered separately from the PVV-SLP. Contact your dealer to order.

Note: The PVV-SLEEVE-12 and/or PVV-SLEEVE-48 is required to be installed with the PVV-SLP. It is ordered separately from the PVV-SLP. Contact your dealer to order.

Note: The PVV-SLP requires one of the following options to be installed on this appliance.
Option A: IFT-RC400 and/or IFT-WFM, IFT-ACM and IntelliFire App that can be downloaded from the app store.
OR
Option B: IFT-RC150, IFT-ACM, IFT-WFM and an IntelliFire App that can be downloaded from the app store.
These accessories are purchased separately from the PVI-SLP-B. Contact your dealer to order.

Figure 12.6 PVV-SLP Vent Components

A. Vent Components Diagrams *(continued)*

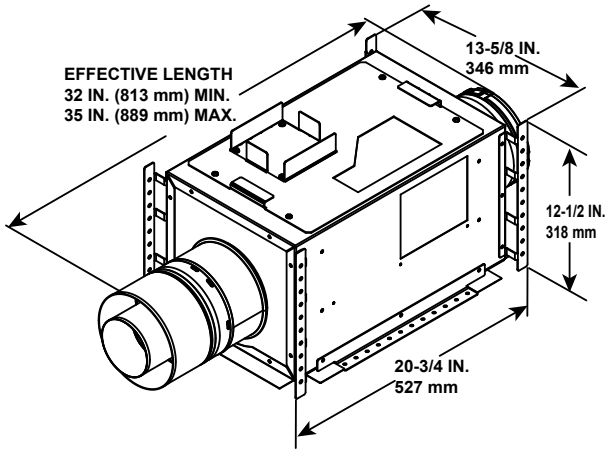

PVI-SLP-B
Power Vent Inline

Optional Wire Harness	
DESCRIPTION	**PART NUMBER**
10 FT PV Wire Harness	PVI-WH10
20 FT PV Wire Harness	PVI-WH20
40 FT PV Wire Harness	PVI-WH40
60 FT PV Wire Harness	PVI-WH60
80 FT PV Wire Harness	PVI-WH80
100 FT PV Wire Harness	PVI-WH100

Note: Wire harnesses required to power the PVI-SLP-B connect to the appliance and are ordered separately from PVI-SLP-B. Contact your dealer to order.

Note: The PVI-SLP-B requires one of the following options to be installed on this appliance.
Option A: IFT-RC400 and/or IFT-WFM, IFT-ACM and IntelliFire App that can be downloaded from the app store.
OR
Option B: IFT-RC150, IFT-ACM, IFT-WFM and an IntelliFire App that can be downloaded from the app store.
These accessories are purchased separately from the PVI-SLP-B. Contact your dealer to order.

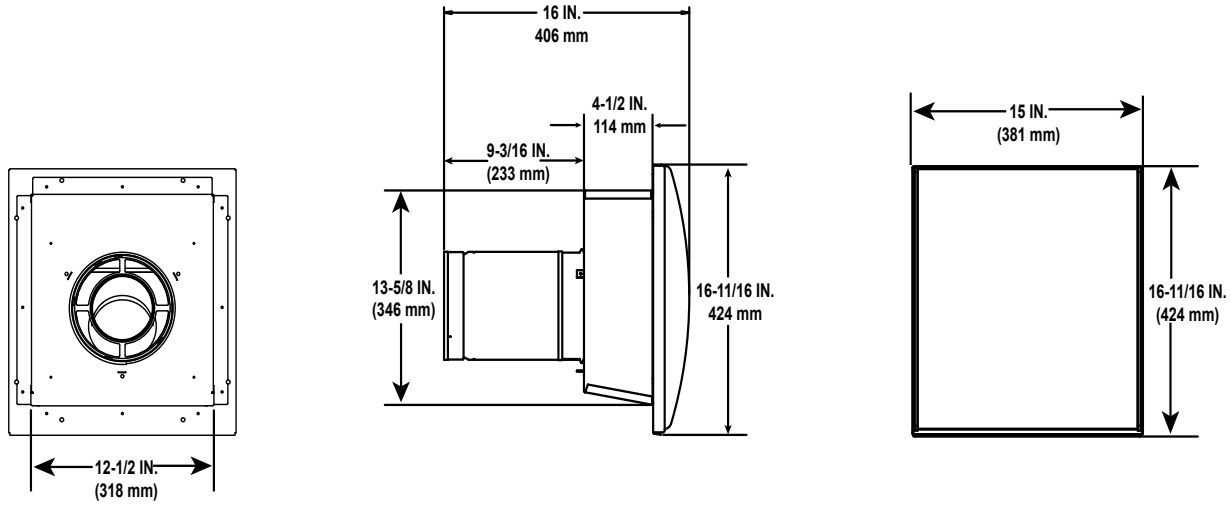

SLP-LPC
SLP Low Profile Cap
(Approved for use with PVI-SLP-B only)

Figure 12.7 PVI-SLP-B Vent Components

A. Vent Components Diagrams *(continued)*

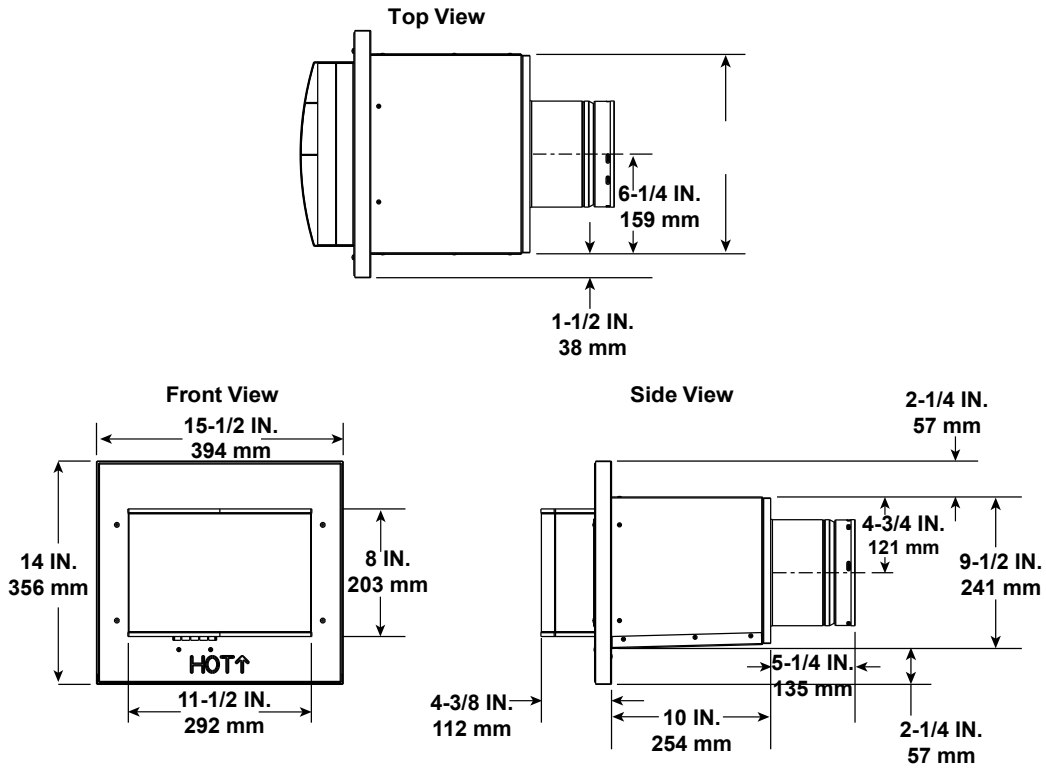

PVLP-SLP
Power Vent Low Profile

Note: Wire harnesses required to power the PVLP-SLP connect to the appliance and are ordered separately from PVLP-SLP. Contact your dealer to order.

Note: A PVLP-HS heat shield is available and sold separately. Use if the PVLP-SLP is installed in a high traffic area.

Note: The PVLP-SLP requires one of the following options to be installed on this appliance.
Option A: IFT-RC400 and/or IFT-WFM, IFT-ACM and IntelliFire App that can be downloaded from the app store.
OR
Option B: IFT-RC150, IFT-ACM, IFT-WFM and an IntelliFire App that can be downloaded from the app store.
These accessories are purchased separately from the PVI-SLP-B. Contact your dealer to order.

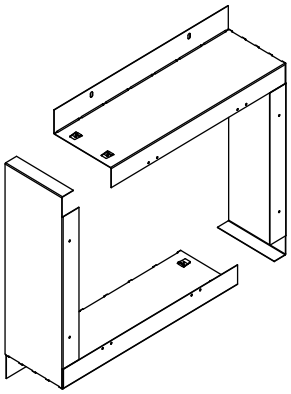

PVLP-BEK
Brick Kit

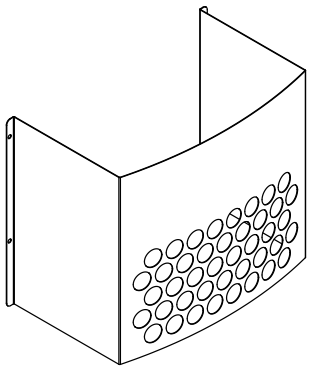

PVLP-HS
Heat Shield

Required Wire Harness	
DESCRIPTION	**PART NUMBER**
10 FT PV Wire Harness	PVI-WH10
20 FT PV Wire Harness	PVI-WH20
40 FT PV Wire Harness	PVI-WH40
60 FT PV Wire Harness	PVI-WH60
80 FT PV Wire Harness	PVI-WH80
100 FT PV Wire Harness	PVI-WH100

Figure 12.8 PVLP-SLP Vent Components

A. Vent Components Diagrams *(continued)*

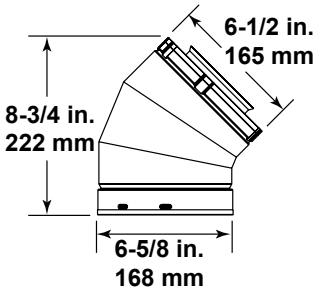

SLP45
45° Elbow

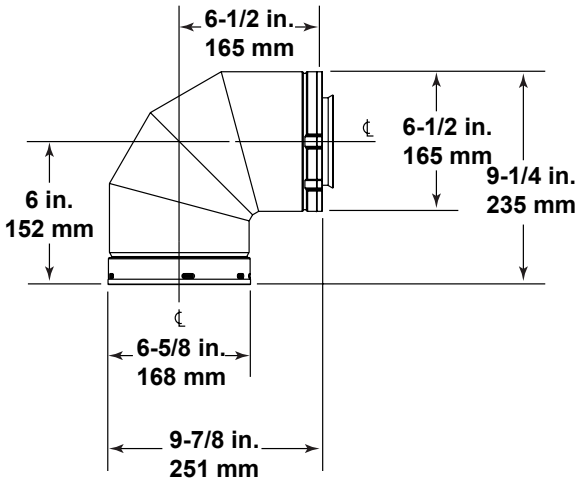

SLP90
90° Elbow

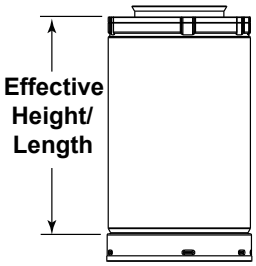

SLP PIPE

Effective Height/Length

Pipe	*inches*	*mm*
SLP4	4	102
SLP6	6	152
SLP12	12	305
SLP24	24	610
SLP36	36	914
SLP48	48	1219
SLP6A	2 - 6	51 - 152
SLP12A	2 - 12	51 - 305
SLP-FLEX-3	36	914
SLP-FLEX-5	60	1524
SLP-FLEX-10	120	3048

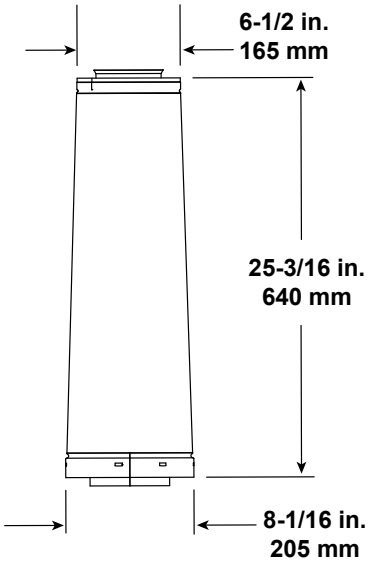

DVP-SLP24
Adapter

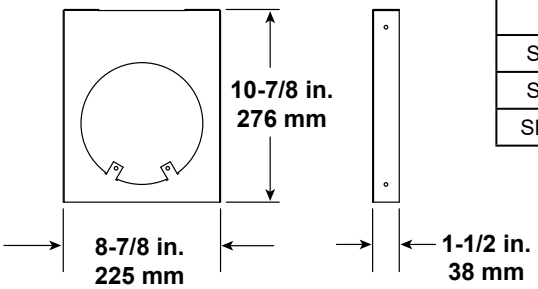

SLP-HVS
Horizontal Pipe
Support

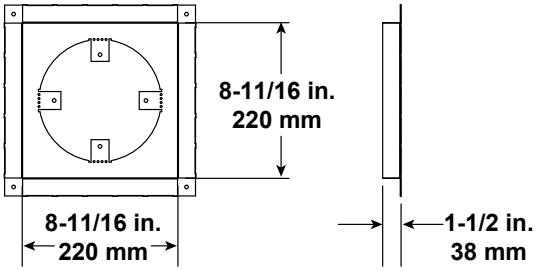

SLP-FS
Ceiling Firestop

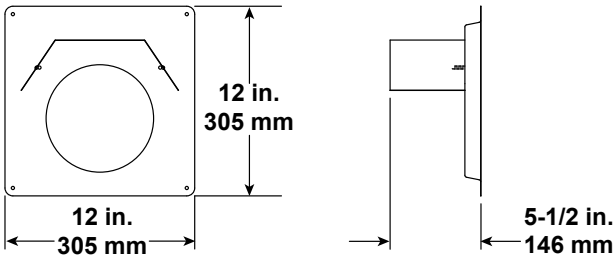

SLP-WS
Wall Shield Firestop

Figure 12.9 SLP Series Vent Components

A. Vent Components Diagrams *(continued)*

Note: Heat shields MUST overlap by a minimum of 1-1/2 in. (38 mm). The heat shield is designed to be used on a wall 4 in. to 7-1/4 in. (102 mm to 184 mm) thick. If wall thickness is less than 4 in. (102 mm) the existing heat shields must be field trimmed. If wall thickness is greater than 7-1/4 in. (184 mm) a DVP-HSM-B will be required.

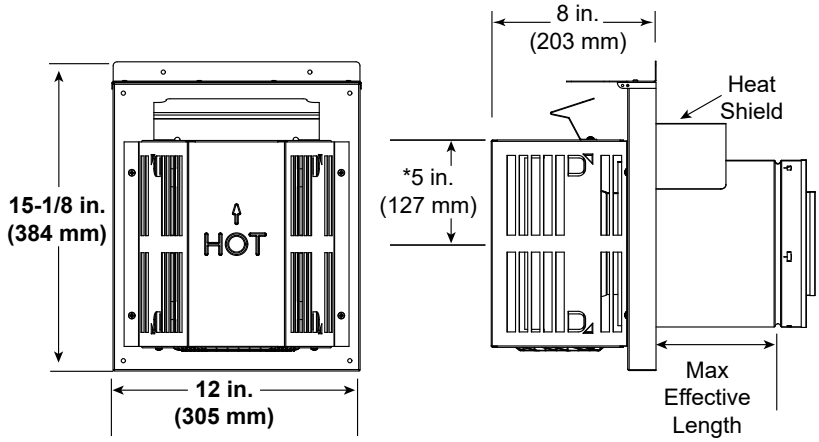

SLP-TRAP
Horizontal Termination Cap

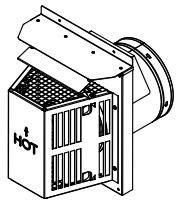

* Center of the horizontal vent pipe to the vertical measuring surface.

Term Cap	Minimum Effective Length	Maximum Effective Length
Trap1	3-1/8 in.	4-3/4 in.
	79 mm	121 mm
Trap2	5-1/4 in.	9-1/4 in.
	133 mm	235 mm

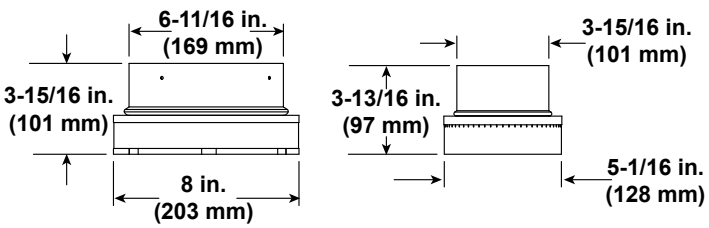

SL-2DVP
Adapter

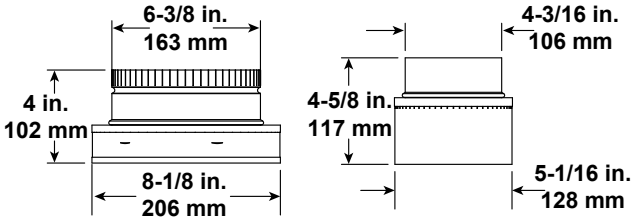

DVP-2SL
Adapter

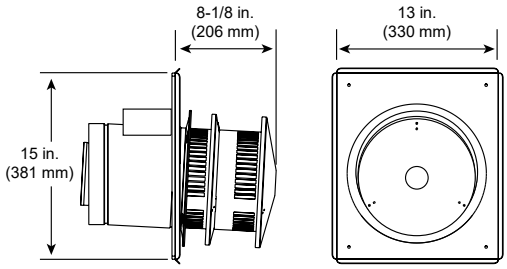

SLP-HRC-SS
Horizontal Termination Cap

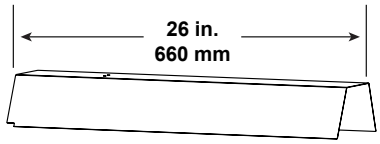

DVP-HSM-B
Extended Heat Shield

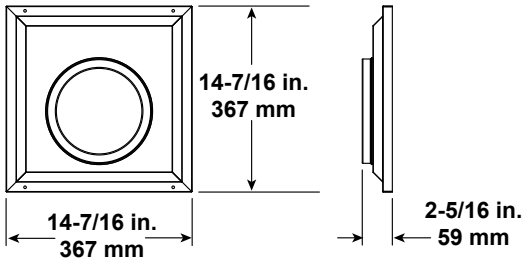

SLP-WT-BK
Wall Thimble-Black

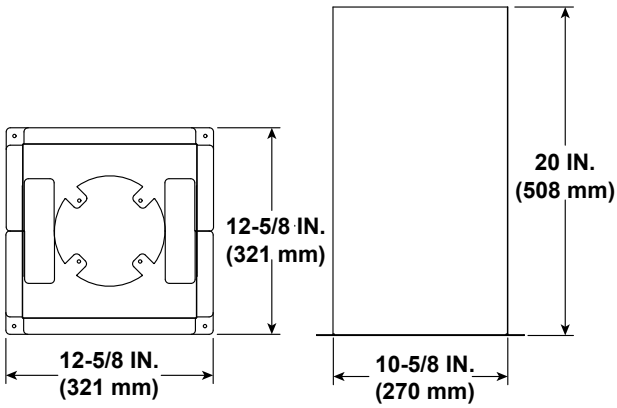

SLP-RDS
ROOF DECK INSULATION SHIELD

➔ **Figure 12.10 SLP Series Vent Components**

A. Vent Components Diagrams *(continued)*

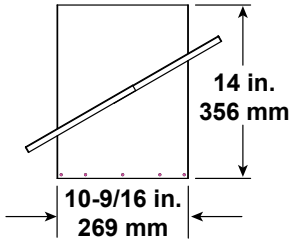

SLP-CCS-BK
Cathedral Ceiling
Support Box-Black

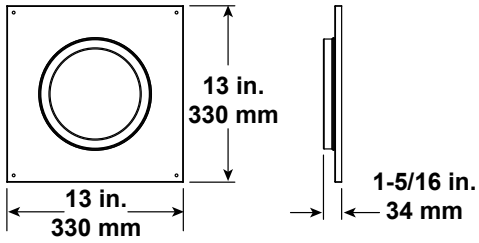

SLP-DCF-BK
Ceiling Firestop
Black

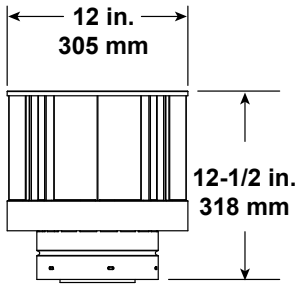

SLP-TVHW
Vertical
Termination Cap

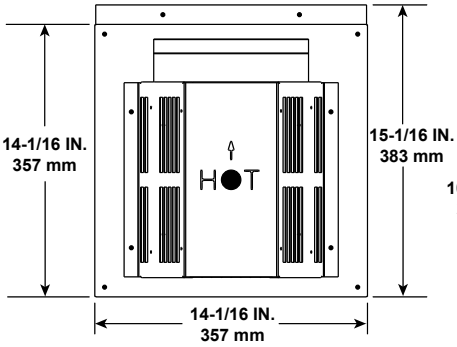

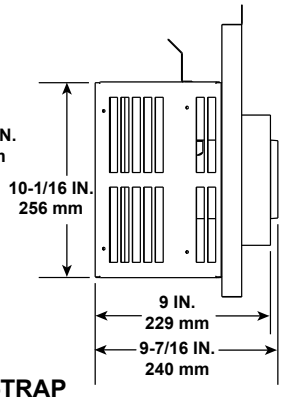

SLP-FLEX-TRAP
Horizontal
Termination Kit

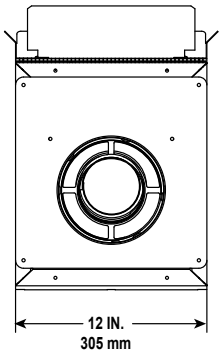

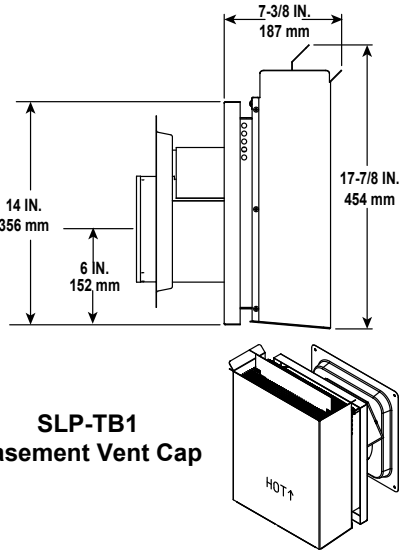

SLP-TB1
Basement Vent Cap

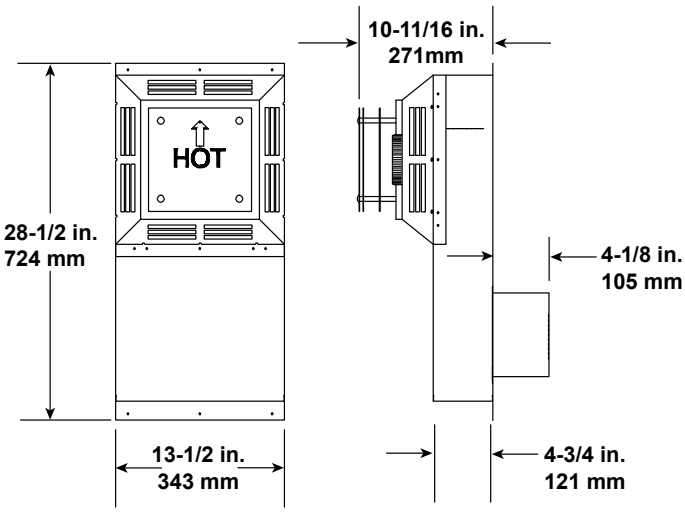

SLK-SNKD
Snorkel
Termination Cap

Figure 12.11 SLP Series Vent Components

A. Vent Components Diagrams *(continued)*

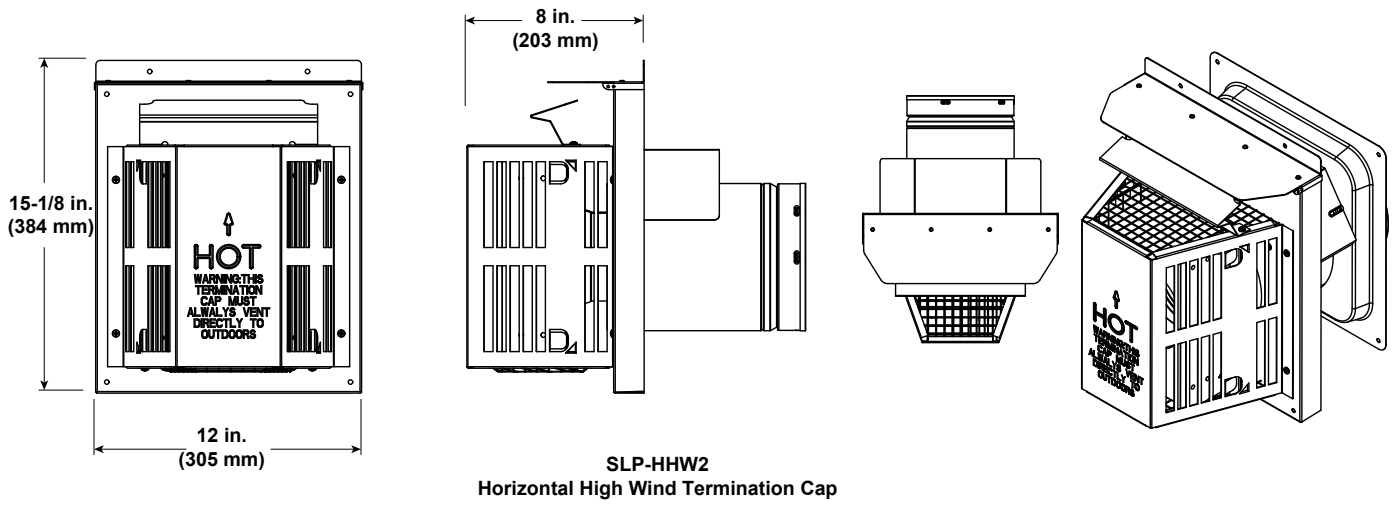

Figure 12.12 SLP series Vent Components

COAXIAL to COLINEAR VENTING

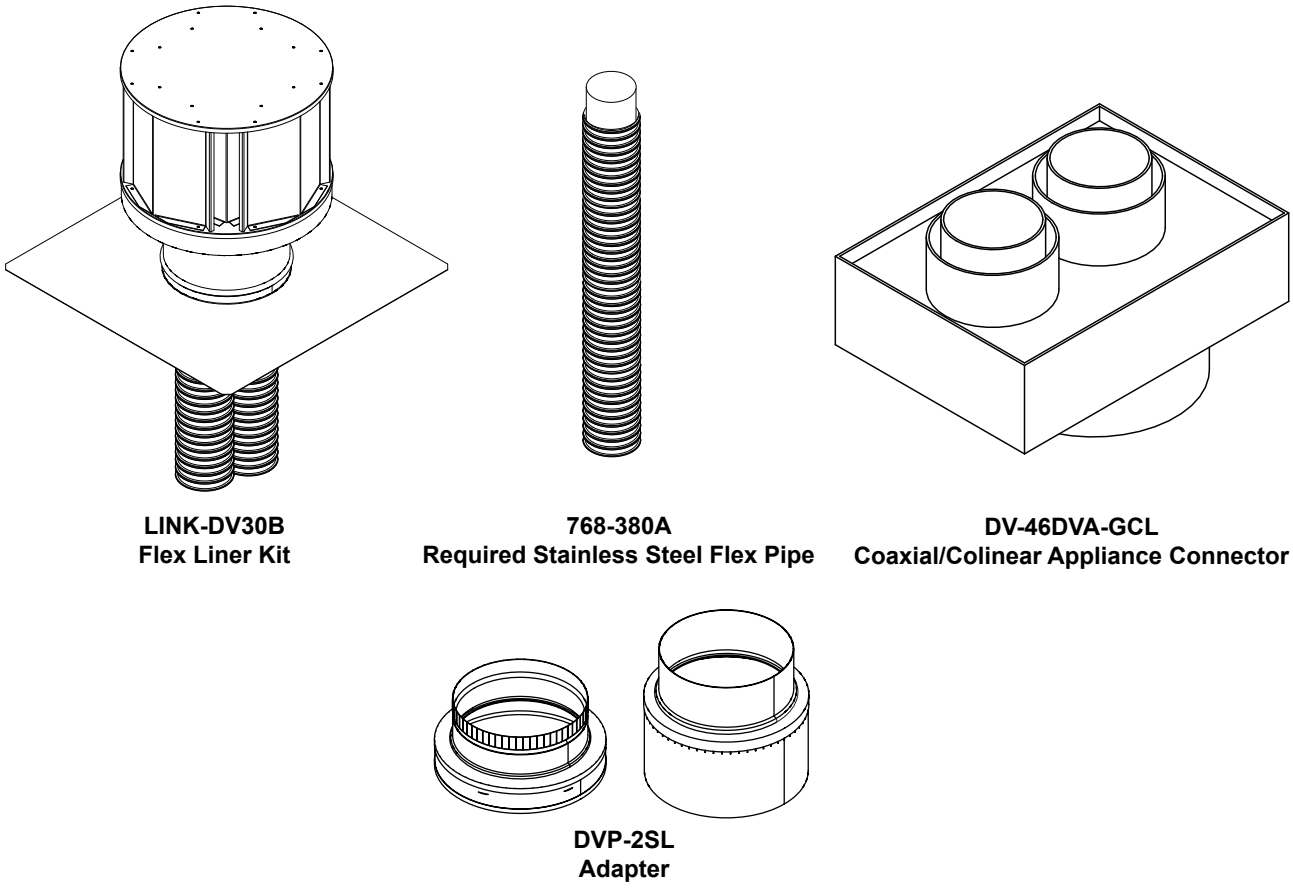

Figure 12.13 Coaxial to Colinear Vent Components

B. Accessories

Install approved accessories per instructions included with accessories. Contact your dealer for a list of approved accessories.

WARNING! Risk of Fire and Electric Shock! *Use ONLY Hearth & Home Technologies-approved optional accessories with this appliance. Using non-listed accessories could result in a safety hazard and will void the warranty.*

Remote Controls, Wall Controls and Wall Switches

After a qualified service technician has installed the remote control, wall control or wall switch, follow the instructions supplied with the control installed to operate your appliance:

For safety:

- Install a switch lock or a wall/remote control with child protection lockout feature.
- Keep remote controls out of reach of children.

Contact your dealer if you have questions.

Optional IntelliFire Wi-Fi module with IntelliFire App

After a qualified service technician has installed the IntelliFire Wi-Fi module with the IntelliFire app, follow the instructions supplied to operate your appliance. Contact your dealer if you have questions.

Optional Heat Management Systems Kits

After a qualified service technician has installed the heat management system, follow the instructions supplied with the kit for operation. Contact your dealer if you have questions.

Note: Optional heat management systems kit must be installed while the sides of the appliance are accessible.

Optional Fan

After a qualified service technician has installed the fan, follow the instructions supplied with the fan kit to operate your fan. See your dealer if you have questions.

Optional Refractory Kit

An optional refractory kit is available for these models. Follow the instructions supplied with the kit for installation. Contact your dealer if you have questions.

Optional Glass Media Kit

An optional glass media kit is available for these models. Follow the instructions supplied with the kit for installation. Contact your dealer if you have questions.

Optional Contemporary Kit

If desired, a contemporary kit may be added to the QUARTZ32IFTN/QUARTZ32IFTL or QUARTZ36IFTN/QUARTZ36IFTL. Contact your dealer to order the contemporary kit.

Majestic, a brand of Hearth & Home Technologies
7571 215th Street West, Lakeville, MN 55044

Printed in U.S.A. - Copyright 2023