Thank you for your purchase!

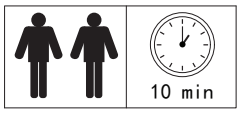

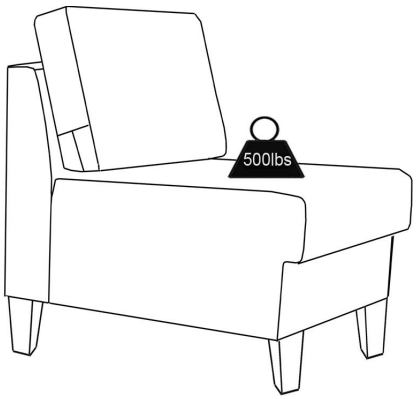

Center Reception Seat with Solid Wood Legs

ASSEMBLY INSTRUCTIONS

Before You Begin:

Please identify all component parts and hardware pieces required before you begin. Carefully remove all of the components from the packaging and set aside for assembly. Assemble on a soft surface to prevent scratching during assembly.

Caution:

Tighten all components securely before use. Failure to do so may result in personal injury.
DO NOT use any sharp objects to open plastic wrapped components as damage to product or components may result.

Warning:

CHOKING HAZARD - Small Parts. Adult Assembly Required.

Injury may result from tipping furniture. You must install the Tipping Restraint Hardware with the unit to prevent the unit from tipping and causing any accidental injury, instability, death or damage. The tipping restraint is intended only as a safety measure, it is not a substitute for proper adult supervision.

This tipping restraint is not an earthquake restraint. If you wish to add the extra security of earthquake restraints, they must be purchased and installed separately.

Serious or fatal crushing injuries can occur from furniture tipping over. To prevent furniture from tipping over it must be permanently fixed to the wall. Fixing devices for the wall are not included since different wall materials require different types of fixing devices. Use fixing devices suitable for the walls in your home.

Failure to detach this restraint before moving furniture may result in injury or damage.

DO NOT ALLOW CHILDREN TO CLIMB ON FURNITURE

TO REGISTER FOR THE WARRANTY, SCAN THE QR CODE BELOW:

Customer Service Email: CustomerExperience@theubiquegroup.com I Phone: 866-552-2810

196861172182 / 196861172175

Congratulations!

You just purchased a piece of happiness. At Ubique Group, we believe you can transform your spaces into the most inspired places with furnishings that are the perfect combination of form, function and style. As original innovators of online furniture retail, we offer the best selection of popular, contemporary styles at cool, comfortable prices. And, with decades of proven shipping and packaging expertise, our Extended Quality Checklist ensures a rewarding, hassle-free experience time and time again. It's just what you need to bring your vision to life.

Thank you & Enjoy!!

your friends at Ubique Group

LIKE IT!

Share it on social & Tell a friend! #Spaces2Places

LOVE IT!

Write an online product review where purchased

NOT SURE?

Let us help! Contact our customer support.

Have a question, concern or simply need a hand? Your satisfaction is our top priority.
Contact us at 866-552-2810 or customerexperience@theubiquegroup.com. We're here to help!

Browse Our Branded Collections

There's something for everyone inside our family of brands.

FLASH FURNITURE®

MERRICK | LANE

Taylor & Logan

Emma+Oliver®

MASADA RUGS

HBCY CREATIONS

BlackArc®

Visit www.theubiquegroup.com/brands or scan this code.

ubique.
GROUP

We pride ourselves on providing an excellent customer experience starting right here with your package and instructions. Everything you need should be right where you need it, so you can get to enjoying your new item ASAP. But despite our best efforts, sometimes "slips happen." If you need any support, from replacement parts to recommendations, please reach out to our wonderful customer support team at 866-552-2810 or customerexperience@theubiquegroup.com. We're here to help!

EVERY UBIQUE GROUP PRODUCT

Quality & Durability Tested

Packaged with Care

Shipped from our U.S. Facility

Designed for Easy Assembly

Ethically Sourced

Please visit https://www.theubiquegroup.com/warranty for complete warranty information.

Read this manual before using this product. Failure to follow the instructions and safety precautions in this manual can result in serious injury or death. Keep this manual in a safe location for future reference.

PARTS

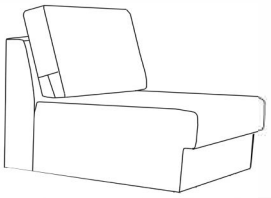

Soft part packed in master-carton

20pcs Bolts+1pc Allen Wrench+2pcs Locking Connectors+ 4pc Wood Legs packed in a small box inside of the carton

4pc wood legs with adjustable feet

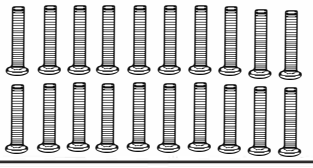

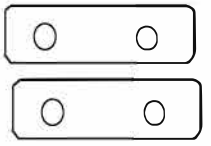

STEP 1: Remove the back cushion and place the chair body upside down on a clean surface to prevent soiling or damage to the upholstery.

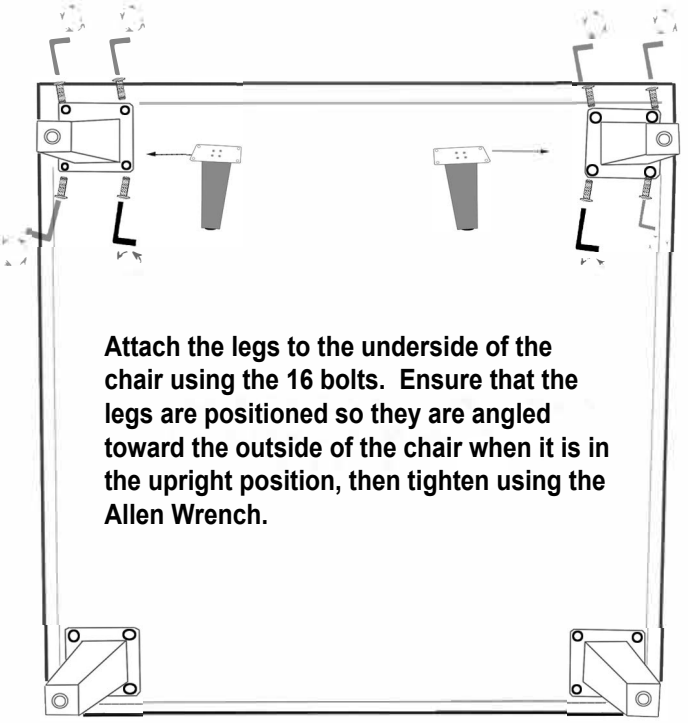

STEP 2:

Turn the chair upright and add the back cushion then adjust the feet to ensure the chair is level.

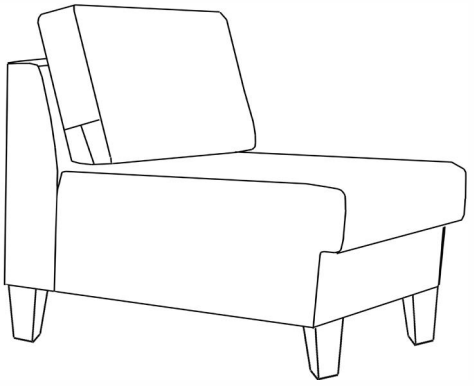

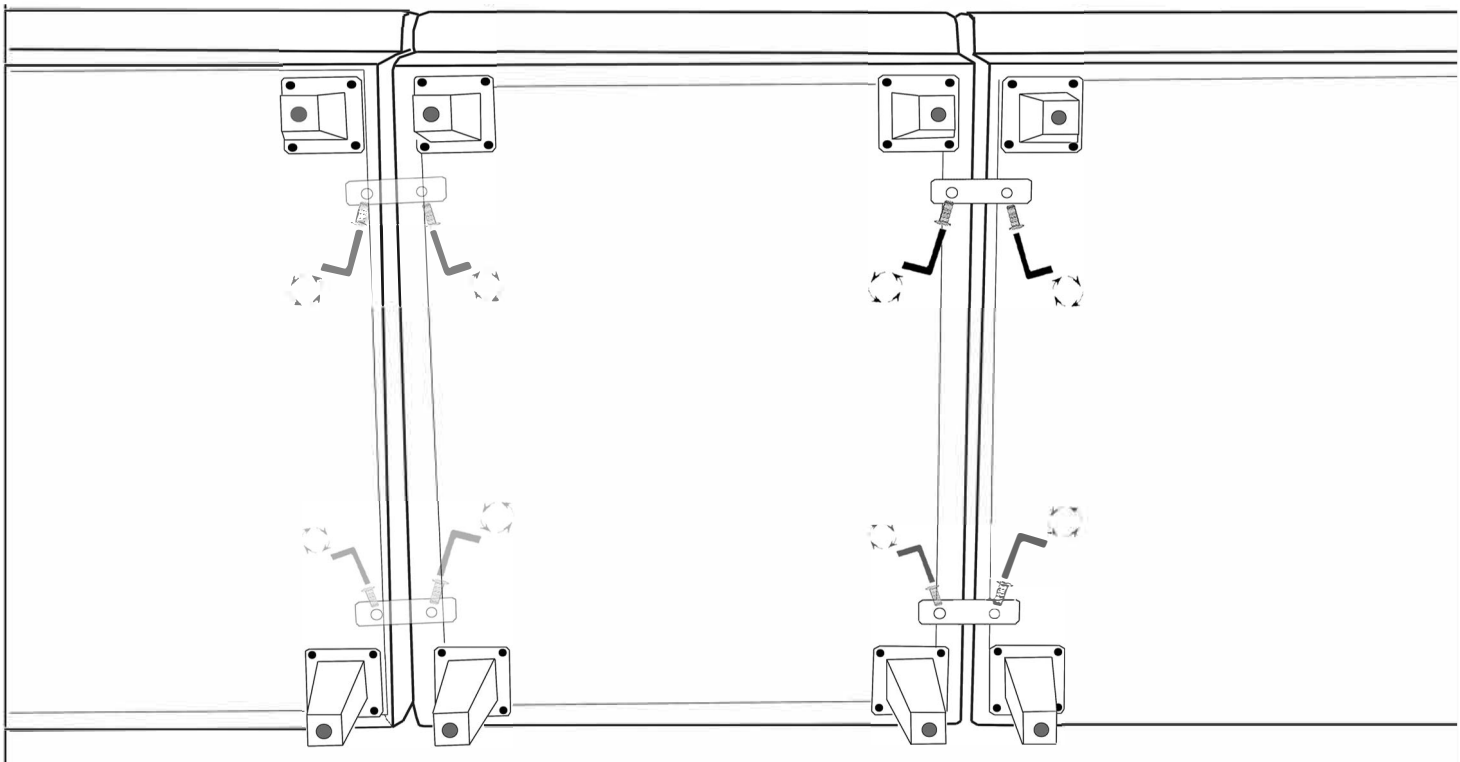

Each modular piece in the collection includes 2 locking connectors

Quality and Safety Guidelines:

- Please follow the static and dynamic weight capacity limits provided on this item. If you are unsure of the weight capacities for this product, email us at customerexperience@theubiquegroup.com or call 866-552-2810.

- Please use this item on a stable, level surface only. All chair legs should contact the flooring surface when used. Do not use this item if any instability is detected.

- This chair is not intended for reclined positions. To prevent accidental tipping, do not push backward or forward while seated.

- For maintenance instructions and replacement parts, please email us at customerexperience@theubiquegroup.com or call 866-552-2810.

- This item is intended for sitting only, do not climb or stand on this item.

- For product longevity, product safety and product integrity, protect from wet weather and store indoors in a dry location. For additional storage instructions, please email us at customerexperience@theubiquegroup.com or call 866-552-2810.

- Please visit www.theubiquegroup.com for our product warranty details or email us at customerexperience@theubiquegroup.com or call 866-552-2810.

- Please review and retain all assembly instructions, safety and quality guidelines and product warnings for future reference.

- Do not slide the sofa forwards, backwards or sideways. Team lifts the sofa when moving it.

- This product is intended for indoor use.

- Please inspect this product regularly to make sure there are no damaged or worn parts. Also inspect to make sure all hardware is tightened correctly and securely. For inspection instructions, please email us at customerexperience@theubiquegroup.com or call 866-552-2810.

- If any parts are damaged or worn, please stop using the product. Repair this product with manufacturer supplied parts only.