SCANDIUM

Makes life easier.

European Quality

Kitchen Appliances

3 YR WARRANTY

Introducing a range of European quality kitchen appliances from a name you can trust.

With more than 35 years of combined experience, Axis Group International have been scouring the globe, selecting high quality kitchen appliances to bring to the Australian and New Zealand market.

We seek out the best brands in Europe, with technology and development at the forefront, and recognised Awards that are peer-driven proof of excellence in the industry.

We are also motivated by a desire to deliver quality manufacturing, with intelligent and innovative design details, that customers will enjoy for a lifetime.

Best of all, we stand by our products with a 3 Year Warranty, supported by our reliable and trusted Service Team.

To explore the range visit
www.scandiumappliances.com.au

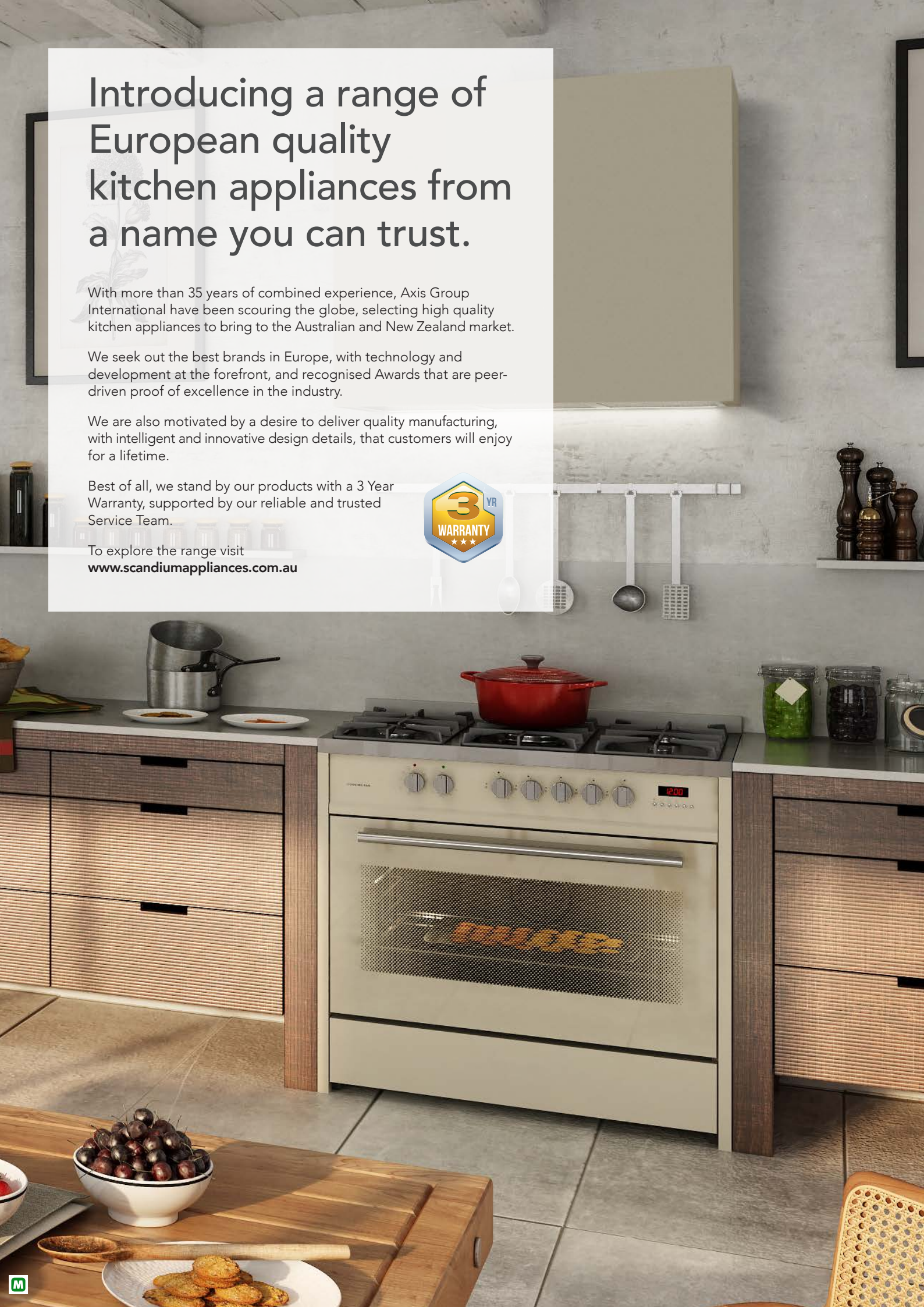

An upright cooker in exciting colours.

121L **UPRIGHT GAS/ELECTRIC FREE-STANDING OVEN** // 90CM
SCU900S/B/CR/PB/DB/LG/R/BG

- 8 Multi-Function Oven
- 5 Burner Gas Cooktop
- Heavy Duty Cast Iron Supports
- Centre Wok Burner
- Programmable Electronic Timer
- Triple Glazed Oven Door
- XL Cavity - 121L Gross
- Easy Clean Enamel
- Twin Fans
- Lower Warming/Storage Compartment
- Child Lock
- Electronic Ignition
- Flame Failure Safety Device

121L

MADE IN EUROPE

3 YR WARRANTY

SCU900S Stainless Steel

SCU900B Black

SCU900CR Cream

SCU900PB Pale Blue

SCU900DB Dark Blue

SCU900LG Light Green

SCU900R Red

SCU900BG Burgundy

OVEN FUNCTIONS:

- Fan Forced
- Fan Assisted
- Fan & Grill
- Grill
- Fan Assist + Bottom Element
- Conventional Oven
- Defrosting
- Light

8 FUNCTION BUILT-IN ELECTRIC OVEN // 60CM SCEO08

- 8 Multi Functions
- Large Capacity, 73L Gross
- Stainless Steel
- Electronic Timer
- Retractable Knobs
- Rapid Pre-Heating
- Defrosting
- Easy Clean Enamel Interior
- Oven Mit Hook on handle
- Enamel Baking Tray
- 2 Grill Racks
- Triple Glazed Door

73L

OVEN FUNCTIONS:

Top/Bottom Element + Fan Assisted | Full Grill | Top Element + Grill | Defrosting (Fan Only) | Bottom Element | Rapid Pre-Heating | Top Element + Grill + Fan | Bottom Element + Fan

10 FUNCTION BUILT-IN ELECTRIC OVEN // 60CM SCEO10

- 10 Multi Functions
- Large Capacity, 73L Gross
- Stainless Steel
- Electronic Timer
- Retractable Knobs
- Rapid Pre-Heating
- Defrosting
- Telescopic Guides
- Side Racks
- Easy Clean Enamel Interior
- Enamel Baking Tray
- 2 Grill Racks
- Triple Glazed Door

73L

OVEN FUNCTIONS:

Top + Bottom Element + Fan Assisted | Full Grill | Top Element + Grill | Defrosting (Fan Only) | Bottom Element | Rapid Pre-Heating | Top Element + Grill + Fan | Bottom Element + Fan | Fan Forced + Circular Element + Bottom Element (Great for Pizza) | Fan Forced + Circular Element

Easy to use appliances with more convenient features ...

GAS COOKTOP // 60CM SCGT60

- Stainless Steel
- 4 Front Control Knobs for easy use
- One-Piece Stainless Steel Hob for easy cleaning
- Flame Failure Safety Device
- Enamel Trivets - Cast Iron Trivets optional
- Automatic Ignition on all Burners
- Available in Natural Gas & LPG jets included

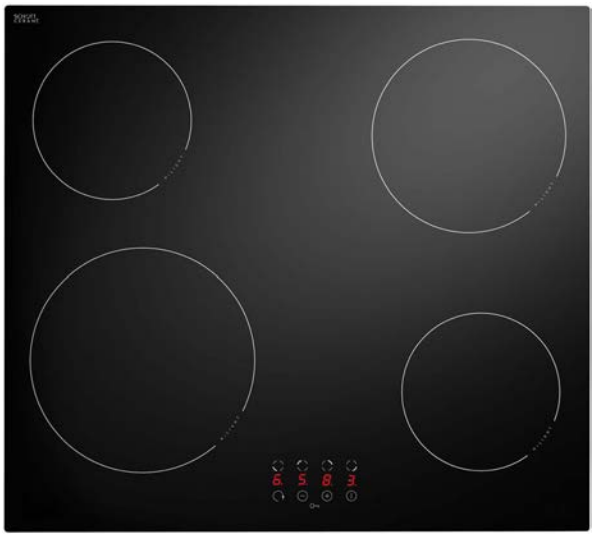

CERAMIC COOKTOP // 60CM SCCN60

- Vitroceramic Cooktop
- Easy Clean Ceramic Glass
- C-Cut Glass Edge Design
- Sensor Control
- Residual Heat Indicator (over 60°C)
- Child Lock
- Automatic Boil
- 4 Hi Light Cooking Zones:
  - 2 x 145mm simmer 1200W burners
  - 1 x 180mm auxiliary 1800W burner
  - 1 x 210mm large 2300W burner

SCHOTT CERAN®

Easy to use, and even more convenient cooking features ...

MICROWAVE // 60CM
SC28LMO

- Large Interior - 28 Litres
- Stainless Steel Interior
- 8 Auto Cooking Menus
- Child Lock
- Glass Tray
- 4 Programs - Defrost By Weight, Defrost by Time, Speedy Cooking & Multi-Stage Cooking
- Led Interior Light
- Grill Rack

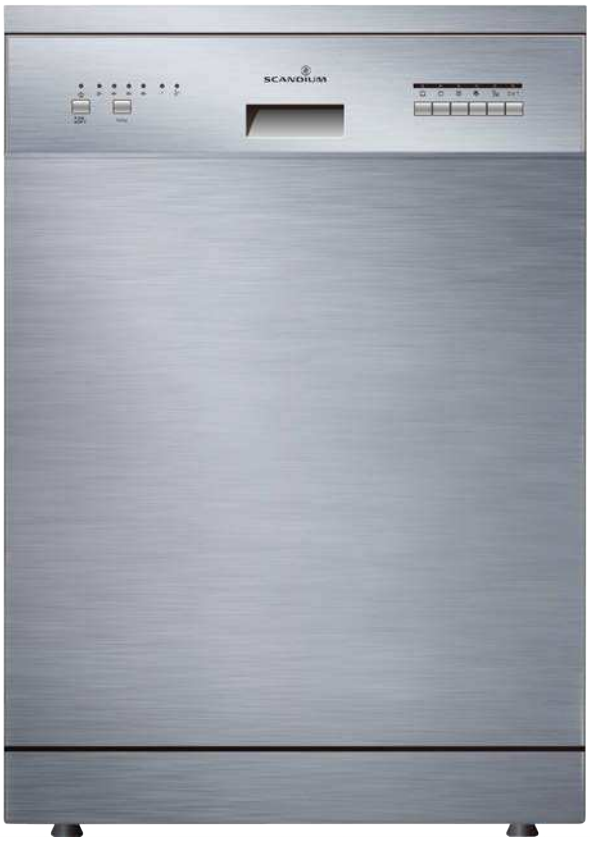

FREESTANDING DISHWASHER // 60CM
SCDW60

- Stainless Steel Front Panel
- Stainless Steel Filter
- Electronic Push Buttons
- Delay Start Function
- Height Adjustable Upper Basket
- 12 Place Settings
- Foldable Bottom Plate Racks
- Detergent & Rinse Aid Dispensers
- 6 Programs - Intensive, 3-in-1, Heavy, Normal, Rinse, & Rapid
- 4 Star WELS Rating
- Residual Drying

The perfect **SILENT** rangehood for your Scandium cooktop.

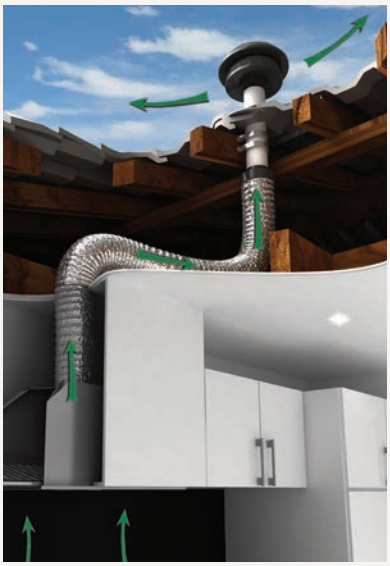

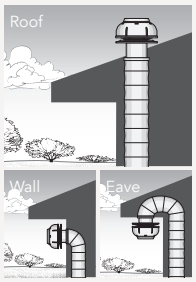

The German built motor silently and efficiently extracts steam, smoke, and odours and expels it externally.

Motor mounts externally in roof, wall or eaves.

SILENT UNDERMOUNT RANGEHOOD // 60CM, 90CM

- Stainless Steel
- Silent, External Motor made in Germany
- Single Speed with Switch Button Controls
- Halogen Lights
- Aluminium, Dishwasher Safe Filters
- Motor & Ducting included - 2 boxes
- Motor Power - 650m^3/hr Airflow (both models)
- Ducting - 150mm flexi-ducting (4m)
- Installs in Roof, Wall or Eave

Image is for illustration purposes only. Motor shown is not an exact product representation.

SILENT SYSTEM | FRESH ODOUR REMOVAL | DUCTING INCLUDED | 3 WARRANTY

Integrated designs for a fresh, clean and stylish kitchen to cook in.

SCUM-6C

SCUM-9C

UNDERMOUNT RANGEHOOD // 60CM, 90CM
SCUM-6C, SCUM-9C

- Stainless Steel Fascia
- 3 Speed with Push Button Controls
- GU 10 Warm LED Lights
- Aluminium, Dishwasher Safe Filters
- Twin Internal Motor [SCUM-6C] - 760m³/hr
- Twin Internal Motor [SCUM-9C] - 900m³/hr

FRESH ODOUR REMOVAL | DUCTING INCLUDED | 3 YR WARRANTY

SCRH60

SLIDE OUT RANGEHOOD // 60CM SCRH60

- Telescopic Slide-out Rangehood - Automatic Start
- Stainless Steel Front Fascia
- 2 Aluminium Grease Filters
- 3 Speed with Button Controls
- Halogen Lights
- Single Internal Motor - 250m³/hr

MADE IN EUROPE | 3 YR WARRANTY

SCU900B **UPRIGHT COOKER** // 90cm

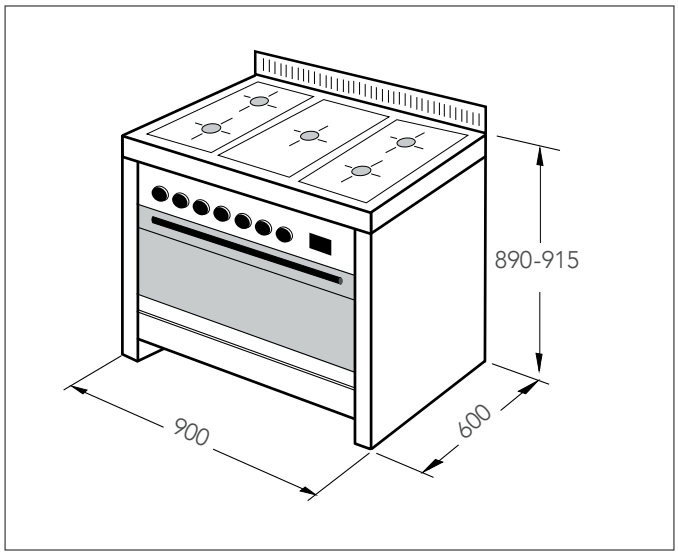

INSTALLATION Oven requires a dedicated 15 amp circuit from socket to main switchboard. Refer your qualified technician to our product manual. Natural Gas and LPG jets supplied.
CLEANING AND MAINTENANCE Easy clean enamel interior. Clean stainless steel using only recommended stainless steel cleaning products. No abrasives, corrosive detergents, bleaches or acids.

SCEO08, SCEO10 **BUILT-IN OVEN** // 60cm

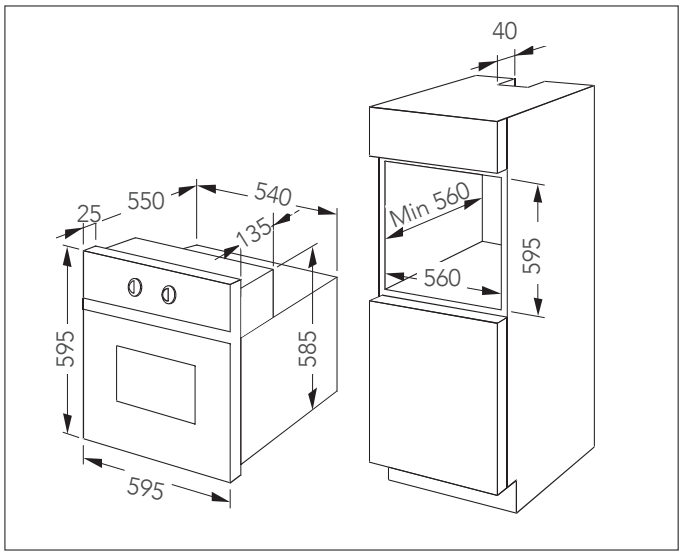

INSTALLATION Oven requires a dedicated 15 amp circuit from socket to main switchboard. Refer your qualified technician to our product manual.
CLEANING AND MAINTENANCE Easy clean enamel interior. Clean stainless steel using only recommended stainless steel cleaning products. No abrasives, corrosive detergents, bleaches or acids.

SCCN60 **CERAMIC COOKTOP** // 60cm

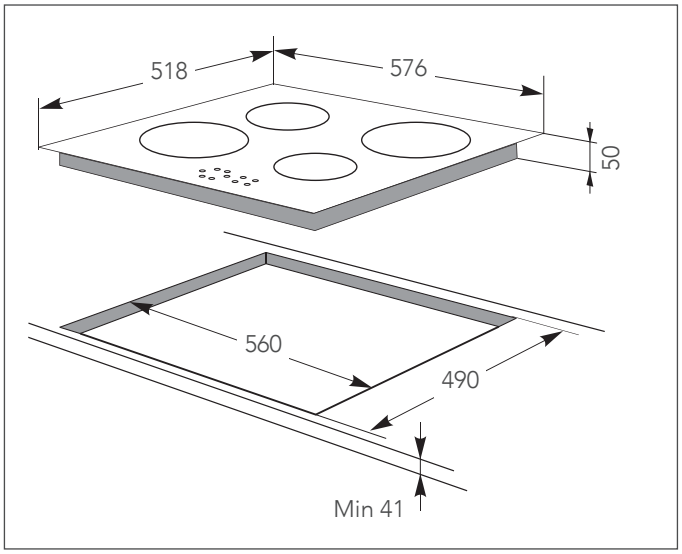

INSTALLATION Cooktop requires a hard wired connection from the main switchboard using a 240V supply with a dedicated circuit. Refer your qualified technician to our product manual.
CLEANING AND MAINTENANCE Easy clean glass top with recommended glass cleaning products. No abrasives, corrosive detergents, bleaches or acids.

SCGT60 **GAS COOKTOP** // 60cm

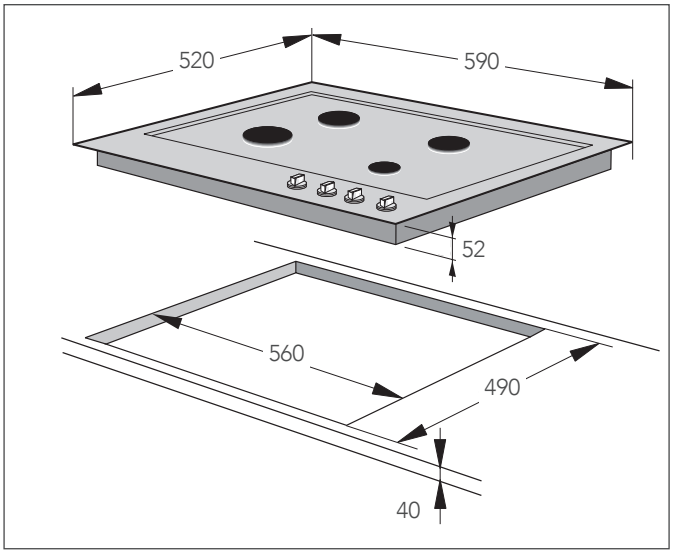

INSTALLATION Cooktop is supplied with a 10 amp lead and plug. Refer your qualified technician to our product manual. Natural Gas and LPG Jets supplied.
CLEANING AND MAINTENANCE Easy clean stainless steel top. No abrasives, corrosive detergents, bleaches or acids.

SC28LMO **COMBI MICROWAVE OVEN** // 60cm

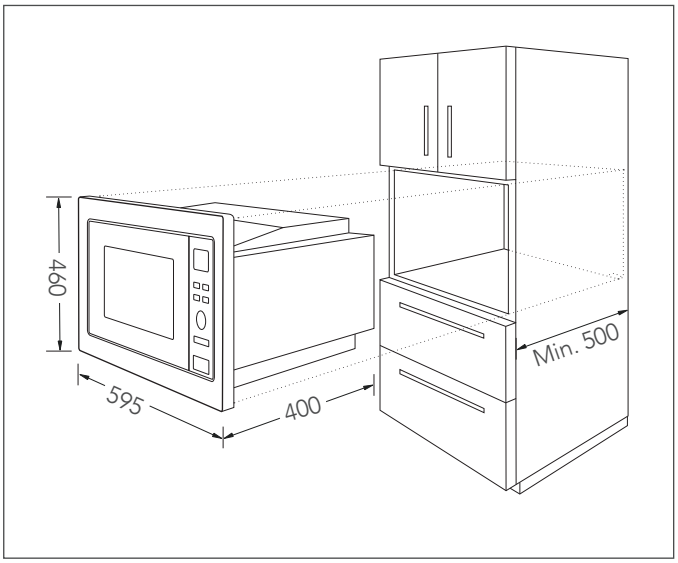

INSTALLATION by a qualified, professional technician is recommended.

CLEANING AND MAINTENANCE Easy clean stainless steel fascia using only recommended stainless steel cleaning products. No abrasives, corrosive detergents, bleaches or acids.

SCDW60 **FREE-STANDING DISHWASHER** // 60cm

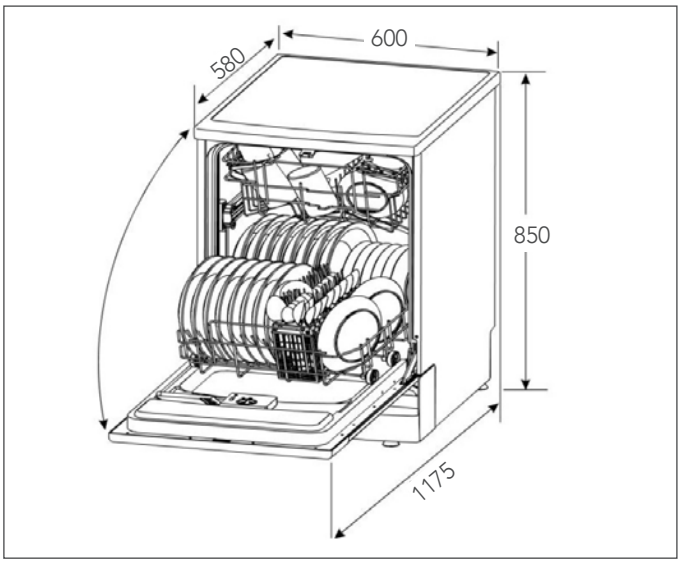

INSTALLATION by a qualified, professional technician is recommended.

CLEANING AND MAINTENANCE Easy clean stainless steel fascia using only recommended stainless steel cleaning products. No abrasives, corrosive detergents, bleaches or acids.

SC600UMS **UNDERMOUNT RANGEHOOD** / SILENT // 60cm

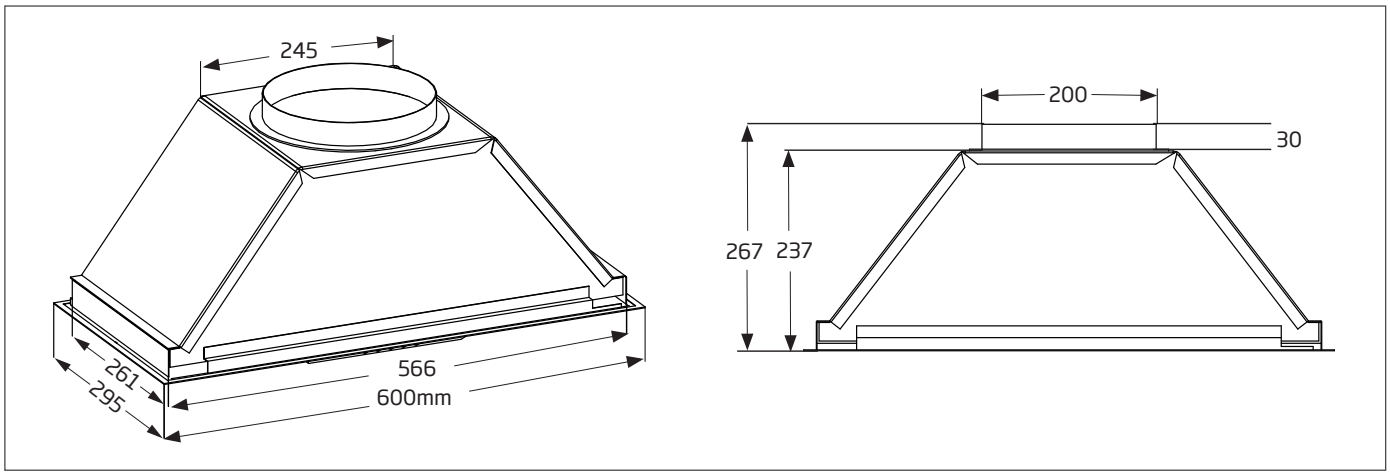

SC900UMS **UNDERMOUNT RANGEHOOD** / SILENT // 90cm

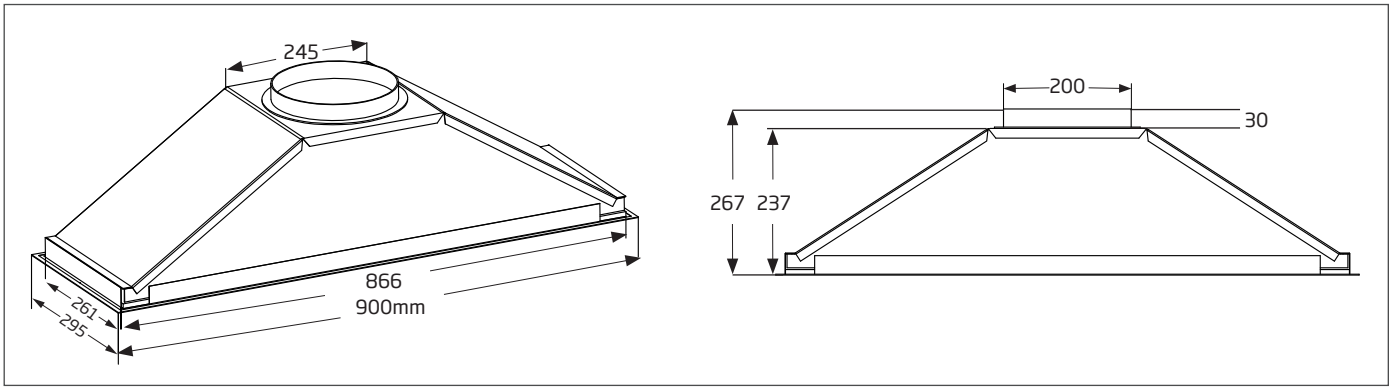

SCUM-6C **UNDERMOUNT RANGEHOOD** // 60cm

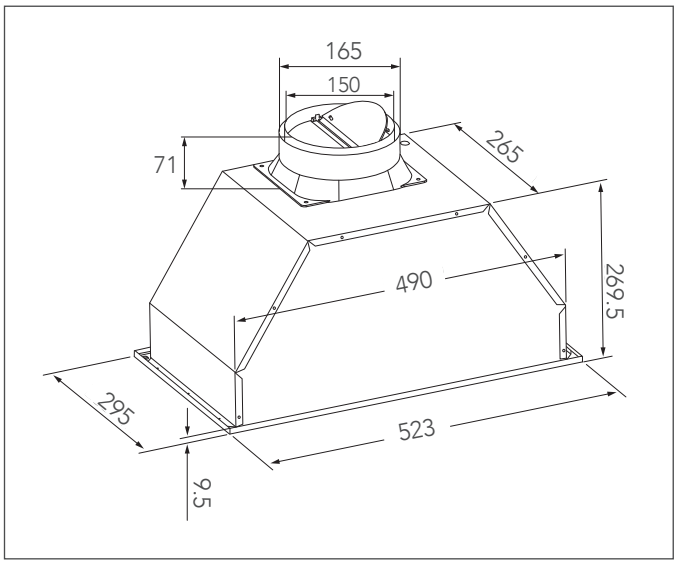

SCUM-9C **UNDERMOUNT RANGEHOOD** // 90cm

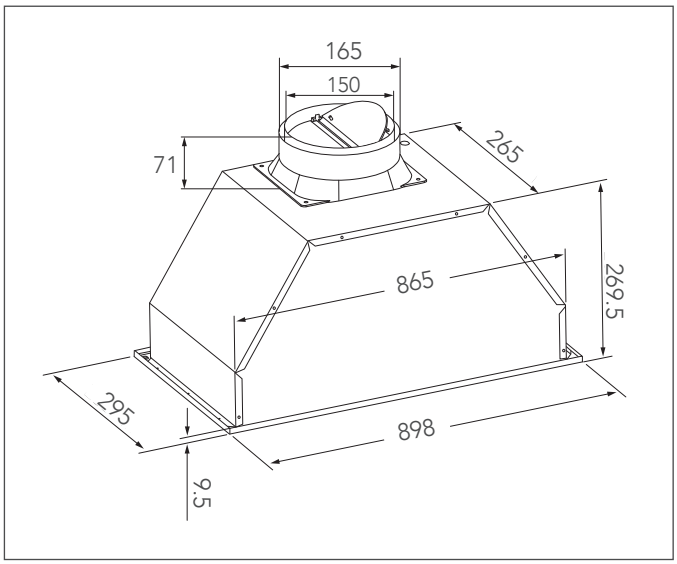

SCRH60 **SLIDE-OUT RANGEHOOD** // 60cm

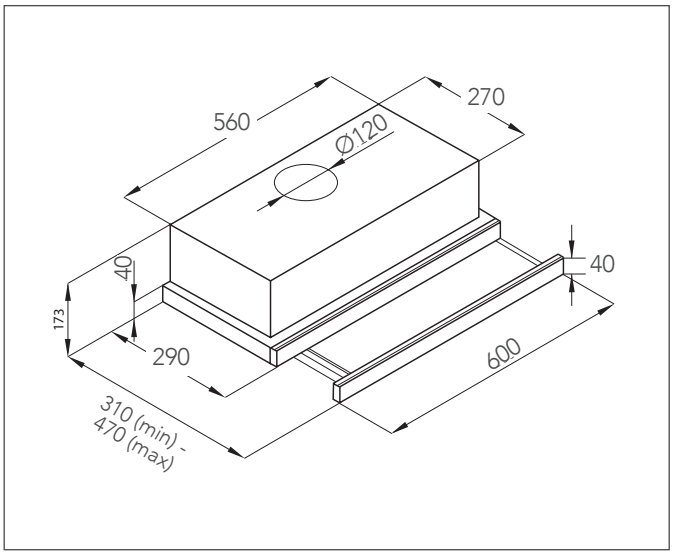

FOR ALL RANGEHOOD INSTALLATIONS
A qualified, professional technician is recommended.
10 amp plug supplied

CLEANING AND MAINTENANCE
Easy clean stainless steel using only recommended stainless steel cleaning products. No abrasives, corrosive detergents, bleaches or acids.

INSTALLATION NOTES

All measurements in millimetres.

All specifications and product sizes may be varied by the manufacturer without notice. Axis Group International are not responsible for any errors or omissions.

Pictures, specifications and dimensions are for illustration purposes only and cut-outs for appliances should only be physical product measurements. All dimensions and information are for indicative use only. Please refer to all technical specifications in the Installation Manual supplied with the appliance, prior to installation.

3 YR WARRANTY

Scandium® European Quality Kitchen Appliances are covered by a 3 Year Warranty, and are serviced by our experienced Australian Customer Service Team.

axisgroup

SCANDIUM
Makes life easier.

AUSTRALIA 8/3-4 Anzed Court, Mulgrave VIC 3170. **Phone** 1300 881 693
Email info@scandiumappliances.com.au **Web** www.scandiumappliances.com.au

NEW ZEALAND 5 Tolich Place, Henderson, Auckland 0610. **Phone** 0800 200 510
Email info.parex@emerson.com **Web** www.parex.co.nz