Parts:

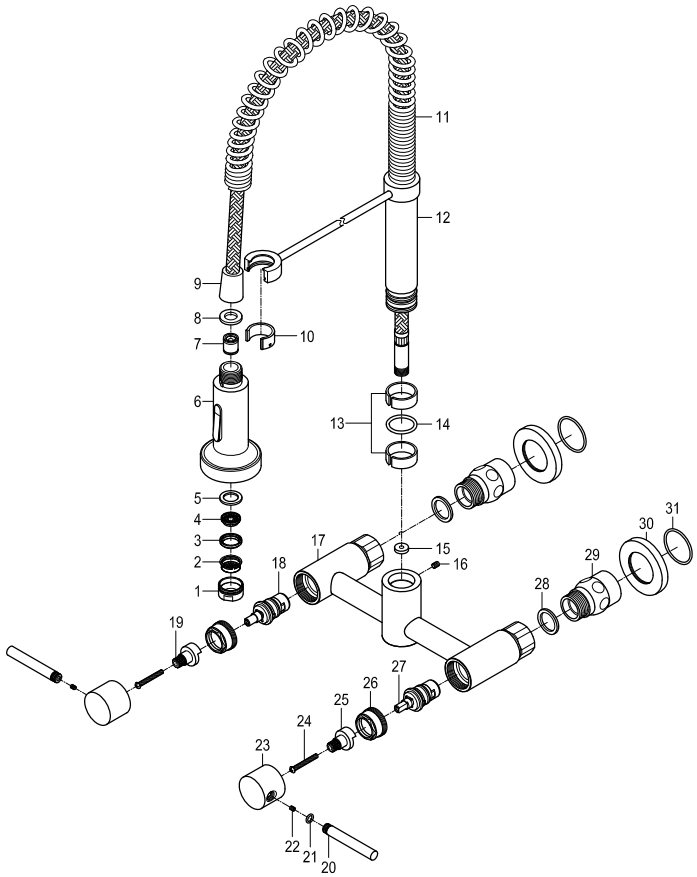

Replacement Parts:



Hot Cartridge: KSRPL8100HC

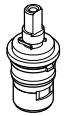

Cold Cartridge: KSRPL8100CC

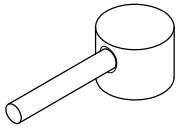

Handle: KSH8271DL

KINGSTON
KITCHEN & BATH

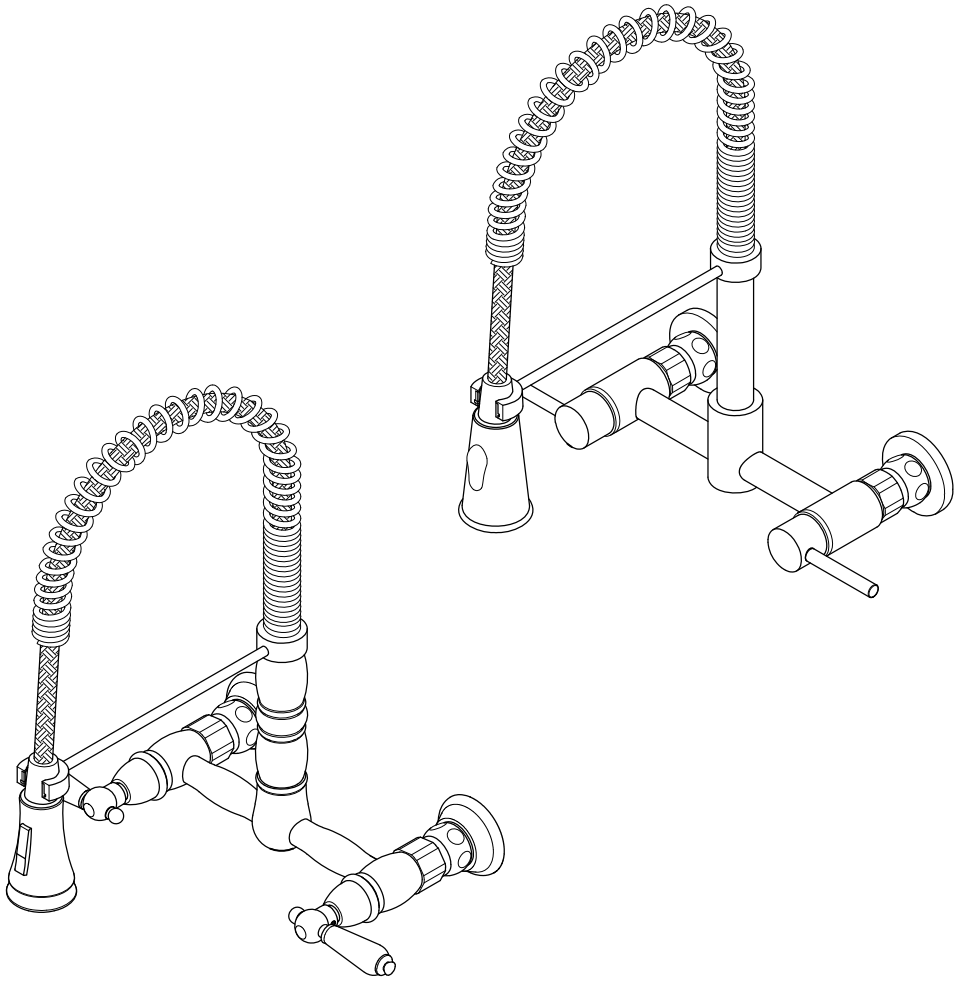

CARE AND MAINTENANCE OF YOUR FAUCET

Your Kingston Brass faucet has been finished to the most strict standards; however, due to the high content of minerals in the water, your finish may appear dull and tarnished after time. These are some do's and don'ts to maintain the luster on your faucet for many years to come.

DO
1. Use a silicon based caulking when installing.
2. Clean your faucet with only a mild soap and water solution.
3. Dry your faucet after using it.
4. Give it a coat of Carnauba Wax periodically.

DON'T
1. Use plumbers putty when installing the faucet.
2. Use any abrasive cleaning agents.

It may seem like a very simple and short list but it is that simple to maintain your faucet, looking shiny and new.

If your faucet is already looking somewhat dull and tarnished, before replacing it, try cleaning it with a 50/50 solution of vinegar and water, you may need to soak some rags and wrap around those stubborn areas, leave overnight and rinse completely in the morning, apply Carnauba wax once you have removed the mineral deposits.

www.kingstonbrass.com
TOLL-FREE CUSTOMER SERVICE: 1-877-2-KBRASS
TECHNICAL SUPPORT E-mail: service@kingstonbrass.com
12775 Reservoir Street, Chino, CA 91710

NOTICE

Failure to follow all directions may cause leaks which may result in water damage

⚠CAUTION

Failure to follow all installation directions may cause product to detach from the wall and cause serious injury

KINGSTON
KITCHEN & BATH

INSTALLATION INSTRUCTIONS
Twin Handles Wall Mount Kitchen Faucet

Need Tools:

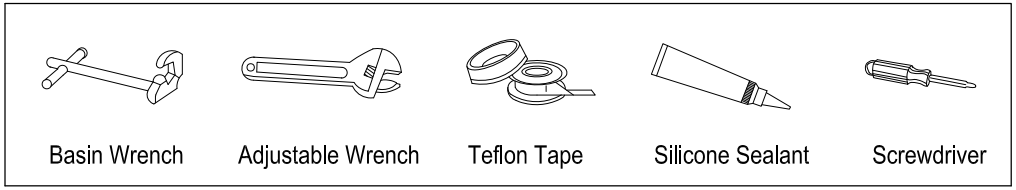

BEFORE BEGINNING INSTALLATION:

1. Flush plumbing lines to clear any debris.
2. Shut off both supply lines after flushing.

1

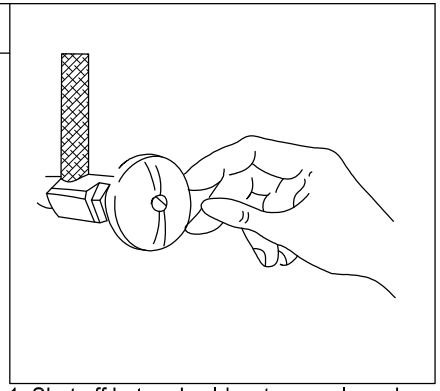

1. Shut off hot and cold water supply under sink. Plug sink drain with cloth to avoid losing small parts. Remove old faucet.

2

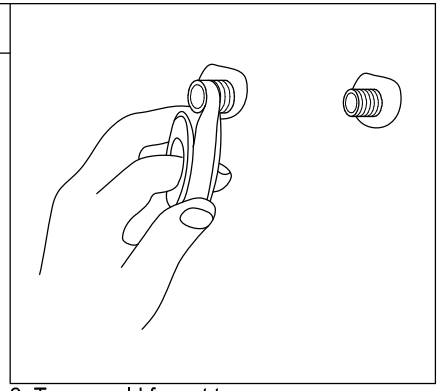

2. Turn on old faucet to remove any excess water in the supply lines. Apply Teflon tape onto both threads of supply elbows.

5

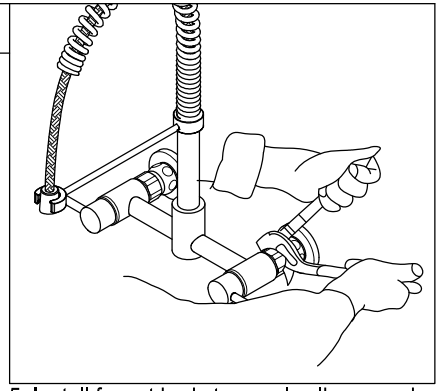

5. Install faucet body to supply elbows and tighten the elbow with an adjustable wrench.

6

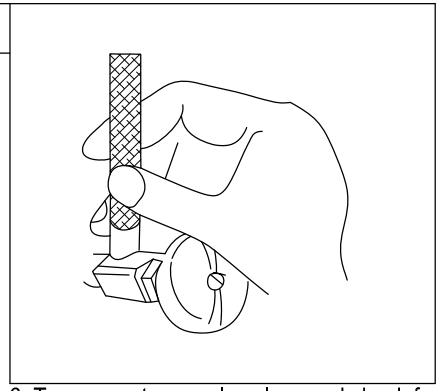

6. Turn on water supply valves and check for leaks, especially all supply line connections.

3

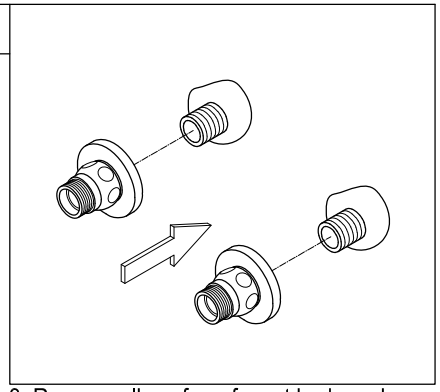

3. Remove elbow from faucet body and install to water outlet on wall.

4

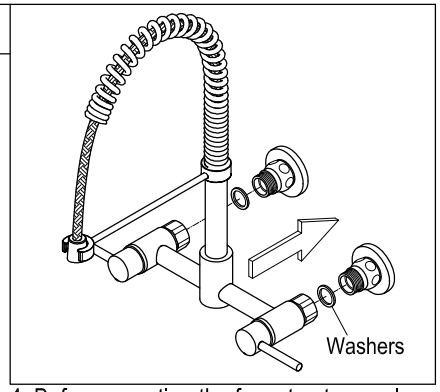

4. Before mounting the faucet onto supply elbows, apply small black washers onto both water inlets of faucet.

7

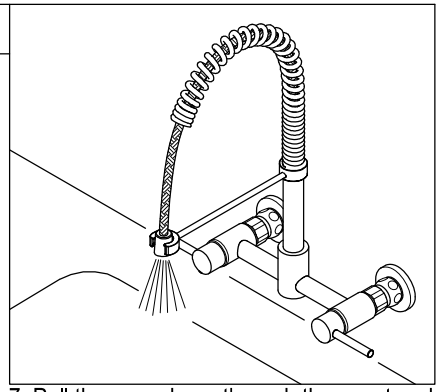

7. Pull the spray hose through the spout and secure the end into the drain, or have a secure party hold the spray hose, and turn on the faucet and flush for one minute.

8

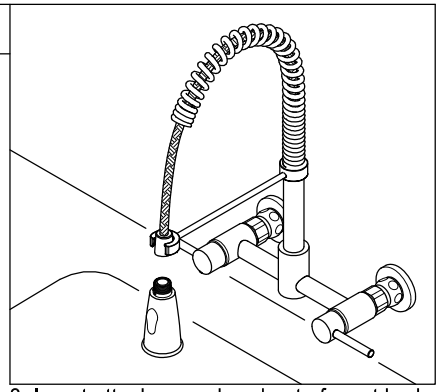

8. Insert attach spray head onto faucet body.

© 2023-06-T Kingston Brass