STANDARD BAKE OVEN DO54B STANDARD ROAST OVEN DO54R

Commercial & Marine

Installation and Operation Instructions

2M-W476 REV E (08-23)

DO54B *shown*

These appliances are intended to be used for commercial applications, for example; in kitchens for restaurants, canteens, hospitals, and in commercial enterprises such as bakeries, butcheries, etc., but not for continuous mass production of food.

THIS MANUAL MUST BE RETAINED FOR FUTURE REFERENCE. READ, UNDERSTAND AND FOLLOW THE INSTRUCTIONS AND WARNINGS CONTAINED IN THIS MANUAL.

FOR YOUR SAFETY
DO NOT STORE OR USE GASOLINE OR OTHER FLAMMABLE VAPORS AND LIQUIDS IN THE VICINITY OF THIS OR ANY OTHER APPLIANCE.

POST IN A PROMINENT LOCATION
INSTRUCTIONS TO BE FOLLOWED IN THE EVENT USER SMELLS GAS. THIS INFORMATION SHALL BE OBTAINED BY CONSULTING YOUR LOCAL GAS SUPPLIER.
AS A MINIMUM, TURN OFF THE GAS
AND CALL YOUR GAS COMPANY AND YOUR AUTHORIZED SERVICE AGENT. EVACUATE ALL PERSONNEL FROM THE AREA.

WARNING: IMPROPER INSTALLATION, ADJUSTMENT, ALTERATION, SERVICE OR MAINTENANCE CAN CAUSE PROPERTY DAMAGE, INJURY OR DEATH. READ THE INSTALLATION, OPERATING AND MAINTENANCE INSTRUCTIONS THOROUGHLY
BEFORE INSTALLING OR SERVICING THIS EQUIPMENT.

Model #:	Purchased From:
Serial #:	Location:
Date Purchased:	Date Installed:
Purchase Order #:	For Service, Call:

TABLE OF CONTENTS

CHAPTER **PAGE**

TABLE OF CONTENTS.....3
READ FIRST.....4
EQUIPMENT DESCRIPTION.....6
UNPACKING.....7
INSTALLATION.....8
OPERATION.....11
MAINTENANCE & CLEANING PROCEDURES.....13
TROUBLESHOOTING.....14
WIRING DIAGRAMS.....16-17
EXPLODED VIEWS.....18-19
PARTS LISTS.....20-22

IMPORTANT READ FIRST IMPORTANT

CAUTION: EACH UNIT IS EXTREMELY HEAVY. FOR SAFE HANDLING, INSTALLER SHOULD OBTAIN HELP AS NEEDED, OR EMPLOY APPROPRIATE MATERIAL HANDLING EQUIPMENT (SUCH AS A FORKLIFT, DOLLY, OR PALLET JACK) TO REMOVE THE UNIT FROM THE SKID AND MOVE IT TO THE PLACE OF INSTALLATION.

CAUTION: ANY STAND, COUNTER OR OTHER DEVICE ON WHICH THE MELTER WILL BE LOCATED MUST BE DESIGNED TO SUPPORT THE WEIGHT OF THE UNIT.

CAUTION: SHIPPING STRAPS ARE UNDER TENSION AND CAN SNAP BACK WHEN CUT.

DANGER: THIS APPLIANCE MUST BE GROUNDED AT THE TERMINAL PROVIDED. FAILURE TO GROUND THE APPLIANCE COULD RESULT IN ELECTROCUTION AND DEATH.

DANGER

HIGH VOLTAGE

WARNING: INSTALLATION OF THE UNIT MUST BE DONE BY PERSONNEL QUALIFIED TO WORK WITH ELECTRICITY AND PLUMBING. IMPROPER INSTALLATION CAN CAUSE INJURY TO PERSONNEL AND/OR DAMAGE TO EQUIPMENT. UNIT MUST BE INSTALLED IN ACCORDANCE WITH ALL APPLICABLE CODES.

NOTICE: The data plate is located behind the circuit breaker door on oven. The oven voltage, wattage, serial number, wire size, and clearance specifications are on the data plate. This information should be carefully read and understood before proceeding with the installation.

NOTICE: The installation of any components such as a vent hood, grease extractors, fire extinguisher systems, must conform to their applicable National, State and locally recognized installation standards.

NOTICE: During the first few hours of operation you may notice a small amount of smoke coming off the melter, and a faint odor from the smoke. This is normal for a new melter and will disappear after the first few hours of use.

CAUTION: ALWAYS KEEP THE AREA NEAR THE APPLIANCE FREE FROM COMBUSTIBLE MATERIALS.

CAUTION: KEEP FLOOR IN FRONT OF EQUIPMENT CLEAN AND DRY. IF SPILLS OCCUR, CLEAN IMMEDIATELY, TO AVOID THE DANGER OF SLIPS OR FALLS.

IMPORTANT READ FIRST IMPORTANT

WARNING:	KEEP WATER AND SOLUTIONS OUT OF CONTROLS. NEVER SPRAY OR HOSE CONTROL CONSOLE, ELECTRICAL CONNECTIONS.
CAUTION:	MOST CLEANERS ARE HARMFUL TO THE SKIN, EYES, MUCOUS MEMBRANES AND CLOTHING. PRECAUTIONS SHOULD BE TAKEN TO WEAR RUBBER GLOVES, GOGGLES OR FACE SHIELD AND PROTECTIVE CLOTHING. CAREFULLY READ THE WARNING AND FOLLOW THE DIRECTIONS ON THE LABEL OF THE CLEANER TO BE USED.
NOTICE:	Never leave a chlorine sanitizer in contact with stainless steel surfaces longer than 10 minutes. Longer contact can cause corrosion.
NOTICE:	Service on this, or any other, LANG appliance must be performed by qualified personnel only. Consult your authorized service agent directory or call the factory at 800-264-7827, or www.langworld.com for the service agent nearest you.
WARNING:	BOTH HIGH AND LOW VOLTAGES ARE PRESENT INSIDE THIS APPLIANCE WHEN THE UNIT IS PLUGGED/WIRED INTO A LIVE RECEPTACLE. BEFORE REPLACING ANY PARTS, DISCONNECT THE UNIT FROM THE ELECTRIC POWER SUPPLY.
CAUTION:	USE OF ANY REPLACEMENT PARTS OTHER THAN THOSE SUPPLIED BY LANG OR THEIR AUTHORIZED DISTRIBUTORS CAN CAUSE BODILY INJURY TO THE OPERATOR AND DAMAGE TO THE EQUIPMENT AND WILL VOID ALL WARRANTIES.

HIGH VOLTAGE

Lang Model: DO54B & DO54R
Double Bake Oven Range

Exterior

Bake oven (Model: DO54B)

The oven dimensions are 20” (50.8cm) High, 36” (91.5cm) Deep, and 54” (137cm) Wide.
The Sides, Bottom, and Rear wall are constructed stainless steel.
The bake oven has an 8” opening.

Roast oven (Model: DO54R)

The oven dimensions are 20” (50.8cm) High, 36” (91.5cm) Deep, and 54” (137cm) Wide.
The Sides, Bottom, and Rear wall are constructed stainless steel.
The roast oven has an 8” opening.

Interior

Bake oven

The interior dimensions are 8” (20.3 cm) High, 30” (76.2 cm) Deep, and 38” (96.5 cm).
The interior is designed for baking on the rack or directly on the bottom surface of the oven.

Roast oven

The interior dimensions are 12” (30.5 cm) High, 30” (76.2 cm) Deep, and 38” (96.5 cm).
The interior is designed for baking on the rack or directly on the bottom surface of the oven.

Controls

The oven is provided with both an upper and a bottom-heating element.
The upper element is visible in the top of the oven the lower oven element is under the bottom deck of the oven.
Both of these oven elements can be regulated with independently controlled three heat switches. These switches provide to proper ratio of top and bottom heat.
The oven is also provided with an adjustable thermostat that controls the overall average temperature of the oven.

Receiving the Oven

Upon receipt, check for freight damage, both visible and concealed. Visible damage should be noted on the freight bill at the time of delivery and signed by the carrier's agent. Concealed loss or damage means loss or damage which does not become apparent until the merchandise has been unpacked. If concealed loss or damage is discovered upon unpacking, make a written request for inspection by the carrier's agent within 15 days of delivery. All packing material should be kept for inspection. Do not return damaged merchandise to Lang Manufacturing Company. File your claim with the carrier.

Location

Prior to un-crating, move the oven as near its intended location as practical. The crating will help protect the unit from the physical damage normally associated with moving it through hallways and doorways.

Un-crating

The oven will arrive completely assembled inside a wood frame covered by cardboard box and strapped to a skid. Remove the cardboard cover, cut the straps and remove the wood frame.

CAUTION OVEN WEIGHS 395 LBS (408 kilograms). FOR SAFE HANDLING, INSTALLER SHOULD OBTAIN HELP AS NEEDED, OR EMPLOY APPROPRIATE MATERIALS HANDLING EQUIPMENT (SUCH AS A FORKLIFT, DOLLY, OR PALLET JACK) TO REMOVE THE UNIT FROM THE SKID AND MOVE IT TO THE PLACE OF INSTALLATION.

CAUTION ANY STAND, COUNTER OR OTHER DEVICE ON WHICH OVEN WILL BE LOCATED MUST BE DESIGNED TO SUPPORT THE WEIGHT OF THE OVEN (395 LBS.).

CAUTION SHIPPING STRAPS ARE UNDER TENSION AND CAN SNAP BACK WHEN CUT.

Remove oven from skid and place in intended location.

INSTALLING THE LEGS

Legs are available for the single, double, and triple deck installations. Single deck installations require a 27-inch leg. Double deck installations require a 16-inch and triple deck installations require a 6-inch leg.
To install the 27-inch legs, place some cardboard on the floor and gently tip the oven onto its back. Fasten two legs to the oven front corners using the four 5/16 inch bolts provided in the leg kit. Lift the oven onto its front legs and block the back up using one of the 27-inch legs set upside down in the center rear of the oven body. Install the last 27-inch leg onto the oven body on the control side rear. Gently lift the oven rear, remove the leg set to support the oven center and install it on the last rear corner.

To install the 16-inch legs follow the same directions for the 27-inch legs before stacking the second deck onto the bottom deck.
To install the 6-inch legs follow the same directions for the 27-inch legs before stacking the second deck onto the bottom deck.

INSTALLATION

DANGER:	THIS APPLIANCE MUST BE GROUNDED AT THE TERMINAL PROVIDED. FAILURE TO GROUND THE APPLIANCE COULD RESULT IN ELECTROCUTION AND DEATH.
WARNING:	INSTALLATION OF THE UNIT MUST BE DONE BY PERSONNEL QUALIFIED TO WORK WITH ELECTRICITY AND PLUMBING. IMPROPER INSTALLATION CAN CAUSE INJURY TO PERSONNEL AND/OR DAMAGE TO EQUIPMENT. UNIT MUST BE INSTALLED IN ACCORDANCE WITH ALL APPLICABLE CODES.

HIGH VOLTAGE

NOTICE:	**The installation of any components such as a vent hood, grease extractors, fire extinguisher systems, must conform to their applicable National, State and locally recognized installation standards.**
NOTICE:	**The data plate is located behind the circuit breaker door on oven. The oven voltage, wattage, serial number, wire size, and clearance specifications are on the data plate. This information should be carefully read and understood before proceeding with the installation.**

ELECTRICAL CONNECTION

Single Deck

Install the legs to the oven.
Electrical service connections can be made through an 11/4 knockout in the bottom of the oven.
Remove the cover attached to the oven circuit breakers for access.
Power connections can be made at the bottom of the circuit breakers.

Multiple Decks

Perform installation of single deck.
Remove the plug button from the top panel of the lower deck, and install the insulating bushing in the same hole.
Remove the vent cover stack from the lower deck by removing the screws that secure the cover.
Place the upper deck on top of the lower deck. Screw heads and vent stack of the lower deck will line up with the recesses in the bottom of the second deck.
Wire is supplied for making the electrical connections between the circuit breakers of the upper deck and the incoming supply wires of the bottom deck. Connect 44-inch wires to the bottom of the circuit breakers on the upper deck and identify these as wires 3 and 4.
Route wires 3 and 4 to the bottom deck. Connect these wires to the supply side of the bottom deck circuit breakers. Refer to PHASING for correct phasing.
To install additional deck repeat same steps above using appropriate wire lengths and identifying them as wires 5 and 6.

WARNING: MAKE SURE THE MAIN POWER SUPPLY TO THE RANGE IS TURNED OFF AT THE SOURCE PRIOR TO CONNECTING POWER TO THE RANGE.

DANGER

HIGH VOLTAGE

CAUTION: BE SURE THE POWER SUPPLY VOLTAGE MATCHES THE VOLTAGE SPECIFIED ON THE NAMEPLATE LOCATED ON THE FRONT OF THE RANGE.

"Number of Decks"	"Total K.W. Conn"	Three Phase									Single Phase	
		208 Volt			240 Volt			480 Volt			208 V	240 V
		L1	L2	L3	L1	L2	L3	L1	L2	L3	L1	L2
Single	6.0	28.8	28.8	0	25.0	25.0	0	12.5	12.5	0	28.8	25.0
Double	12.0	50.0	28.8	28.8	43.3	25.0	25.0	21.7	12.5	12.5	57.7	50.0
Triple	18.0	50.0	50.0	50.0	43.3	43.3	43.3	21.7	21.7	21.7	86.5	75.0

PHASING

POWER SUPPLY	TERMINAL BLOCK	SINGLE DECK	DOUBLE DECK	TRIPLE DECK
SINGLE PHASE	L1	1	3	5
	L2	2	4	6
THREE PHASE	L1	1	4	
	L2	2		5
	L3		3	6

INITIAL START UP

Prior to putting any oven into full time operation at normal cooking temperatures, it must be thoroughly “seasoned” or dried out. Moisture absorption in the closed spaces, in the insulation and even inside the heating elements can cause future trouble if not properly treated.
Before the initial use of the oven, they must be thoroughly allowed to dry out. This is done by setting the top and bottom oven switches to the “low” position, and setting the thermostat to 350 degrees. Allow the range ovens to saturate until all vapor and condensation has been eliminated. For best operating results allow the ovens to thoroughly dry out. Allow 8 to 12 hours for this process.
If the unit is out of use for three or more days, a one-hour preheat schedule should be used, especially when exposed to high humidity and/or cool temperatures

NOTICE: **During the first few hours of operation you may notice a small amount of smoke coming off the melter, and a faint odor from the smoke. This is normal for a new melter and will disappear after the first few hours of use.**

Ovens

CAUTION: **ALWAYS KEEP THE AREA NEAR THE APPLIANCE FREE FROM COMBUSTIBLE MATERIALS.**

CAUTION: **KEEP FLOOR IN FRONT OF EQUIPMENT CLEAN AND DRY. IF SPILLS OCCUR, CLEAN IMMEDIATELY, TO AVOID THE DANGER OF SLIPS OR FALLS.**

The ovens must be thoroughly, preheated before satisfactory baking can be done. The ovens will not bake uniformly if not sufficiently preheated. To compensate for temperature drop when loading the ovens, set the thermostat up 50 degrees over the desired temperature. Reset thermostat after the ovens is loaded.

The ovens may, of course, be preheated with the 3 heat switches set at a lower position than “High”, but the time required will be proportionally longer. After preheating, set the two 3 heat switches for proper ratio of “top” and “bottom” heat to suit the product to be baked or roasted.

The “Roasting and Baking” oven is equipped with a removable rack. For baking pies, bread, or for roasting operations, the rack may be placed directly on the metal deck and the pans placed on the rack. For baking cakes or pastries the rack should be located in the lower position provided by the rack supports at the sides of the range and the pans placed on the rack in this lower position.

The following temperature, time, switch setting and rack positions are suggested as a guide in baking various classes of products:

General Class of Product	Average Range Temperature	Time (Min.)	With Metal Switch Settings		Rack Position
			Top	Bottom	
Pies	375-425	35-60	Low	Medium	"Rack on Deck"
Rolls	375-400	15-30	Low	High	Rack Support
Cake	350-400	20-45	Low	High	Rack Support
Pastries	325-375	8-20	Low	High	Rack Support
Bread	425-450	25-45	Low	Medium	Rack on Deck
Roast Beef	300-325		Low	"High or Medium"	"Rack on Deck"

CLEANING

WARNING: **KEEP WATER AND SOLUTIONS OUT OF CONTROLS. NEVER SPRAY OR HOSE CONTROL CONSOLE, ELECTRICAL CONNECTIONS.**

CAUTION: **MOST CLEANERS ARE HARMFUL TO THE SKIN, EYES, MUCOUS MEMBRANES AND CLOTHING. PRECAUTIONS SHOULD BE TAKEN TO WEAR RUBBER GLOVES, GOGGLES OR FACE SHIELD AND PROTECTIVE CLOTHING. CAREFULLY READ THE WARNING AND FOLLOW THE DIRECTIONS ON THE LABEL OF THE CLEANER TO BE USED.**

The oven should be thoroughly cleaned at least once a week in addition to the normal daily cleaning to insure against the accumulation of foreign material. Keep inside of oven and metal deck clean, particularly around door opening, door edges and at bottom of door opening so that the door may close tightly.

NOTICE: **Any oven cleaner used should be marked: "SAFE ON ALUMINUM".**

Outside of oven and top should be kept clean.

Electric equipment is inherently clean and sanitary, but may become unsanitary if dirt is allowed to accumulate on it. Take advantage of the clean, sanitary features of electric equipment, give it the regular attention that it deserves the same as any other highly perfected machinery, to insure best results and continued high operating efficiency.

CALIBRATION

Calibration Check

- Place thermometer or thermocouple in the center of oven cavity.
- Set thermostat to 350° and place both 3-heat switches in the "HIGH" position.
- Allow the oven to Preheat for at least half an hour.
- Note cycle on temperatures and cycle off temperatures for 3 cycles. (Red indicator light indicates when oven is calling for heat)
- After 3 cycles average the temperature. (Add all six temperatures and divide by 6)

Calibration Adjustment

- A 1/16" flat blade screwdriver with a 2" shaft is required to make adjustments on the thermostat.
- Maintain the oven temperature at 350°.
- Without turning the thermostat, remove the knob.
- Locate the adjustment screw at the base of the shaft and insert the screwdriver.
- Grasp the shaft and turn the screwdriver. Counter clockwise to increase and clockwise to decrease (1/8 of a turn will move the temperature 5-7 ° in either direction).
- Reinstall the oven knob and recheck the oven temperature.

Symptoms

What follows is a chart of Symptoms, Possible Causes, and Remedy's to aid in diagnosing faults with the oven.
Refer to the Symptoms column to locate the type of failure then to the Possible Cause for the items to be checked and the Remedy to column for possible solutions.

SYMPTOM	POSSIBLE CAUSE
Oven will not heat	• No power to Range • Internal breaker tripped • Defective Thermostat • Defective 3-heat switch • Defective oven element
Product is burning	• Product is cooked too long • Failed Thermostat • Failed 3-heat switch
Product under done	• Product is not cooking long enough • Failed Thermostat • Failed 3-heat switch

TESTS

NOTICE: **Service on this, or any other, LANG appliance must be performed by qualified personnel only. Consult your authorized service agent directory or call the factory at 800-264-7827, or www.langworld.com for the service agent nearest you.**

WARNING: **BOTH HIGH AND LOW VOLTAGES ARE PRESENT INSIDE THIS APPLIANCE WHEN THE UNIT IS PLUGGED/WIRED INTO A LIVE RECEPTACLE. BEFORE REPLACING ANY PARTS, DISCONNECT THE UNIT FROM THE ELECTRIC POWER SUPPLY.**

HIGH VOLTAGE

If an item on the list is followed by an asterisk (*), the work should be done by a factory authorized service representative.

POSSIBLE CAUSE	TEST
Product is cooked too long	• No test available, operational condition
Failed Thermostat	• Verify calibration
Failed element	• Remove wires and check for continuity across the element*
Failed 3-heat switch	• Call factory or consult Service Manual for correct checks on each switch*
Failed internal breaker	• Reset breaker

CAUTION: **USE OF ANY REPLACEMENT PARTS OTHER THAN THOSE SUPPLIED BY LANG OR THEIR AUTHORIZED DISTRIBUTORS CAN CAUSE BODILY INJURY TO THE OPERATOR AND DAMAGE TO THE EQUIPMENT AND WILL VOID ALL WARRANTIES.**

EXPLODED VIEW

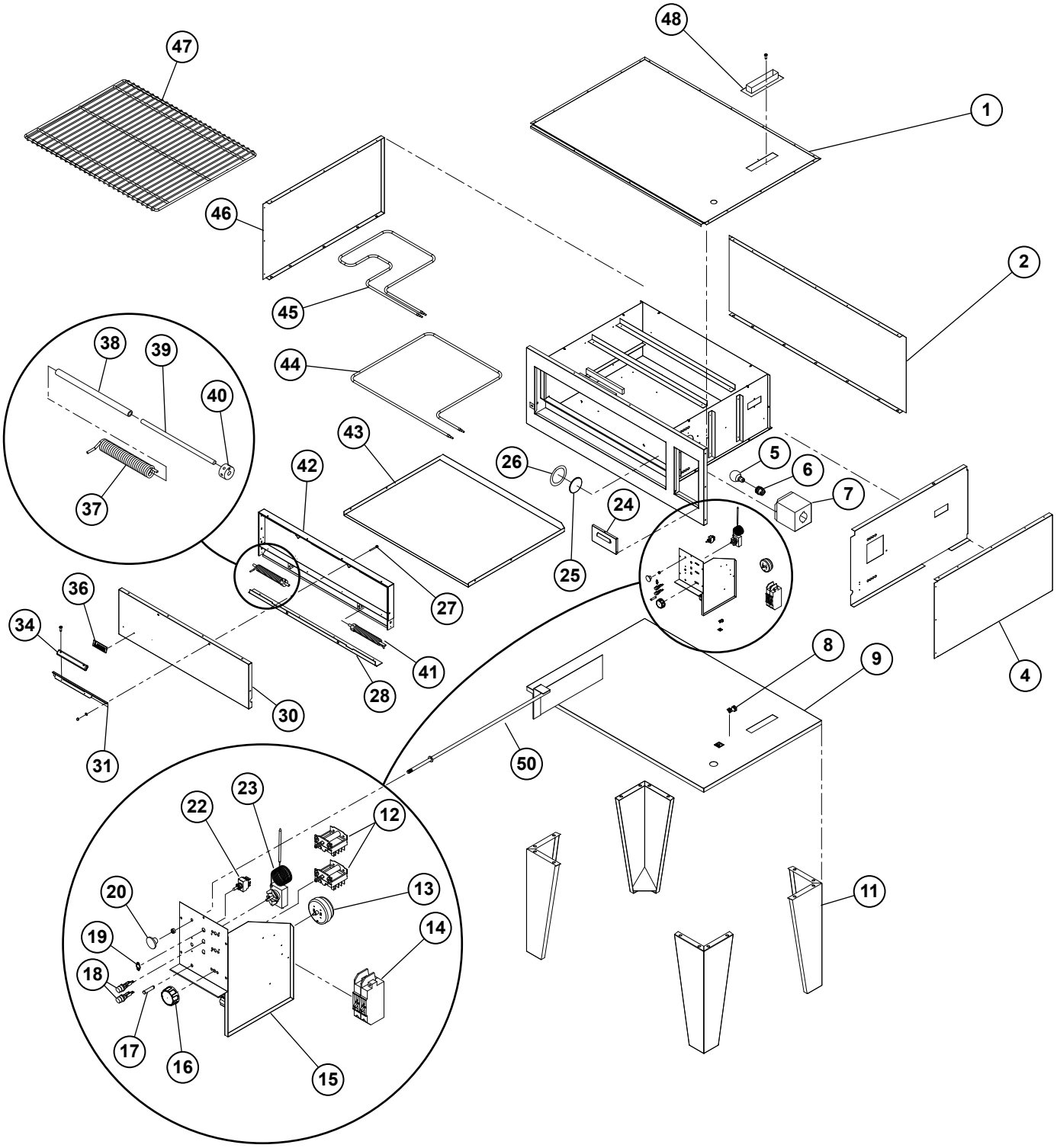

Model
DO54R & DO54B, 54” Deck Oven
3827, 54” Deck Oven

SK2298 REV E (07-23)

PARTS LIST

REV D (07-23)

Item No.	Part No	Qty	Description	Application
1	N9-3827-225-1	1	S/S OVEN TOP	ALL MODELS
2	N9-3827-101-10	1	BODY WRAP BACK R DECK S/S	ALL ROAST MODELS
	N9-3827-101-11		BODY WRAP BACK B DECK S/S	ALL BAKE MODELS
4	N9-3827-101-13	1	BODY SIDE R DECK S/S - RH	ALL ROAST MODELS
	N9-3827-101-15		BODY SIDE B DECK S/S - RH	ALL BAKE MODELS
5	2S-31603-04	1	LAMPS INC 250V 50W	ALL MODELS
6	2E-31602-04	1	LAMP SKT SNAP-IN WHT PORCELAIN	ALL MODELS
7	N9-3827-231-1	1	LIGHT BOX WELDMENT	ALL MODELS
8	2C-20103-02	1	SCRW SM PLT 10 X .5 PHLSL TP A	ALL MODELS
	2C-20202-10		WSHR PLT #10 LOCK EXT	ALL MODELS
8	2E-31200-02	1	LUG GROUNDING UL APPROVED	ALL MODELS
9	N9-3827-103	1	BOTTOM	ALL MODELS
11	9Y-LK-27	1	LEG KIT (SET OF 4)	OPTIONAL ACCESSORY
	9Y-LK-27M		MARINE LEG KIT (SET OF 4)	
12	2E-30304-W35	2	SWITCH, EGO REPLACED BY PS-60101-W3	ALL MODELS
13	2J-30801-01	1	TIMER MECHANICAL LONG	ALL MODELS
14	2E-31800-01	2	CB 250V50A 1 POLE CRLNGSW	DO54B 208V AND 240V; DO54R 208V, 240V, AND 240VM
	2E-31800-04	1	CIRCUIT BRK 480V 50A 3 PL	DO54B 2/3VM, 440VM, 480V AND 480VM ; DO54R 380/440/480VM
15	N9-3827-240	1	CONTROL PANEL SPOT	ALL MODELS
16	Q9-70701-09-2	1	KNOB ASSY MAN TIMER, RED	
	Y9-70701-10	2	KNOB ASSY 3-HEAT 208-240V, BLACK	
	Y9-70701-10-2		KNOB ASSY 3HT 208/240, RED	
	Y9-70701-15	1	KNOB ASSY 550°F, BLACK	
	Y9-70701-15-2		KNOB ASSY 550°F, RED	
17	Y9-31601-01-1	1	PILOT LT 250V W/TIN CLIP	DO54 208V, 2/3VM, AND 240V; DO54R 208V, 240V, AND 240VM
	Y9-31601-02-1		PILOT LT 480V W/TIN CLIP	DO54B 480V/480VM; DO54R 380/440/480VM
18	2E-30901-02	2	FUS HLDR FOR 15AMP FUSE	ALL MODELS
	2E-30900-01		FUSE 15 AMP	
19	2E-30303-05	1	SWT PLATE ON/OFF	ALL MODELS
20	2R-70701-25	1	KNOB DAMPER BLACK PLAIN	ALL MODELS
22	2E-30303-06	1	SWT TOG ON-ON DPDT BLK	ALL MODELS
23	2T-30402-07	1	STAT ADJ 550o 48 C/T	ALL MODELS
24	N9-3827-116	1	SWITCH DOOR - R DECK	ALL ROAST MODELS
	N9-3827-116-1		SWITCH DOOR - B DECK	ALL BAKE MODELS
25	2S-31604-01	1	OVEN LAMP LENS (WATCH GLASS)	ALL MODELS
26	2S-31604-02	1	OVEN LAMP LENS GASKET	ALL MODELS
27	2C-20101-10	2	SCRW THD MS 1/4-20X2 1/4	ALL MODELS
28	N9-3827-201	2	DOOR SPREADER BAR	ALL MODELS
30	N9-3827-213-3		DOOR OUTSIDE 'B' DECK	ALL BAKE MODELS
	N9-3827-213-2		DOOR OUTSIDE "R" DECK	ROAST, SOLID DOOR
31	P9-50312-79	1	RANGE HANDLE	ALL MODELS EXCEPT MARINE
34	2R-50800-91	1	DOOR HANDLE	ALL MODELS EXCEPT MARINE
	Y9-50300-38-1		HANDLE MARINE - ASSY SOLD AS 50300-38	ALL MARINE MODELS
36	K9-60301-43-1	1	SATIN CHRM-LANG DIE CAST REPLACES 2M-60301-43	ALL MODELS
37	2P-51001-01	1	SPRING OVN LH DOOR	ALL MODELS
38	N9-LA36-146	2	DOOR PIPE LA36	ALL MODELS
39	N9-LA36-145	2	DOOR RODS LA36	ALL MODELS
40	2A-50800-07	2	TENSION DISC STD OVEN	ALL MODELS
41	2A-50800-02	1	SPRING OVN RH DOOR	ALL MODELS
42	N9-3827-204-4	1	DOOR INSIDE PANEL - R	ALL ROAST MODELS
	N9-3827-204-3		DOOR INSIDE PANEL - B	ALL BAKE MODELS

IMPORTANT: WHEN ORDERING, SPECIFY VOLTAGE OR TYPE GAS DESIRED
INCLUDE MODEL AND SERIAL NUMBER

PAGE 1
OF 2

Some items are included for illustrative purposes only and in certain instances may not be available.

PARTS LIST cont.

REV D (07-23)

Item No.	Part No	Qty	Description	Application
43	N9-3827-222	1	METAL DECK	ALL MODELS
44	2N-11070-09	2	ELMNT 3827OVEN 208V I/S 1340W	ALL 208V MODELS
	2N-11070-15		ELE 3827OVN 240V IS 1340W	DO54B 2/3VM AND 240V; DO54R 240V AND 240VM
	2N-11070-19		ELMNT 3827OVEN 480V I/S 1340W	ALL 480V MODELS
45	2N-11070-10	2	ELMNT 3827OVEN 208V O/S 1635W	DO54B 208V; DO54R 208V & VM
	2N-11070-16		ELE 3827OVN 240V OS 1635W	DO54B 2/3VM AND 240V; DO54R 240V AND 240VM
	2N-11070-20		ELMNT 3827OVEN 480V O/S 1635W	ALL 480V MODELS
46	N9-3827-101-12	1	BODY SIDE R DECK S/S - LH	ALL ROAST MODELS
	N9-3827-101-14		BODY SIDE - B DECK S/S-	ALL BAKE MODELS
47	2B-50200-11	1	RACK 3827R DECK	ALL ROAST MODELS
	2B-50200-12		RACK 3827B DECK	ALL BAKE MODELS
48	N9-3827-721-1	1	VENT COVER WELD	ALL MODELS
50	N9-3827-W722	1	DAMPER & ROD WELDMENT	ALL MODELS
NI	N9-3827-711-3	1	DOOR ASSY R DECK W/OUT WINDOW	DO54R
NI	N9-3827-711-2	1	DOOR ASSY B DECK W/OUT WINDOW	DO54B
NI	N9-3827-800	1	DOOR ASSY R DECK W/OUT WINDOW MARINE	DO54R MARINE
NI	N9-3827-711-2-0	1	DOOR ASSY MRN B DECK W/ OUT WINDOW	DO54B MARINE
NI	2E-31400-04	1	TRANSFORMER 480/240VAC 100VA	ALL 480V MODELS

IMPORTANT: WHEN ORDERING, SPECIFY VOLTAGE OR TYPE GAS DESIRED
INCLUDE MODEL AND SERIAL NUMBER

PAGE 2
OF 2

Some items are included for illustrative purposes only and in certain instances may not be available.

REVISION BLOCK						
REV	ECN NO.	DESCRIPTION	DR:	MFG	ENG	DATE
G	5712	ADDED STAR MODEL COLUMNS UPDATED DWG TITLE	LRC			5-17-07

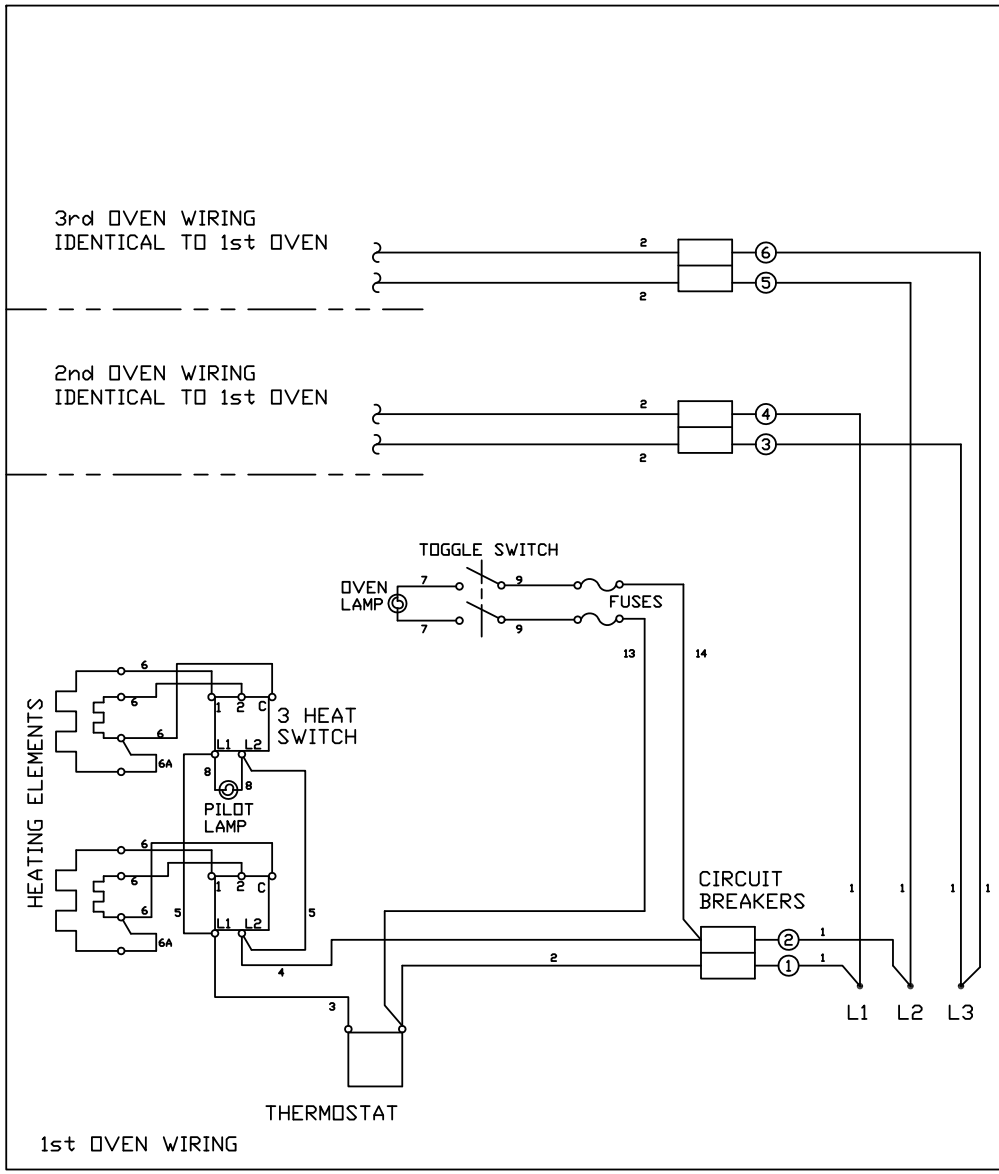

K.W. PER PHASE				
STAR MODEL	LANG MODEL	L1-L2	L2-L3	L3-L1
DO541	13827	6.0	0.0	0.0
DO542	23827	6.0	0.0	6.0
DO543	33827	6.0	6.0	6.0

AMPS PER LINE 208 VOLTS				
STAR MODEL	LANG MODEL	L1	L2	L3
DO541	13827	28.8	28.8	0.0
DO542	23827	50.0	28.8	28.8
DO543	33827	50.0	50.0	50.0

AMPS PER LINE 240 VOLTS				
STAR MODEL	LANG MODEL	L1	L2	L3
DO541	13827	25.0	25.0	0.0
DO542	23827	43.3	25.0	25.0
DO543	33827	43.3	43.3	43.3

AMPS 1 PHASE				
STAR MODEL	LANG MODEL	208 V	240 V	KW
DO541	13827	28.8	25.0	6.0
DO542	23827	57.7	50.0	12.0
DO543	33827	86.5	75.0	18.0

TOTAL K.W.		
STAR MODEL	LANG MODEL	
DO541	13827	6.0
DO542	23827	12.0
DO543	33827	18.0

USE ON SERIAL NO. D65300 AND ON

QTY	ITEM	PART NUMBER	DESCRIPTION / MATERIAL

LANG MANUFACTURING

DR: MM DATE:1-19-81
CK: BW DATE:1-19-81

TOLERANCES
FRACTIONS ± 1/64 ANGLES ± .5°
DECIMALS .X ± .05 .XX ± .03 .XXX ± .015
UNLESS OTHERWISE SPECIFIED DIMENSIONS ARE IN INCHES
SCALE: N/A

TITLE: WD DO54 (3827) 208-240 VAC

208-240V AC 1 OR 3 PHASE

NEXT HIGHER ASSY. | SHEET 1 OF 1 | DRAWING NUMBER 61110-01 | REV G

REVISION BLOCK						
REV	ECN NO.	DESCRIPTION	DR:	MFG	ENG	DATE
D	10834	ADDED CIRCUIT BREAKERS & WIRES TO MATCH PRODUCTION	DJS			7/5/11

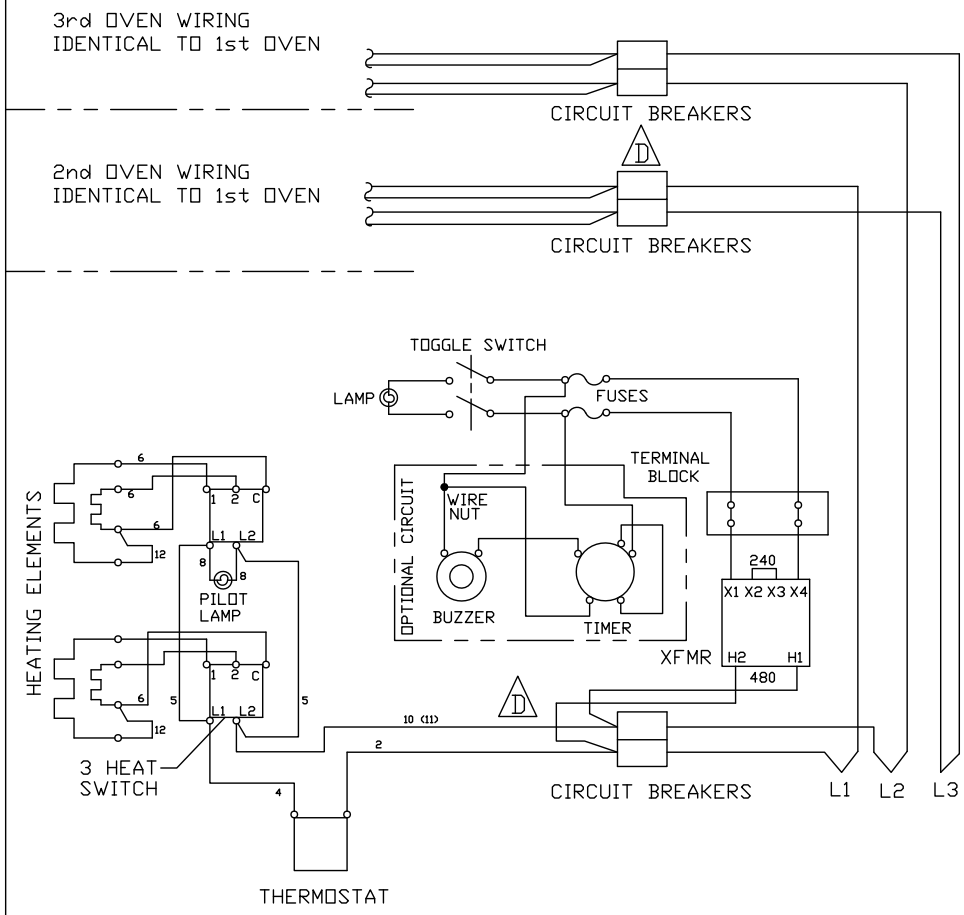

K.W. PER PHASE				
STAR MODEL	LANG MODEL	L1-L2	L2-L3	L3-L1
DO541	13827	6.0	0.0	0.0
DO542	23827	6.0	0.0	6.0
DO543	33827	6.0	6.0	6.0

AMPS PER LINE				
STAR MODEL	LANG MODEL	L1	L2	L3
DO541	13827	12.5	12.5	0.0
DO542	23827	21.6	12.5	12.5
DO543	33827	21.6	21.6	21.6

TOTAL K.W.		
STAR MODEL	LANG MODEL	
DO541	13827	6.0
DO542	23827	12.0
DO543	33827	18.0

USE ON SERIAL NO. D65300 AND ON

QTY	ITEM	PART NUMBER	DESCRIPTION / MATERIAL

LANG MANUFACTURING

DR: DJS DATE:7-25-96
CK: FD DATE:7-25-96

TITLE: WD DO54 (3827) 480VAC

TOLERANCES
FRACTIONS ± 1/64
ANGLES ± .5°
DECIMALS .X ± .05 .XX ± .03 .XXX ± .015
UNLESS OTHERWISE SPECIFIED DIMENSIONS ARE IN INCHES
SCALE: N/A

480 VOLT

NEXT HIGHER ASSY.
SHEET 1 OF 1
DRAWING NUMBER 61110-02
REV D

LIMITED EQUIPMENT WARRANTY

Lang Manufacturing warrants to the original purchaser of new Lang products to be free from defects in material or workmanship, under normal and proper use and maintenance service as specified by Lang and upon proper installation and start-up in accordance with the instructions supplied with each Lang unit. Lang's obligation under this warranty is limited to a period of one [1] year beginning from the date of original installation. The warranty period begins upon the earlier of the date of original installation or up to six [6] months after the original shipment, from the factory, of the covered product. Defects that occur as a result of normal use, within the time period and limitations defined in this warranty, will at Lang' discretion have the parts replaced or repaired by Lang or a Lang-authorized service agency.

THIS WARRANTY IS SUBJECT TO ALL LISTED CONDITIONS

Repairs performed under this warranty are to be performed by a Lang authorized service agency. Lang will not be responsible for charges incurred or service performed by non-authorized repair agencies. In all cases, the nearest Lang-authorized service agency must be used. Lang will be responsible for normal labor charges incurred in the repair or replacement of a warrantied product within 50 miles (80.5 km) of an authorized service agency. Time and expense charges for anything beyond that distance will be the responsibility of the owner. All labor will need to be performed during regular service hours. Any overtime premium will be charged to the owner. For all shipments outside the U.S.A. and Canada, please see the International Warranty for specific details. It is the responsibility of the owner to inspect and report any shipping damage claims, hidden or otherwise, promptly following delivery. No mileage or travel charges will be honored on any equipment that is deemed portable. In general, equipment with a cord and plug weighing less than 50 lb. (22.7 kg) is considered portable and should be taken or shipped to the closest authorized service agency, transportation prepaid.

CONTACT

Should you require any assistance regarding the operation or maintenance of any Lang Manufacturing; phone or email our service department. In all correspondence provide the model number and serial number of the unit needing service; include the voltage or gas type.

Normal Business Hours: 8:00 a.m. to 4:30 p.m. Central

Telephone: 800-264-7827 Tech Service Option 2

Email: TechService@partstown.com

www.LangWorld.com

PRODUCTS	PARTS	LABOR
Lang Strato Series™ convection ovens	2 years	2 years
Lang convection oven doors (excluding hardware)	lifetime	2 years
Lang griddles	2 years	2 years
Chrome griddle surfaces [against peeling]	5 years	
Cast iron grates, burners and burner shields	1 year	
Original Lang parts sold to repair Lang equipment	90 days	
Lang Ranges	2 years	2 years
Lang Marine	2 years	2 years

WARRANTY EXCLUSIONS

THE FOLLOWING WILL NOT BE COVERED UNDER WARRANTY.

Lang's sole obligation under this warranty is limited to either repair or replacement parts, subject to the additional limitations detailed below. This warranty neither assumes nor authorizes any person to assume obligations other than those expressly covered by this warranty.

- Any product which has not been used, maintained, or installed in accordance with the directions published in the appropriate installation sheet and/or owner's manual, including incorrect gas or electrical connection. Lang is not liable for any unit which has been mishandled, abused, misapplied, subjected to harsh chemicals, modified by unauthorized personnel, damaged by flood, fire, or other acts of nature [or God], or which have an altered or missing serial number.
- Installation, labor, and job checkouts, calibration of heat controls, air and gas burner/bypass/pilot adjustments, gas or electrical system checks, voltage and phase conversions, cleaning of equipment, or seasoning of griddle surface.
- Replacement of fuses or resetting of circuit breakers, safety controls, or reset buttons.
- Replacement of broken or damaged glass components, quartz heating elements, and light bulbs.
- Labor charges for all removable and consumable parts in gas charbroilers and hotplates, including but not limited to burners, grates, and radiants.
- Any labor charges incurred by delays, waiting time, or operating restrictions that hinder a service technician's ability to perform service.
- Replacement of parts that fail or are damaged due to normal wear or labor for replacement of parts that can be replaced during a daily cleaning routine, such as but not limited to silicone belts, PTFE non-stick sheets, control labels, knobs, bulbs, fuses, quartz heating elements, baskets, racks, and grease drawers.
- Any economic loss of business or profits.
- Non-OEM parts. Use of non-OEM parts without Lang's approval will void the warranty.
- Components that should be replaced when damaged or worn, but have been field-repaired instead [e.g. field-welded fry pots]
- Units exceeding one [1] year from original installation date.

ADDITIONAL WARRANTIES

- Specific/chain-specific equipment may have additional and/or extended warranties.

The foregoing warranty is in lieu of any, and all other warranties expressed or implied and constitutes the entire warranty.

STAR INTERNATIONAL HOLDINGS INC. COMPANY
Star - Holman - Lang - Wells - Toastmaster
265 Hobson St, Smithville, TN 37166 U.S.A.
(800) 264-7827
www.star-mfg.com