User Guide

Quality, Design and Innovation

home.liebherr.com/fridge-manuals

LIEBHERR

Contents

1 General safety instructions..... 3

2 The appliance at a glance..... 5
2.1 Delivered contents..... 5
2.2 Overview of appliances and equipment..... 6
2.3 SmartDevice..... 6
2.4 Range of appliance use..... 6
2.5 Conformity..... 7
2.6 Spare parts..... 7

3 Functionality of the Touch & Swipe display. 7
3.1 Navigation and symbol explanation..... 7
3.2 Menus..... 8
3.3 Sleep mode..... 8

4 Start-up..... 8
4.1 Switching on appliance (first use)..... 8
4.2 Starting the EasyTwist-Ice for the first time.. 9

5 Storage..... 9
5.1 Information regarding storage..... 9
5.2 Fridge compartment..... 9
5.3 EasyFresh 9
5.4 Freezer compartment..... 10
5.5 Storage times..... 10

6 Energy saving..... 11

7 Use..... 11
7.1 Controls and displays..... 11
7.1.1 Status display..... 11
7.1.2 Display symbols..... 11
7.2 Appliance functions..... 11
7.2.1 Notes on the appliance functions..... 11
Switching appliance off and on..... 12
Switching temperature zone off and on..... 12
WiFi..... 13
Temperature..... 14
Temperature unit..... 14
D-Value..... 15
SuperCool..... 15
PowerCool 15
VarioTemp..... 16
SuperFrost..... 17
Start defrost cycle..... 18
PartyMode 18
HolidayMode..... 19
SabbathMode..... 19
EnergySaver 20
CleaningMode..... 20
Display Brightness..... 21
Door alarm..... 21
Input lock..... 22
Language..... 22
Appliance information..... 22
Software..... 23
Reminder..... 23
Demo mode..... 23
Resetting to factory settings..... 24
7.3 Messages..... 24
7.3.1 Overview of warnings..... 24
7.3.2 Ending warnings..... 25
7.3.3 Overview of reminders..... 26
7.3.4 Ending reminders..... 26

8 Equipment..... 26
8.1 Door racks..... 26
8.2 Shelves..... 29
8.3 Split shelf..... 30
8.4 VarioSafe 30
8.5 Drawers..... 33
8.6 Lid for EasyFresh-safe..... 34
8.7 Glass shelves..... 35
8.8 EasyTwist-Ice..... 35
8.9 VarioSpace*..... 37
8.10 Butter dish..... 37
8.11 Egg rack..... 37
8.12 Bottle rack..... 37

9 Maintenance..... 38
9.1 FreshAir carbon filter..... 38
9.2 Disassembling / assembling pull-out systems..... 38
9.3 Lid for EasyFresh-safe..... 39
9.4 Defrosting the appliance..... 39
9.5 Cleaning the appliance..... 39

10 Customer support..... 42
10.1 Technical specifications..... 42

*** Depending on model and options**

10.2 Operating noises..... 43
10.3 Technical faults..... 43
10.4 Customer Service..... 44
10.5 Rating plate..... 45

11 Decommissioning..... 45

12 Disposal..... 45
12.1 Preparing the appliance for disposal..... 45
12.2 Disposing of the appliance in an environmentally friendly manner..... 45

Congratulations on the purchase of your new appliance. With this purchase, you have chosen all the advantages of the latest refrigeration technology, guaranteeing you a high-quality appliance with a long life span and high operating safety.

The equipment of your appliance gives you the highest level of day-to-day ease of operation.

Together we are making an active contribution to the conservation of our environment by purchasing this appliance which is manufactured in an environmentally friendly process with the use of recyclable materials.

We hope you enjoy your new appliance.

The manufacturer is constantly working to improve all types and models. Therefore, please be aware that we reserve the right to make changes to the shape, equipment and technology.

Symbol	Explanation
	Read instructions Please read the information in these instructions carefully to understand all of the benefits of your new appliance.
	Additional information online The digital manual with supplemental information can be found online by scanning the QR code on the front page of this manual or by entering the service number at **home.liebherr.com/fridge-manuals**.
	Check appliance Check all parts for transport damage. If you have any complaints, please contact your agent or customer service.
	Differences These instructions apply to a range of models, so there may be differences. Sections that apply to certain models only are indicated by an asterisk (*).
	Instructions and results Instructions are marked with a ▶. Results are marked with a ▷.

Symbol	Explanation
	Videos Videos about the appliances are available on the YouTube channel of Liebherr-Hausgeräte.

Open-source licenses:

The appliance includes software components that make use of open-source licenses. You can find information on the open-source licenses to be used here: **home.liebherr.com/open-source-licenses**

These operating instructions apply to:

C5250
SC5781
SC7751

1 General safety instructions

Please keep these operating instructions in a safe place so you can refer back to them at any time.

If you pass the appliance on, please hand these operating instructions to the new owner.

Read and follow these instructions. They contain safety information which is important for safe and problem-free installation and operation. Always read and follow the safety information.

Dangers for the user:

- This appliance is not intended for use by persons (including children) with reduced physical, sensory or mental capabilities, or lack of experience and knowledge, unless they have been given supervision or instruction concerning use of the appliance by a person responsible for their safety. Children should be supervised to ensure that they do not play with the appliance. Cleaning and user maintenance must not be performed by children unless they are supervised. Children between the ages of 3 and 8 may load and unload the appliance. Children under the age of 3 must be kept away from the appliance unless they are constantly supervised.
- **IMPORTANT:** The power plug must be easily accessible so that the appliance can be disconnected from the mains quickly in an emergency. It must not be behind the back of the appliance.
- The socket must be easily accessible so that the appliance can be disconnected quickly from the electricity in an emergency. It must not be located in the area behind the appliance.
- Always hold the appliance at the plug when disconnecting it from the household power. Do not pull on the cable.
- Disconnect the power plug or fuse if there is a malfunction.
- Do not damage the power cable. Do not operate the appliance with a faulty power cable. If the supply

*** Depending on model and options**

cord is damaged, it must be replaced by the manufacturer, its service agent or similarly qualified persons in order to avoid a hazard. For Plug and Play connections, the change may be carried out by the customer.
- Repairs and work on the appliance may only be carried out by Customer Service or other specifically trained qualified personnel.
- Always follow the instructions when assembling, connecting and disposing of the appliance.

Risk of fire:

- The refrigerant contained within the appliance (specifications on the identification plate) is environmentally friendly, but flammable. Leaking refrigerant can ignite.
  - **WARNING**: Do not damage the refrigerant circuit.
  - Do not handle ignition sources inside the appliance.
  - **WARNING**: Do not use electrical appliances inside the food storage compartments of the appliance, unless they are of the type recommended by the manufacturer (e.g. steam cleaning appliances, heating appliances, ice cream makers).
  - If refrigerant leaks: Remove naked flames or ignition sources located near the area of the leak. Ventilate the room well. Contact Customer Service.
- Do not operate the appliance near explosive gases.
- Do not store or use gasoline or other flammable gases and liquids near the appliance.
- Do not store explosive substances such as aerosol cans with a flammable propellant in this appliance. You can recognize such spray cans by the printed list of contents or by a flame symbol. Any leaking gases can be ignited by electrical components.
- Keep lit candles, lamps and other objects with naked flames away from the appliance so they do not cause a fire.
- Alcoholic beverages or other containers holding alcohol must always be tightly sealed for storage purposes. Any leaking alcohol can be ignited by electrical components.

Risk of falling or toppling over:

- **WARNING**: To avoid a hazard due to instability of the appliance, it must be fixed in accordance with the instructions.
- Do not stand on the base, drawers, doors etc. or use them as improper supports. This applies in particular to children.

Danger of poisoning:

- Do not consume spoiled food.

Danger of frostbite, feeling of numbness and pain:

- Avoid prolonged skin contact with cold surfaces or chilled/frozen food or take protective measures, e.g. wear gloves.

Risk of injury and damage:

- Hot steam may cause injuries. Do not use any electrical heating or steam cleaning equipment, naked flames or defrosting sprays for defrosting measures.
- **WARNING**: Do not use mechanical devices or other means to accelerate the defrosting process, other than those recommended by the manufacturer.
- Do not remove ice using sharp objects.
- **WARNING**: Keep clear of obstruction all ventilation openings in the appliance enclosure or in the structure for building-in.
- **WARNING**: Risk of child entrapment. Before you throw away your old refrigerator or freezer:
  - Take off the doors.
  - Leave the shelves in place so that children may not easily climb inside.

Risk of crushing:

- Do not hold onto the hinge when opening and closing the door. Fingers may become trapped.

California Proposition 65

- **WARNING**: This product can expose you to chemicals including Diisononyl Phthalate (DINP), which is known to the State of California to cause cancer, and Di-isodecyl Phthalate (DIDP), which is known to the State of California to cause birth defects or other reproductive harm. For more information, go to www.P65Warnings.ca.gov

FCC Warning

- Changes or modifications not expressly approved by the party responsible for compliance could void the user's authority to operate the equipment.

FCC information

- This appliance has been tested and found to comply with the limits for a Class B digital device, pursuant to part 15 of the FCC Rules. These limits are designed to provide reasonable protection against harmful interference from an installation in residential areas. This appliance generates, uses and can radiate radio-frequency energy and, if not installed and used in accordance with the instructions, may cause harmful interference to radio communications. However, there is no guarantee that interference will not occur in a particular installation. If this appliance does cause harmful interference to radio or television reception, which can be determined by switching the appliance on and off, the user should try to correct the interference by one or more of the following measures:
  - Reorient or relocate the receiving antenna.
  - Increase the distance between the appliance and receiver.
  - Connect the appliance to an outlet on a circuit different from that to which the receiver is connected.
  - Consult the dealer or an experienced radio/TV technician for help.

FCC Radio Frequency Exposure Statement

- This appliance is found to comply with FCC radio frequency (RF) exposure limits set for an uncon-

*** Depending on model and options**

trolled environment. This transmitter must not be set up or operated in conjunction with another antenna or another transmitter.
- This appliance should be installed and operated with a minimum space of 200 mm (7 7/8 in) between the antenna and your body. The user must follow the specific operating instructions to ensure compliance with RF exposure.

IC information

- This appliance has license-exempt transmitters/ receivers, which comply with the license-exempt Radio Standards Specification (RSS) of Innovation, Science and Economic Development Canada. Operation is subject to the following two conditions:
  - This appliance may not cause interference.
  - This device must accept any interference, including interference that may cause undesired operation of the device.

IC Radio Frequency Exposure Statement

- This appliance meets the IC RSS-102 limits for radiation exposure, which were defined for an uncontrolled environment. This appliance should be installed and operated so that there is a minimum space of 200 mm (7 7/8 in) between the antenna and your body.

Symbols on the device:

The symbol may be located on the compressor. It refers to the oil in the compressor and refers to the following danger: Can be fatal if swallowed or inhaled. This notice only applies for recycling. There is no danger during normal operation.

WARNING: Risk of fire / flammable materials. The symbol is located on the compressor and indicates the danger from flammable materials. Do not remove the label.

This label or a similar one may be located on the rear of the appliance. This label indicates that there are vacuum insulation panels (VIP) or perlite panels in the door and/or housing. This notice only applies for recycling. Do not remove the label.

Observe the warning messages and other detailed information in the other sections:

⚠	DANGER	Indicates an immediately hazardous situation, which if not avoided, will result in death or serious injury.
⚠	WARNING	Indicates a hazardous situation, which if not avoided, could result in death or serious injury.
⚠	CAUTION	Indicates a hazardous situation, which if not avoided, could result in minor or moderate injury.
	NOTICE	Indicates a hazardous situation, which if not avoided, could result in damage to property.
	Note	Indicates useful advice and tips.

2 The appliance at a glance

2.1 Delivered contents

Check all parts for transport damage. If you have any complaints, please contact the retailer or customer service. (see 10.4 Customer Service)

Delivery contains the following parts:

- Standalone appliance
- Equipment (depending on your model)
- Installation parts (depending on your model)
- User Guide
- Installation Guide
- Warranty documents

2.2 Overview of appliances and equipment

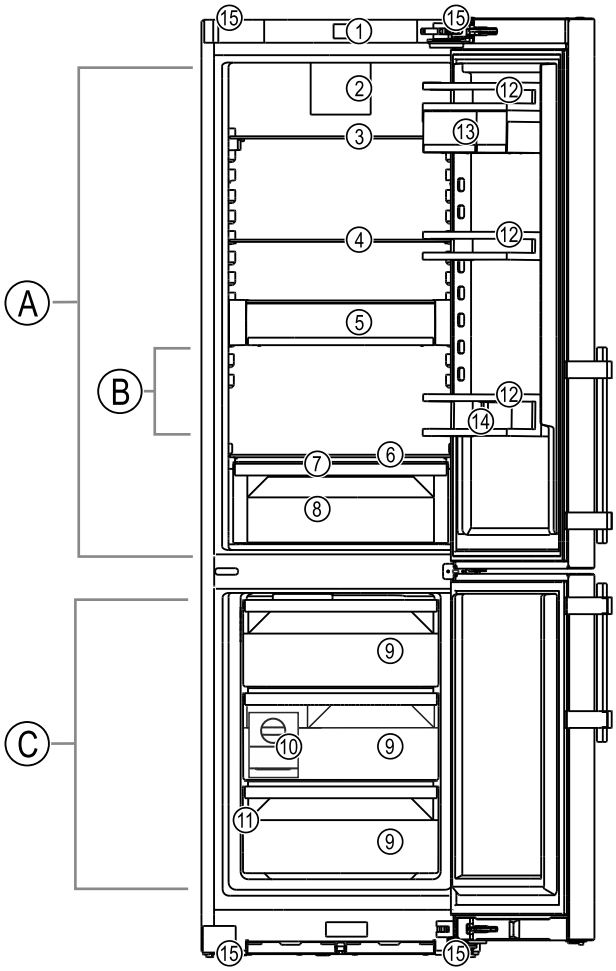

Fig. 1 Example illustration

Temperature range

(A) Fridge section
(B) Coldest zone
(C) Freezer section

Equipment

(1) Controls
(2) Fan with FreshAir activated charcoal filter
(3) Separable storage shelf
(4) Shelf
(5) VarioSafe
(6) Defrost water drain
(7) Lid for EasyFresh-safe
(8) EasyFresh-safe
(9) Drawer
(10) EasyTwist-Ice
(11) Type plate
(12) Door racks
(13) VarioBox
(14) Bottle holder
(15) Adjustable feet, front, transport casters, rear, top (rear) and bottom (front) carrying straps

2.3 SmartDevice

SmartDevice is the networking solution for your fridge-freezer.

If your appliance is SmartDevice-enabled or compatible, you can quickly and easily connect your appliance to your WiFi. With the SmartDevice app, you can operate your appliance from a mobile device. Additional functions and setting options are available in the SmartDevice app.

SmartDevice-enabled appliance:	Your appliance is capable of being a SmartDevice. To be able to connect your device to WiFi, you need to download the SmartDevice app.
More information about SmartDevice:	**smartdevice.liebherr.com**
Downloading the SmartDevice app:	

After you have installed and configured the SmartDevice app, you can connect your appliance to your WLAN using your SmartDevice app the WLAN device function (see WiFi) .

2.4 Range of appliance use

Normal use

This appliance is intended to be used in household and similar applications such as,

- staff kitchen areas in shops, offices and other working environments;
- farm houses and by clients in hotels, motels and other residential type environments;
- bed and breakfast type environments;
- catering and similar non-retail applications.

The appliance is not suitable as a built-in unit;

All other types of uses are not permitted.

Foreseeable misuse

The following uses are specifically prohibited:

- Storage and cooling of medication, blood plasma, laboratory preparations or similar substances and products in accordance with the CMDCAS and FDA 510(k)
- Use outdoors

*** Depending on model and options**

- Use in moist areas exposed to the rain
- Use in outdoor areas with very high humidity
- Use in areas at risk of explosion

Incorrect appliance use can cause damage to the stored products or cause them to spoil.

Climate ratings

The appliance is set to operate within specific ambient temperature limits according to its climate rating The climate rating for your appliance is printed on the rating plate

Note

▶ To guarantee trouble-free operation, comply with the indicated ambient temperatures.

Climate rating	for ambient temperatures from
SN	10 °C (50 °F) to 32 °C (90 °F)
N	16 °C (61 °F) to 32 °C (90 °F)
ST	16 °C (61 °F) to 38 °C (100 °F)
T	16 °C (61 °F) to 43 °C (109 °F)
SN-ST	10 °C (50 °F) to 38 °C (100 °F)
SN-T	10 °C (50 °F) to 43 °C (109 °F)

2.5 Conformity

The refrigerant circuit has been tested for leaks. The appliance complies with the applicable safety regulations and with the corresponding directives.

2.6 Spare parts

Spare parts for functional and storable parts of the equipment are available for 15 years.

3 Functionality of the Touch & Swipe display

You operate your appliance using the Touch & Swipe display. You select appliance functions in the Touch & Swipe display (hereafter referred to as display) by tapping them. If you do not perform any action on the display for 10 seconds, the display either jumps back to the higher-level menu or directly to the status display.

3.1 Navigation and symbol explanation

In the illustrations, different symbols are used to navigate the display. The following table describes these symbols.

Symbol	Description
	Briefly touch the display: Activates/deactivates function. Confirms selection. Opens submenu.
	Touch the display for a specified time (e.g. 3 seconds): Activates/deactivates function or value.
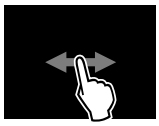	**Swipe left or right:** Navigate in the menu.
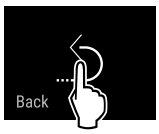	**Briefly touch the Back symbol:** Jumps back one menu level.
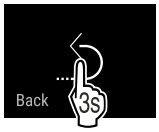	**Press and hold the Back symbol for 3 seconds:** Jumps back to the status display.
	Arrow with clock: It takes more than 10 seconds for the following message to appear in the display.
	Arrow with a time indication: It takes the specified amount of time until the following message appears in the display.
	“Open Settings menu” symbol: Navigates to the Settings menu and opens the settings menu. If necessary: Navigate to the desired function in the Settings menu. (see 3.2.1 Opening the Settings menu)
	“Open Advanced menu” symbol: Navigates to the Advanced menu and opens the advanced menu. If necessary: Navigate to the desired function in the Advanced menu. (see 3.2.2 Opening expanded menu)
No action for 10 seconds	If you do not perform any action on the display for 10 seconds, the display either jumps back to the higher-level menu or directly to the status display.

Symbol	Description
Open door and close it again.	If you open the door and immediately close it again, the display jumps directly back to the status display.

Note: Illustrations of the display are shown in the English version.

3.2 Menus

The appliance functions are distributed over various menus:

Menu	Description
Main menu	When you switch the appliance on, you are automatically in the main menu. From here you can navigate to the most important appliance functions, to the Settings menu and to the Advanced menu.
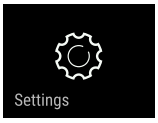 Settings menu	The Settings menu contains additional appliance functions for setting up your appliance.
Advanced menu	The advanced menu contains special appliance functions for setting up your appliance. Access to the Advanced menu is protected by the numerical code **1 5 1**.

3.2.1 Opening the Settings menu

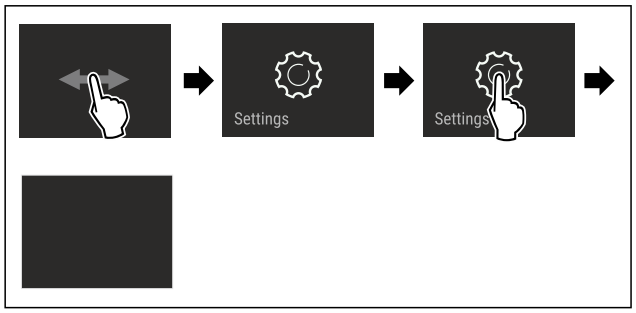

Fig. 2 Example illustration

▶ Carry out action steps according to the illustration.
▷ Settings menu is open.
▶ If necessary: Navigate to the desired function.

3.2.2 Opening expanded menu

Fig. 3

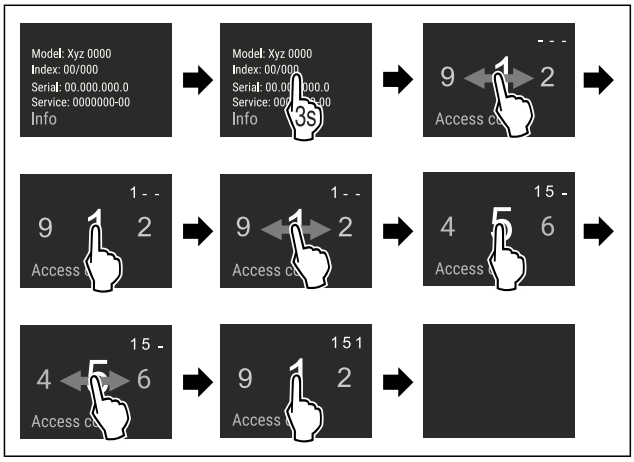

*Fig. 4 Example illustration, access with numerical code **151***

▶ Carry out action steps according to the illustration.
▷ Expanded menu is open.
▶ If necessary: Navigate to the desired function.

3.3 Sleep mode

If you do not touch the display for 1 minute, the display switches to sleep mode. In sleep mode, the display brightness is dimmed.

3.3.1 Ending sleep mode

▶ Touch the display briefly with your finger.
▷ Sleep mode is ended.

4 Start-up

4.1 Switching on appliance (first use)

Make sure that the following requirements are fulfilled:

- ❑ The appliance has been installed and connected in accordance with the installation instructions.
- ❑ All adhesive strips, adhesive and protective films and transport locks are removed from inside and on the appliance.
- ❑ All marketing leaflets are removed from the drawers.
- ❑ You are familiar with the functionality of the Touch & Swipe display. (see 3 Functionality of the Touch & Swipe display)

Switch on the appliance using the Touch & Swipe display.

▶ If the display is in sleep mode: Briefly touch the display.
▶ Carry out action steps according to the illustration.

*** Depending on model and options**

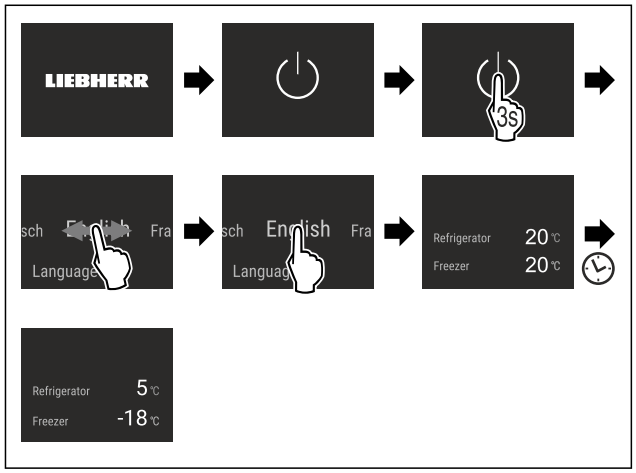

Fig. 5 Example illustration

▷ Status display appears.
▷ The appliance cools to the temperature set at the factory.
▷ The appliance starts in demo mode (status display with DEMO appears): If the appliance starts in demo mode, you can deactivate demo mode within the next 5 minutes. (see Demo mode)

More information:

- Start the EasyTwist-Ice for the first time. (see 4.2 Starting the EasyTwist-Ice for the first time)
- Start the SmartDevice for the first time. (see 2.3 SmartDevice) and (see WiFi)

Note
The manufacturer recommends:
▶ Stock with food: Wait for around 6 hours until the set temperature is reached.
▶ **Store frozen foods** at -18 °C (-0 °F) or colder.
▶ Observe the notes on storing food. (see 5.1 Information regarding storage)

Note
Accessories can be purchased from the Liebherr Service Center. The address for your respective country can be found on the back of the instructions.

4.2 Starting the EasyTwist-Ice for the first time

If your appliance is equipped with EasyTwist-Ice, you must clean the EasyTwist-Ice **before using it for the first time**.

Make sure that the following requirements are fulfilled:

❑ The appliance is properly connected.

▶ Clean the EasyTwist-Ice. (see 9.5.5 Cleaning Easy-Twist-Ice)
▶ Fill the water tank. (see Filling the water tank)

5 Storage

5.1 Information regarding storage

WARNING
Risk of fire from electrical appliances!
If you use electrical devices in the food area of your appliance, they may case a fire.
▶ Do not use electrical devices in the food area of the appliance if they have not been recommended by the manufacturer.

Note
Insufficient ventilation results in an increase in energy consumption and reduction of the refrigerating performance
▶ Always keep the air slots unobstructed.

Observe the following specifications for storage:

- Keep the air vents on the fan free.
- In the freezer compartment: Package food properly.
- Package or cover foods that readily take on or give off odors or taste in closed containers.
- Package raw meat or fish in clean, closed containers. This will prevent meat or fish from touching or dripping onto other food.
- Keep liquids in closed containers.
- Leave space between goods to ensure good air circulation.
- Store food according to the instructions on the packaging.
- Always observe the best-before date indicated on the packaging.

Note
Failure to follow these guidelines can lead to foodstuffs spoiling.

5.2 Fridge compartment

The air circulation in the appliance creates different temperature zones. You will find the different temperature zones in the appliance and equipment overview. (see 2.2 Overview of appliances and equipment)

5.2.1 Arranging your food properly

▶ Upper area and door: Store butter, cheese, canned food and tubes.
▶ Coldest temperature zone: Store perishable foods such as pre-cooked meals, meat and lunch meats.
▶ Bottom shelf: Store raw meat or fish.

5.3 EasyFresh

EasyFresh is great for non-packaged foods, such as fruit and vegetables.

The humidity in the compartment depends on the moisture content of the refrigerated goods and the frequency with which it is opened. You can control the humidity. (see 8.6 Lid for EasyFresh-safe)

5.3.1 Arranging your food properly

▶ Store unpackaged fruit and vegetables.
If the humidity is too high:
▶ Regulate the humidity.

5.4 Freezer compartment

Here, a dry, frosty storage climate is created at -18 °C (-0 °F). The frosty storage climate is suitable for storing frozen food for several months, for making ice cubes or freezing fresh food.

5.4.1 Freezing food

Freezing quantity

The maximum amount of fresh food that you can freeze within 24 hours is specified on the type plate (see 10.5 Rating plate) under “Freezing capacity ... kg/ 24h.”

To ensure that food quickly freezes through, adhere to the following quantities per package:

- Fruit and vegetables up to 1 kg (2.20 lb)
- Meat up to 2.5 kg (5.51 lb)

Freezing food using SuperFrost

Depending on the amount of food to be frozen, you can activate SuperFrost before freezing to reach lower freezing temperatures. (see SuperFrost)

▶ Activate SuperFrost if the amount of food you have to freeze is more than approx. 2 kg (4.41 lb).

The time at which you activate SuperFrost depends on the amount of food you have to freeze:

Freezing quantity	Time at which you should activate SuperFrost
Small amount of food to freeze	Activate SuperFrost about 6 hours before freezing. As soon as the appliance automatically deactivates SuperFrost you can begin rearranging your food items.
Maximum amount of food to freeze	Activate SuperFrost about 24 hours before freezing. As soon as the appliance automatically deactivates SuperFrost you can begin rearranging your food items.

Arranging your food properly

CAUTION
Risk of injury from broken glass!
Bottles and cans with beverages can burst during freezing. This applies in particular to carbonated beverages.
▶ Only freeze bottles and cans with beverages if you have activated the BottleTimer function in the SmartDevice app.

Freezing quantity	Arranging your food properly
Small amount of food to freeze	Place packaged food in the top drawer. If possible, place groceries at the back of the drawer near the rear wall.
Maximum amount of food to freeze	Distribute packaged groceries throughout all drawers, but only store food that is already deep frozen in the bottom drawer. If possible, place groceries at the back of the drawer near the rear wall.

5.4.2 Defrosting food

WARNING
Danger of food poisoning!
▶ Do not re-freeze defrosted food.
▶ Use defrosted foodstuff as quickly as possible.

You can defrost food in several ways:

- In the fridge compartment
- In the microwave
- In the oven/fan-assisted oven
- At room temperature

▶ Take out only as much food as necessary.

5.5 Storage times

The storage times given are guidelines

Food with a “use by” date must still be consumed by the date indicated on the package

5.5.1 Fridge

The best-before date stated on the packaging applies.

* Depending on model and options

5.5.2 Freezer

Guidelines for storage periods for various foods		
Ice cream	at -18 °C (-0 °F)	2 to 6 months
Sausage, ham	at -18 °C (-0 °F)	2 to 3 months
Bread, bakery products	at -18 °C (-0 °F)	2 to 6 months
Game, pork	at -18 °C (-0 °F)	6 to 9 months
Fish, fatty	at -18 °C (-0 °F)	2 to 6 months
Fish, lean	at -18 °C (-0 °F)	6 to 8 months
Cheese	at -18 °C (-0 °F)	2 to 6 months
Poultry, beef	at -18 °C (-0 °F)	6 to 12 months
Vegetables, fruit	at -18 °C (-0 °F)	6 to 12 months

6 Energy saving

- Always ensure good ventilation. Keep clear of obstruction all ventilation openings in the appliance enclosure or in the structure for building-in.
- Never block air slits in the fan.
- Do no set up the appliance in an area with direct sunlight, next to a heating unit or similar.
- If you set up the appliance directly next to an oven, its energy consumption may increase slightly. This depends on the service life and how often the oven is used.
- Energy consumption depends on installation conditions such as the ambient temperature (see 2.4 Range of appliance use) . A warmer ambient temperature can increase the energy consumption.
- Avoid opening the appliance door for any longer then necessary
- The lower the temperature is set the higher the energy consumption.
- Sort your food items: home.liebherr.com/food.
- All food stored in the appliance should be well wrapped and covered. This prevents frost buildup.
- Only take food out for as long as necessary so that it does not get too warm.
- Insertion of warm foods: first let the food cool down to room temperature.
- Defrost frozen food in the fridge
- For longer periods of absence, use HolidayMode (see HolidayMode) .

7 Use

7.1 Controls and displays

7.1.1 Status display

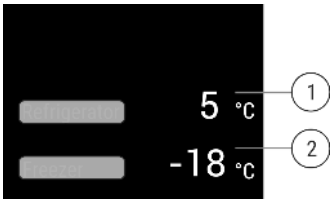

Fig. 6 Status display shows the actual temperature.

(1) Fridge compartment temperature display **(2)** Freezer compartment temperature display

The status display shows the actual temperature and is the initial display. You can navigate from there to the functions and settings.

7.1.2 Display symbols

The display symbols provide information about the current appliance status.

Symbol	Appliance status
	Standby The appliance or temperature zone is turned off.
	Flashing number Appliance is working. Temperature flashes until the set temperature is reached.
	Flashing symbol Appliance is working. Setting is made.

7.2 Appliance functions

7.2.1 Notes on the appliance functions

The appliance functions are set at the factory so that your appliance is fully functional.

Before you alter, activate or deactivate the appliance functions, make sure that the following requirements are met:

- ❑ You have read and understood the descriptions of how the display works. (see 3 Functionality of the Touch & Swipe display)
- ❑ You have familiarized yourself with the operating and display elements of your appliance.

Switching appliance off and on

This function switches the entire appliance on and off.

Switching off the appliance

If you switch off the appliance, the settings that were made before remain stored.

Make sure that the following requirements are fulfilled:

- ❑ Handling instructions (see 11 Decommissioning) have been completed.

Fig. 7

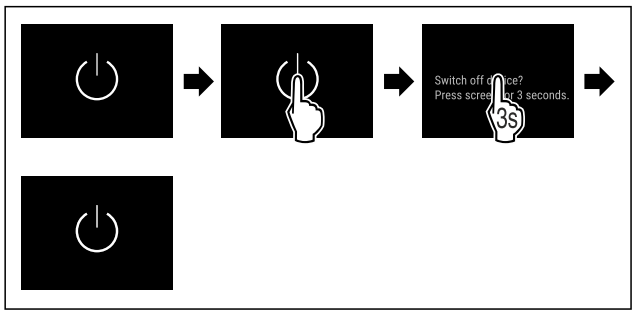

Fig. 8

▶ Carry out action steps according to the illustration.
▷ Appliance is switched off.
▷ Standby symbol appears in the display.
▷ Display turns black.

Switching on the appliance

If the display is in sleep mode:

▶ Briefly touch the display.

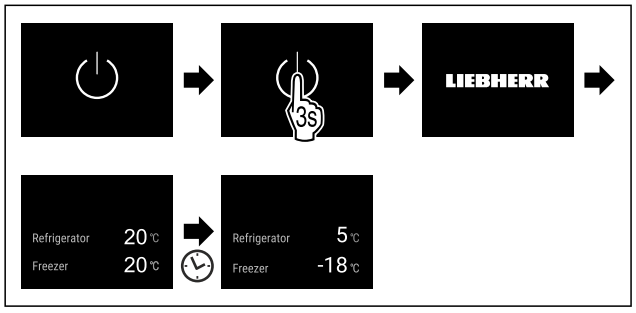

Fig. 9 Example illustration

▶ Carry out action steps according to the illustration.
If the appliance starts in demo mode:

▶ Deactivate demo mode. (see Deactivating demo mode)
▷ Appliance is switched on.
▷ Previously made settings are re-established.
▷ The appliance cools to the set target temperature.

Switching temperature zone off and on

You can switch temperature zones of the appliance off independently.

Switching the fridge compartment off

Make sure that the following requirements are fulfilled:

- ❑ Refrigerator compartment has been emptied.

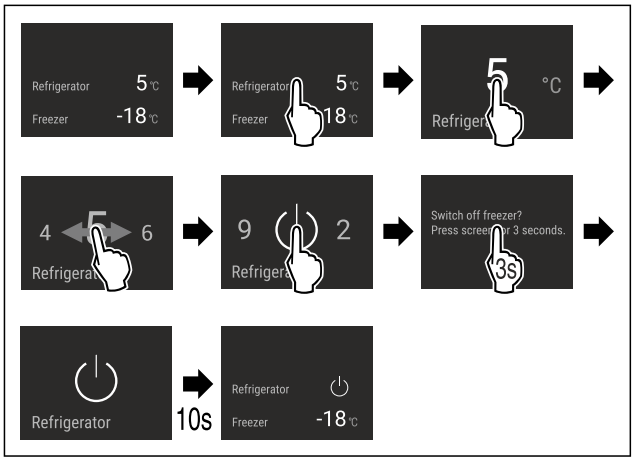

Fig. 10 Example illustration

▶ Carry out action steps according to the illustration.
▷ Refrigerator compartment is switched off.

Switching the freezer compartment off

Make sure that the following requirements are fulfilled:

- ❑ Freezer compartment has been emptied.
- ❑ EasyTwist-Ice water tank is empty.

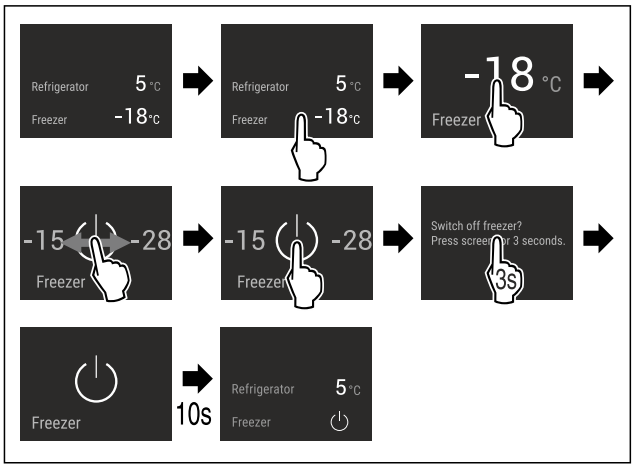

Fig. 11 Example illustration

▶ Carry out action steps according to the illustration.
▷ Freezer compartment is switched off.

Switching the fridge compartment on

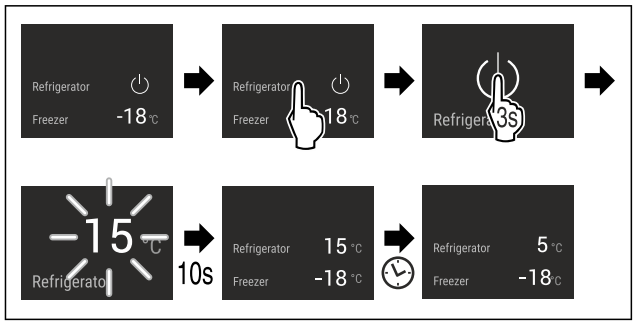

Fig. 12 Example illustration

▶ Carry out action steps according to the illustration.
▷ Refrigerator compartment is switched on.
▷ The appliance cools to the last set temperature.

Switching the freezer compartment on

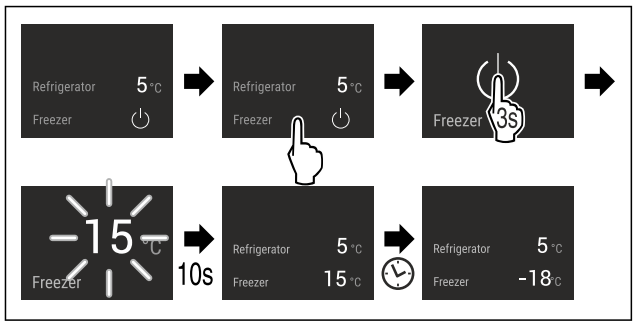

Fig. 13 Example illustration

▶ Carry out action steps according to the illustration.
▷ Freezer compartment is switched on.
▷ The appliance cools to the last set temperature.

WiFi

Use this function to connect your appliance to WiFi. You can then operate it via the SmartDevice app on a mobile device. You can also use this function to disconnect or reset the WiFi connection.

More information on the SmartDevice: (see 2.3 SmartDevice)

Note
The SmartDevice function is not available in the following countries: Russia, Belarus, Kazakhstan.

Establishing the WiFi connection for the first time

Make sure that the following requirements are fulfilled:

❑ You have installed the SmartDevice app (see apps.home.liebherr.com).
❑ Registration in the SmartDevice app is completed.

Fig. 14

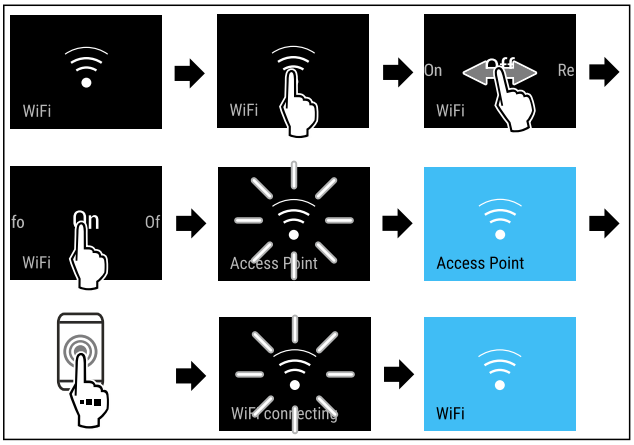

Fig. 15

▶ Carry out action steps according to the illustration.
▷ Connection is established.

Disconnecting from the WiFi

Fig. 16

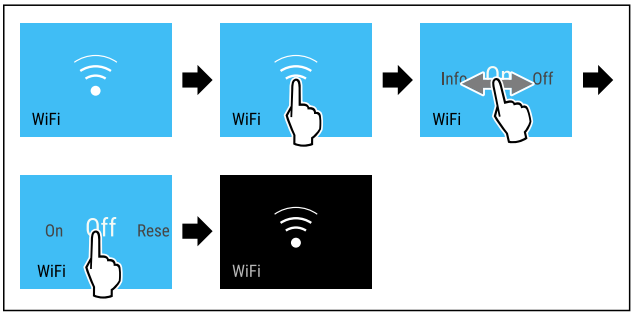

Fig. 17

▶ Carry out action steps according to the illustration.
▷ There is no connection.

Resetting the WiFi connection

Fig. 18

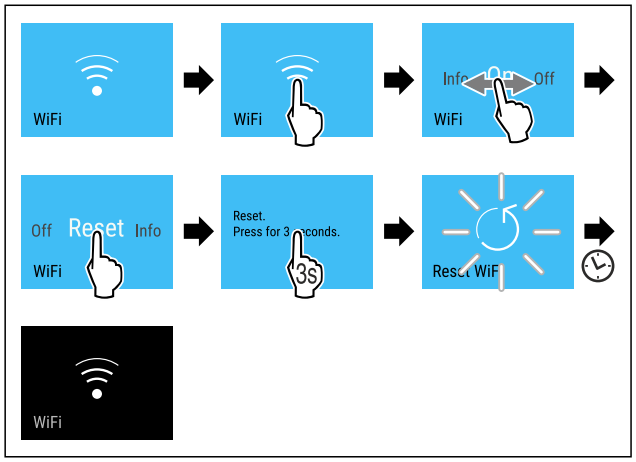

Fig. 19

▶ Carry out action steps according to the illustration.
▷ WiFi connection and other WiFi settings are reset to factory settings.

Showing information about the WiFi connection

Fig. 20

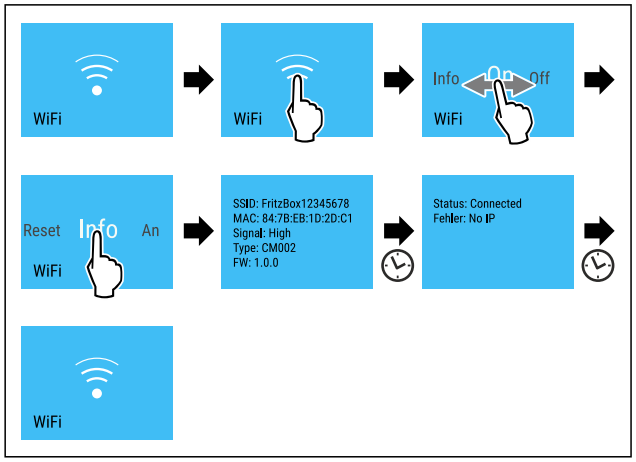

Fig. 21

▶ Carry out action steps according to the illustration.

5 °C Temperature

Use this function to set the temperature.

The temperature depends on the following factors:

- How often the door is opened
- How long the door is open
- The room temperature of the installation site
- Type, temperature and amount of food

Temperature zone	Factory-set temperature	Recommended setting
5 °C Fridge section	5 °C (41 °F)	4 °C (39 °F)
-18 °C Freezer section	-18 °C (-0 °F)	-18 °C (-0 °F)

Setting the temperature in the fridge section

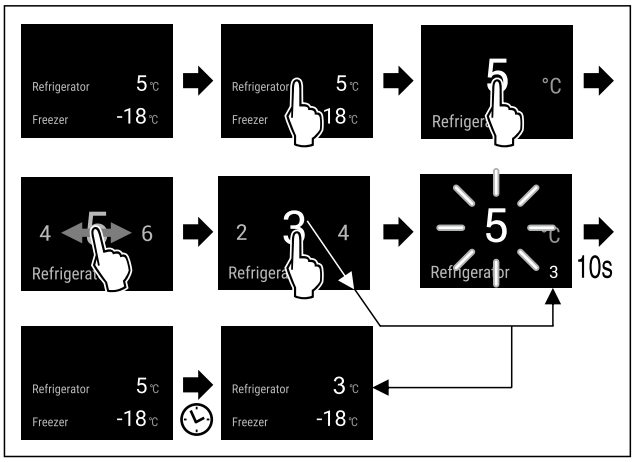

Fig. 22 Example illustration

▶ Carry out action steps according to the illustration.
▷ Temperature is set.

Setting the temperature in the freezer section

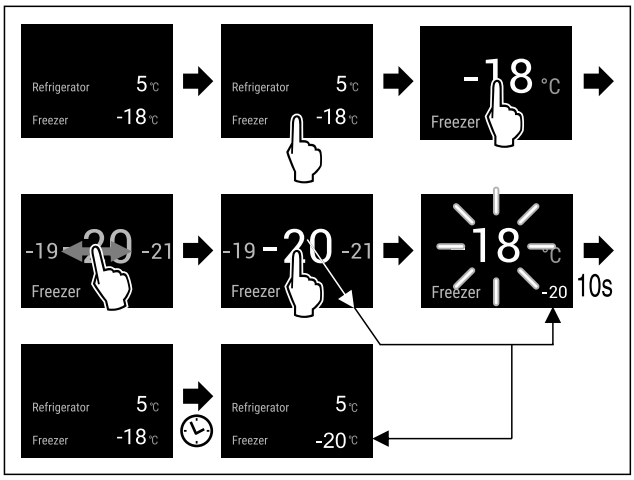

Fig. 23

▶ Carry out action steps according to the illustration.
▷ Temperature is set.

°C/°F Temperature unit

Use this function to set the temperature unit. You can set the temperature unit in either degrees Celsius or degrees Fahrenheit.

Setting the temperature unit

Fig. 24

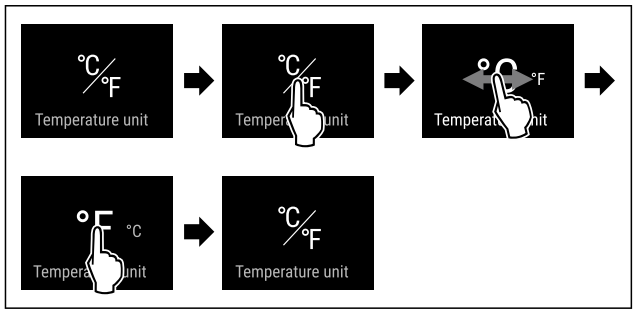

Fig. 26 Example illustration: Switching between degrees Celsius or degrees Fahrenheit.

▶ Carry out action steps according to the illustration.
▷ Temperature unit is set.

D1 D-Value

Setting the D-Value

Fig. 27

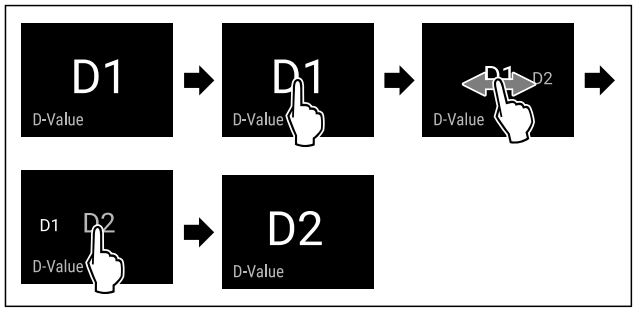

Fig. 29 Example illustration: Switching from D1 to D2.

▶ Carry out action steps according to the illustration.
▷ The D-Value is set.

SuperCool

This function activates or deactivates SuperCool. If you activate SuperCool the appliance increases the cooling capacity. This allows you to achieve lower cooling temperatures. You can activate SuperCool if you want to quickly cool large volumes of food.

If the function is active, the appliance operates at a higher output. As a result, the operating noise of the appliance may be temporarily louder, while energy consumption increases.

Activating SuperCool

Time for activating the function:

- If you want to store fresh food in the fridge section: Activate the function when storing food.

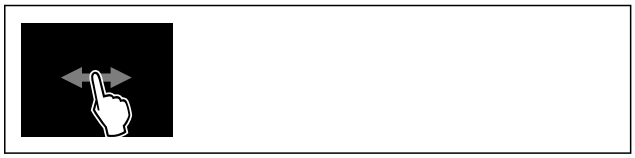

Fig. 30

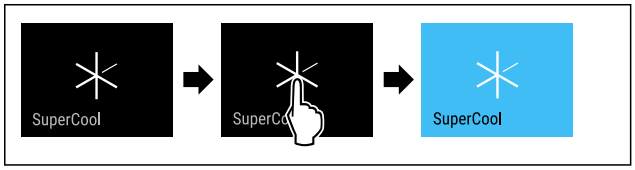

Fig. 31

▶ Carry out action steps according to the illustration.
-or-
▶ Activating with the SmartDevice app.

▷ SuperCool is activated.
▷ Temperature display turns blue.

Deactivating SuperCool

SuperCool is automatically deactivated after 18 hours. However, you can also manually deactivate SuperCool at any time:

Fig. 32

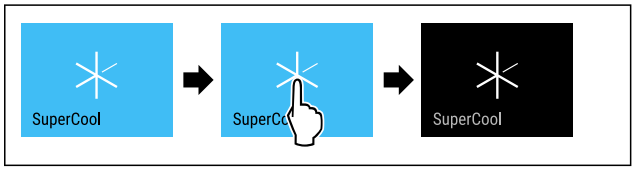

Fig. 33

▶ Carry out action steps according to the illustration.
-or-
▶ Deactivating with the SmartDevice app.

▷ SuperCool is deactivated.
▷ Appliance continues to run in normal operation.
▷ The appliance first cools to the set temperature.

PowerCool

This function activates or deactivates PowerCool. PowerCool ensures optimum temperature layers to keep your food cool.

This function relates to the fridge compartment.

Application:

- At high room temperature (starting at approx. 35 °C (95 °F))
- At high humidity, e. g. on summer days
- While storing moist product to prevent condensation in the interior

Note
The fan can run even if the function is deactivated. It ensures optimum temperature distribution in the appliance.

If the function is active, the appliance operates at a higher output. As a result, the operating noise of the appliance may be temporarily louder, while energy consumption increases.

Activating PowerCool

Fig. 34

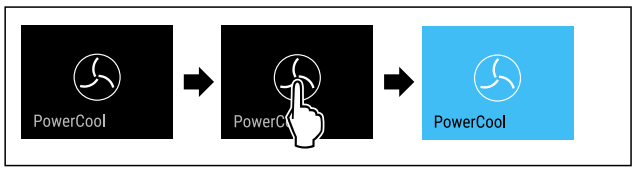

Fig. 35

▶ Carry out action steps according to the illustration.
▷ PowerCool is activated.

Deactivating PowerCool

Fig. 36

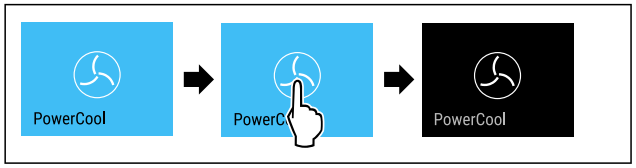

Fig. 37

▶ Carry out action steps according to the illustration.
▷ PowerCool is deactivated.

VarioTemp

This function allows you to use the freezer compartment as an additional cooling zone. You can set the temperature from -2 °C (28 °F) to 14 °C (57 °F). If you activate this function, it may cause more noise. However, the appliance is still fully functional.

For storage of foodstuff in the freezer compartment with the VarioTemp function activated, Liebherr recommends:

Temperature range	Foodstuff
4 °C (39 °F) to 9 °C (46 °F)	Cooked foods, cheese, preserves
0 °C (32 °F)	Packaged fruit and vegetables
-2 °C (28 °F)	Fresh fish and seafood
10 °C (50 °F) to 14 °C (57 °F)	Cold-sensitive foodstuffs such as sweet potatoes, pumpkin or exotic fruits, food or drinks that should not be eaten too cold

Activating VarioTemp

Make sure that the following requirements are fulfilled:

❑ The EasyTwist-Ice has been cleaned. (see 9.5.5 Cleaning EasyTwist-Ice)

WARNING
Danger of food poisoning!
▶ Do not re-freeze defrosted food.
▶ Use defrosted foodstuff as quickly as possible.

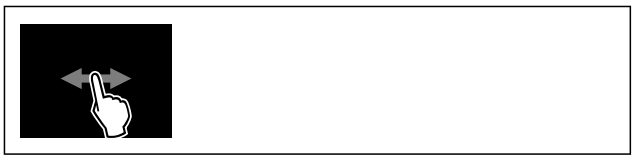

Fig. 38

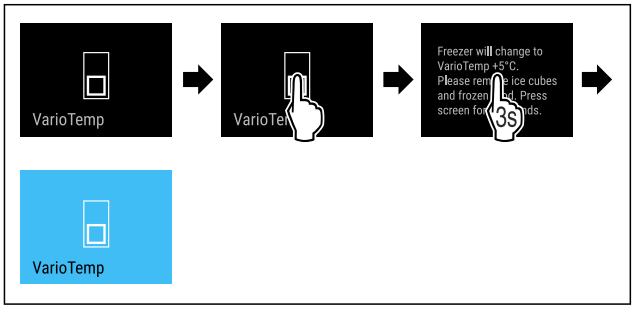

Fig. 39

▶ Carry out steps according to the illustration.
▷ VarioTemp is activated.
▷ VarioTemp is set to the preselected value.
▷ The status display does not show the set temperature until it is reached.

Adjusting VarioTemp

Make sure that the following requirements are fulfilled:

❑ The VarioTemp has been activated. (see Activating VarioTemp)

WARNING

Danger of food poisoning!

▶ Do not re-freeze defrosted food.

▶ Use defrosted foodstuff as quickly as possible.

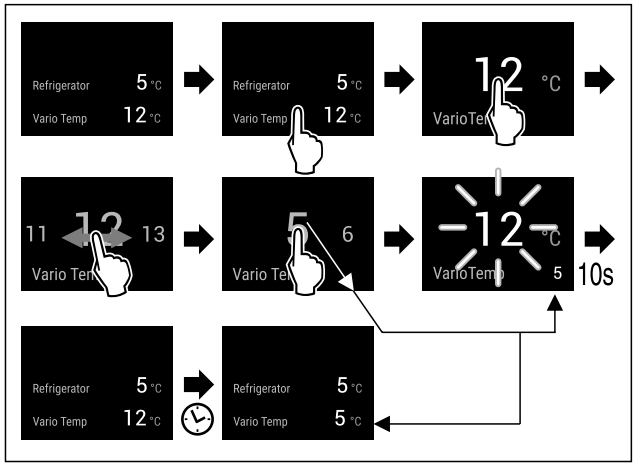

Fig. 40 Example illustration: Change VarioTemp from 12 °C (54 °F) to 5 °C (41 °F) for a fridge-freezer combination with EasyFresh.

▶ Carry out steps according to the illustration.

▷ VarioTemp is adjusted.

▷ The status display does not show the new set temperature until it is reached.

Deactivating VarioTemp

Fig. 41

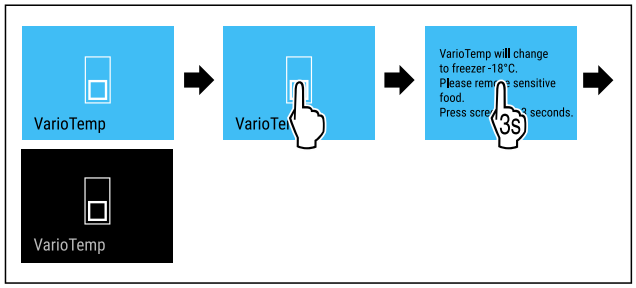

Fig. 42

▶ Carry out steps according to the illustration.

▷ VarioTemp is deactivated.

▷ The freezer compartment is cooled to the preset temperature.

SuperFrost

This function activates or deactivates SuperFrost. Activating SuperFrost the appliance increases the freezing capacity. This allows you to achieve lower freezer temperatures.

Application:

- Quickly freezing fresh food through to the core. This ensures that the nutrition value, look, and taste of the food is preserved.
- Increasing cold reserves in stored frozen food before defrosting the appliance.

If the function is active, the appliance operates at a higher output. As a result, the operating noise of the appliance may be temporarily louder, while energy consumption increases.

Activating SuperFrost

Make sure that the following requirements are fulfilled:

❑ The freezing volume and time for SuperFrost activation are taken into account. (see Freezing food using SuperFrost)

❑ VarioTemp is deactivated. (see VarioTemp)

Fig. 43

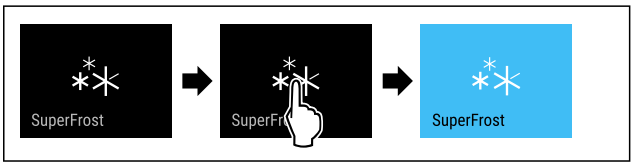

Fig. 44

▶ Carry out action steps according to the illustration.

-or-

▶ Activating with the SmartDevice app.

▷ SuperFrost is activated.

▷ Temperature display turns blue.

Deactivating SuperFrost

SuperFrost is automatically deactivated after 56 to 72 hours depending on the volume of the stored food. However, you can also manually deactivate SuperFrost at any time:

Fig. 45

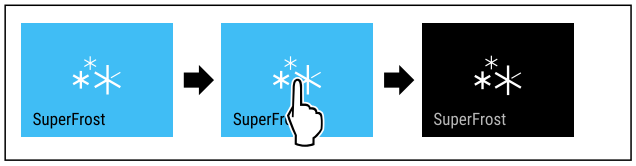

Fig. 46

▶ Carry out action steps according to the illustration.

-or-

▶ Deactivating with the SmartDevice app.

▷ SuperFrost is deactivated.
▷ Appliance continues to run in normal operation.
▷ The appliance first cools to the set temperature.

Start defrost cycle

Use this function to start the automatic defrost cycle manually if the defrost cycle does not start automatically in case of an error.

Starting the defrost cycle

Fig. 47

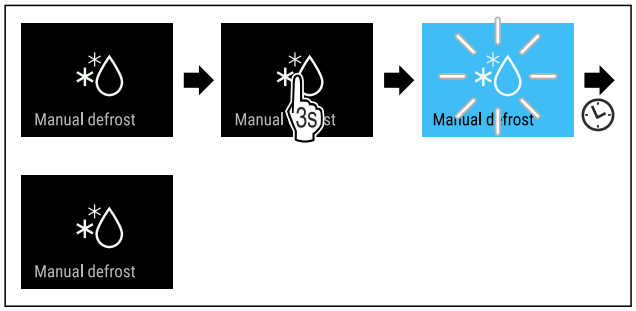

Fig. 48

▶ Carry out action steps according to the illustration.
▷ Defrost cycle has started: Symbol flashes until the defrost cycle is automatically completed.
▷ When the defrost cycle is completed: Appliance continues to run in normal operation.

Canceling the defrost cycle

The defrost cycle is automatically completed. However, you can also cancel the defrost cycle at any time during the defrosting:

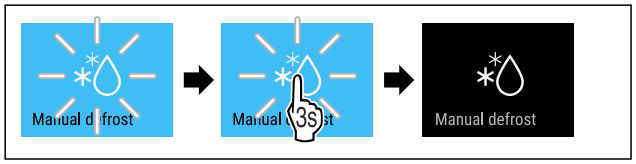

Fig. 49

▶ Carry out action steps according to the illustration.
▷ Defrost cycle is canceled.
▷ Appliance continues to run in normal operation.

PartyMode

This function activates and deactivates PartyMode. PartyMode activates different functions that are useful for a party.

PartyMode activates the following functions:

- SuperCool (see SuperCool)
- SuperFrost (see SuperFrost)

You can set all listed functions individually and flexibly. By deactivating PartyMode all changes are discarded.

If the function is active, the appliance operates at a higher output. As a result, the operating noise of the appliance may be temporarily louder, while energy consumption increases.

Activating PartyMode

Fig. 50

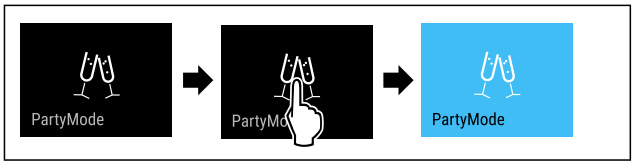

Fig. 51

▶ Carry out action steps according to the illustration.
▷ PartyMode and the corresponding functions are activated.
▷ Temperature display turns blue.
▷ The current temperature flashes until the target temperature is reached.

Deactivating PartyMode

PartyMode is automatically deactivated after 24 hours. However, you can also manually deactivate PartyMode at any time:

Fig. 52

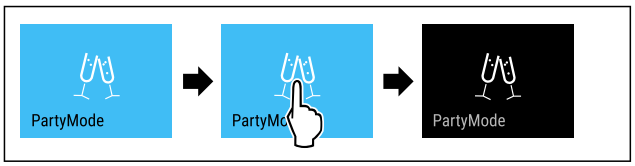

Fig. 53

▶ Carry out action steps according to the illustration.
▷ PartyMode is deactivated.

*** Depending on model and options**

▷ The appliance first cools to the set temperature: The current temperature flashes until the target temperature is reached.

HolidayMode

Use this function to activate or deactivate HolidayMode. If you activate HolidayMode the fridge section is set to 15 °C (59 °F). This helps you save energy if you are away for a longer period of time and avoid bad smells and mold formation.

Appliance status with active HolidayMode
Fridge section cools to 15 °C (59 °F).
EasyFresh cools down to 15 °C (59 °F).
The set temperature is maintained in the freezer section.
PartyMode is deactivated.
SuperCool is deactivated.
PowerCool is deactivated.

Activating HolidayMode

▶ Empty the fridge section completely.
▶ Empty EasyFresh completely.

Fig. 54

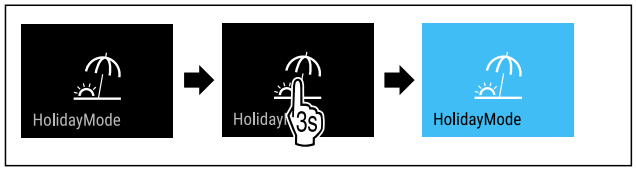

Fig. 55

▶ Carry out action steps according to the illustration.
▷ HolidayMode is activated.
▷ Temperature display turns blue and shows the HolidayMode symbol.

Deactivating HolidayMode

Fig. 56

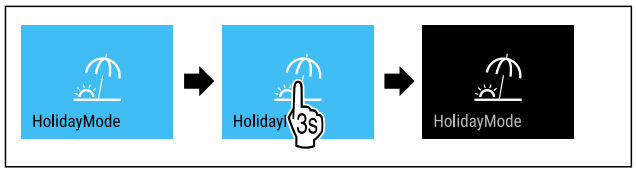

Fig. 57

▶ Carry out action steps according to the illustration.
▷ HolidayMode is deactivated.
▷ The appliance first cools to the set temperature.

SabbathMode

This function activates and deactivates SabbathMode. If you activate this function, some electronic functions are switched off. Your appliance thereby meets the religious requirements of Jewish holidays such as the Sabbath and complies with STAR-K Kosher certification.

Appliance status with active SabbathMode
The status display continuously shows SabbathMode.
All functions in the display except the **Deactivating SabbathMode function** are disabled.
Active functions remain active.
The display remains bright when you close the door.
The interior lighting is deactivated.
Memories are not listed. The set time interval is stopped.
Memories and warnings are not displayed.
There is no door alarm.
There is no temperature alarm.
The defrost cycle operates only for the specified time without taking into account the appliance usage.
After a power failure, the device returns to SabbathMode.

Appliance status

Note
This appliance has certification from the "Institute for Science and Halacha". (www.machonhalacha.co.il)

You can find a list of STAR-K-certified appliances at www.star-k.org/appliances.

Activating SabbathMode

WARNING
Danger of poisoning from spoiled food!
If you have SabbathMode activated and a power failure occurs, no message appears in the status display about the power failure. Once the power is restored, the appliance continues to operate in SabbathMode. The power failure may mean that food spoils and the consumption of this food could lead to food poisoning.
After a power failure:
▶ Do not consume food that has been frozen and thawed.

Fig. 58

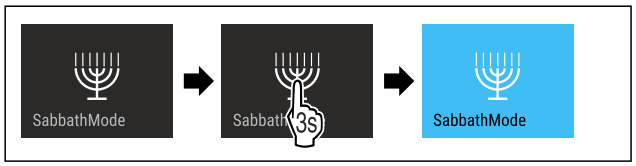

Fig. 59

▶ Carry out action steps according to the illustration.
▷ SabbathMode is activated.
▷ Status display continuously shows SabbathMode.

Deactivating SabbathMode

SabbathMode is automatically deactivated after 80 hours. However, you can also manually deactivate SabbathMode at any time:

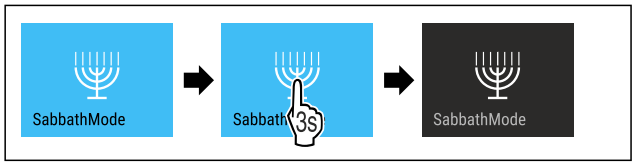

Fig. 60

▶ Carry out action steps according to the illustration.
▷ SabbathMode is deactivated.

EnergySaver

Use this function to activate or deactivate energy saving mode. If you activate energy saving mode, energy consumption drops and the temperature in the appliance increases. Food remains fresh, but shelf life is reduced.

Temperature zone	Recommended setting (see Setting the temperature in the fridge section)	Temperature while EnergySaver is active
5 °C Fridge section	4 °C (39 °F)	7 °C (45 °F)
-18 °C Freezer section	-18 °C (-0 °F)	-16 °C (3 °F)

Temperatures

Activating EnergySaver

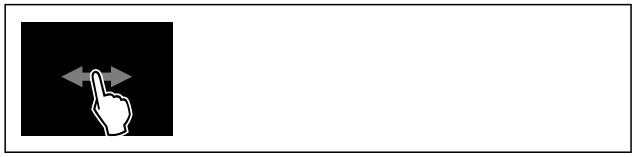

Fig. 61

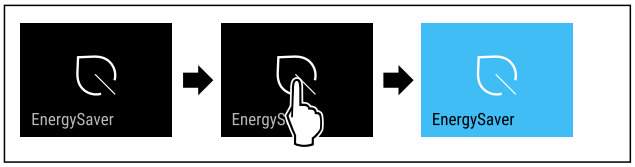

Fig. 62

▶ Carry out action steps according to the illustration.
▷ Energy saving mode is activated.

Deactivating EnergySaver

Fig. 63

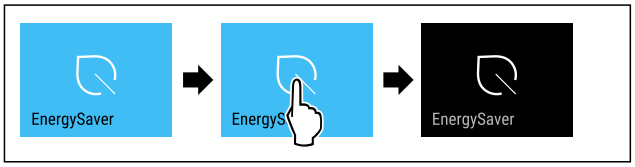

Fig. 64

▶ Carry out action steps according to the illustration.
▷ Energy saving mode is deactivated.

CleaningMode

This function activates and deactivates CleaningMode. CleaningMode enables you to comfortably clean the appliance.

This setting relates to the fridge compartment.

Application:

- Clean the fridge compartment. (see 9.5 Cleaning the appliance)

Appliance status with active CleaningMode
The status display continuously shows CleaningMode.
The fridge section is switched off.
The interior lighting is activated.
Reminders and warnings are not displayed. No signal tone is sounded.

Appliance status

Activating CleaningMode

Fig. 65

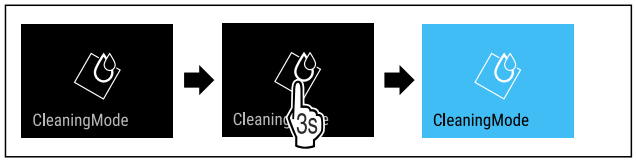

Fig. 66

▶ Carry out action steps according to the illustration.
▷ CleaningMode is activated.
▷ Status display continuously shows CleaningMode.

Deactivating CleaningMode

CleaningMode is automatically deactivated after 60 minutes. However, you can also manually deactivate CleaningMode at any time:

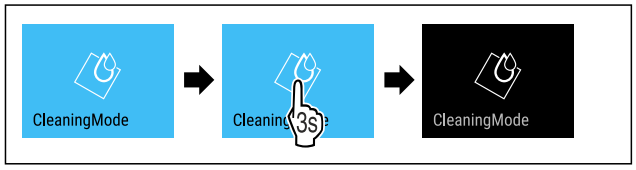

Fig. 67

▶ Carry out action steps according to the illustration.
▷ CleaningMode is deactivated.
▷ The appliance first cools to the set temperature.

Display Brightness

Use this function to set the brightness of the display gradually.

You can set the following brightness levels:

- 40 %
- 60 %
- 80 %
- 100% (default setting)

Setting the brightness

Fig. 68

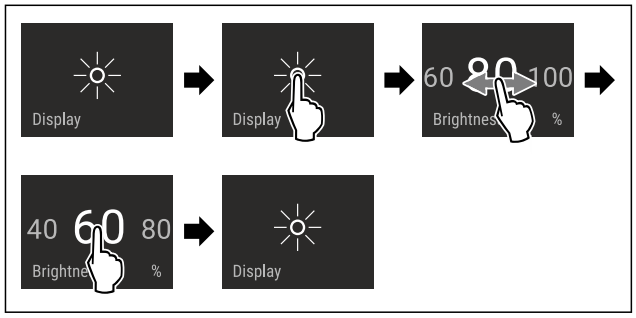

Fig. 69 Example illustration: Switching from 80 % to 60 %.

▶ Carry out action steps according to the illustration.
▷ Brightness is set.

Door alarm

Use this function to activate or deactivate the door alarm. The door alarm sounds if the door is open for too long. The door alarm is activated upon delivery. You can set how long to door can remain open until the door alarm sounds.

You can set the following values:

- 1 minute
- 2 minutes
- 3 minutes
- Off

Setting the door alarm

Fig. 70

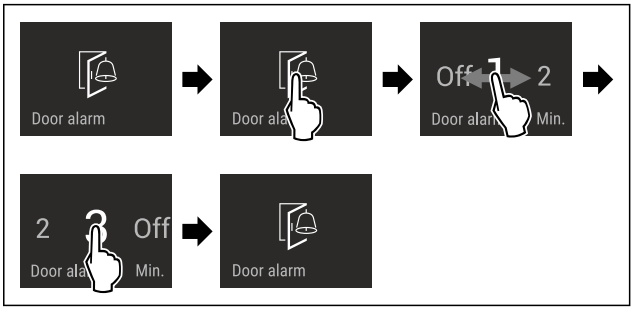

Fig. 71 Example illustration: Changing the door alarm from 1 minute to 3 minutes.

▶ Carry out action steps according to the illustration.
▷ Door alarm is set.

Deactivating door alarm

Fig. 73

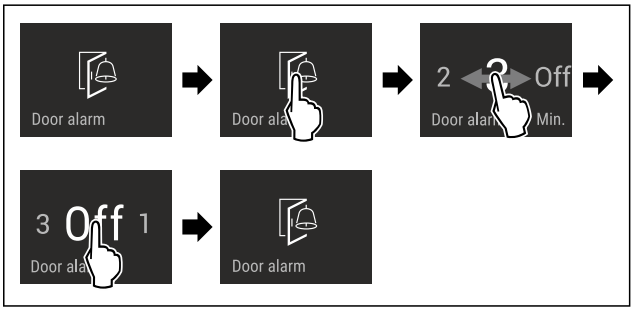

Fig. 74

▶ Carry out action steps according to the illustration.
▷ Door alarm is deactivated.

Input lock

This function activates and deactivates the input lock. The input lock prevents the appliance from being operated accidentally, e. g. by children.

Application:

- Prevent unintentional changes of functions.
- Prevent switching off of the appliance.
- Prevent unintentional temperature setting.

Activating the input lock

If you activate the input lock, you can continue to navigate in the menus, however you cannot select or modify other functions.

Fig. 75

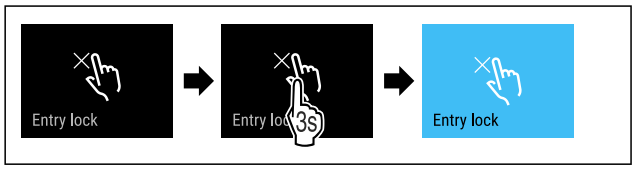

Fig. 76

▶ Carry out action steps according to the illustration.
▷ Input lock is activated.

Deactivating the input lock

Fig. 77

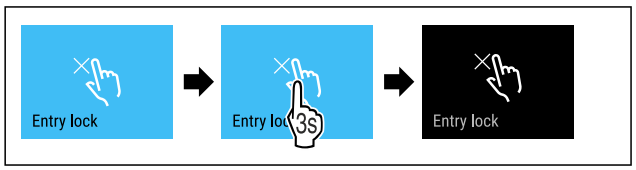

Fig. 78

▶ Carry out action steps according to the illustration.
▷ Input lock is deactivated.

Language

Use this function to set the display language.

You can set the following languages:

- German
- English
- French
- Spanish
- Italian
- Dutch
- Czech
- Polish
- Portuguese
- Bulgarian
- Russian
- Chinese

Setting the language

Fig. 79

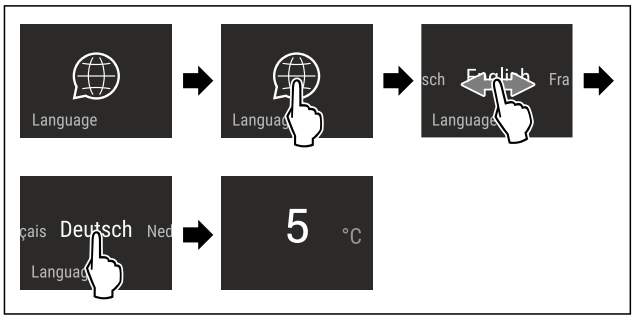

Fig. 80 Example illustration depending on the language and temperature

▶ Carry out action steps according to the illustration.
▷ Language is set.
▷ Display jumps back to the status display.

Appliance information

Use this function to display the model name, index, serial number and service number of your appliance. You will need the appliance information when you contact customer service. (see 10.4 Customer Service)

You also use this function to open the expanded menu. (see 3 Functionality of the Touch & Swipe display)

Display appliance information

Fig. 81

Fig. 82

▶ Carry out action steps according to the illustration.
▷ Display shows the appliance information.

Software

Use this function to display the software version of your appliance.

Display software version

Fig. 83

Fig. 84

▶ Carry out action steps according to the illustration.
▷ Display indicates the software version.

Reminder

Use this function to activate or deactivate reminder. This function is activated upon delivery.

The following reminders will then appear if the function is activated:

- Replace the FreshAir activated charcoal filter (see Replace FreshAir activated charcoal filter)

Activating reminder

Fig. 85

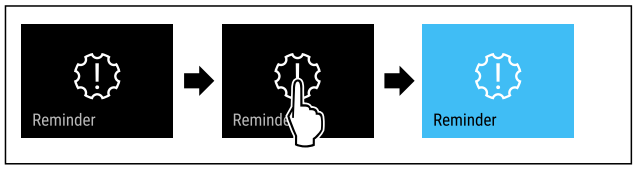

Fig. 86

▶ Carry out action steps according to the illustration.
▷ Reminder is activated.

Deactivating reminder

Fig. 87

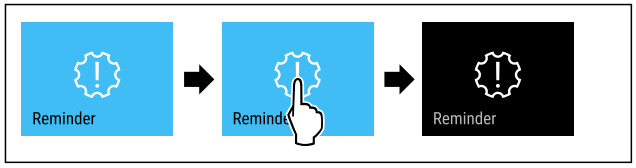

Fig. 88

▶ Carry out action steps according to the illustration.
▷ Reminder is deactivated.

Demo mode

Demo mode is a special feature for dealers who want to demonstrate appliance features. If you activate demo mode, all refrigeration functions are deactivated.

If you switch on your appliance and “Demo” appears in the status display, then demo mode is already activated.

If you activate and then deactivate demo mode, the appliance will be reset to factory defaults. (see Resetting to factory settings)

Activating demo mode

Fig. 89

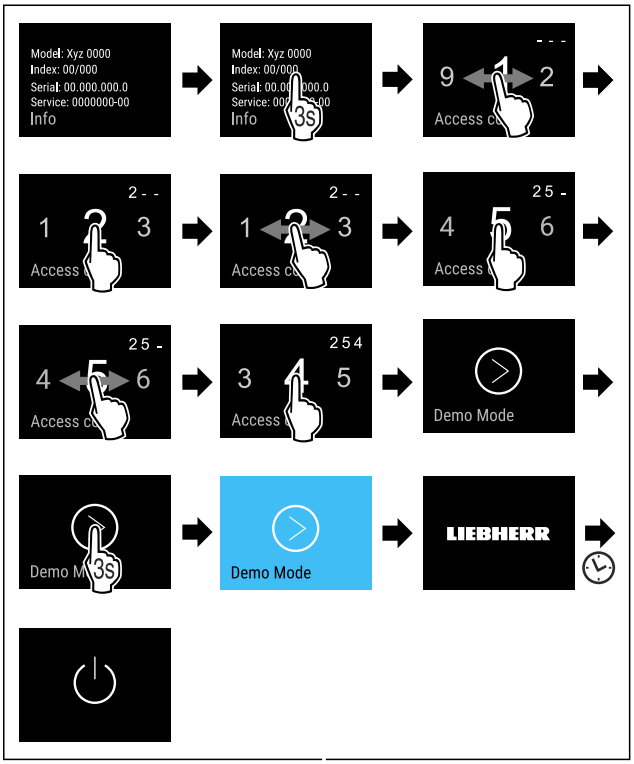

Fig. 90

▶ Carry out action steps according to the illustration.
▷ Demo mode is activated.
▷ Appliance is switched off.
▶ Switch on the appliance. (see 4.1 Switching on appliance (first use))
▷ “DEMO” appears in the status display.

Deactivating demo mode

Fig. 91

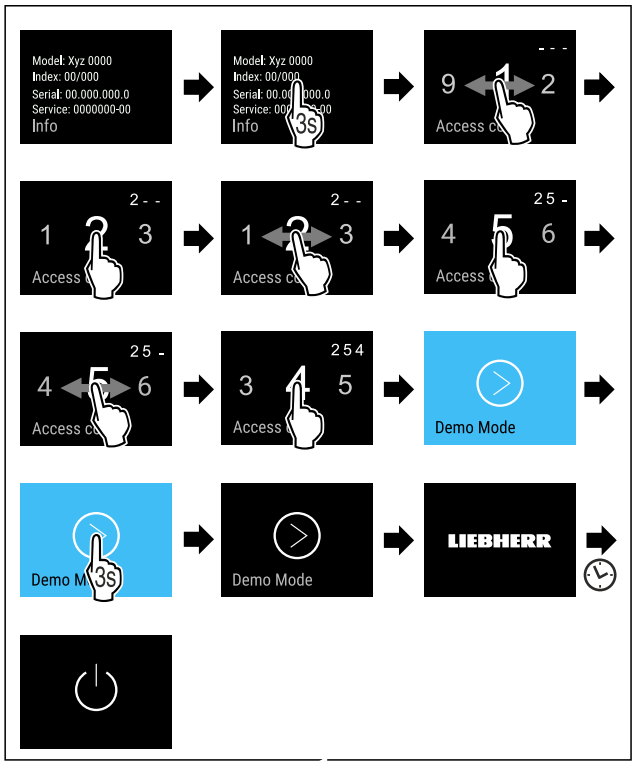

Fig. 92

▶ Carry out action steps according to the illustration.
▷ Demo mode is deactivated.
▷ Appliance is switched off.
▶ Switch on the appliance. (see 4.1 Switching on appliance (first use))
▷ Appliance is reset to factory settings.

Resetting to factory settings

Use this function to reset all settings to factory settings. All settings you have made so far are reset to their original settings.

Performing a reset

Fig. 93

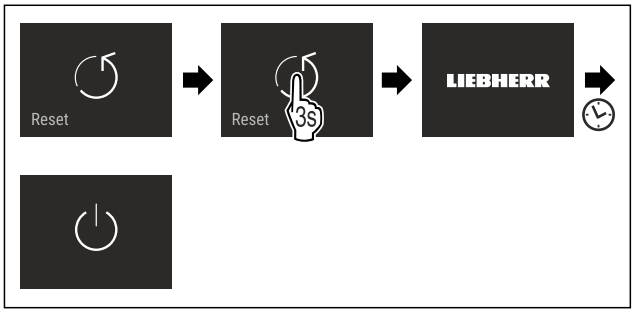

Fig. 94

▶ Carry out action steps according to the illustration.
▷ Appliance is reset.
▷ Appliance is switched off.
▶ Restart the appliance. (see 4.1 Switching on appliance (first use))

7.3 Messages

There are two categories of messages:

Category	Meaning
Warning	Warnings are displayed if there is a door alarm or a malfunction. You can easily end warnings yourself. For any major malfunction, you must contact Customer Service. (see 10.4 Customer Service)
Reminder	Reminders remind you of general processes. You can perform these processes and end the message doing so.

7.3.1 Overview of warnings

The appliance's behavior in the event of a warning:

- Warning appears in the display in red.
- Alarm sounds in increasing volume.
- For some warnings the interior lighting pulses.

Message	Cause	Ending the message
Door alarm	The message appears if the door is open for too long.	Carry out action steps (see Door alarm) .
Power failure alarm	The message appears if the freezing temperature increases due to a power outage.	

Message	Cause	Ending the message
Temperature alarm	The message appears if the freezing temperature does not correspond to the set temperature.	Carry out action steps (see Temperature alarm) .
Error	This message appears if there is an appliance error. An appliance module indicates an error.	Carry out action steps (see Error) .
WLAN error	This message appears if the appliance could not be connected to WLAN. (see Establishing the WiFi connection for the first time) This message only appears the first time the appliance is set up.	Carry out action steps (see WLAN error) .

7.3.2 Ending warnings

Door alarm

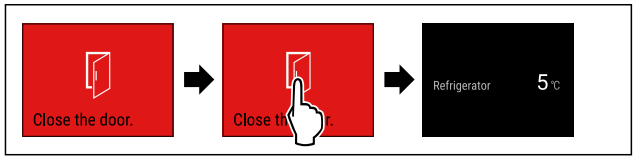

Fig. 95 Example illustration

▶ Carry out action steps according to the illustration.

-or-

▶ Close the door.

▷ Display skips to status display.

You can set how long to door may remain open until the door alarm sounds. (see Setting the door alarm)

Power failure alarm

Once the power failure has ended, the appliance automatically cools to the target temperature set earlier without you having to confirm the message. But you must confirm it in order for the message to disappear on the display.

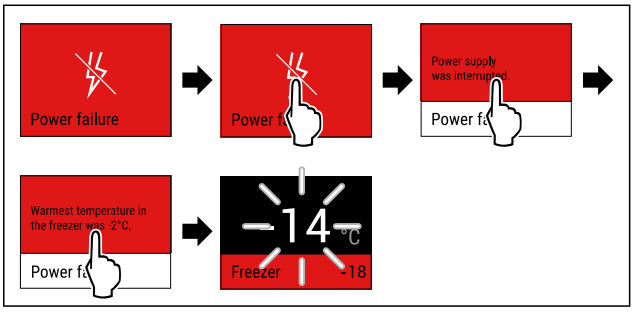

Fig. 96 Example illustration

▶ Briefly touch the display.

▷ Display shows information about the warning.

▶ Briefly touch the display.

▷ The warmest freezing temperature is displayed.

▷ If the freezing temperature was below -9 °C (16 °F): Food can still be eaten.
If the freezing temperature exceeded -9 °C (16 °F):

▶ Check the food.

▶ Briefly touch the display.

▷ Display skips to status display: The current temperature and target temperature are displayed.

Temperature alarm

Causes for the temperature differences may be:

- You have put in warm, fresh food.
- Too much warm room air has flowed in during the rearrangement and removal of food.
- The power has been out for a longer period of time.
- The appliance is defective.

▶ Remedy the cause.

▷ The appliance cools to the target temperature set earlier:

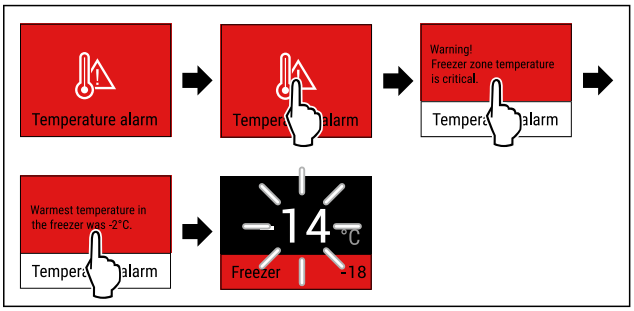

Fig. 97 Example illustration

▶ Briefly touch the display.

▷ Display shows information about the warning.

▶ Briefly touch the display.

▷ The warmest freezing temperature is displayed.

▷ If the freezing temperature was below -9 °C (16 °F): Food can still be eaten.
If the freezing temperature exceeded -9 °C (16 °F):

▶ Check the food.

▶ Briefly touch the display.

▷ Display skips to status display: The current temperature and target temperature are displayed.

Error

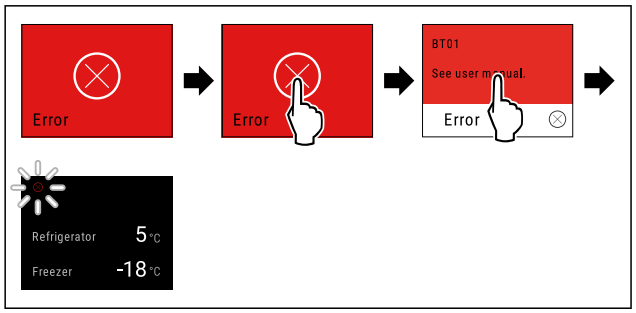

Fig. 98 Example illustration

▶ Briefly touch the display.
▷ Error code is displayed.
▶ Make a note of the error code.
▶ Briefly touch the display.
▷ Display skips to status display.
▶ Contact Customer Service. (see 10.4 Customer Service)

WLAN error

▶ Check the WLAN connection.
▶ Connect the appliance to the WLAN again. (see WiFi)

7.3.3 Overview of reminders

The appliance's behavior in the event of a reminders:

- Reminder appears in the display in yellow.
- Alarm tone sounds.
- For some reminders the interior lighting pulses.

You can deactivate the following reminders (see Deactivating reminder) :

- Replace FreshAir activated charcoal filter

Message	Cause	Ending the message
FreshAir filter **Replace FreshAir activated charcoal filter**	This message appears if you have to replace the FreshAir activated charcoal filter.	Carry out action steps (see Replace FreshAir activated charcoal filter) .

7.3.4 Ending reminders

Replace FreshAir activated charcoal filter

Liebherr recommends: Replace the FreshAir activated charcoal filter every 6 months.

Note
FreshAir activated charcoal filters can be purchased from the Liebherr Service Center. The address for your respective country can be found on the back of the instructions.

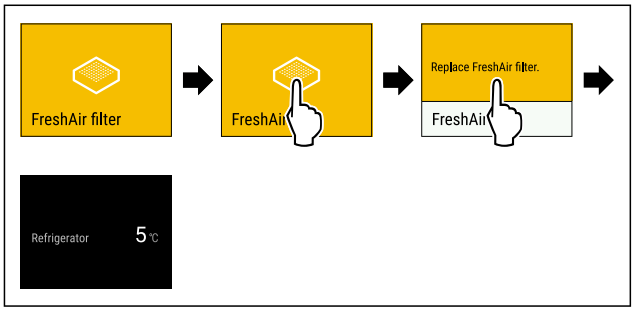

Fig. 99 Example illustration

▶ Briefly touch the display.
▷ Display shows information about the reminder.
▶ Briefly touch the display.
▶ Replace activated charcoal filter. (see 9.1 FreshAir carbon filter)
▷ The activated charcoal filter ensures optimum air quality in the refrigerator.
▷ Reminder appears again after 6 months.

If you no longer want to keep this reminder, you can deactivate the reminder. (see Deactivating reminder)

8 Equipment

8.1 Door racks

Door racks are suitable for storing beverages and food. You can move door racks for use as individually needed and disassemble them for cleaning. However, Liebherr recommends using the door racks in the position they are in when delivered from the plant.

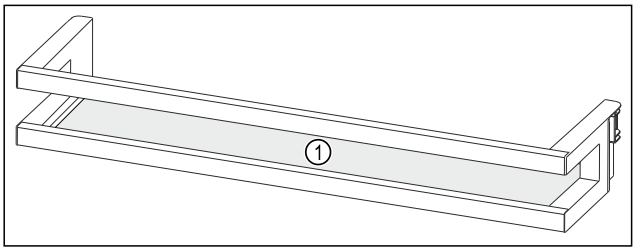

Fig. 100 Example illustration of the door racks
(1) Shelf

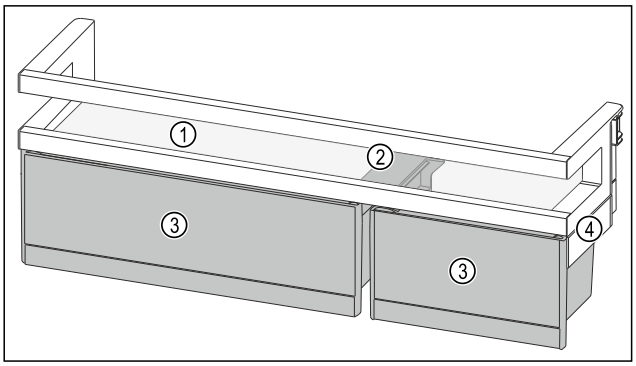

Fig. 101 Example illustration of door racks with VarioBoxes
(1) Shelf **(3)** VarioBoxes

(2) Retaining part for VarioBoxes

(4) Side section

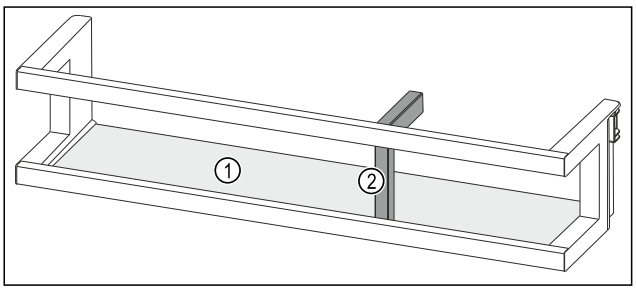

Fig. 102 Example illustration of the door racks with bottle holder

(1) Shelf

(2) Bottle holder

The following table shows examples of what you can store in each door rack. Here, make sure that you do not exceed the maximum loading weight for the door.

Door racks	Food
Door racks (see Fig. 100)	Butter, cheese, canned food, tubes
Door racks with bottle holder (see Fig. 102)	Bottles Use the movable bottle holder to secure the bottles in the door rack.
Door racks with Vario-Boxes (see Fig. 101)	small food items

8.1.1 Removing the VarioBoxes

You can use either one or both VarioBoxes. If you want to place especially high bottles in the door rack below the door rack with VarioBoxes, you can remove one or both VarioBoxes.

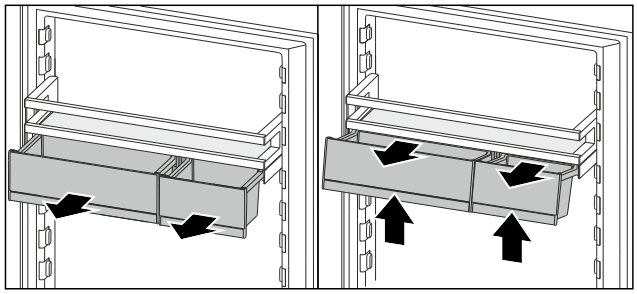

Fig. 103

▶ Pull out the VarioBoxes as far as they go.
▶ Lift VarioBoxes at the front.
▶ Take the VarioBoxes out to the front.

8.1.2 Removing the door rack

Make sure that the following requirements are fulfilled:

❑ VarioBoxes are removed. (see 8.1.1 Removing the VarioBoxes)

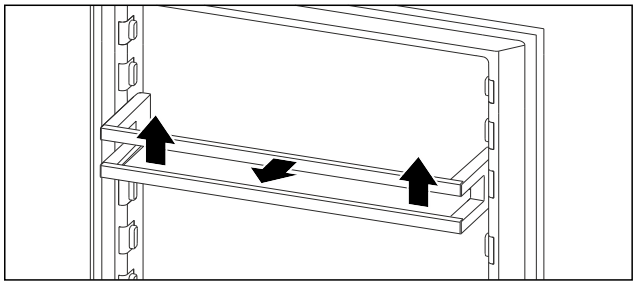

Fig. 104 Example illustration

▶ Move the door rack up.
▶ Move the door rack to the front.

8.1.3 Inserting the door rack

Make sure that the following requirements are fulfilled:

❑ VarioBoxes are removed. (see 8.1.1 Removing the VarioBoxes)

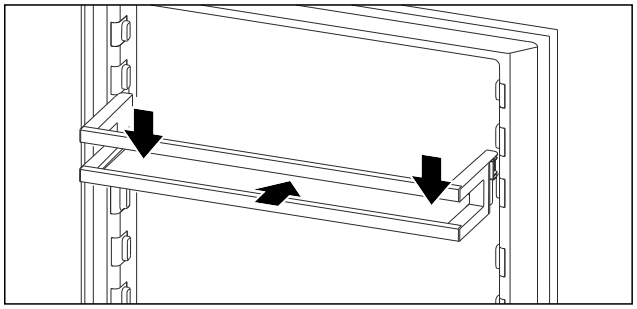

Fig. 105 Example illustration

▶ Insert the door rack.
▶ Press the door rack down.

8.1.4 Inserting the VarioBoxes

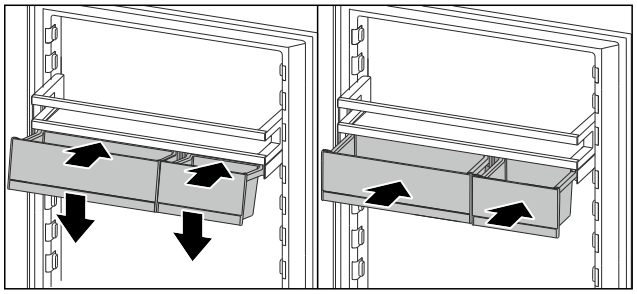

Fig. 106

▶ Place the VarioBoxes at an angle on the ridge of the door rack.
▶ Lower the VarioBoxes.
▶ Push in the VarioBoxes.

8.1.5 Repositioning the VarioBoxes

Make sure that the following requirements are fulfilled:

❑ VarioBoxes are removed. (see 8.1.1 Removing the VarioBoxes)
❑ Door rack is removed. (see 8.1.2 Removing the door rack)

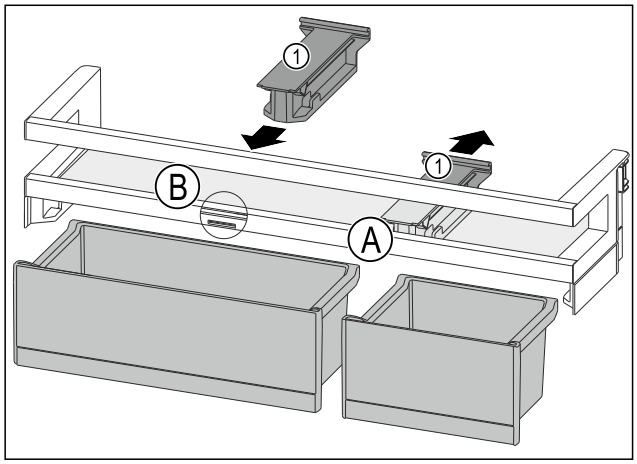

Fig. 107

▶ Pull off the retaining part *Fig. 107 (1)* in position *Fig. 107 (A)* downward.
▶ Insert the retaining part *Fig. 107 (1)* in position *Fig. 107 (B)*.
▶ Insert the door rack. (see 8.1.3 Inserting the door rack)

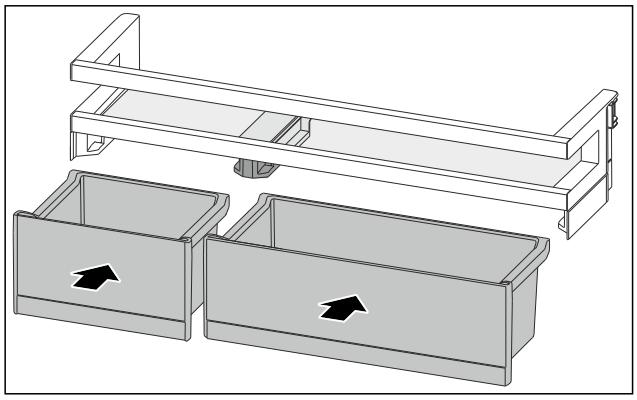

Fig. 108

▶ Insert the VarioBoxes opposite order. (see Fig. 108)

8.1.6 Disassembling the door rack

You can disassemble some of the door racks if you want to clean the door rack or if you'd like to insert or remove replacement parts.

Disassembling the door rack

Make sure that the following requirements are fulfilled:

❑ Door rack is removed. (see 8.1.2 Removing the door rack)

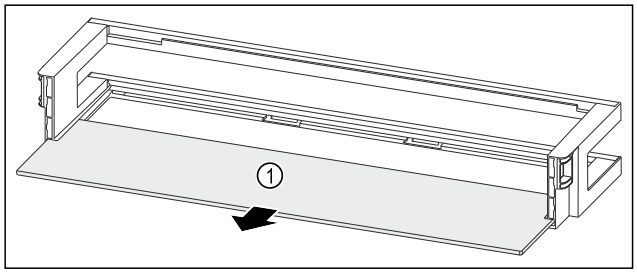

Fig. 109 Door racks with shelf

▶ Remove the shelf *Fig. 109 (1)*.

Disassembling the shelf with VarioBoxes

Make sure that the following requirements are fulfilled:

❑ Door rack is removed. (see 8.1.2 Removing the door rack)

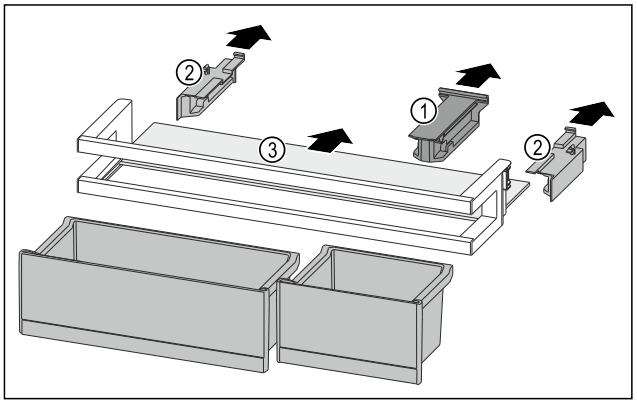

Fig. 110

▶ Remove theVarioBoxes. (see 8.1.1 Removing the VarioBoxes)
▶ Pull off the retaining part *Fig. 110 (1)*.
▶ Pull off the side part *Fig. 110 (2)*.
▶ Remove the shelf *Fig. 110 (3)*.

Disassembling the door racks with bottle holder

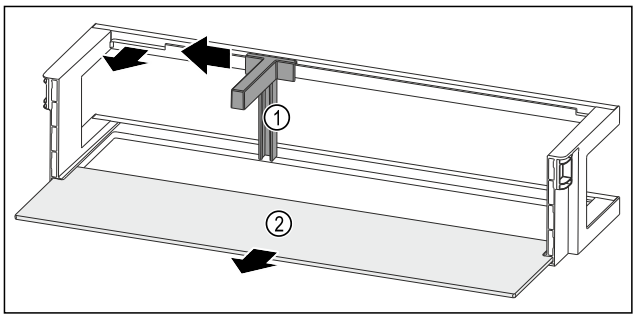

Fig. 111 Door racks with bottle holder and shelf

▶ Push the bottle holder *Fig. 111 (1)* to the side up to the recess.
▶ Remove the bottle holder *Fig. 111 (1)*.
▶ Remove the shelf *Fig. 111 (2)*.

8.1.7 Assembling the door rack

Assembling the door rack

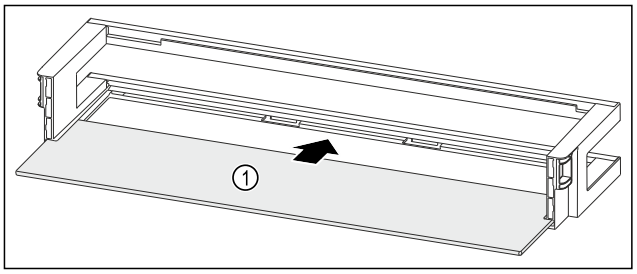

Fig. 112 Door racks with shelf

▶ Push the shelf *Fig. 112 (1)* into the side cutouts.

Assembling the door rack with VarioBoxes

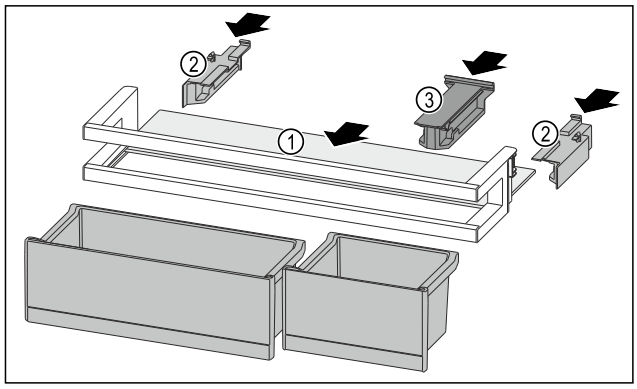

Fig. 113

▶ Push the shelf *Fig. 113 (1)* into the side cutouts.
▶ Insert the side parts *Fig. 113 (2)*.
▶ Insert the retaining part *Fig. 113 (3)*.
▶ Insert the VarioBoxes. (see 8.1.4 Inserting the VarioBoxes)

Assembling the door racks with bottle holder

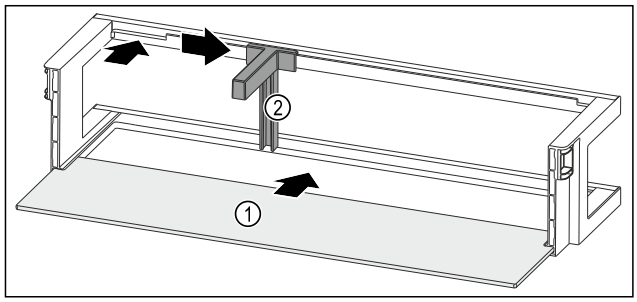

Fig. 114 Door racks with shelf

▶ Push the shelf *Fig. 114 (1)* into the side cutouts.
▶ Insert the bottle holder *Fig. 114 (2)* into the recess.
▶ Push the bottle holder *Fig. 114 (2)* to the side into the desired position.

8.2 Shelves

8.2.1 Moving/removing shelves

CAUTION
Broken shelves!
Danger of cuts.
▶ Only remove storage shelves when there is nothing on them

Extension stops secure the shelves against being accidentally pulled out

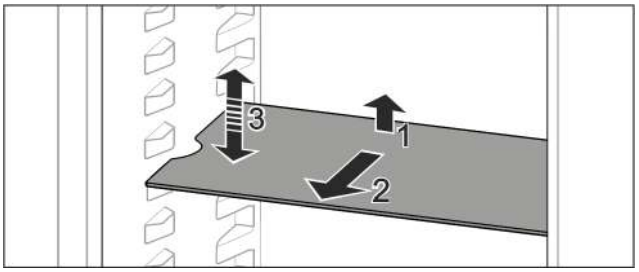

Fig. 115

▶ Lift the shelf and pull to the front.
▷ Side recess to shelf position.
▶ Reposition the shelf: Lift up or lower to the desired height and insert.

-or-

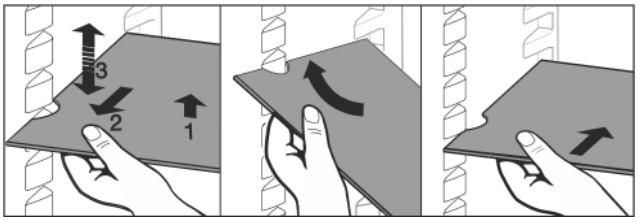

Fig. 116

▶ Take out the shelf completely: Pull out to the front.

▶ Easier removal: Set the shelf at an angle.
▶ Reinsert the shelf: Push it in to its stop limit.
▷ Pull-out stoppers are pointing down.
▷ Pull-out stoppers are behind the front shelf.

You can also remove the shelf above the EasyFresh compartments.

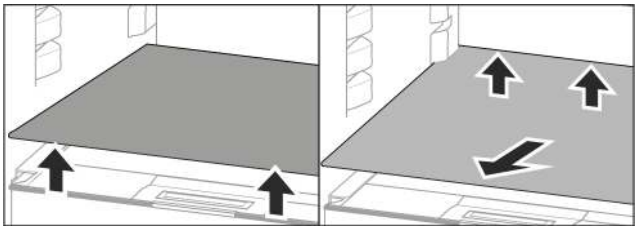

Fig. 117

To remove shelf
▶ Lift the shelf at the front and back.
▶ Remove from the front.

Do not place any goods on the drawer cover below!

Slide the shelf in:
▶ Place the shelf at an angle, with the back tilted downwards.
▷ Pull-out stoppers are pointing down.
▶ Slide the shelf into place.

8.3 Split shelf

8.3.1 Using the split shelf

CAUTION
Broken shelves!
Danger of cuts.
▶ Only remove storage shelves when there is nothing on them

Extension stops secure the shelves against being accidentally pulled out

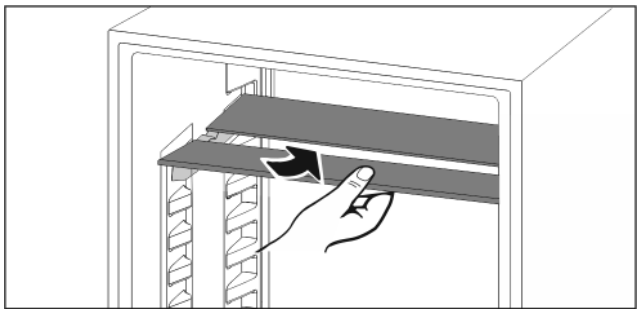

Fig. 118

▶ Push the split shelf underneath as in the illustration

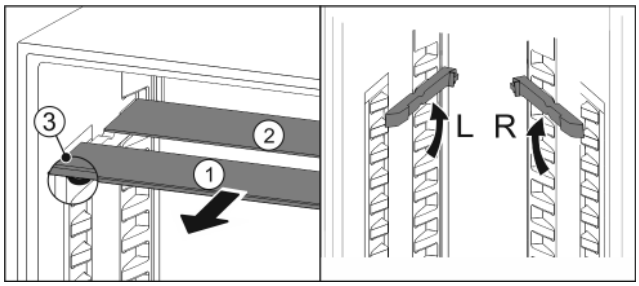

Fig. 119

Adjusting heights:
▶ Pull the glass panels out *Fig. 119 (1)* from the front, one at a time.
▶ Pull the support rails out of their retainers and snap into place at the height you want them.
▶ Slide in the glass panels one at a time.
▷ Flat pull-out stoppers at the front, right behind the support rail.
▷ Taller pull-out stoppers at the back.

Using both shelves:
▶ Hold the bottom glass panel with one hand and pull it to the front.
▷ The glass panel *Fig. 119 (1)* with the trim strip is at the front.
▷ The stops *Fig. 119 (3)* point downward.

8.4 VarioSafe

The VarioSafe offers space in the refrigerator compartment for small groceries, packages, tubes and jars, for example.

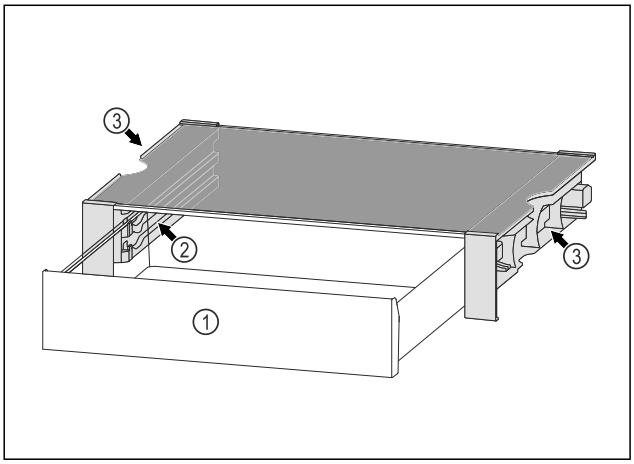

Fig. 120

(1) VarioSafe drawer
(2) Side panels with ribs for VarioSafe drawer
(3) Recesses on the left and right side panel

8.4.1 Inserting the VarioSafe

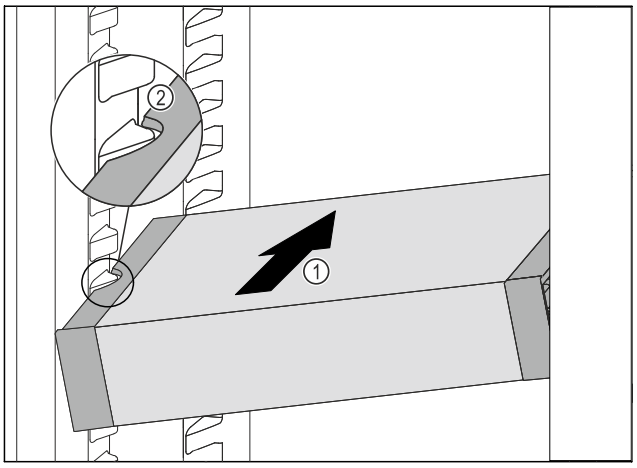

Fig. 121

▶ Insert the VarioSafe into the refrigerator compartment at an angle *Fig. 121 (1)* until the recesses in the side *Fig. 121 (2)* of the VarioSafe are at the level of the support rib in the refrigerator compartment.

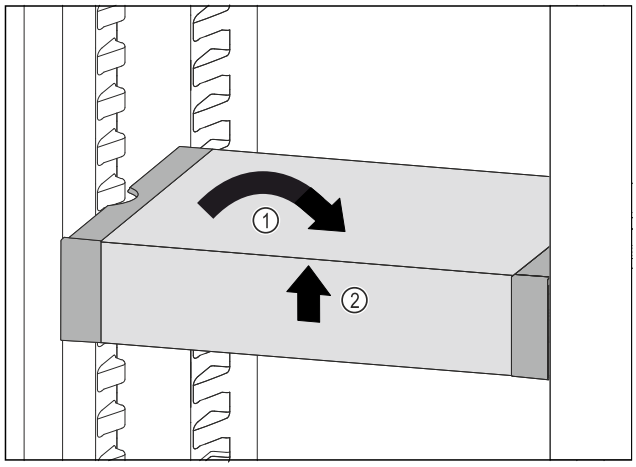

Fig. 122

▶ Set VarioSafe straight. *Fig. 122 (1)*
▶ Lift VarioSafe at the front. *Fig. 122 (2)*

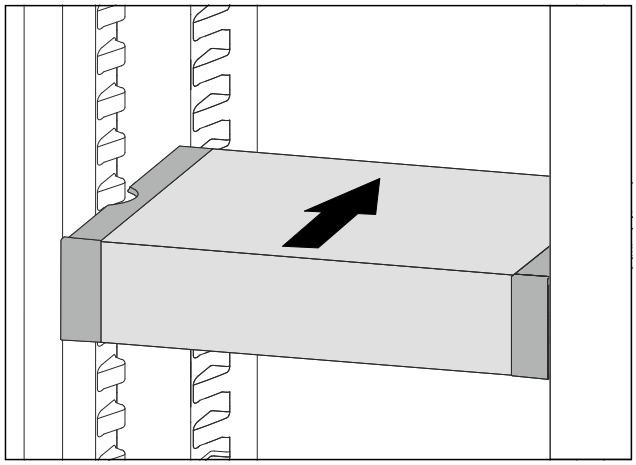

Fig. 123

▶ Lift VarioSafe up toward the front.
▶ Push VarioSafe in to the rear.
▶ Lower VarioSafe.
▷ VarioSafe audibly engages.
▷ VarioSafe is inserted.

8.4.2 Repositioning the VarioSafe

You can move the VarioSafe as a whole in the refrigerator compartment.

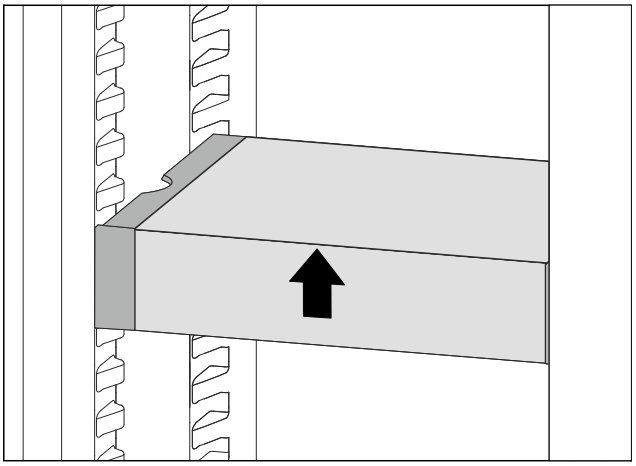

Fig. 124

▶ Lift VarioSafe at the front.

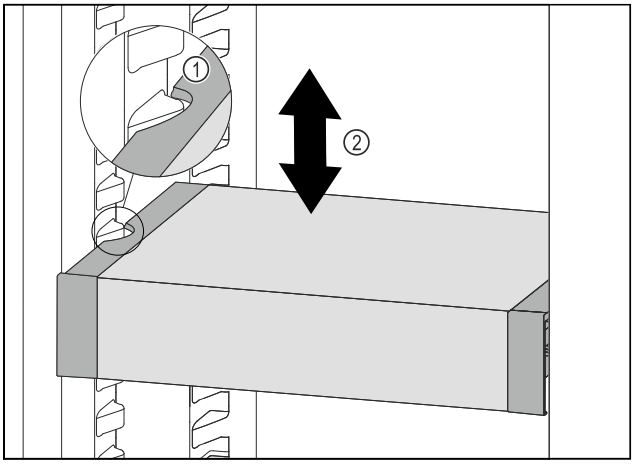

Fig. 125

▶ Pull VarioSafe forwards until the recesses in the side of the VarioSafe are at the level of the support rib in the refrigerator compartment. *Fig. 125 (1)*
▶ Move VarioSafe up or down in the refrigerator compartment until the desired height is reached. *Fig. 125 (2)*

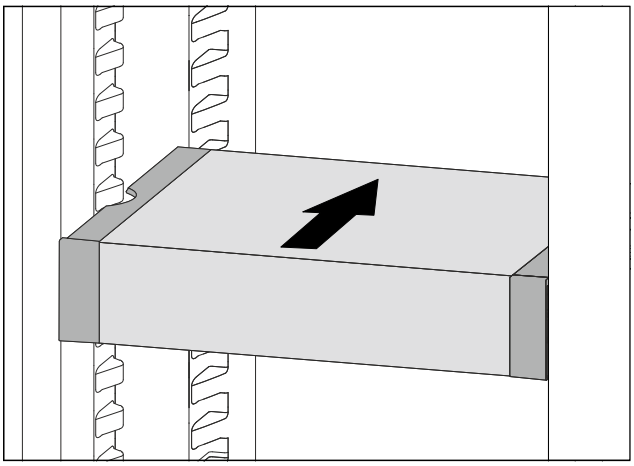

Fig. 126

▶ Lift VarioSafe at the front.
▶ Push VarioSafe in to the rear.

▷ VarioSafe audibly engages.
▷ VarioSafe is offset in height.

8.4.3 Moving the VarioSafe drawer

You can use the VarioSafe drawer at two different heights. If you would like to store taller foodstuffs in the VarioSafe drawer, slide the VarioSafe drawer in on the bottom rib. If you would like to store smaller foodstuffs in the VarioSafe drawer, slide the VarioSafe drawer in on the top rib.

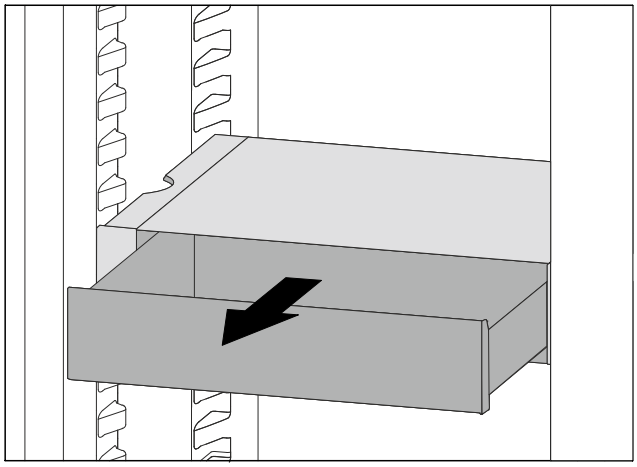

Fig. 127

▶ Pull out the VarioSafe drawer as far as it will go.
▶ Lift the VarioSafe drawer up at the front.
▶ Remove the VarioSafe drawer to the front.

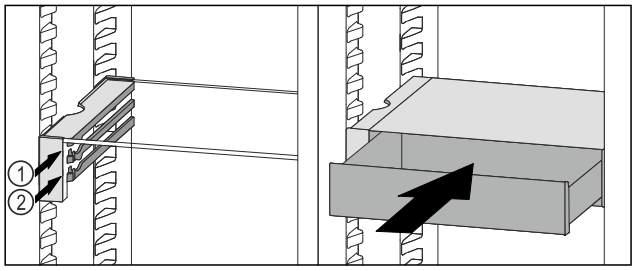

Fig. 128

▶ Lift the VarioSafe drawer up at the front.
▶ Place the VarioSafe drawer behind the stoppers on desired rib *Fig. 128 (1)* or *Fig. 128 (2)*.
▷ VarioSafe drawer is offset in height.

8.4.4 Removing the VarioSafe

You can remove the VarioSafe as a whole.

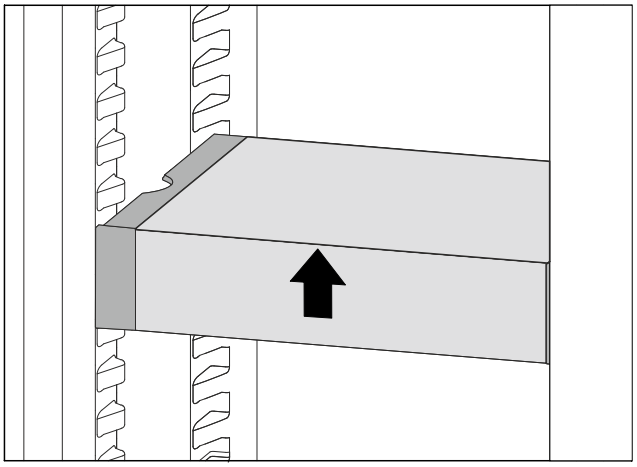

Fig. 129

▶ Lift VarioSafe at the front.

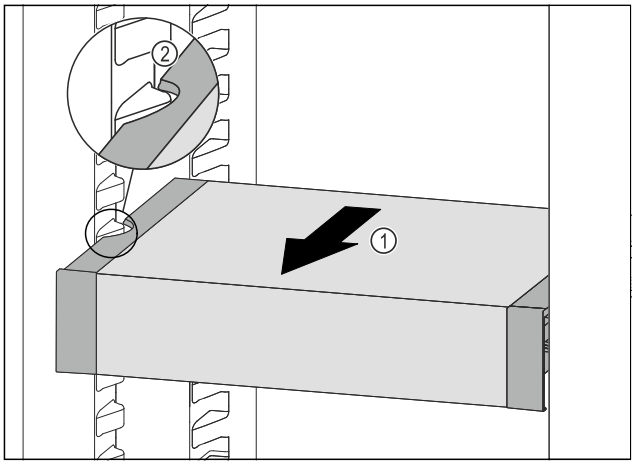

Fig. 130

▶ Pull VarioSafe forward *Fig. 130 (1)* until the recesses in the side of the VarioSafe are at the level of the support rib in the refrigerator compartment. *Fig. 130 (2)*

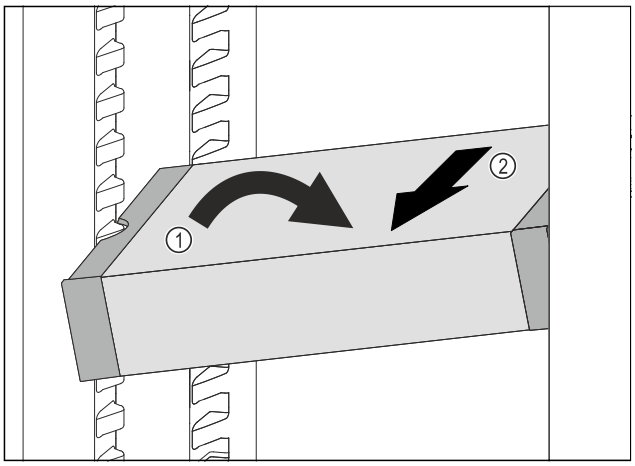

Fig. 131

▶ Set VarioSafe in refrigerator compartment at an angle. *Fig. 131 (1)*
▶ Take VarioSafe out to the front. *Fig. 131 (2)*
▷ VarioSafe is removed.

*** Depending on model and options**

8.4.5 Disassembling the VarioSafe

You can disassemble the VarioSafe into its individual parts if you want to clean the VarioSafe or if you need to install or remove parts.

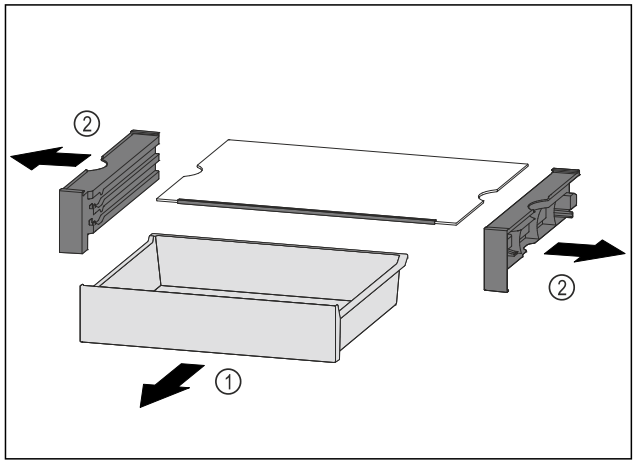

Fig. 132

▶ Remove VarioSafe as a whole. (see 8.4.4 Removing the VarioSafe)

▶ Disassemble VarioSafe according to the illustration.

8.5 Drawers

You can remove the drawers for cleaning.

You can remove the drawers to use VarioSpace.*

The way to remove/insert the drawers varies depending on the pull-out system. Your appliance can contain a variety of pull-out systems.

Note

Insufficient ventilation results in an increase in energy consumption and reduction of the refrigerating performance.

▶ Leave the bottom drawer in appliance!

▶ Never obstruct the vents on the interior rear wall!

8.5.1 Drawer on appliance base or glass shelf*

The drawer runs directly on the appliance base or on a glass shelf. There are no rails.

When you remove the drawers, you can use the glass shelves below them as storage shelves.

Removing drawer

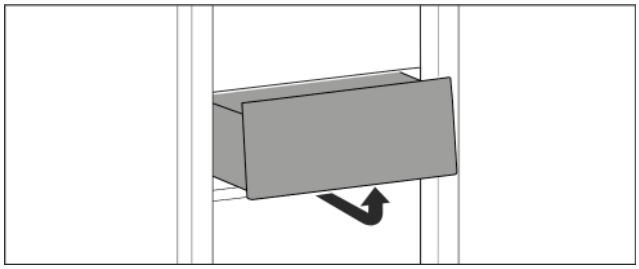

Fig. 133

▶ Remove drawer as shown in the diagram.

Inserting drawer

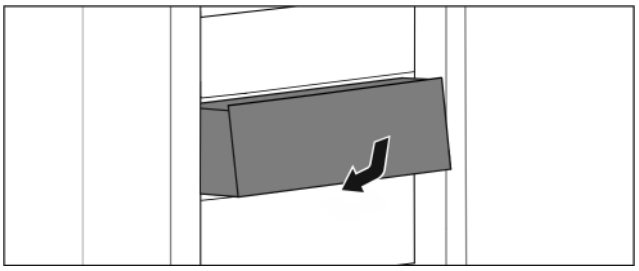

Fig. 134

▶ Insert drawer as shown in the diagram.

8.5.2 Drawer on telescopic rails

The drawer runs on full-extension rails (telescopic rails). There are full-extension telescopic rails and telescopic rails with partial pull-out. Drawers which are full extension can be pulled out fully from the appliance. Drawers with partial pull-out cannot be pulled out fully from the appliance. The system in your appliance depends on the type of appliance.

Partial pull-out fridge compartment

Removing drawer

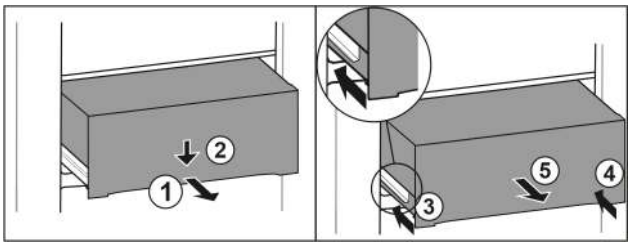

Fig. 135

▶ Pull out the drawer halfway. *Fig. 135 (1)*

▶ Press down the drawer on the front. *Fig. 135 (2)*

▶ Push in the left rail approximately 2 cm (13/16 in). *Fig. 135 (3)*

▶ Push in the right rail approximately 2 cm (13/16 in). *Fig. 135 (4)*

▶ Remove drawer to the front. *Fig. 135 (5)*

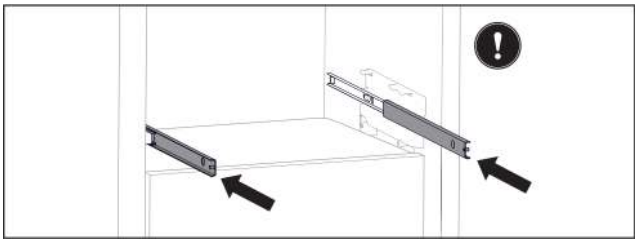

Fig. 136

If the rails are not yet fully pushed in after removing the drawer:

▶ Push the rails in completely.

Inserting drawer

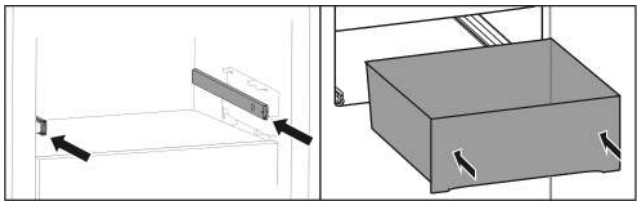

Fig. 137

▶ Slide rails in.
▶ Place drawer on rails.
▶ Slide in drawer to the back.

Partial pull-out freezing compartment*

Note
If the magnet on the top drawer in the freezing compartment is damaged or removed, the door sensor will malfunction.
▶ Do not damage or remove the magnet.

Removing drawer

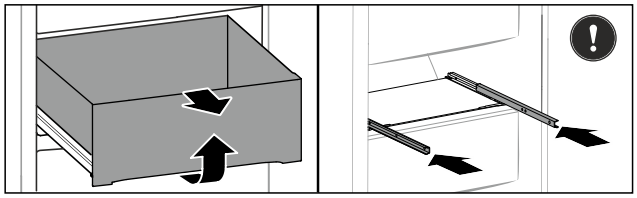

Fig. 138

If the drawer is in the top freezer:
▶ Pull out drawer as far as it will go.
▶ Lift up the front of the drawer.
▶ Remove the drawer from the front.
▶ Slide rails in.
-or-

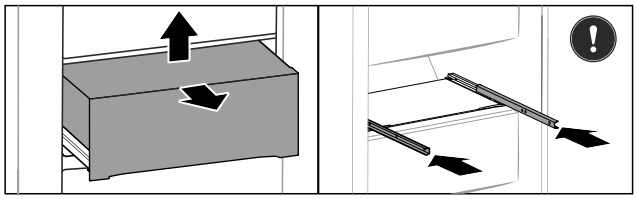

Fig. 139

If the drawer is in the middle of the freezing compartment:
▶ Pull out drawer halfway.
▶ Lift the back of the drawer from the bottom.
▶ Remove the drawer from the front.
▶ Slide rails in.

Inserting drawer

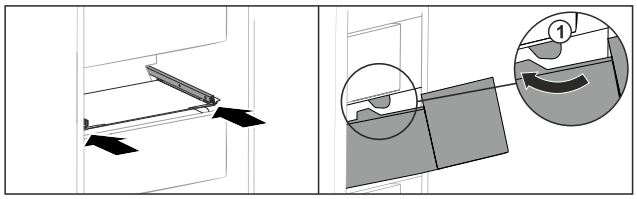

Fig. 140

▶ Slide rails in.
▶ Guide drawer around the stoppers *Fig. 140 (1)*.
▶ Place drawer on rails.
▶ Slide in drawer to the back.

8.6 Lid for EasyFresh-safe

The lid ensures constant levels of humidity.

The lid is located directly on the drawer and can be covered by shelves or additional drawers.

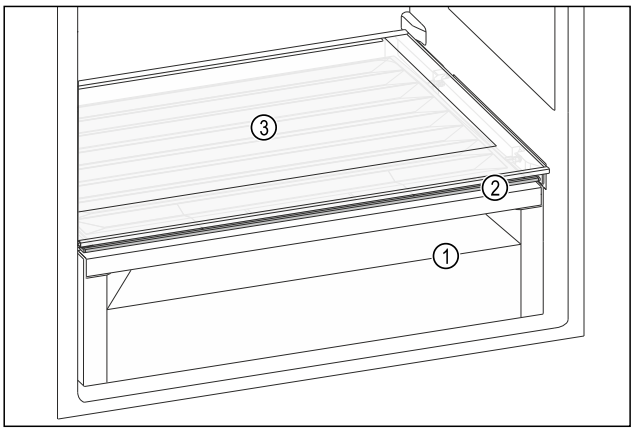

Fig. 141 Example illustration of the lid for EasyFresh-safe

(1) EasyFresh-safe
(2) Lid for EasyFresh-safe
(3) Shelf

8.6.1 Reducing humidity in the drawer

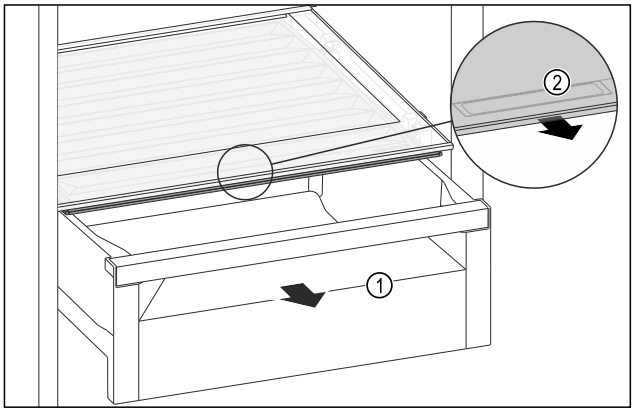

Fig. 142

▶ Pull out the drawer *Fig. 142 (1)*.
▶ Grip the handle recess *Fig. 142 (2)* on the lid while pulling the lid forward at the same time.
▷ When the drawer is closed, there is a small gap between the lid and the drawer.

*** Depending on model and options**

8.6.2 Increasing humidity in the drawer

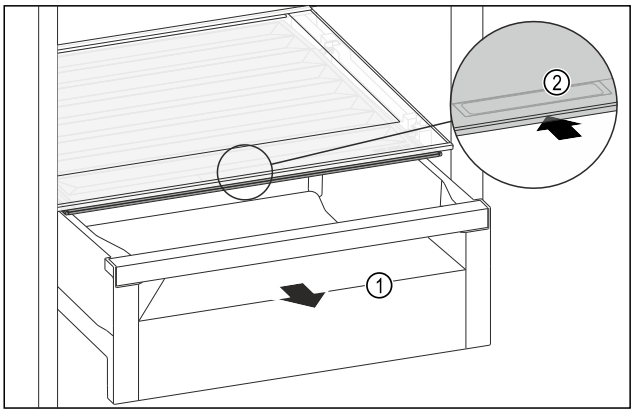

Fig. 143

▶ Pull out the drawer *Fig. 143 (1)*.
▶ Grip the handle recess *Fig. 143 (2)* on the lid while pulling the lid backward at the same time.
▷ When the drawer is closed, the lid closes tightly with the drawer.

8.7 Glass shelves

You can remove the glass shelf under the drawers for cleaning.

You can remove the glass shelf under the drawers to use VarioSpace.*

8.7.1 Removing / inserting the glass shelf

Make sure that the following requirements are fulfilled:

❑ Glass shelf under the drawer: Drawer has been removed. (see 8.5 Drawers)

Removing glass shelf

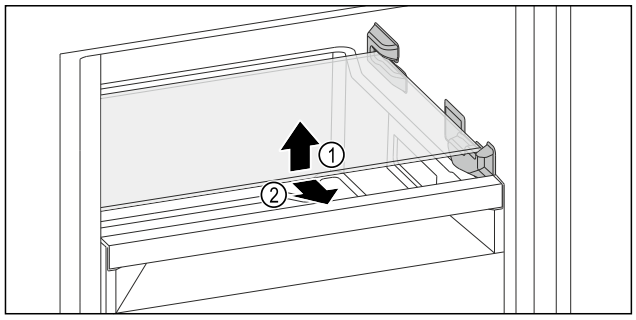

*Fig. 144 Example illustration of the glass shelf**

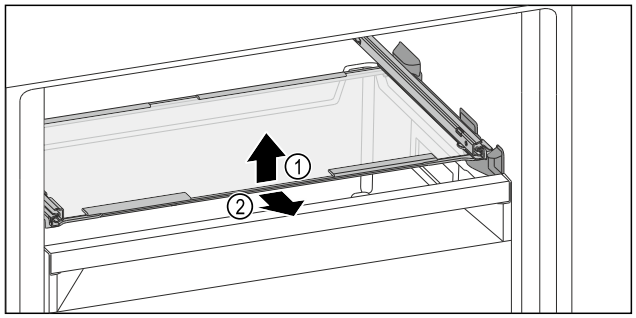

*Fig. 145 Example illustration of the glass shelf**

▶ Lift the front of the glass shelf.
▶ Remove the glass shelf from the front.

Inserting the glass shelf

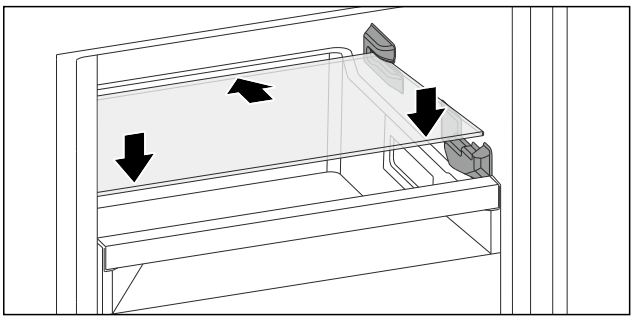

*Fig. 146 Example illustration of the glass shelf**

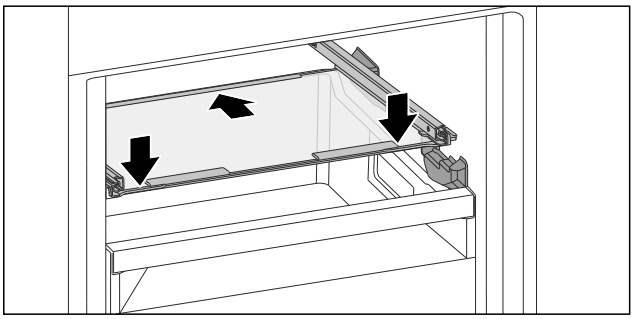

*Fig. 147 Example illustration of the glass shelf**

▶ Set down the glass shelf diagonally behind the stoppers.
▶ Lower glass shelf.
▶ Slide in glass shelf to the back.

8.8 EasyTwist-Ice

With the EasyTwist-Ice you can make enough ice cubes for the whole household. The EasyTwist-Ice is supplied with water via a water tank.

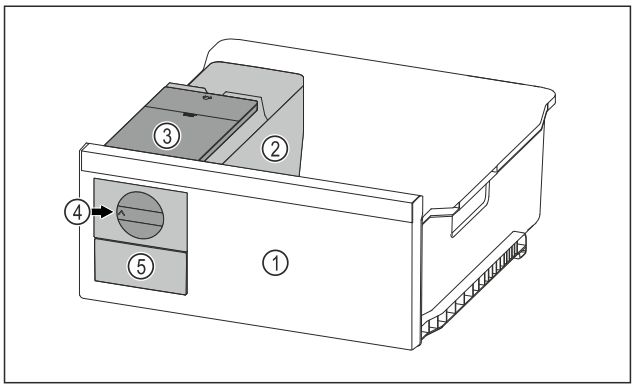

Fig. 148 Example illustration

(1) Freezer drawer with EasyTwist-Ice
(2) Body with ice cube tray
(3) Water tank
(4) Rotary knob
(5) Ice cube drawer

Note
Do not change the position of the freezer drawer with the EasyTwist-Ice in the appliance.

8.8.1 Making ice cubes

The amount of ice cubes you can make in a given period of time with the EasyTwist-Ice depends on the freezer temperature of the appliance. The lower the temperature in the appliance, the more ice cubes you can make.

Maximum number of ice cubes in the ice cube tray:	20 ice cubes
Maximum capacity of the ice cube drawer:	40 ice cubes (equivalent to two ice cube batches)
More information about the time needed for ice cube production:	(see 10.1 Technical specifications)

Make sure that the following requirements are fulfilled:

- ❑ Components of the EasyTwist-Ice have been cleaned.

Filling the water tank

WARNING
Risk of poisoning due to contaminated water!
▶ Fill the water tank with potable water only.

NOTICE
Sugary liquids!
Damage to the EasyTwist-Ice.
▶ Fill with cold drinking water only.

Note
Using filtered, decarbonized water ensures the best-tasting drinking water for your ice cubes.
This water quality can be achieved using a table water filter of the kind available in trade retail outlets.
▶ Always fill the water tank only with filtered, decarbonized drinking water.

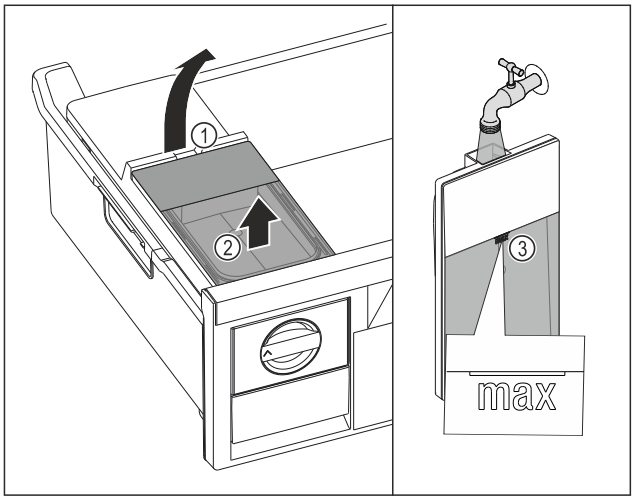

Fig. 149

▶ Pull out freezer drawer as far as it will go.
▶ Lift the water tank at the recess *Fig. 149 (1)*.
▶ Remove the water tank by lifting it upward. *Fig. 149 (2)*
▶ Fill the water tank with drinking water up to the mark *Fig. 149 (3)*.

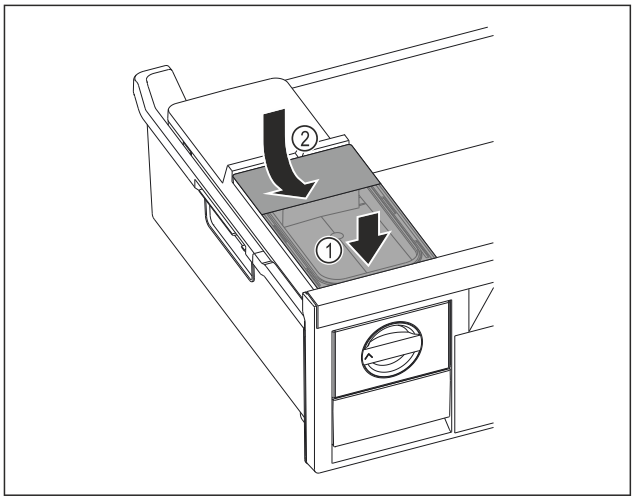

Fig. 150

▶ Position the water tank at the front. *Fig. 150 (1)*
▶ Lower the water tank at the rear. *Fig. 150 (2)*
▶ Slide in the freezer drawer.

Releasing the ice cubes

Make sure that the following requirements are fulfilled:

- ❑ The required time for the production of ice cubes has been observed. (see 10.1 Technical specifications)
- ❑ Freezer drawer is fully inserted.
- ❑ Ice cube drawer is fully inserted.

▶ Turn the rotary knob *Fig. 148 (4)* clockwise as far as it will go.
▷ Ice cubes fall from the ice cube tray into the ice cube drawer *Fig. 148 (5)*.
If all the ice cubes do not come out of the ice cube tray:
▶ Turn the rotary knob clockwise several times to the stop.

8.9 VarioSpace*

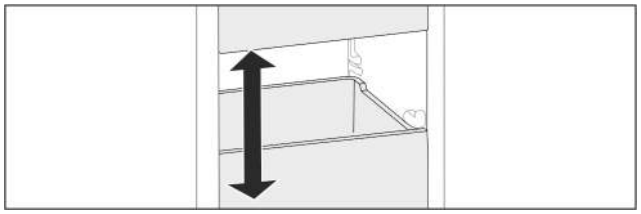

Fig. 151

You can remove drawers and glass panels from your appliance. This provides more room for large food items such as poultry, joints of meat, large game and bulky baked goods. You can then freeze these items whole for later preparation.

▶ Note the load limits on the drawers and glass panels (see 10.1 Technical specifications) .

8.10 Butter dish

8.10.1 Opening/closing the butter dish

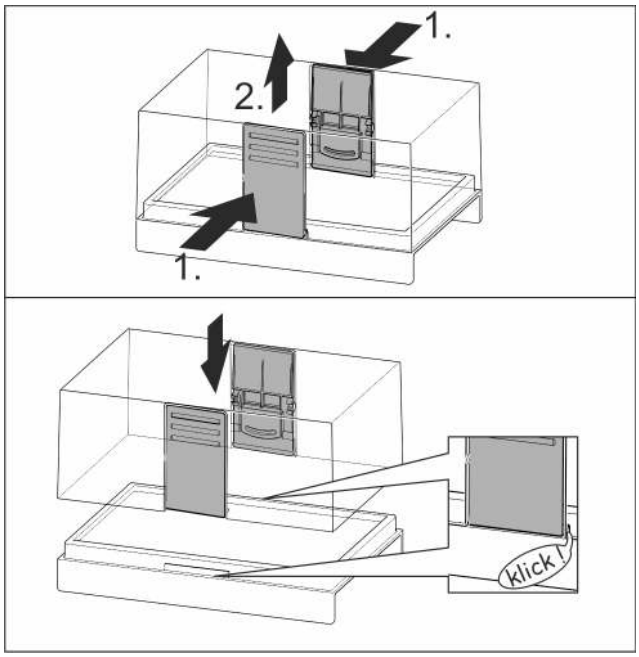

Fig. 152

8.10.2 Dismantling the butter dish

You can disassemble the butter dish for cleaning.

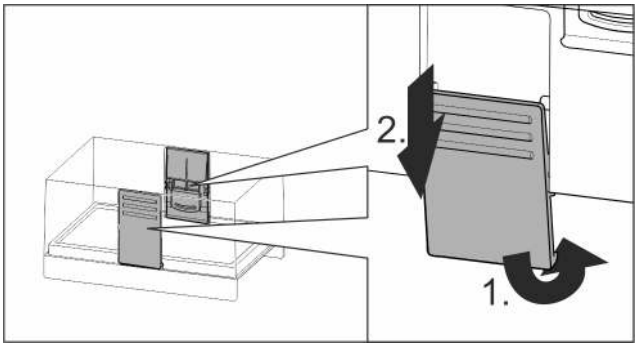

Fig. 153

▶ Disassemble the butter dish.

8.11 Egg rack

You can pull out and turn the egg rack. You can use both sides of the egg rack so you can label specifics like the purchase date.

8.11.1 Using the egg rack

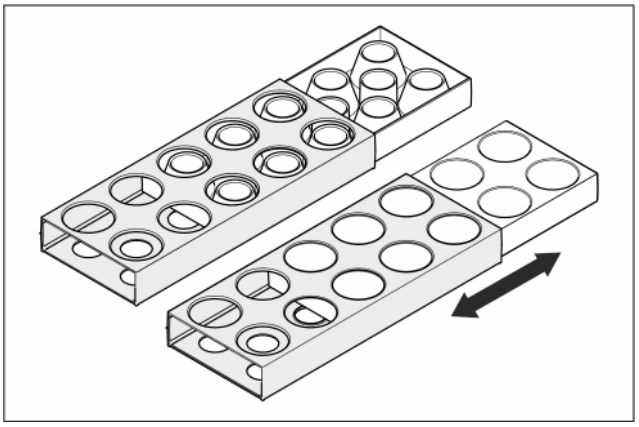

Fig. 154

▶ Top section: store hen eggs.
▶ Bottom section: store quail eggs.

8.12 Bottle rack

8.12.1 Using the bottle rack

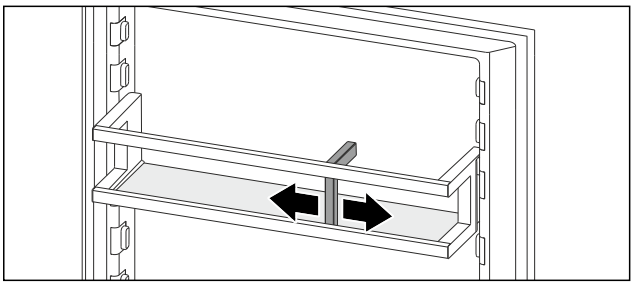

Fig. 155

▶ Slide the bottle rack at the edges.
▷ Stops bottles from tipping over.

9 Maintenance

9.1 FreshAir carbon filter

The FreshAir carbon filter is located in the compartment above the fan.

It guarantees the best air quality.

- ❑ Change the carbon filter every 6 months.
  When the reminder is set, a message on the display prompts you to change it.
- ❑ You can dispose of the carbon filter with the regular household waste.

Note
FreshAir activated charcoal filters can be purchased from the Liebherr Service Center. The address for your respective country can be found on the back of the instructions.

9.1.1 Removing the FreshAir carbon filter

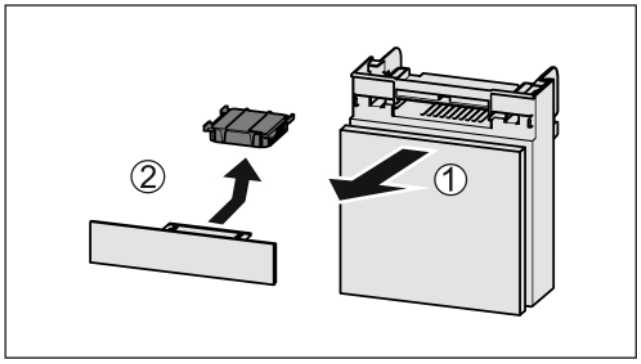

Fig. 156

▶ Pull out the compartment *Fig. 156 (1)*.
▶ Remove the carbon filter *Fig. 156 (2)*.

9.1.2 Inserting the FreshAir carbon filter

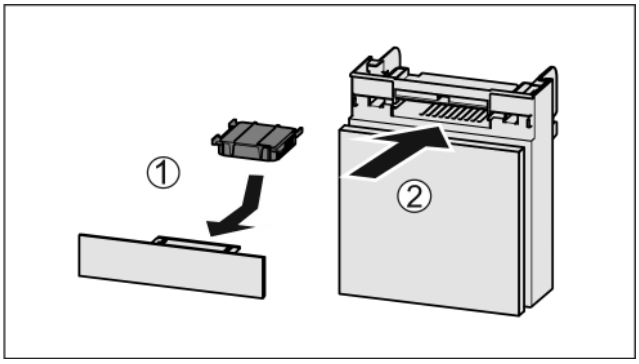

Fig. 157

▶ Insert the carbon filter as shown in the diagram *Fig. 157 (1)*.
▷ The carbon filter clicks into place.
If the carbon filter is pointing downwards:
▶ Push the compartment in *Fig. 157 (2)*.
▷ The carbon filter is now ready for use.

9.2 Disassembling / assembling pull-out systems

9.2.1 Notes on disassembly

You can disassemble some of the pull-out systems for cleaning. Your appliance can contain a variety of pull-out systems.

The following pull-out systems can be disassembled or cannot be disassembled:

Pull-out system	can be disassembled / cannot be disassembled
Drawer on appliance base or glass shelf*	cannot be disassembled*
Partial extension fridge section	cannot be disassembled
Partial-extension in the freezer section*	can be disassembled (see Partial pull-out freezing compartment*) *

9.2.2 Drawer on telescopic rails

Partial pull-out freezing compartment*

Disassembling pull-out system

Make sure that the following requirements are fulfilled:

- ❑ Drawer has been removed.
- ❑ Glass shelf has been removed. (see 8.7 Glass shelves)

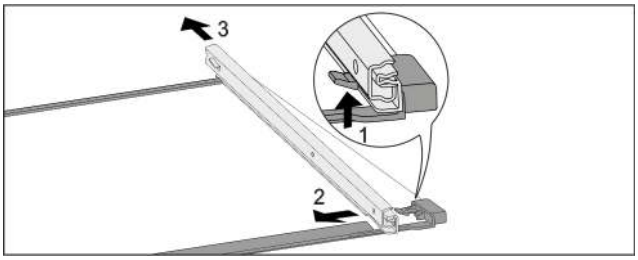

Fig. 158 Glass shelf with rails

▶ Push up front click-in hooks. *Fig. 158 (1)*
▶ Slide pull-out rails to the side *Fig. 158 (2)* and backwards *Fig. 158 (3)*.

Installing pull-out system

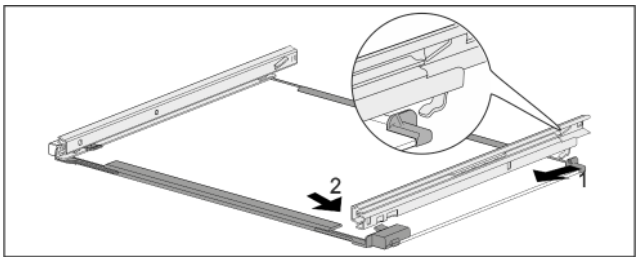

Fig. 159 Glass shelf with rails

▶ Hook in rail at the back. *Fig. 159 (1)*
▶ Hook in rail at the front. *Fig. 159 (2)*

9.3 Lid for EasyFresh-safe

You can remove the lid for cleaning.

9.3.1 Removing the lid

Make sure that the following requirements are fulfilled:

- ❑ The shelf directly above the drawer has been removed. (see 8.2 Shelves)
- ❑ The drawer directly below the lid has been removed. (see 8.5 Drawers)

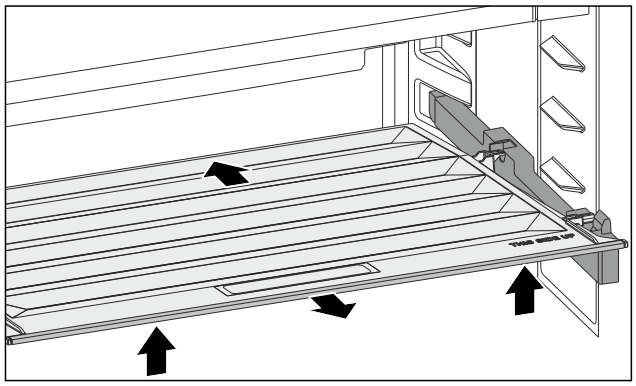

Fig. 160

▶ Push the lid backward.
▶ Lift up the lid forward.
▶ Remove the front lid by lifting it up at an angle.

9.3.2 Inserting the lid

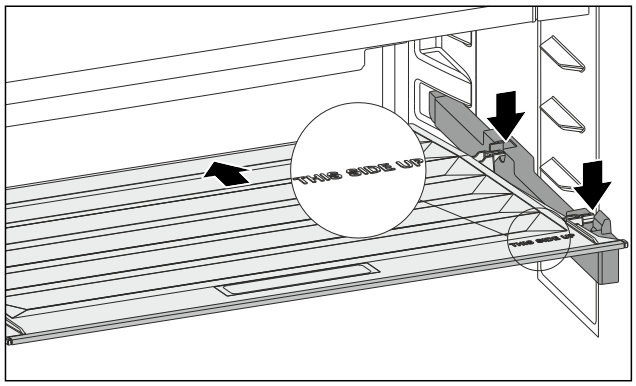

Fig. 161

If the lettering THIS SIDE UP is on top:

▶ Insert the rear bracket retainers in the corresponding rear openings.
▶ Push the lid backward.
▶ Lower the lid at the front and latch the front bracket retainers in the openings.
▶ Bring the lid to the desired position.

9.4 Defrosting the appliance

9.4.1 Defrosting the refrigerator compartment

Defrosting is performed automatically. The water from the thawing process runs out via the drain opening and is evaporated.

▶ Clean the drain hole regularly. (see 9.5 Cleaning the appliance)

9.4.2 Defrosting the freezer compartment with NoFrost

Defrosting is performed automatically by the NoFrost system. The moisture condenses on the evaporator and is periodically defrosted and evaporated.

The appliance does not need to be defrosted.

9.5 Cleaning the appliance

9.5.1 Preparation

WARNING
Danger of electric shock.
▶ Unplug refrigerator or disconnect power.

WARNING
Danger of fire
▶ Do not damage the refrigerant circuit.

▶ Empty appliance.
▶ Pull out the power plug.
-or-
▶ Activate CleaningMode. (see CleaningMode)

9.5.2 Cleaning the housing

NOTICE
Improper cleaning!
Damage to the appliance.
▶ Only use soft cleaning cloths and ph-neutral all-purpose cleaners.
▶ Do not use steel wool or sponges that scour or scratch.
▶ Do not use caustic or abrasive cleaning materials or those containing sand, chloride, or acids.

WARNING
Risk of injury or damage due to hot steam.
Hot steam can cause scalding/burns and damage to surfaces.
▶ Do not use steam cleaners.

▶ Wipe the housing down with soft, clean cloth. If very dirty, use lukewarm water with a neutral cleaner. Glass surfaces can also be cleaned with glass cleaner.

9.5.3 Cleaning the interior

NOTICE
Improper cleaning!
Damage to the appliance.
▶ Only use soft cleaning cloths and ph-neutral all-purpose cleaners.
▶ Do not use steel wool or sponges that scour or scratch.
▶ Do not use caustic or abrasive cleaning materials or those containing sand, chloride, or acids.

▶ Plastic surfaces: clean by hand with a soft clean cloth, lukewarm water and a little detergent.
▶ Metal surfaces: clean by hand with a soft clean cloth, lukewarm water and a little detergent.
▶ Drain hole: remove any deposits with a thin item such as a cotton bud.

9.5.4 Cleaning the equipment

NOTICE
Improper cleaning!
Damage to the appliance.
▶ Only use soft cleaning cloths and ph-neutral all-purpose cleaners.
▶ Do not use steel wool or sponges that scour or scratch.
▶ Do not use caustic or abrasive cleaning materials or those containing sand, chloride, or acids.

Clean with a soft, clean cloth, lukewarm water and a little washing up liquid:

- Shelf
- Split shelf
- VarioSafe
- Lid for EasyFresh-safe
- Drawer
- Components of the EasyTwist-Ice

Clean with a damp cloth:

- Retracting rails
  Please note: the grease in the tracks is there for lubrication purposes and must not be removed!

Clean in the dishwasher up to 60 °C (140 °F):

- Door racks
- VarioBox
- Bottle rack
- Holder for the split shelf
- Egg rack
- Butter dish

▶ Disassemble the equipment: see the relevant section.
▶ Clean the equipment.

9.5.5 Cleaning EasyTwist-Ice

Clean EasyTwist-Ice in the following cases:

- Initial commissioning
- If not in use for more than 48 hours
- If cleaning is needed

Disassembling EasyTwist-Ice

Make sure that the following requirements are fulfilled:

❑ Drawer is removed. (see 8.5 Drawers)
❑ Drawer is set down on a table.

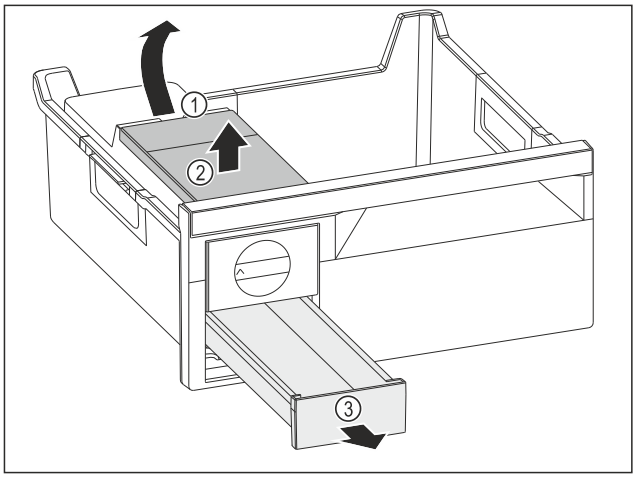

Fig. 162

▶ Removing the water tank: Lift the water tank at the recess *Fig. 162 (1)*.
▶ Remove the water tank *Fig. 162 (2)* upwards.
▶ Remove the ice cube tray *Fig. 162 (3)* from the front.

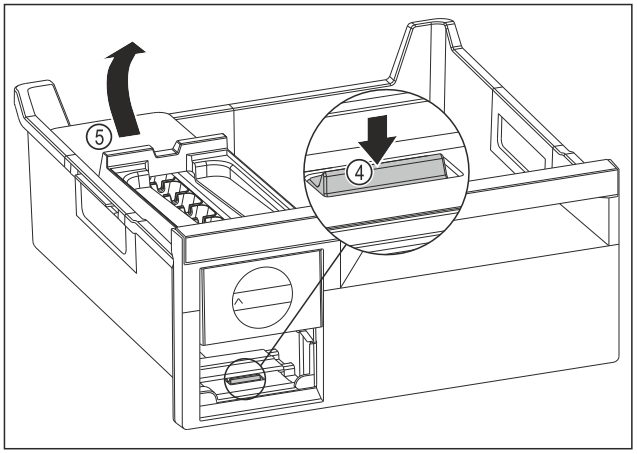

Fig. 163

▶ Removing the EasyTwist-Ice body: Use your finger to press the tab *Fig. 163 (4)* downward while at the same time lifting the EasyTwist-Ice body *Fig. 163 (5)* from behind with the other hand.
▶ Remove the EasyTwist-Ice body from the freezer drawer.

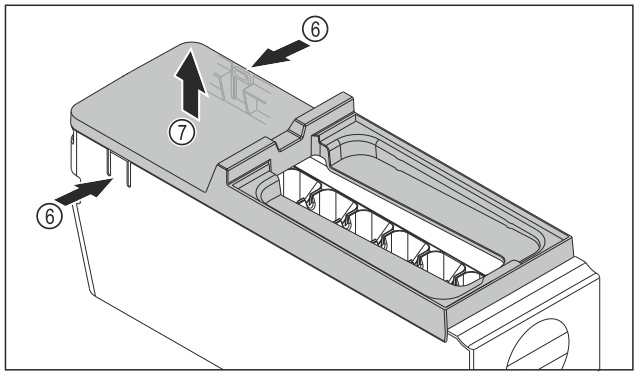

Fig. 164

▶ Removing the cover of the EasyTwist-Ice body: With one hand, press the tabs *Fig. 164 (6)* on both sides of the EasyTwist-Ice body.

▶ With the other hand, remove the cover *Fig. 164 (7)* upward.

▷ EasyTwist-Ice is disassembled in four parts. (see Fig. 165)

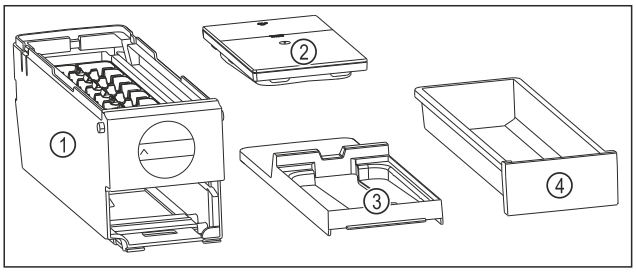

Fig. 165 Components of the EasyTwist-Ice

(1) EasyTwist-Ice body with ice cube tray	**(3)** Cover
(2) Water tank	**(4)** Ice cube tray

NOTICE

Danger of damage due to improper disassembly!

Breaking, jumping and splintering of the equipment. If you continue to disassemble the EasyTwist-Ice body, you might damage the rotary knob or other parts of the EasyTwist-Ice body.

▶ Only disassemble the EasyTwist-Ice into the illustrated components. (see Fig. 165)

▶ Clean the EasyTwist-Ice body *Fig. 165 (1)* as a complete unit.

Cleaning EasyTwist-Ice

Make sure that the following requirements are fulfilled:

❑ EasyTwist-Ice is disassembled. (see Disassembling EasyTwist-Ice)

▶ Clean the ice cube tray, water tank, cover, and the EasyTwist-Ice body with warm water with some dishwashing detergent.

▶ Dry all cleaned components with a dry cloth completely.

▷ EasyTwist-Ice is cleaned.

Installing EasyTwist-Ice

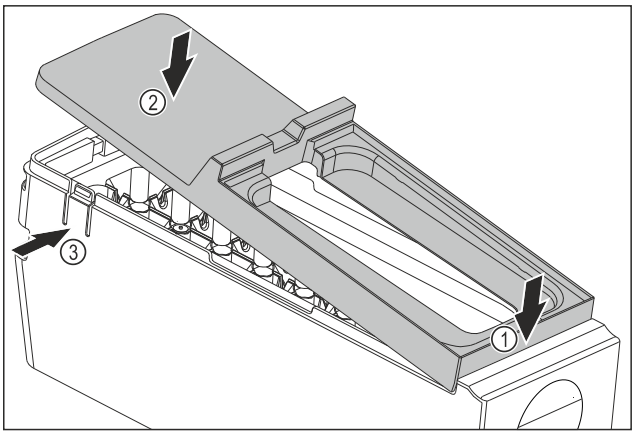

Fig. 166

▶ Installing the cover of the EasyTwist-Ice body: Fit the cover at the front. *Fig. 166 (1)*

▶ Lower the cover at the rear. *Fig. 166 (2)*

▷ The cover snaps audibly into place in both tabs *Fig. 166 (3)*.

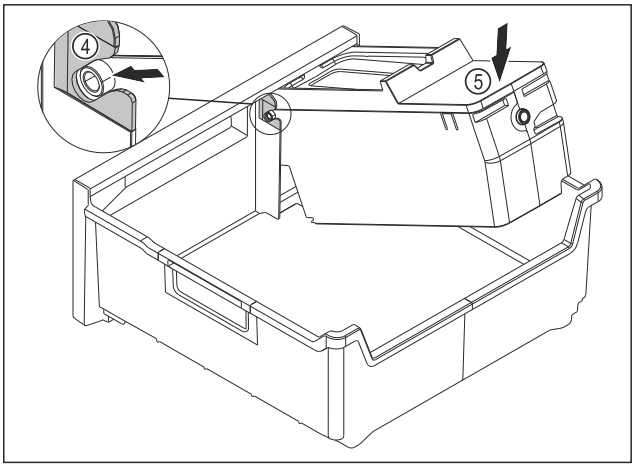

Fig. 167

▶ Installing the EasyTwist-Ice body: Insert the axes of the EasyTwist-Ice body into the guides *Fig. 167 (4)*.

▶ Press down the EasyTwist-Ice body *Fig. 167 (5)* at the rear.

▷ The EasyTwist-Ice body snaps in audibly.

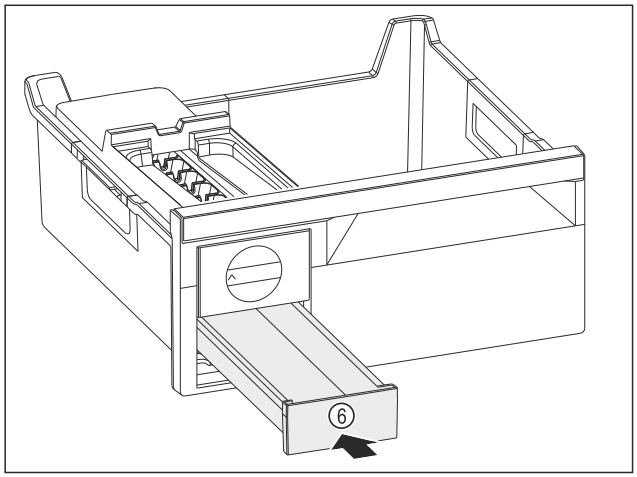

Fig. 168

▶ Insert the ice cube tray *Fig. 168 (6)*.

WARNING

Risk of poisoning due to contaminated water!

▶ Fill the water tank with potable water only.

▶ Fill the water tank with water.
▶ Insert the water tank.
▶ Insert the ice cube tray. (see 8.5 Drawers)
If using unfiltered water:
▶ Dispose of ice cubes that were made 24 hours after the first ice cube production.

-or-

If using filtered water:
▶ Dispose of ice cubes that were made 48 hours after the first ice cube production.

9.5.6 After cleaning

▶ Wipe dry the appliance and items of equipment
▶ Connect and switch on the appliance.
▶ Activate SuperFrost (see 7.2 Appliance functions) .
When the temperature is sufficiently cold
▶ Place the food inside.
▶ Repeat cleaning regularly.

10 Customer support

10.1 Technical specifications

Temperature zone	
Cool:	2 °C (34 °F) to 9 °C (46 °F)
Freezing	-26 °C (-15 °F) to -15 °C (5 °F)

Maximum amount of food to freeze / 24 hours	
Freezer	See type plate under “freezer capacity .../ 24 h”

Max. door capacity		
Number of drawers, freezer	Top door	Bottom door
3 drawers	12 kg (26.46 lb) 14 kg (30.86 lb) 9 kg (19.84 lb)	--

Maximum loading weight of the features			
Equipment	Appliance width 600 mm (23 1/2 in) (see installation instructions, appliance dimensions)	Appliance width 700 mm (27 9/16 in) (see installation instructions, appliance dimensions)	Appliance width 750 mm (29 1/2 in) (see installation instructions, appliance dimensions)
Drawer on glass shelf* (see 8.5.1 Drawer on appliance base or glass shelf*) *	15 kg (33.07 lb) *	--*	23 kg (50.71 lb) *
Partial-extension in the freezer section* (see 8.5.2 Drawer on telescopic rails) *	15 kg (33.07 lb) *	22 kg (48.50 lb) *	22 kg (48.50 lb) *

Ice cube production with EasyTwist-Ice	
Time required at -18 °C (-0 °F)	Approx. 5.5 hours
Time required with SuperFrost activated	Approx. 3 hours

Time required to reach various temperatures with VarioTemp		
Initial temperature	Target temperature	Time until target temperature is reached
-18 °C (-0 °F)	0 °C (32 °F)	> 8 hours
-18 °C (-0 °F)	8 °C (46 °F)	> 12 hours
8 °C (46 °F)	14 °C (57 °F)	> 6 hours
14 °C (57 °F)	-18 °C (-0 °F)	> 4 hours

For appliances with a WiFi connection:

*** Depending on model and options**

Frequency specification	
Frequency band	2.4 GHz
Maximum radiated power	< 100 mW
Purpose of the wireless equipment	Integration in the local WiFi network for data communication

10.2 Operating noises

The appliance makes noises while in operation.

- At **less cooling output** the appliance saves energy but takes longer to cool items. The volume is **lower**.
- At **a higher cooling output** the food cools more quickly. The volume is **higher**.

  Examples:
  - Activated functions (see 7.2 Appliance functions)
  - Running fan
  - Freshly sorted food
  - High ambient temperature
  - Door opened for long periods

Noise	Possible cause	Type of noise
Bubbling and splashing	Coolant is flowing into the cooling circuit.	Normal noise
Spitting and hissing	Coolant is spraying into the cooling circuit.	Normal noise
Humming	The appliance cools. The volume depends on the cooling output.	Normal noise
Sipping noises	The self-closing door is being opened and closed.	Normal noise

Noise	Possible cause	Type of noise
Whirring and murmuring	The fan is running.	Normal operating noise
Clicking	Components are being switched on and off.	Normal switching noise
Rattling or humming	Valves are active.	Normal switching noise

Noise	Possible cause	Type of noise	How to resolve
Vibration	Unsuitable setup	Error noise	Adjust the feet to make sure the appliance is horizontal.
Clattering	Equipment, Objects inside the appliance	Error noise	Secure equipment parts. Leave a gap between items.

10.3 Technical faults

Your appliance is designed and manufactured for reliable operation and a long service life. If a malfunction nonetheless occurs during operation, please check whether the malfunction is due to an operating error. In this case, you will have to be charged for the costs incurred, even during the warranty period.

You may be able to rectify the following faults yourself.

10.3.1 Appliance function

Defect	Cause	Remedy
The appliance does not work.	The appliance is not switched on.	▶ Switch on the appliance.
	The power plug is not properly inserted in the wall socket.	▶ Check the power plug.
	The powerfuse in the wall socket is not OK.	▶ Check the fuse.
	Power failure.	▶ Keep the appliance closed. ▶ Protect food: Place cold storage batteries on the food or use another freezer appliance if the power failure lasts longer.

Defect	Cause	Remedy
		▶ Do not re-freeze defrosted food.
	The IEC socket is not correctly plugged into the appliance.	▶ Check the IEC socket.
The temperature is not cold enough	This means that the door of the appliance is not closed properly	▶ Close the appliance door
	The ambient temperature is too high	▶ Problem solution: (see 2.4 Range of appliance use)
	The appliance was opened too frequently or for too long	▶ Wait to see if the required temperature corrects itself. If not, contact Customer Service. (see 10.4 Customer Service)
	Too much fresh food was placed inside without SuperFrost.	▶ Solution: (see SuperFrost)
	The temperature is incorrectly set	▶ Set to a colder temperature and check after 24 hours.
	The appliance is too near to a heat source (stove, heater etc).	▶ Change location of appliance or the heat source.
The door seal is defective or should be replaced for other reasons.	The door seal is interchangeable. You can replace it without the use of any special tools.	▶ Contact Customer Service. (see 10.4 Customer Service)
The appliance is iced up or condensation is building.	The door seal may have slipped out of its groove.	▶ Check the door seal is well placed in the groove.
The appliance is warm on the exterior surfaces.*	The heat of the refrigerant circuit is used to prevent condensate from forming	▶ This is normal.

10.3.2 Equipment

Defect	Cause	Remedy
The interior light does not turn on.	The appliance is not switched on.	▶ Switch on the appliance.
	The door was open for more than 15 minutes.	▶ If the door is open, the interior lighting switches off automatically after about 15 minutes.
	The LED interior light is faulty or the lid is damaged.	▶ Contact Customer Service. (see 10.4 Customer Service)

10.4 Customer Service

First check whether you can rectify the fault yourself (see 10 Customer support) . If you cannot rectify the problem, contact Customer Service.

You can find the address in the enclosed brochure “Liebherr-Service” or at home.liebherr.com/service.

* Depending on model and options

WARNING
Unprofessional repair!
Injuries.
- ▶ A damaged power cable may only be replaced by the manufacturer, the manufacturer's Customer Service or a similarly qualified person.
- ▶ For appliances with plug and play connection cables, the change can be made by the customer.

10.4.1 Contacting Customer Service

Make sure that the following appliance information is available:

- ❑ Appliance name (model and index)
- ❑ Service no. (service)
- ❑ Serial no. (S no.)

▶ Call up the appliance information via the display. (see Appliance information)

-or-

▶ Refer to the type plate for appliance information. (see 10.5 Rating plate)

▶ Take note of the appliance information.
▶ Notify customer service: Report errors and the appliance information.
▷ This will help us give you fast and accurate support.
▶ Follow further instructions from Customer Service.

10.5 Rating plate

The nameplate is located behind the drawers on the inside of the appliance.

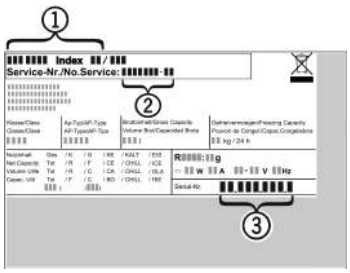

Fig. 169

(1) Appliance name **(3)** Serial no.
(2) Service no.

▶ Information from the nameplate.

11 Decommissioning

▶ Empty appliance.
▶ Switch off appliance. (see Switching appliance off and on)
▶ Pull the power plug from the outlet.
▶ If necessary, remove the IEC socket: Pull the IEC socket out of the appliance plug while turning it to the left and right at the same time.
▶ Clean appliance. (see 9.5 Cleaning the appliance)
▶ Leave the door open to prevent unpleasant odors.

12 Disposal

12.1 Preparing the appliance for disposal

WARNING
Risk of child entrapment!
Before you throw away your old refrigerator or freezer:
- ▶ Take off the doors.
- ▶ Leave the shelves in place so that children may not easily climb inside.

Liebherr uses batteries in some of its appliances. You should remove these before disposal of the old appliance for environmental reasons. If your appliance contains batteries, a corresponding notice is attached to the appliance.

Lamps — If you can remove the lamps yourself without destroying them, also remove these before disposal.

▶ Take the appliance out of operation.
▶ If possible: Remove lamps without destroying them.

12.2 Disposing of the appliance in an environmentally friendly manner

The appliance still contains valuable materials and must be collected separately from unsorted municipal waste so it can be recycled.

Dispose of batteries separately from the old appliance. Certain batteries should NOT go in household garbage or recycling bins. Waste batteries can always be recycled or taken to household hazardous waste collection points. To prevent fires from lithium-ion batteries, tape battery terminals and/or place batteries in separate plastic bags and never put these batteries in household garbage or recycling bins.

Lamps — Dispose of removed lamps via the respective collection systems.

For USA:	Check the Responsible Appliance Disposal (RAD) program to find a RAD partner near you.
For Canada:	Follow your local guidance about recycling and disposal capabilities near you.

WARNING

Leaking refrigerant and oil!

Fire. The refrigerant contained within the appliance is environmentally friendly, but flammable. The oil contained within the appliance is flammable. Escaping refrigerant and oil can ignite if they are of high enough concentration and are exposed to an external heat source.

- ▶ Do not damage the pipelines of the coolant circuit and the compressor.

- ▶ Observe the notes on appliance transport.
- ▶ Transport the appliance away without damaging it.
- ▶ Dispose of batteries, lamps, and the appliance according to the above specifications.

home.liebherr.com/fridge-manuals

EN Combined fridge-freezer

Issue date: 20250904

Part number index: 7086385-00

For Service in the U.S.: Liebherr Service Center
Toll Free: 1-866-LIEBHER or 1-866-543-2437
Service-appliances.us@liebherr.com
PlusOne Solutions, Inc.
3501 Quadrangle Blvd, Suite 120
Orlando, FL 32817

For Service in Canada: Liebherr Service Center
Toll Free: 1-888-LIEBHER or 1-888-543-2437
www.euro-parts.ca
EURO-PARTS CANADA
39822 Belgrave Road, Belgrave, Ontario, N0G 1E0
Phone: (519) 357-3320 | Fax: (519) 357-1326

User Guide

Quality, Design and Innovation

home.liebherr.com/fridge-manuals

LIEBHERR

Contents

1 General safety instructions ... 3

2 The appliance at a glance ... 5
2.1 Delivered contents ... 5
2.2 Overview of appliances and equipment ... 6
2.3 SmartDevice ... 6
2.4 Range of appliance use ... 6
2.5 Conformity ... 7
2.6 Spare parts ... 7

3 Functionality of the Touch & Swipe display. 7
3.1 Navigation and symbol explanation ... 7
3.2 Menus ... 8
3.3 Sleep mode ... 8

4 Start-up ... 8
4.1 Switching on appliance (first use) ... 8
4.2 Putting InfinitySpring into operation* ... 9
4.3 Starting the IceMaker for the first time ... 9
4.4 Starting the HydroBreeze for the first time* .. 9

5 Storage ... 9
5.1 Information regarding storage ... 9
5.2 Fridge compartment ... 10
5.3 BioFresh ... 10
5.4 Freezer compartment ... 11
5.5 Storage times ... 11

6 Energy saving ... 14

7 Use ... 14
7.1 Controls and displays ... 14
7.1.1 Status display ... 14
7.1.2 Display symbols ... 14
7.2 Appliance functions ... 14
7.2.1 Notes on the appliance functions ... 14
Switching appliance off and on ... 14
Switching temperature zone off and on ... 15
WiFi ... 16
Temperature ... 17
Temperature unit ... 18
BioFresh B-Value * ... 18
D-Value ... 19
SuperCool ... 19
VarioTemp ... 19
SuperFrost ... 20
Start defrost cycle ... 21
PartyMode ... 21
HolidayMode ... 22
SabbathMode ... 23
EnergySaver ... 23
HydroBreeze* ... 24
IceMaker / MaxIce ... 25
IceMaker water inflow ... 26
TubeClean ... 26
CleaningMode ... 27
Display Brightness ... 27
Door alarm ... 28
Input lock ... 28
Language ... 29
Appliance information ... 29
Software ... 29
Reminder ... 29
Demo mode ... 30
Resetting to factory settings ... 31
7.3 Messages ... 31
7.3.1 Overview of warnings ... 31
7.3.2 Ending warnings ... 32
7.3.3 Overview of reminders ... 33
7.3.4 Ending reminders ... 33

8 Equipment ... 34
8.1 Door racks ... 34
8.2 Shelves* ... 37
8.3 Split shelf ... 37
8.4 VarioSafe ... 38
8.5 InfinitySpring* ... 40
8.6 Variable bottle shelf ... 40
8.7 Drawers ... 41
8.8 Lid for Fruit & Vegetable-safe ... 42
8.9 HydroBreeze* ... 43
8.10 Glass shelves ... 44
8.11 IceMaker ... 45
8.12 VarioSpace ... 45

*** Depending on model and options**

8.13 Butter dish ... 46
8.14 Egg rack ... 46
8.15 Bottle rack ... 46
8.16 FlexSystem ... 46
8.17 Flexible ice compartment divider ... 47

9 Maintenance ... 48
9.1 FreshAir carbon filter ... 48
9.2 Water tank* ... 48
9.3 Water filter* ... 49
9.4 Disassembling / assembling pull-out systems ... 49
9.5 Removing / inserting the variable bottle shelf ... 50
9.6 Lid for Fruit & Vegetable-safe ... 50
9.7 Defrosting the appliance ... 51
9.8 Cleaning the appliance ... 51

10 Customer support ... 53
10.1 Technical specifications ... 53
10.2 Operating noises ... 54
10.3 Technical faults ... 54
10.4 Customer Service ... 56
10.5 Rating plate ... 56

11 Decommissioning ... 56

12 Disposal ... 57
12.1 Preparing the appliance for disposal ... 57
12.2 Disposing of the appliance in an environmentally friendly manner ... 57

Congratulations on the purchase of your new appliance. With this purchase, you have chosen all the advantages of the latest refrigeration technology, guaranteeing you a high-quality appliance with a long life span and high operating safety.

The equipment of your appliance gives you the highest level of day-to-day ease of operation.

Together we are making an active contribution to the conservation of our environment by purchasing this appliance which is manufactured in an environmentally friendly process with the use of recyclable materials.

We hope you enjoy your new appliance.

The manufacturer is constantly working to improve all types and models. Therefore, please be aware that we reserve the right to make changes to the shape, equipment and technology.

Symbol	Explanation
	Read instructions Please read the information in these instructions carefully to understand all of the benefits of your new appliance.
	Additional information online The digital manual with supplemental information can be found online by scanning the QR code on the front page of this manual or by entering the service number at **home.liebherr.com/fridge-manuals**.
	Check appliance Check all parts for transport damage. If you have any complaints, please contact your agent or customer service.
	Differences These instructions apply to a range of models, so there may be differences. Sections that apply to certain models only are indicated by an asterisk (*).
	Instructions and results Instructions are marked with a ▶. Results are marked with a ▷.
	Videos Videos about the appliances are available on the YouTube channel of Liebherr-Hausgeräte.

Open-source licenses:

The appliance includes software components that make use of open-source licenses. You can find information on the open-source licenses to be used here: **home.liebherr.com/open-source-licenses**

These operating instructions apply to:

SCB7760IM
CB7790IM
SCB5790IM

1 General safety instructions

Please keep these operating instructions in a safe place so you can refer back to them at any time.

If you pass the appliance on, please hand these operating instructions to the new owner.

Read and follow these instructions. They contain safety information which is important for safe and problem-free installation and operation. Always read and follow the safety information.

Dangers for the user:

- This appliance is not intended for use by persons (including children) with reduced physical, sensory or mental capabilities, or lack of experience and knowledge, unless they have been given supervision or instruction concerning use of the appliance by a person responsible for their safety. Children should be supervised to ensure that they do not play with the appliance. Cleaning and user maintenance must not be performed by children unless they are supervised. Children between the ages of 3 and 8 may load and unload the appliance. Children under the age of 3 must be kept away from the appliance unless they are constantly supervised.

- **IMPORTANT:** The power plug must be easily accessible so that the appliance can be disconnected from the mains quickly in an emergency. It must not be behind the back of the appliance.
- The socket must be easily accessible so that the appliance can be disconnected quickly from the electricity in an emergency. It must not be located in the area behind the appliance.
- Always hold the appliance at the plug when disconnecting it from the household power. Do not pull on the cable.
- Disconnect the power plug or fuse if there is a malfunction.
- Do not damage the power cable. Do not operate the appliance with a faulty power cable. If the supply cord is damaged, it must be replaced by the manufacturer, its service agent or similarly qualified persons in order to avoid a hazard. For Plug and Play connections, the change may be carried out by the customer.
- Repairs and work on the appliance may only be carried out by Customer Service or other specifically trained qualified personnel.
- Always follow the instructions when assembling, connecting and disposing of the appliance.
- The manufacturer is not liable for damage arising from a defective fixed water connection.

Risk of fire:

- The refrigerant contained within the appliance (specifications on the identification plate) is environmentally friendly, but flammable. Leaking refrigerant can ignite.
  - **WARNING**: Do not damage the refrigerant circuit.
  - Do not handle ignition sources inside the appliance.
  - **WARNING**: Do not use electrical appliances inside the food storage compartments of the appliance, unless they are of the type recommended by the manufacturer (e.g. steam cleaning appliances, heating appliances, ice cream makers).
  - If refrigerant leaks: Remove naked flames or ignition sources located near the area of the leak. Ventilate the room well. Contact Customer Service.
- Do not operate the appliance near explosive gases.
- Do not store or use gasoline or other flammable gases and liquids near the appliance.
- Do not store explosive substances such as aerosol cans with a flammable propellant in this appliance. You can recognize such spray cans by the printed list of contents or by a flame symbol. Any leaking gases can be ignited by electrical components.
- Keep lit candles, lamps and other objects with naked flames away from the appliance so they do not cause a fire.
- Alcoholic beverages or other containers holding alcohol must always be tightly sealed for storage purposes. Any leaking alcohol can be ignited by electrical components.

Risk of falling or toppling over:

- **WARNING**: To avoid a hazard due to instability of the appliance, it must be fixed in accordance with the instructions.
- Do not stand on the base, drawers, doors etc. or use them as improper supports. This applies in particular to children.

Danger of poisoning:

- Do not consume spoiled food.
- **WARNING**: Connect to potable water supply only.
- Do not use any old or already premounted water supply lines.

Danger of frostbite, feeling of numbness and pain:

- Avoid prolonged skin contact with cold surfaces or chilled/frozen food or take protective measures, e.g. wear gloves.

Risk of injury and damage:

- Hot steam may cause injuries. Do not use any electrical heating or steam cleaning equipment, naked flames or defrosting sprays for defrosting measures.
- **WARNING**: Do not use mechanical devices or other means to accelerate the defrosting process, other than those recommended by the manufacturer.
- Do not remove ice using sharp objects.
- **WARNING**: Keep clear of obstruction all ventilation openings in the appliance enclosure or in the structure for building-in.
- **WARNING**: Risk of child entrapment. Before you throw away your old refrigerator or freezer:
  - Take off the doors.
  - Leave the shelves in place so that children may not easily climb inside.

Risk of crushing:

- Do not hold onto the hinge when opening and closing the door. Fingers may become trapped.

California Proposition 65

- **WARNING**: This product can expose you to chemicals including Diisononyl Phthalate (DINP), which is known to the State of California to cause cancer, and Di-isodecyl Phthalate (DIDP), which is known to the State of California to cause birth defects or other reproductive harm. For more information, go to www.P65Warnings.ca.gov

FCC Warning

- Changes or modifications not expressly approved by the party responsible for compliance could void the user's authority to operate the equipment.

FCC information

- This appliance has been tested and found to comply with the limits for a Class B digital device, pursuant to part 15 of the FCC Rules. These limits are designed to provide reasonable protection against harmful interference from an installation in residential areas. This appliance generates, uses and can radiate radio-frequency energy and, if not installed and used in accordance with the instructions, may cause harmful interference to radio communications. However, there is no guarantee that interference will

not occur in a particular installation. If this appliance does cause harmful interference to radio or television reception, which can be determined by switching the appliance on and off, the user should try to correct the interference by one or more of the following measures:

- Reorient or relocate the receiving antenna.
- Increase the distance between the appliance and receiver.
- Connect the appliance to an outlet on a circuit different from that to which the receiver is connected.
- Consult the dealer or an experienced radio/TV technician for help.

FCC Radio Frequency Exposure Statement

- This appliance is found to comply with FCC radio frequency (RF) exposure limits set for an uncontrolled environment. This transmitter must not be set up or operated in conjunction with another antenna or another transmitter.
- This appliance should be installed and operated with a minimum space of 200 mm (7 7/8 in) between the antenna and your body. The user must follow the specific operating instructions to ensure compliance with RF exposure.

IC information

- This appliance has license-exempt transmitters/receivers, which comply with the license-exempt Radio Standards Specification (RSS) of Innovation, Science and Economic Development Canada. Operation is subject to the following two conditions:
  - This appliance may not cause interference.
  - This device must accept any interference, including interference that may cause undesired operation of the device.

IC Radio Frequency Exposure Statement

- This appliance meets the IC RSS-102 limits for radiation exposure, which were defined for an uncontrolled environment. This appliance should be installed and operated so that there is a minimum space of 200 mm (7 7/8 in) between the antenna and your body.

Symbols on the device:

The symbol may be located on the compressor. It refers to the oil in the compressor and refers to the following danger: Can be fatal if swallowed or inhaled. This notice only applies for recycling. There is no danger during normal operation.

WARNING: Risk of fire / flammable materials. The symbol is located on the compressor and indicates the danger from flammable materials. Do not remove the label.

This label or a similar one may be located on the rear of the appliance. This label indicates that there are vacuum insulation panels (VIP) or perlite panels in the door and/or housing. This notice only applies for recycling. Do not remove the label.

Observe the warning messages and other detailed information in the other sections:

⚠	DANGER	Indicates an immediately hazardous situation, which if not avoided, will result in death or serious injury.
⚠	WARNING	Indicates a hazardous situation, which if not avoided, could result in death or serious injury.
⚠	CAUTION	Indicates a hazardous situation, which if not avoided, could result in minor or moderate injury.
	NOTICE	Indicates a hazardous situation, which if not avoided, could result in damage to property.
	Note	Indicates useful advice and tips.

2 The appliance at a glance

2.1 Delivered contents

Check all parts for transport damage. If you have any complaints, please contact the retailer or customer service. (see 10.4 Customer Service)

Delivery contains the following parts:

- Standalone appliance
- Equipment (depending on your model)
- Installation parts (depending on your model)
- User Guide
- Installation Guide
- Warranty documents

2.2 Overview of appliances and equipment

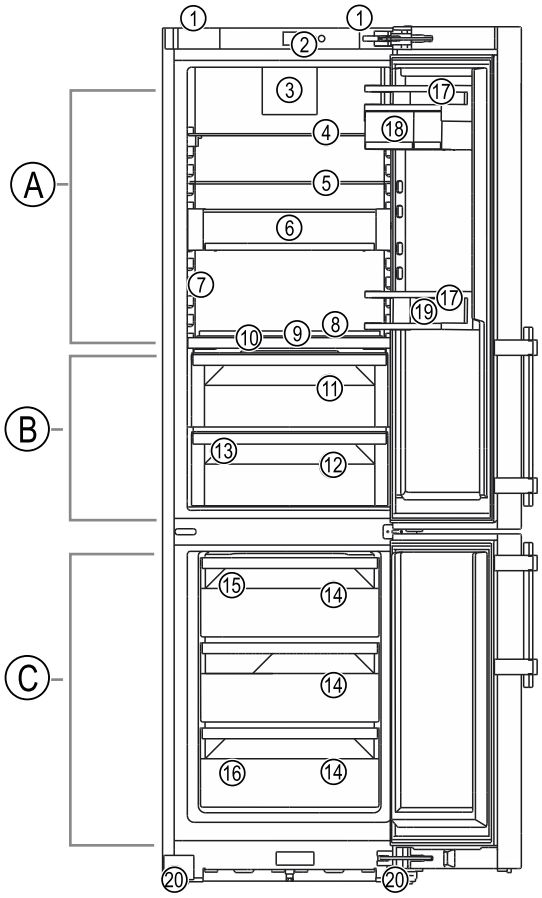

Fig. 1 Example illustration

Temperature range

(A) Fridge section
(B) BioFresh
(C) Freezer section

Equipment

(1) Transport handle
(2) Controls
(3) Fan with FreshAir activated charcoal filter
(4) Separable storage shelf
(5) Shelf*
(6) VarioSafe
(7) Variable bottle rack
(8) HydroBreeze*
(9) InfinitySpring*
(10) Lid for Fruit & Vegetable-safe
(11) Fruit & Vegetable-safe
(12) Meat & Dairy-safe*
(12) Fish & Seafood-safe*
(13) Defrost water drain
(14) Drawer
(15) IceMaker
(16) Type plate
(17) Door racks
(18) VarioBox
(19) Bottle holder
(20) Adjustable feet

2.3 SmartDevice

SmartDevice is the networking solution for your fridge-freezer.

If your appliance is SmartDevice-enabled or compatible, you can quickly and easily connect your appliance to your WiFi. With the SmartDevice app, you can operate your appliance from a mobile device. Additional functions and setting options are available in the SmartDevice app.

SmartDevice-enabled appliance:	Your appliance is capable of being a SmartDevice. To be able to connect your device to WiFi, you need to download the SmartDevice app.
More information about SmartDevice:	**smartdevice.liebherr.com**
Downloading the SmartDevice app:	After you have installed and configured the SmartDevice app, you can connect your appliance to your WLAN using your SmartDevice app the WLAN device function (see WiFi) .

2.4 Range of appliance use

Normal use

This appliance is intended to be used in household and similar applications such as,

- staff kitchen areas in shops, offices and other working environments;
- farm houses and by clients in hotels, motels and other residential type environments;
- bed and breakfast type environments;
- catering and similar non-retail applications.

The appliance is not suitable as a built-in unit;

All other types of uses are not permitted.

Foreseeable misuse

The following uses are specifically prohibited:

- Storage and cooling of medication, blood plasma, laboratory preparations or similar substances and products in accordance with the CMDCAS and FDA 510(k)
- Use outdoors
- Use in moist areas exposed to the rain
- Use in outdoor areas with very high humidity
- Use in areas at risk of explosion

*** Depending on model and options**

Incorrect appliance use can cause damage to the stored products or cause them to spoil.

Climate ratings

The appliance is set to operate within specific ambient temperature limits according to its climate rating The climate rating for your appliance is printed on the rating plate

Note

▶ To guarantee trouble-free operation, comply with the indicated ambient temperatures.

Climate rating	for ambient temperatures from
SN	10 °C (50 °F) to 32 °C (90 °F)
N	16 °C (61 °F) to 32 °C (90 °F)
ST	16 °C (61 °F) to 38 °C (100 °F)
T	16 °C (61 °F) to 43 °C (109 °F)
SN-ST	10 °C (50 °F) to 38 °C (100 °F)
SN-T	10 °C (50 °F) to 43 °C (109 °F)

2.5 Conformity

The refrigerant circuit has been tested for leaks. The appliance complies with the applicable safety regulations and with the corresponding directives.

The BioFresh compartment meets the requirements of a cold storage compartment as set out in EN ISO 8561.

2.6 Spare parts

Spare parts for functional and storable parts of the equipment are available for 15 years.

3 Functionality of the Touch & Swipe display

You operate your appliance using the Touch & Swipe display. You select appliance functions in the Touch & Swipe display (hereafter referred to as display) by tapping them. If you do not perform any action on the display for 10 seconds, the display either jumps back to the higher-level menu or directly to the status display.

3.1 Navigation and symbol explanation

In the illustrations, different symbols are used to navigate the display. The following table describes these symbols.

Symbol	Description
	Briefly touch the display: Activates/deactivates function. Confirms selection. Opens submenu.
	Touch the display for a specified time (e.g. 3 seconds): Activates/deactivates function or value.
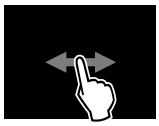	**Swipe left or right:** Navigate in the menu.
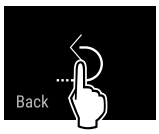	**Briefly touch the Back symbol:** Jumps back one menu level.
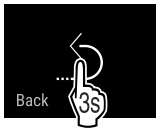	**Press and hold the Back symbol for 3 seconds:** Jumps back to the status display.
	Arrow with clock: It takes more than 10 seconds for the following message to appear in the display.
	Arrow with a time indication: It takes the specified amount of time until the following message appears in the display.
	“Open Settings menu” symbol: Navigates to the Settings menu and opens the settings menu. If necessary: Navigate to the desired function in the Settings menu. (see 3.2.1 Opening the Settings menu)
	“Open Advanced menu” symbol: Navigates to the Advanced menu and opens the advanced menu. If necessary: Navigate to the desired function in the Advanced menu. (see 3.2.2 Opening expanded menu)
No action for 10 seconds	If you do not perform any action on the display for 10 seconds, the display either jumps back to the higher-level menu or directly to the status display.

Symbol	Description
Open door and close it again.	If you open the door and immediately close it again, the display jumps directly back to the status display.

Note: Illustrations of the display are shown in the English version.

3.2 Menus

The appliance functions are distributed over various menus:

Menu	Description
Main menu	When you switch the appliance on, you are automatically in the main menu. From here you can navigate to the most important appliance functions, to the Settings menu and to the Advanced menu.
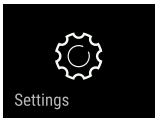 Settings menu	The Settings menu contains additional appliance functions for setting up your appliance.
Advanced menu	The advanced menu contains special appliance functions for setting up your appliance. Access to the Advanced menu is protected by the numerical code **1 5 1**.

3.2.1 Opening the Settings menu

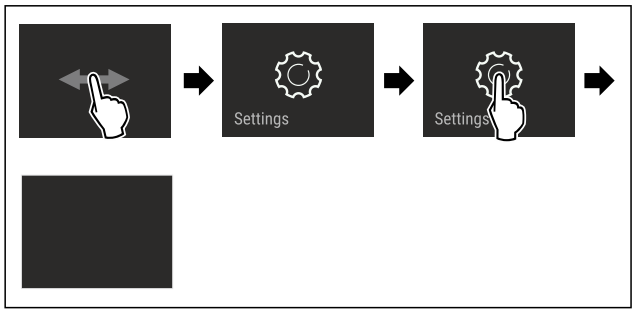

Fig. 2 Example illustration

▶ Carry out action steps according to the illustration.
▷ Settings menu is open.
▶ If necessary: Navigate to the desired function.

3.2.2 Opening expanded menu

Fig. 3

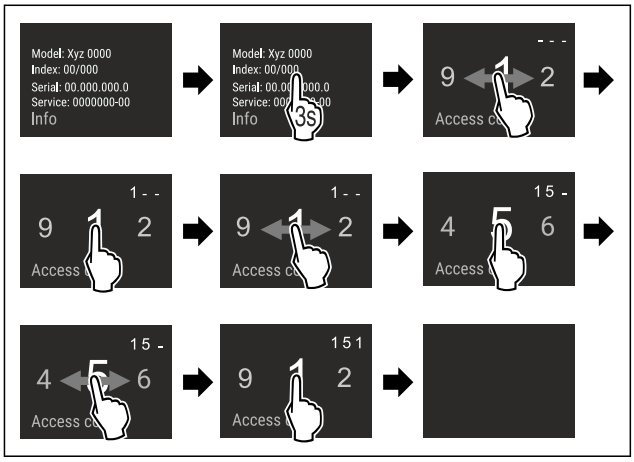

*Fig. 4 Example illustration, access with numerical code **151***

▶ Carry out action steps according to the illustration.
▷ Expanded menu is open.
▶ If necessary: Navigate to the desired function.

3.3 Sleep mode

If you do not touch the display for 1 minute, the display switches to sleep mode. In sleep mode, the display brightness is dimmed.

3.3.1 Ending sleep mode

▶ Touch the display briefly with your finger.
▷ Sleep mode is ended.

4 Start-up

4.1 Switching on appliance (first use)

Make sure that the following requirements are fulfilled:

- ❑ The appliance has been installed and connected in accordance with the installation instructions.
- ❑ All adhesive strips, adhesive and protective films and transport locks are removed from inside and on the appliance.
- ❑ All marketing leaflets are removed from the drawers.
- ❑ You are familiar with the functionality of the Touch & Swipe display. (see 3 Functionality of the Touch & Swipe display)

Switch on the appliance using the Touch & Swipe display.

▶ If the display is in sleep mode: Briefly touch the display.
▶ Carry out action steps according to the illustration.

*** Depending on model and options**

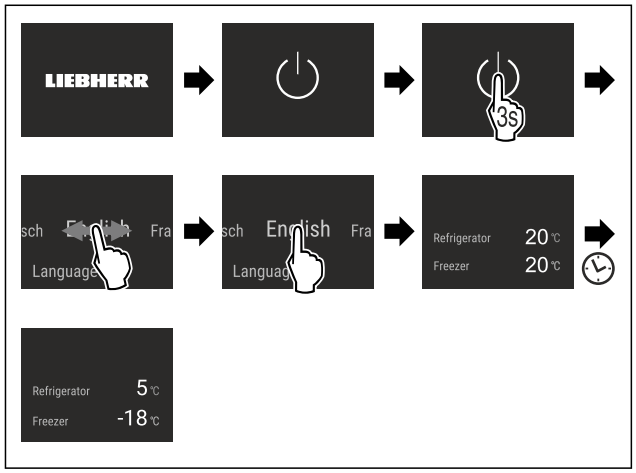

Fig. 5 Example illustration

▷ Status display appears.
▷ The appliance cools to the temperature set at the factory.
▷ The appliance starts in demo mode (status display with DEMO appears): If the appliance starts in demo mode, you can deactivate demo mode within the next 5 minutes. (see Demo mode)

More information:

- Start the InfinitySpring for the first time. (see 4.2 Putting InfinitySpring into operation*) *
- Start the IceMaker for the first time. (see 4.3 Starting the IceMaker for the first time)
- Start the HydroBreeze for the first time. (see 4.4 Starting the HydroBreeze for the first time*) *
- Start the SmartDevice for the first time. (see 2.3 SmartDevice) and (see WiFi)

Note
The manufacturer recommends:
▶ Stock with food: Wait for around 6 hours until the set temperature is reached.
▶ **Store frozen foods** at -18 °C (-0 °F) or colder.
▶ Observe the notes on storing food. (see 5.1 Information regarding storage)

Note
Accessories can be purchased from the Liebherr Service Center. The address for your respective country can be found on the back of the instructions.

4.2 Putting InfinitySpring into operation*

If your appliance is equipped with an InfinitySpring, **before the first use** you must bleed the water system for the InfinitySpring and clean the InfinitySpring.

Make sure that the following requirements are fulfilled:

❑ The water supply is connected. See the Installation Guide or installation instructions.
❑ The water tank is fitted. See the Installation Guide or installation instructions.
❑ The water filter is fitted. See the Installation Guide or installation instructions.*
❑ Appliance is fully connected.

4.2.1 Vent the water system

▶ Open the appliance door.
▶ Push a glass against the lower part of the InfinitySpring dispenser.
▷ The upper part moves out and air escapes or water flows into the glass.
▶ Continue until the water flows evenly into the glass.
▷ The water system is now bled.

4.2.2 Cleaning the InfinitySpring

(see 9.8.5 Cleaning the InfinitySpring *)

4.3 Starting the IceMaker for the first time

If your appliance is equipped with IceMaker, you must clean the IceMaker **before using it for the first time**.

Make sure that the following requirements are fulfilled:

❑ The water supply has been connected. See Installation Guide or mounting instructions.
❑ The appliance is properly connected.

▶ Clean the IceMaker. (see 9.8.7 Cleaning the IceMaker)

4.4 Starting the HydroBreeze for the first time*

If your appliance is equipped with HydroBreeze, you must clean the HydroBreeze **before using it for the first time**.

Make sure that the following requirements are fulfilled:

❑ The appliance is properly connected.

▶ Clean the HydroBreeze. (see 9.8.6 Cleaning the HydroBreeze*)
▶ Fill the water tank. (see 8.9.1 Fill the water tank)
▶ Activate HydroBreeze. (see HydroBreeze*)

5 Storage

5.1 Information regarding storage

WARNING
Risk of fire from electrical appliances!
If you use electrical devices in the food area of your appliance, they may case a fire.
▶ Do not use electrical devices in the food area of the appliance if they have not been recommended by the manufacturer.

Note
Insufficient ventilation results in an increase in energy consumption and reduction of the refrigerating performance
▶ Always keep the air slots unobstructed.

Observe the following specifications for storage:

- Keep the air vents on the fan free.
- In the freezer compartment: Package food properly.
- Package or cover foods that readily take on or give off odors or taste in closed containers.
- Package raw meat or fish in clean, closed containers. This will prevent meat or fish from touching or dripping onto other food.
- Keep liquids in closed containers.
- Leave space between goods to ensure good air circulation.
- Store food according to the instructions on the packaging.
- Always observe the best-before date indicated on the packaging.

Note
Failure to follow these guidelines can lead to foodstuffs spoiling.

5.2 Fridge compartment

The air circulation in the appliance creates different temperature zones. You will find the different temperature zones in the appliance and equipment overview. (see 2.2 Overview of appliances and equipment)

5.2.1 Arranging your food properly

▶ Upper area and door: Store butter, cheese, canned food and tubes.
▶ Coldest temperature zone: Store perishable foods such as pre-cooked meals.

5.3 BioFresh

BioFresh will extend the storage time for some fresh foods compared to traditional refrigeration.

Taste, freshness and nutritional value (vitamin groups B and C) are largely retained. Less spoilage and shriveling of fruit and vegetables. The food keeps fresher and retains its natural goodness.

Note
The temperature can drop to 0 °C (32 °F) which means foods could easily freeze.
▶ Store cold-sensitive produce such as cucumbers, eggplants, zucchinis and tropical fruit in the fridge compartment.

5.3.1 Fruit & Vegetable safe

This safe creates a climate of close to 0 °C (32 °F). The compartment lid ensures constant levels of humidity. This storage climate is suitable for storing unpackaged food with high intrinsic moisture (for example, lettuce, vegetables, fruit).

The humidity in the compartment depends on the moisture content of the chilled goods placed in it, and also depends on how often the compartment is opened. You can regulate the humidity level.

Arranging your food properly

▶ Store unpackaged fruit and vegetables.
If the humidity is too high:
▶ Regulate the humidity.

5.3.2 Meat & Dairy safe

This safe creates a storage climate of close to 0 °C (32 °F). This storage climate is suitable for more sensitive foods (e.g. dairy products, meat, fish, sausage).*

This safe creates a storage climate of close to 0 °C (32 °F). This storage climate is suitable for more sensitive foods (e.g. dairy products, meat, sausage).*

Arranging your food properly

▶ Store dry or packaged food.

5.3.3 Fish & Seafood safe -2°C | 0°C *

This safe creates a storage climate of between -2 °C (28 °F) and 0 °C (32 °F). This storage climate is great for dry or packaged groceries (for example, dairy products, meat, fish, seafood, sausage).

This compartment includes a Fish & Seafood tray that you can move or take away.

You can set the temperature via the Touch & Swipe display. Dividing the compartment into different temperature zones is only possible with the Fish & Seafood tray inserted. (see Setting the temperature in the fridge section)

The following temperature combinations are possible:

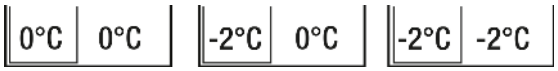

Fig. 6

Arranging your food properly

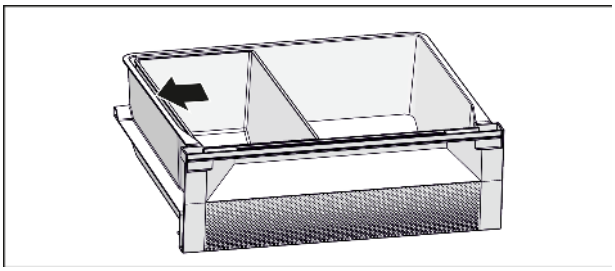

* Depending on model and options

Fig. 7

▶ For an optimum cooling function: Position Fish & Seafood tray according to illustration (see Fig. 7) .

▶ Temperature zone -2 °C (28 °F): Store fresh seafood or fish.

▶ Temperature zone 0 °C (32 °F): Store dairy products or packaged meats.

Note

You can achieve the highest level of energy efficiency using the temperature combination **0 °C (32 °F) / 0 °C (32 °F)**.

Energy consumption is slightly higher using the temperature combination **-2 °C (28 °F) / 0 °C (32 °F)** and **-2 °C (28 °F) / -2 °C (28 °F)**.

5.4 Freezer compartment

Here, a dry, frosty storage climate is created at -18 °C (-0 °F). The frosty storage climate is suitable for storing frozen food for several months, for making ice cubes or freezing fresh food.

5.4.1 Freezing food

Freezing quantity

The maximum amount of fresh food that you can freeze within 24 hours is specified on the type plate (see 10.5 Rating plate) under “Freezing capacity ... kg/ 24h.”

To ensure that food quickly freezes through, adhere to the following quantities per package:

- Fruit and vegetables up to 1 kg (2.20 lb)
- Meat up to 2.5 kg (5.51 lb)

Freezing food using SuperFrost

Depending on the amount of food to be frozen, you can activate SuperFrost before freezing to reach lower freezing temperatures. (see SuperFrost)

▶ Activate SuperFrost if the amount of food you have to freeze is more than approx. 2 kg (4.41 lb).

The time at which you activate SuperFrost depends on the amount of food you have to freeze:

Freezing quantity	Time at which you should activate SuperFrost
Small amount of food to freeze	Activate SuperFrost about 6 hours before freezing. As soon as the appliance automatically deactivates SuperFrost you can begin rearranging your food items.
Maximum amount of food to freeze	Activate SuperFrost about 24 hours before freezing. As soon as the appliance automatically deactivates SuperFrost you can begin rearranging your food items.

Arranging your food properly

CAUTION

Risk of injury from broken glass!

Bottles and cans with beverages can burst during freezing. This applies in particular to carbonated beverages.

▶ Only freeze bottles and cans with beverages if you have activated the BottleTimer function in the SmartDevice app.

Freezing quantity	Arranging your food properly
Small amount of food to freeze	Place packaged food in the top drawer. If possible, place groceries at the back of the drawer near the rear wall.
Maximum amount of food to freeze	Distribute packaged groceries throughout all drawers, but only store food that is already deep frozen in the bottom drawer. If possible, place groceries at the back of the drawer near the rear wall.

5.4.2 Defrosting food

WARNING

Danger of food poisoning!

▶ Do not re-freeze defrosted food.

▶ Use defrosted foodstuff as quickly as possible.

You can defrost food in several ways:

- In the fridge compartment
- In the microwave
- In the oven/fan-assisted oven
- At room temperature

▶ Take out only as much food as necessary.

5.5 Storage times

The storage times given are guidelines

Food with a “use by” date must still be consumed by the date indicated on the package

5.5.1 Fridge

The best-before date stated on the packaging applies.

5.5.2 BioFresh

Guideline storage times for the Meat & Dairy-Safe		
Butter	at 1 °C (34 °F)	up to 90 days
Hard cheese	at 1 °C (34 °F)	up to 110 days
Milk	at 1 °C (34 °F)	up to 12 days
Sausage, cold cuts	at 1 °C (34 °F)	up to 8 days
Poultry	at 1 °C (34 °F)	up to 6 days
Pork	at 1 °C (34 °F)	up to 6 days
Beef	at 1 °C (34 °F)	up to 6 days
Game	at 1 °C (34 °F)	up to 6 days

Note

▶ Note that higher-protein foods spoil more quickly So, shellfish and crustaceans perish faster than fish, and fish perishes faster than meat.

Guideline storage times for the Fruit & Vegetable-Safe		
Vegetables, lettuce		
Artichokes	at 1 °C (34 °F)	up to 14 days
Celery	at 1 °C (34 °F)	up to 28 days
Cauliflower	at 1 °C (34 °F)	up to 21 days
Broccoli	at 1 °C (34 °F)	up to 13 days
Endives	at 1 °C (34 °F)	up to 27 days

Guideline storage times for the Fruit & Vegetable-Safe		
Mâche	at 1 °C (34 °F)	up to 19 days
Peas	at 1 °C (34 °F)	up to 14 days
Kale	at 1 °C (34 °F)	up to 14 days
Carrots	at 1 °C (34 °F)	up to 80 days
Garlic	at 1 °C (34 °F)	up to 160 days
Cabbage turnip	at 1 °C (34 °F)	up to 14 days
Iceberg lettuce	at 1 °C (34 °F)	up to 13 days
Herbs	at 1 °C (34 °F)	up to 13 days
Leeks	at 1 °C (34 °F)	up to 29 days
Mushrooms	at 1 °C (34 °F)	up to 7 days
Radishes	at 1 °C (34 °F)	up to 10 days
Brussels sprouts	at 1 °C (34 °F)	up to 20 days
Asparagus	at 1 °C (34 °F)	up to 18 days
Spinach	at 1 °C (34 °F)	up to 13 days
Savoy cabbage	at 1 °C (34 °F)	up to 20 days
Fruit		

*** Depending on model and options**

Guideline storage times for the Fruit & Vegetable-Safe		
Apricots	at 1 °C (34 °F)	up to 13 days
Apples	at 1 °C (34 °F)	up to 80 days
Pears	at 1 °C (34 °F)	up to 55 days
Blackberries	at 1 °C (34 °F)	up to 3 days
Dates	at 1 °C (34 °F)	up to 180 days
Strawberries	at 1 °C (34 °F)	up to 7 days
Figs	at 1 °C (34 °F)	up to 7 days
Blueberries	at 1 °C (34 °F)	up to 9 days
Raspberries	at 1 °C (34 °F)	up to 3 days
Red currants	at 1 °C (34 °F)	up to 7 days
Cherries, sweet	at 1 °C (34 °F)	up to 14 days
Kiwi	at 1 °C (34 °F)	up to 80 days
Peaches	at 1 °C (34 °F)	up to 13 days
Plums	at 1 °C (34 °F)	up to 20 days
Cranberries	at 1 °C (34 °F)	up to 60 days
Rhubarb	at 1 °C (34 °F)	up to 13 days

Guideline storage times for the Fruit & Vegetable-Safe		
Gooseberries	at 1 °C (34 °F)	up to 13 days
Grapes	at 1 °C (34 °F)	up to 29 days

Guideline storage times for the Fish & Seafood-Safe*		
Seafood		
Crab	at -2 °C (28 °F)	up to 4 days
Mussels	at -2 °C (28 °F)	up to 6 days
Sushi	at -2 °C (28 °F)	up to 4 days
Fish	at -2 °C (28 °F)	up to 4 days

5.5.3 Freezer

Guidelines for storage periods for various foods		
Ice cream	at -18 °C (-0 °F)	2 to 6 months
Sausage, ham	at -18 °C (-0 °F)	2 to 3 months
Bread, bakery products	at -18 °C (-0 °F)	2 to 6 months
Game, pork	at -18 °C (-0 °F)	6 to 9 months
Fish, fatty	at -18 °C (-0 °F)	2 to 6 months
Fish, lean	at -18 °C (-0 °F)	6 to 8 months
Cheese	at -18 °C (-0 °F)	2 to 6 months

*** Depending on model and options**

Guidelines for storage periods for various foods		
Poultry, beef	at -18 °C (-0 °F)	6 to 12 months
Vegetables, fruit	at -18 °C (-0 °F)	6 to 12 months

6 Energy saving

- Always ensure good ventilation. Keep clear of obstruction all ventilation openings in the appliance enclosure or in the structure for building-in.
- Never block air slits in the fan.
- Do no set up the appliance in an area with direct sunlight, next to a heating unit or similar.
- If you set up the appliance directly next to an oven, its energy consumption may increase slightly. This depends on the service life and how often the oven is used.
- Energy consumption depends on installation conditions such as the ambient temperature (see 2.4 Range of appliance use) . A warmer ambient temperature can increase the energy consumption.
- Avoid opening the appliance door for any longer then necessary
- The lower the temperature is set the higher the energy consumption.
- Sort your food items: home.liebherr.com/food.
- All food stored in the appliance should be well wrapped and covered. This prevents frost buildup.
- Only take food out for as long as necessary so that it does not get too warm.
- Insertion of warm foods: first let the food cool down to room temperature.
- Defrost frozen food in the fridge
- For longer periods of absence, use HolidayMode (see HolidayMode) .

7 Use

7.1 Controls and displays

7.1.1 Status display

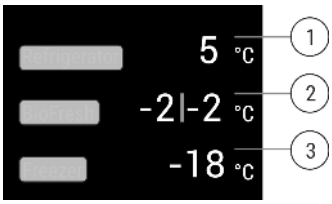

*Fig. 8 Status display shows the actual temperature.**

(1) Fridge compartment temperature display
(2) Temperature display BioFresh
(3) Freezer compartment temperature display (Fish & Seafood-safe)

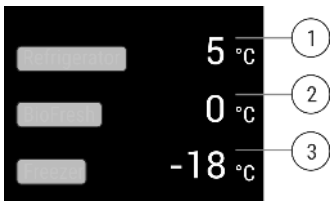

*Fig. 9 Status display shows the actual temperature.**

(1) Fridge compartment temperature display
(2) Temperature display BioFresh
(3) Freezer compartment temperature display

The status display shows the actual temperature and is the initial display. You can navigate from there to the functions and settings.

7.1.2 Display symbols

The display symbols provide information about the current appliance status.

Symbol	Appliance status
	Standby The appliance or temperature zone is turned off.
	Flashing number Appliance is working. Temperature flashes until the set temperature is reached.
	Flashing symbol Appliance is working. Setting is made.

7.2 Appliance functions

7.2.1 Notes on the appliance functions

The appliance functions are set at the factory so that your appliance is fully functional.

Before you alter, activate or deactivate the appliance functions, make sure that the following requirements are met:

- ❑ You have read and understood the descriptions of how the display works. (see 3 Functionality of the Touch & Swipe display)
- ❑ You have familiarized yourself with the operating and display elements of your appliance.

Switching appliance off and on

This function switches the entire appliance on and off.

* Depending on model and options

Switching off the appliance

If you switch off the appliance, the settings that were made before remain stored.

Make sure that the following requirements are fulfilled:

❑ Handling instructions (see 11 Decommissioning) have been completed.

Fig. 10

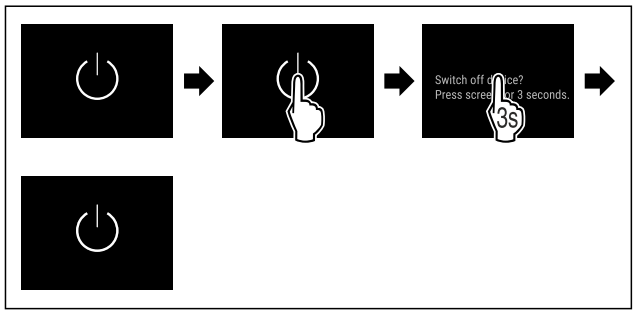

Fig. 11

▶ Carry out action steps according to the illustration.
▷ Appliance is switched off.
▷ Standby symbol appears in the display.
▷ Display turns black.

Switching on the appliance

If the display is in sleep mode:

▶ Briefly touch the display.

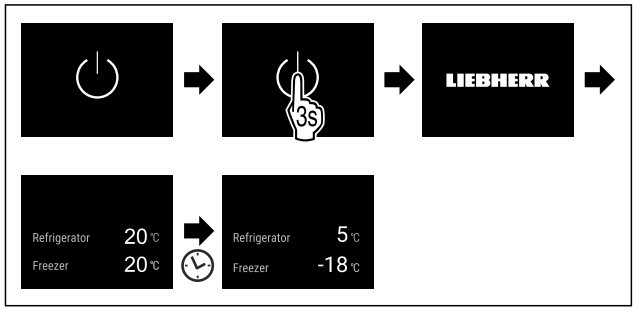

Fig. 12 Example illustration

▶ Carry out action steps according to the illustration.
If the appliance starts in demo mode:
▶ Deactivate demo mode. (see Deactivating demo mode)
▷ Appliance is switched on.
▷ Previously made settings are re-established.
▷ The appliance cools to the set target temperature.

Switching temperature zone off and on

You can switch temperature zones of the appliance off independently.

Switching the fridge compartment off

Make sure that the following requirements are fulfilled:

❑ Refrigerator compartment has been emptied.
❑ InfinitySpring water tank is empty.*

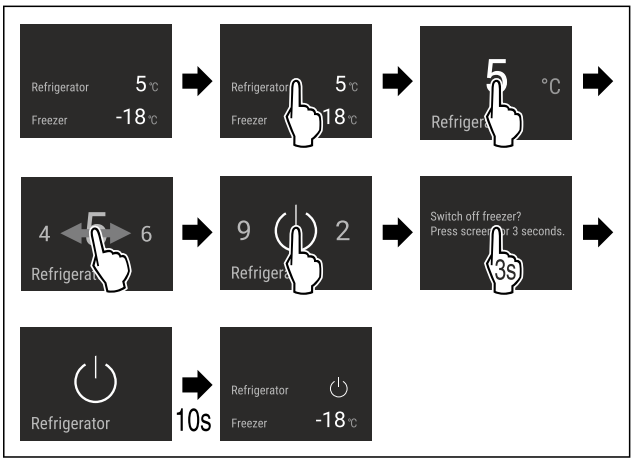

Fig. 13 Example illustration

▶ Carry out action steps according to the illustration.
▷ Refrigerator compartment is switched off.

Switching the freezer compartment off

Make sure that the following requirements are fulfilled:

❑ Freezer compartment has been emptied.
❑ IceMaker is deactivated.

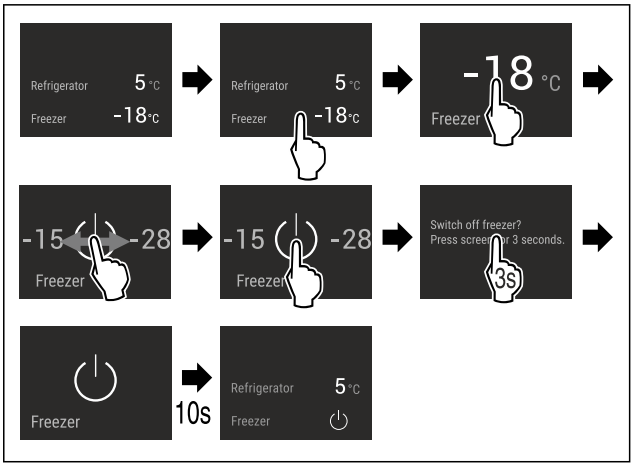

Fig. 14 Example illustration

▶ Carry out action steps according to the illustration.
▷ Freezer compartment is switched off.

Switching the fridge compartment on

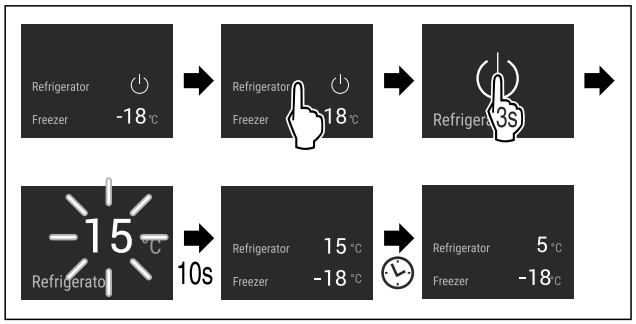

Fig. 15 Example illustration

▶ Carry out action steps according to the illustration.
▷ Refrigerator compartment is switched on.
▷ The appliance cools to the last set temperature.

Switching the freezer compartment on

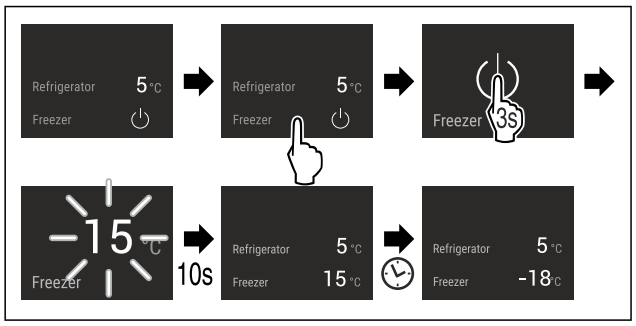

Fig. 16 Example illustration

▶ Carry out action steps according to the illustration.
▷ Freezer compartment is switched on.
▷ The appliance cools to the last set temperature.

WiFi

Use this function to connect your appliance to WiFi. You can then operate it via the SmartDevice app on a mobile device. You can also use this function to disconnect or reset the WiFi connection.

More information on the SmartDevice: (see 2.3 SmartDevice)

Note
The SmartDevice function is not available in the following countries: Russia, Belarus, Kazakhstan.

Establishing the WiFi connection for the first time

Make sure that the following requirements are fulfilled:

❑ You have installed the SmartDevice app (see apps.home.liebherr.com).
❑ Registration in the SmartDevice app is completed.

Fig. 17

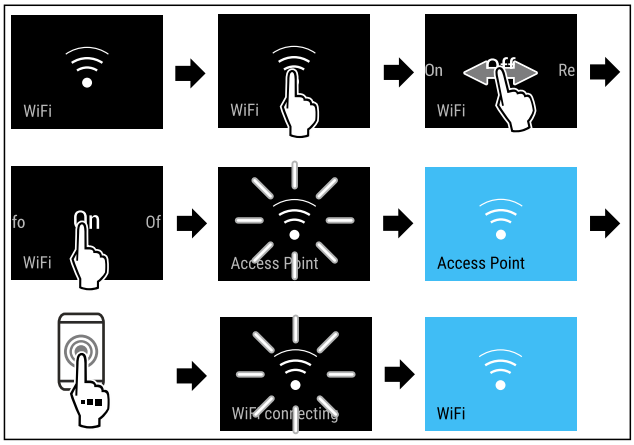

Fig. 18

▶ Carry out action steps according to the illustration.
▷ Connection is established.

Disconnecting from the WiFi

Fig. 19

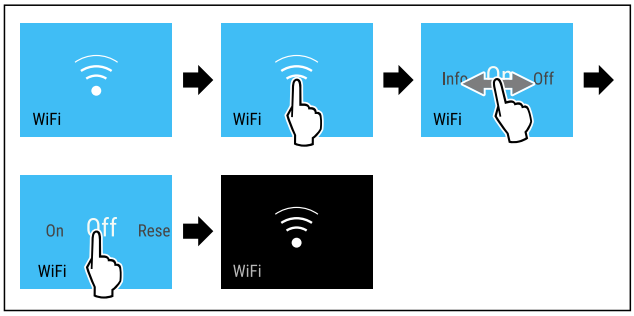

Fig. 20

▶ Carry out action steps according to the illustration.
▷ There is no connection.

Resetting the WiFi connection

Fig. 21

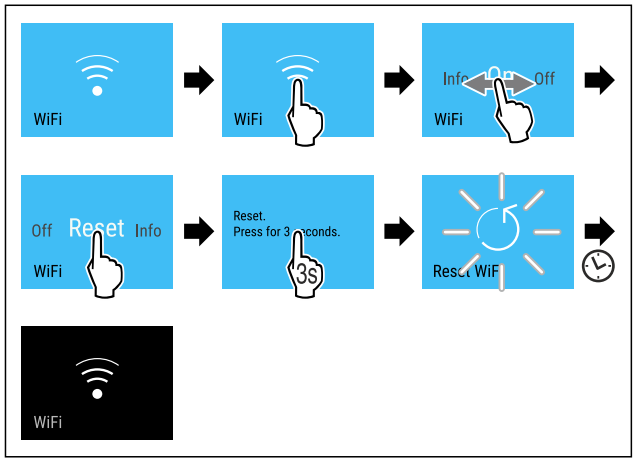

Fig. 22

▶ Carry out action steps according to the illustration.

▷ WiFi connection and other WiFi settings are reset to factory settings.

Showing information about the WiFi connection

Fig. 23

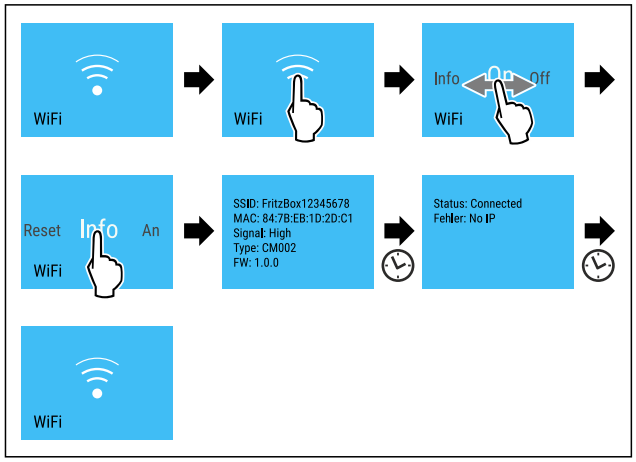

Fig. 24

▶ Carry out action steps according to the illustration.

5 °C Temperature

Use this function to set the temperature.

The temperature depends on the following factors:

- How often the door is opened
- How long the door is open
- The room temperature of the installation site
- Type, temperature and amount of food

Temperature zone	Factory-set temperature	Recommended setting
5 °C Fridge section	5 °C (41 °F)	4 °C (39 °F)
-18 °C Freezer section	-18 °C (-0 °F)	-18 °C (-0 °F)
0 °C BioFresh* Fruit & Vegetable safe* Meat & Dairy safe*	0 °C (32 °F)	B-Value (see BioFresh B-Value *)
-2 | 0 °C Fish & Seafood safe*	-2 °C (28 °F) | 0 °C (32 °F)*	(see 5.3.3 Fish & Seafood safe *) *

Setting the temperature in the fridge section

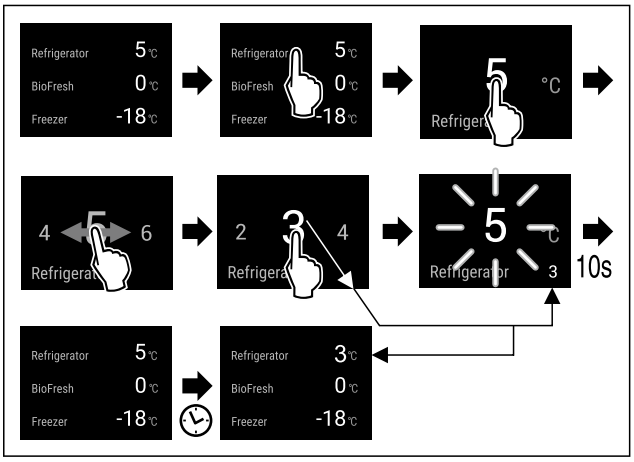

Fig. 25 Example illustration

▶ Carry out action steps according to the illustration.

▷ Temperature is set.

Setting the temperature in the freezer section

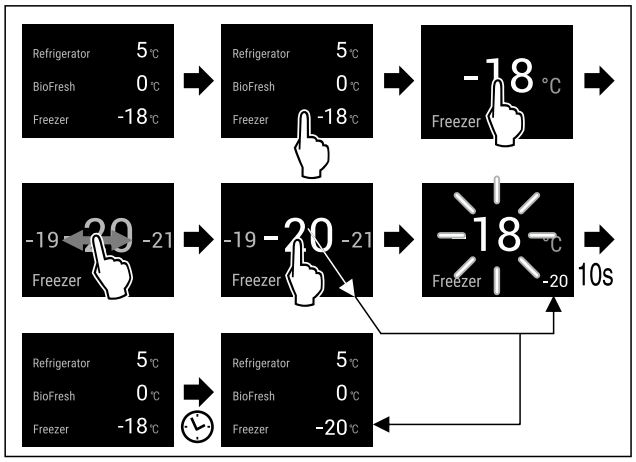

Fig. 26

▶ Carry out action steps according to the illustration.
▷ Temperature is set.

Setting the temperature in BioFresh

You set the temperature using the **BioFresh B-Value**. (see BioFresh B-Value *)

Setting the temperature in the Fish & Seafood safe*

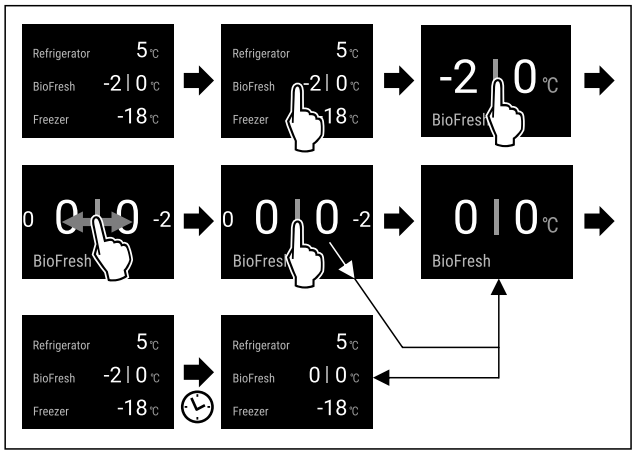

Fig. 27 Example illustration

▶ Carry out action steps according to the illustration.
▷ Temperature is set.

°C/°F Temperature unit

Use this function to set the temperature unit. You can set the temperature unit in either degrees Celsius or degrees Fahrenheit.

Setting the temperature unit

Fig. 28

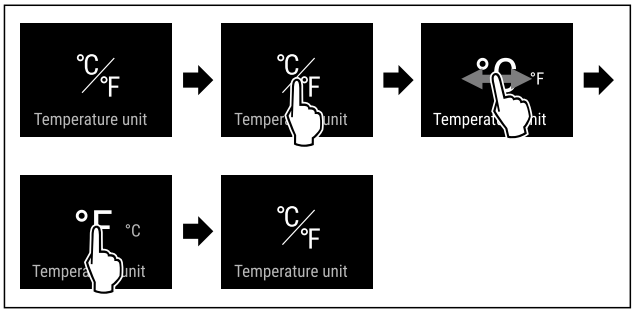

Fig. 30 Example illustration: Switching between degrees Celsius or degrees Fahrenheit.

▶ Carry out action steps according to the illustration.
▷ Temperature unit is set.

B5 BioFresh B-Value *

Use this function to set the BioFresh B-Value. Use the BioFresh B-Value to adjust BioFresh slightly warmer or colder if a higher or lower ambient temperature makes it necessary. Upon delivery, the BioFresh B-Value is set to the value B5. If you adjust the B-Value, please observe the following table:

Value	Description
B1	Lowest temperature
B1-B4	The temperature can drop to 0 °C (32 °F) which means foods could easily freeze.
B5	Pre-set temperature
B9	Highest temperature

Setting the BioFresh B-Value

Fig. 31

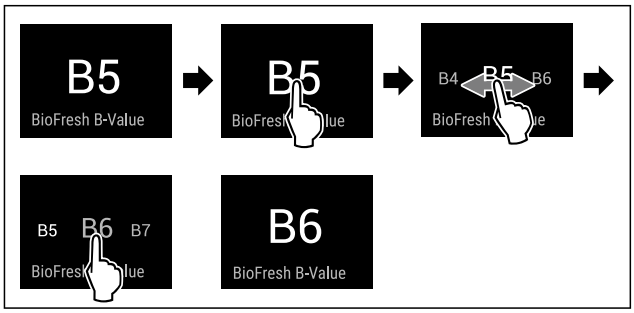

Fig. 33 Example illustration: Switching from B5 to B6.

▶ Carry out action steps according to the illustration.
▷ The BioFresh B-Value is set.
▷ Status display shows the target temperature.*

* Depending on model and options

D1 D-Value

The D-Value is preset for your appliance and must not be changed.

SuperCool

This function activates or deactivates SuperCool. If you activate SuperCool the appliance increases the cooling capacity. This allows you to achieve lower cooling temperatures. You can activate SuperCool if you want to quickly cool large volumes of food.

If the function is active, the appliance operates at a higher output. As a result, the operating noise of the appliance may be temporarily louder, while energy consumption increases.

Activating SuperCool

Time for activating the function:

- If you want to store fresh food in the fridge section: Activate the function when storing food.

Fig. 34

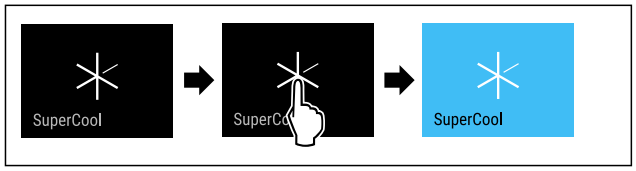

Fig. 35

▶ Carry out action steps according to the illustration.

-or-

▶ Activating with the SmartDevice app.

▷ SuperCool is activated.
▷ Temperature display turns blue.

Deactivating SuperCool

SuperCool is automatically deactivated after 18 hours. However, you can also manually deactivate SuperCool at any time:

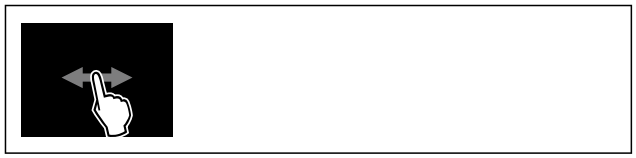

Fig. 36

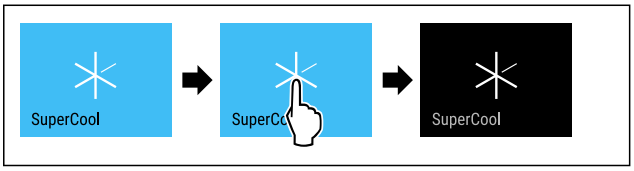

Fig. 37

▶ Carry out action steps according to the illustration.

-or-

▶ Deactivating with the SmartDevice app.

▷ SuperCool is deactivated.
▷ Appliance continues to run in normal operation.
▷ The appliance first cools to the set temperature.

VarioTemp

This function allows you to use the freezer compartment as an additional cooling zone. You can set the temperature from -2 °C (28 °F) to 14 °C (57 °F). If you activate this function, it may cause more noise. However, the appliance is still fully functional.

For storage of foodstuff in the freezer compartment with the VarioTemp function activated, Liebherr recommends:

Temperature range	Foodstuff
4 °C (39 °F) to 9 °C (46 °F)	Cooked foods, cheese, preserves
0 °C (32 °F)	Packaged fruit and vegetables
-2 °C (28 °F)	Fresh fish and seafood
10 °C (50 °F) to 14 °C (57 °F)	Cold-sensitive foodstuffs such as sweet potatoes, pumpkin or exotic fruits, food or drinks that should not be eaten too cold

Activating VarioTemp

Make sure that the following requirements are fulfilled:

❑ The IceMaker has been cleaned. (see 9.8.7 Cleaning the IceMaker)

WARNING

Danger of food poisoning!

▶ Do not re-freeze defrosted food.
▶ Use defrosted foodstuff as quickly as possible.

Fig. 38

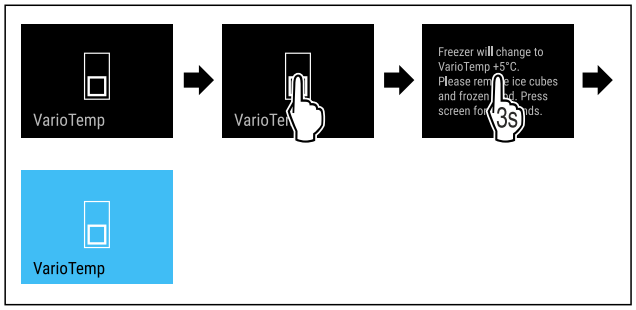

Fig. 39

▶ Carry out steps according to the illustration.
▷ VarioTemp is activated.
▷ IceMaker is deactivated.
▷ VarioTemp is set to the preselected value.
▷ The status display does not show the set temperature until it is reached.

Adjusting VarioTemp

Make sure that the following requirements are fulfilled:

❑ The VarioTemp has been activated. (see Activating VarioTemp)

WARNING

Danger of food poisoning!

▶ Do not re-freeze defrosted food.
▶ Use defrosted foodstuff as quickly as possible.

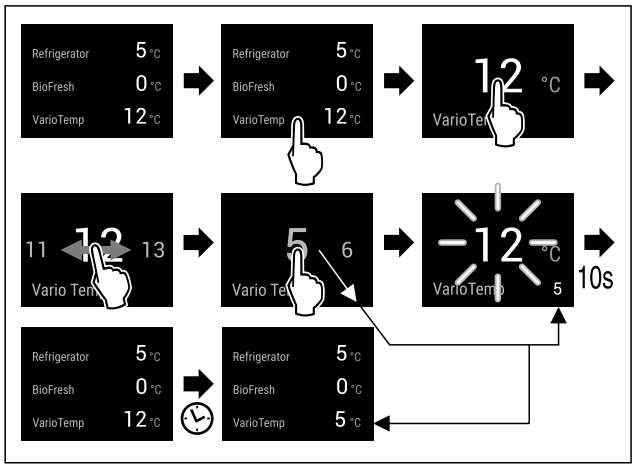

*Fig. 40 Example illustration: Change VarioTemp from 12 °C (54 °F) to 5 °C (41 °F) for a fridge-freezer combination with BioFresh.**

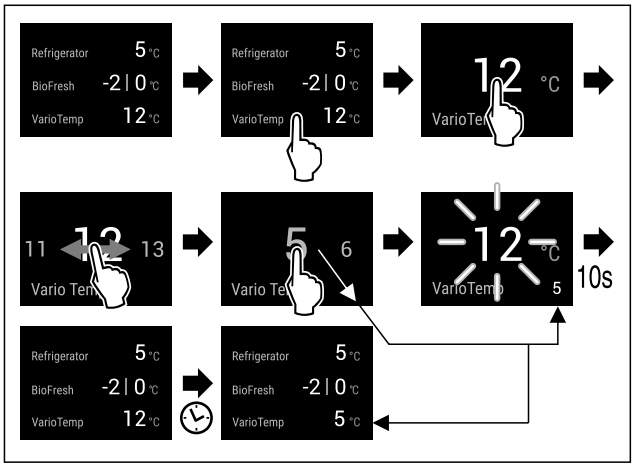

*Fig. 41 Example illustration: Change VarioTemp from 12 °C (54 °F) to 5 °C (41 °F) for a fridge-freezer combination with Fish & Seafood safe.**

▶ Carry out steps according to the illustration.
▷ VarioTemp is adjusted.
▷ The status display does not show the new set temperature until it is reached.

Deactivating VarioTemp

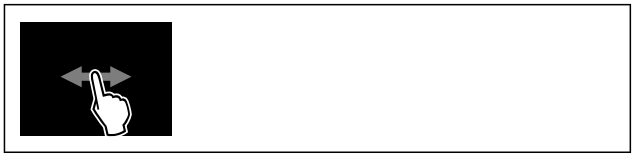

Fig. 42

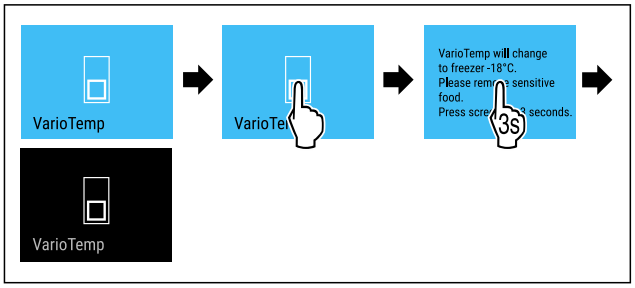

Fig. 43

▶ Carry out steps according to the illustration.
▷ VarioTemp is deactivated.
▷ The freezer compartment is cooled to the preset temperature.

SuperFrost

This function activates or deactivates SuperFrost. Activating SuperFrost the appliance increases the freezing capacity. This allows you to achieve lower freezer temperatures.

Application:

- Quickly freezing fresh food through to the core.

This ensures that the nutrition value, look, and taste of the food is preserved.
- Increasing cold reserves in stored frozen food before defrosting the appliance.

If the function is active, the appliance operates at a higher output. As a result, the operating noise of the appliance may be temporarily louder, while energy consumption increases.

Activating SuperFrost

Make sure that the following requirements are fulfilled:

❑ The freezing volume and time for SuperFrost activation are taken into account. (see Freezing food using SuperFrost)
❑ VarioTemp is deactivated. (see VarioTemp)

Fig. 44

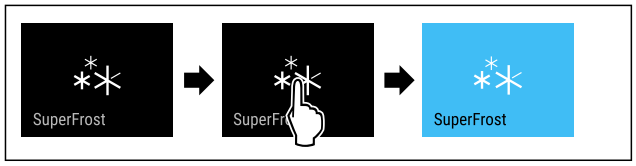

Fig. 45

▶ Carry out action steps according to the illustration.
-or-
▶ Activating with the SmartDevice app.

▷ SuperFrost is activated.
▷ Temperature display turns blue.

Deactivating SuperFrost

SuperFrost is automatically deactivated after 56 to 72 hours depending on the volume of the stored food. However, you can also manually deactivate SuperFrost at any time:

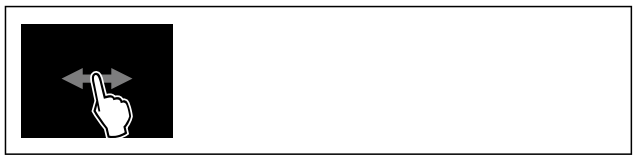

Fig. 46

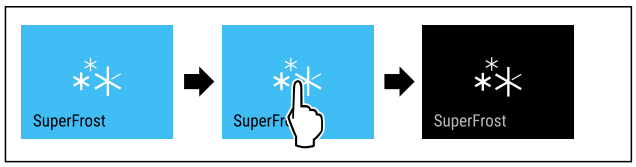

Fig. 47

▶ Carry out action steps according to the illustration.
-or-
▶ Deactivating with the SmartDevice app.

▷ SuperFrost is deactivated.
▷ Appliance continues to run in normal operation.

▷ The appliance first cools to the set temperature.

Start defrost cycle

Use this function to start the automatic defrost cycle manually if the defrost cycle does not start automatically in case of an error.

Starting the defrost cycle

Fig. 48

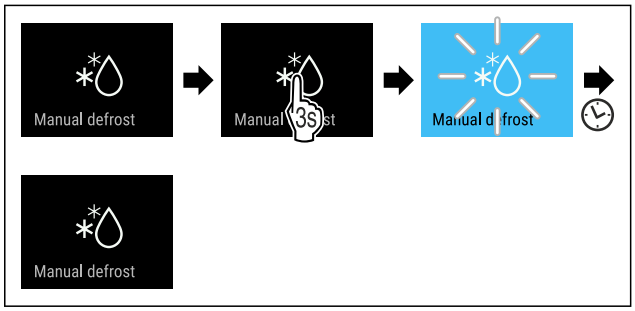

Fig. 49

▶ Carry out action steps according to the illustration.
▷ Defrost cycle has started: Symbol flashes until the defrost cycle is automatically completed.
▷ When the defrost cycle is completed: Appliance continues to run in normal operation.

Canceling the defrost cycle

The defrost cycle is automatically completed. However, you can also cancel the defrost cycle at any time during the defrosting:

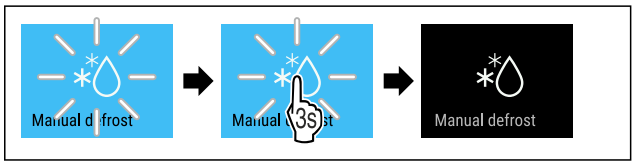

Fig. 50

▶ Carry out action steps according to the illustration.
▷ Defrost cycle is canceled.
▷ Appliance continues to run in normal operation.

PartyMode

This function activates and deactivates PartyMode. PartyMode activates different functions that are useful for a party.

PartyMode activates the following functions:
- SuperCool (see SuperCool)
- SuperFrost (see SuperFrost)
- IceMaker with MaxIce (see IceMaker / MaxIce)

You can set all listed functions individually and flexibly. By deactivating PartyMode all changes are discarded.

If the function is active, the appliance operates at a higher output. As a result, the operating noise of the appliance may be temporarily louder, while energy consumption increases.

Activating PartyMode

Make sure that the following requirements are fulfilled:

❑ IceMaker has been started for the first time. (see 4.3 Starting the IceMaker for the first time)

Fig. 51

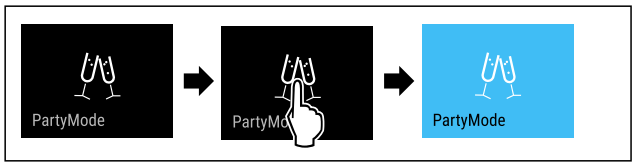

Fig. 52

▶ Carry out action steps according to the illustration.
▷ PartyMode and the corresponding functions are activated.
▷ Temperature display turns blue.
▷ The current temperature flashes until the target temperature is reached.

Deactivating PartyMode

PartyMode is automatically deactivated after 24 hours. However, you can also manually deactivate PartyMode at any time:

Fig. 53

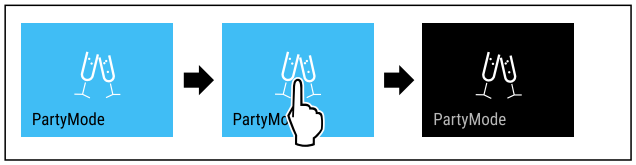

Fig. 54

▶ Carry out action steps according to the illustration.
▷ PartyMode is deactivated.
▷ The appliance first cools to the set temperature: The current temperature flashes until the target temperature is reached.

HolidayMode

Use this function to activate or deactivate HolidayMode. If you activate HolidayMode the fridge section is set to 15 °C (59 °F). This helps you save energy if you are away for a longer period of time and avoid bad smells and mold formation.

Appliance status with active HolidayMode
Fridge section cools to 15 °C (59 °F).
BioFresh cools down to 15 °C (59 °F).
The set temperature is maintained in the freezer section.
PartyMode is deactivated.
SuperCool is deactivated.

Activating HolidayMode

▶ Empty the fridge section completely.
▶ Empty BioFresh completely.

Fig. 55

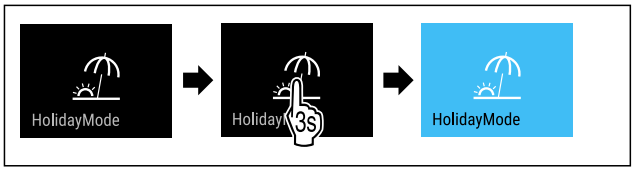

Fig. 56

▶ Carry out action steps according to the illustration.
▷ HolidayMode is activated.
▷ Temperature display turns blue and shows the HolidayMode symbol.

Deactivating HolidayMode

Fig. 57

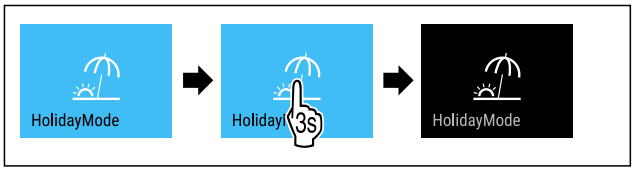

Fig. 58

▶ Carry out action steps according to the illustration.
▷ HolidayMode is deactivated.
▷ The appliance first cools to the set temperature.

SabbathMode

This function activates and deactivates SabbathMode. If you activate this function, some electronic functions are switched off. Your appliance thereby meets the religious requirements of Jewish holidays such as the Sabbath and complies with STAR-K Kosher certification.

Appliance status with active SabbathMode
The status display continuously shows SabbathMode.
All functions in the display except the **Deactivating SabbathMode function** are disabled.
Active functions remain active.
The display remains bright when you close the door.
The interior lighting is deactivated.
Memories are not listed. The set time interval is stopped.
Memories and warnings are not displayed.
There is no door alarm.
There is no temperature alarm.
The IceMaker is out of order.
The InfinitySpring is out of order.*
The defrost cycle operates only for the specified time without taking into account the appliance usage.
After a power failure, the device returns to SabbathMode.

Appliance status

Note

This appliance has certification from the “Institute for Science and Halacha”. (www.machonhalacha.co.il)

You can find a list of STAR-K-certified appliances at www.star-k.org/appliances.

Activating SabbathMode

WARNING

Danger of poisoning from spoiled food!

If you have SabbathMode activated and a power failure occurs, no message appears in the status display about the power failure. Once the power is restored, the appliance continues to operate in SabbathMode. The power failure may mean that food spoils and the consumption of this food could lead to food poisoning.

After a power failure:

▶ Do not consume food that has been frozen and thawed.

Fig. 59

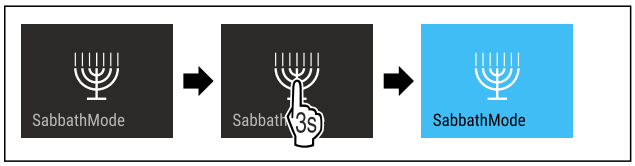

Fig. 60

▶ Carry out action steps according to the illustration.

▷ SabbathMode is activated.

▷ Status display continuously shows SabbathMode.

Deactivating SabbathMode

SabbathMode is automatically deactivated after 80 hours. However, you can also manually deactivate SabbathMode at any time:

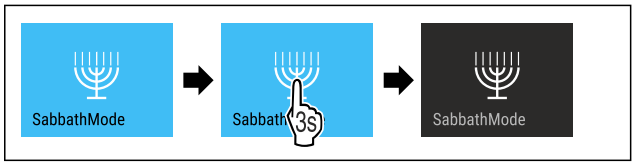

Fig. 61

▶ Carry out action steps according to the illustration.

▷ SabbathMode is deactivated.

EnergySaver

Use this function to activate or deactivate energy saving mode. If you activate energy saving mode, energy consumption drops and the temperature in the appliance increases. Food remains fresh, but shelf life is reduced.

Temperature zone	Recommended setting (see Setting the temperature in the fridge section)	Temperature while EnergySaver is active
5 °C Fridge section	4 °C (39 °F)	7 °C (45 °F)
-18 °C Freezer section	-18 °C (-0 °F)	-16 °C (3 °F)

Temperatures

Activating EnergySaver

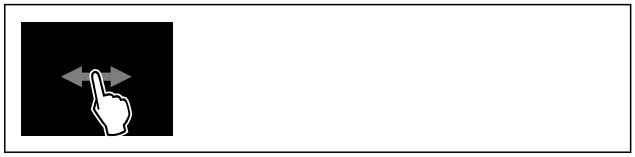

Fig. 62

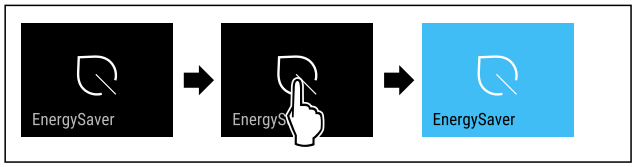

Fig. 63

▶ Carry out action steps according to the illustration.
▷ Energy saving mode is activated.

Deactivating EnergySaver

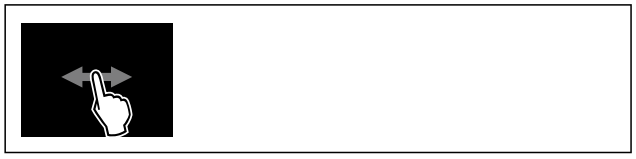

Fig. 64

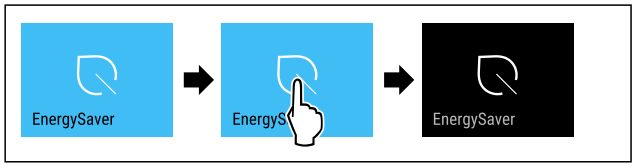

Fig. 65

▶ Carry out action steps according to the illustration.
▷ Energy saving mode is deactivated.

HydroBreeze*

This function activates or deactivates HydroBreeze. If you activate this function, HydroBreeze creates a fine, cold mist in the BioFresh safe. This increases the shelf life of unpackaged lettuce, vegetables, and fruit with a high intrinsic moisture content.

If you activate this function, HydroBreeze activates itself every 90 minutes for 4 seconds with the door closed. If you open the door, HydroBreeze activates itself depending on the setting:

Value	Description
1	HydroBreeze is active for 4 seconds while the door is open.
2	HydroBreeze is active for 6 seconds while the door is open.
3	HydroBreeze is active for 8 seconds while the door is open.
Deactivated (default setting)	HydroBreeze is deactivated.

HydroBreeze duration while the door is open

Activating HydroBreeze

Note

If you activate HydroBreeze but are not storing food in the drawer, condensate forms on the floor of the drawer.

▶ Only activate HydroBreeze if you store food in the drawer.

Make sure that the following requirements are fulfilled:

❑ HydroBreeze is cleaned. (see 9.8.6 Cleaning the HydroBreeze*)
❑ Water tank is filled. (see 8.9.1 Fill the water tank)

You activate HydroBreeze by selecting a value for the HydroBreeze duration:

Fig. 66

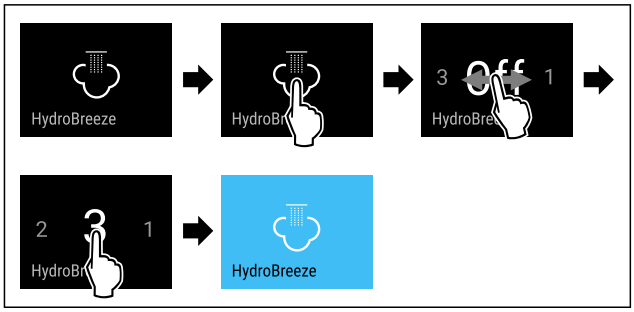

Fig. 67 Example illustration: HydroBreeze, activate with value 3.

▶ Carry out action steps according to the illustration.
▷ HydroBreeze is activated.

Deactivating HydroBreeze

Fig. 68

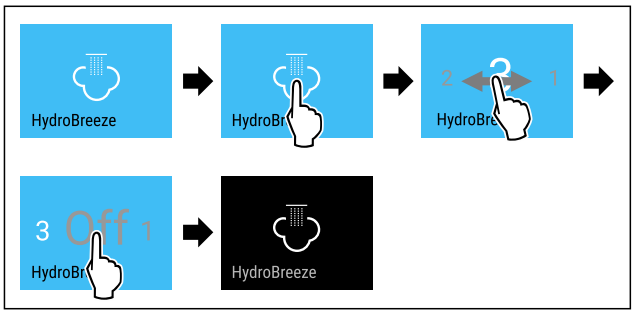

Fig. 69

▶ Carry out action steps according to the illustration.
▷ HydroBreeze is deactivated.

IceMaker / MaxIce

This function activates and deactivates the IceMaker that produces ice cubes. Use the MaxIce function to increase the amount of ice cubes that the IceMaker produces. MaxIce is automatically deactivated after 48 hours. However, you can also manually deactivate MaxIce at any time: (see Deactivating MaxIce)

More information on the number of ice cubes:	(see 10.1 Technical specifications)
More information on the IceMaker water inflow:	(see IceMaker water inflow)
More information on cleaning the lines of the IceMaker:	(see TubeClean)

If the function is active, the appliance operates at a higher output. As a result, the operating noise of the appliance may be temporarily louder, while energy consumption increases.

If you activate the VarioTemp function, the IceMaker is automatically deactivated. (see VarioTemp)

Activating IceMaker

Make sure that the following requirements are fulfilled:

- ❑ The water supply is established at the fixed water connection. See Assembly Manual.
- ❑ IceMaker is put into operation. (see 8.11 IceMaker)

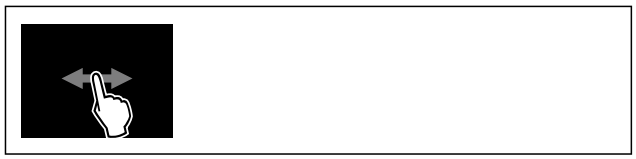

Fig. 70

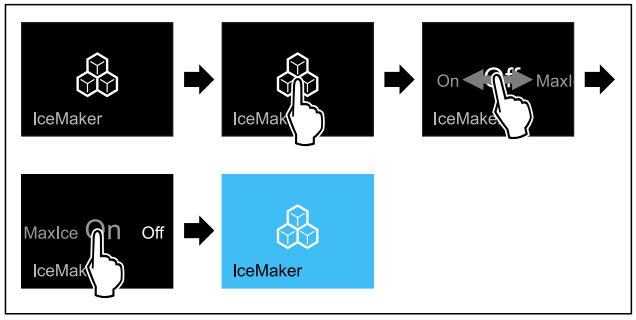

Fig. 71

▶ Carry out action steps according to the illustration.

-or-

▶ Activate with the SmartDevice app.

▷ IceMaker is activated. It can take up to 24 hours for the IceMaker to produce the first ice cubes.

Activating the IceMaker with MaxIce

If you have not activated the IceMaker function before, make sure that the following requirements are met:

- ❑ The water supply is established at the fixed water connection. See Assembly Manual.
- ❑ IceMaker is put into operation. (see 8.11 IceMaker)

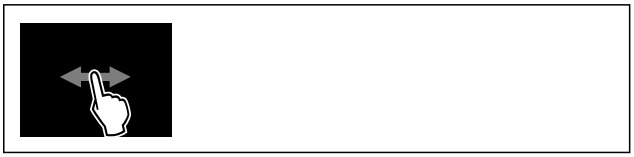

Fig. 72

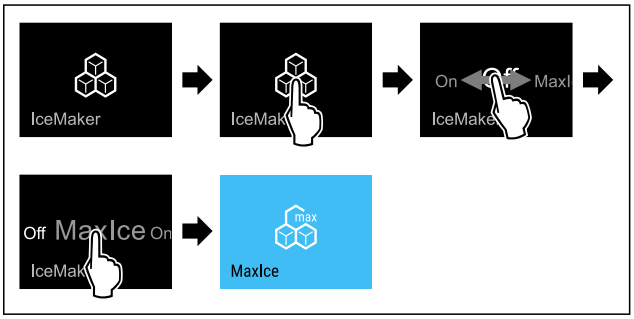

Fig. 73

▶ Carry out action steps according to the illustration.

-or-

▶ Activate with the SmartDevice app.

▷ The IceMaker is activated with MaxIce.

Changing between the IceMaker and MaxIce

If you have activated IceMaker and would like to change to MaxIce:

Fig. 74

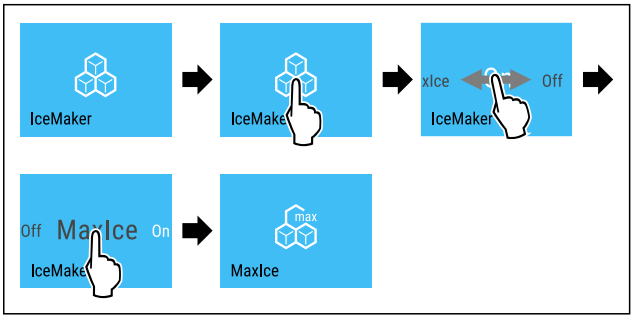

Fig. 75

▶ Carry out action steps according to the illustration.

▷ The IceMaker is activated with MaxIce.

If you have activated MaxIce and would like to change to IceMaker:

Fig. 76

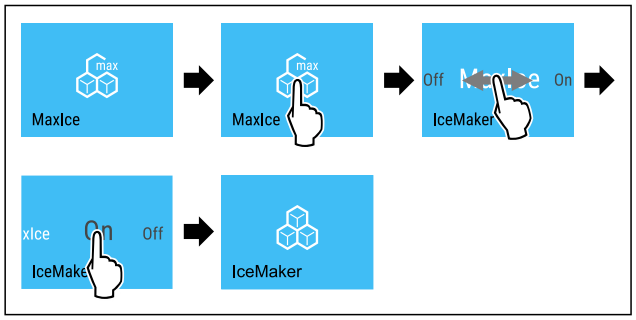

Fig. 77

▶ Carry out action steps according to the illustration.
▷ IceMaker is activated.
▷ MaxIce is deactivated.

Deactivating IceMaker and MaxIce

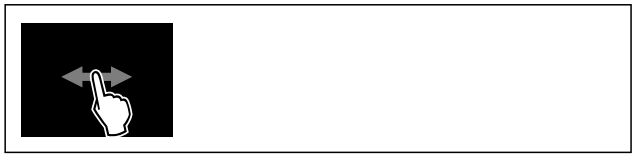

Fig. 78

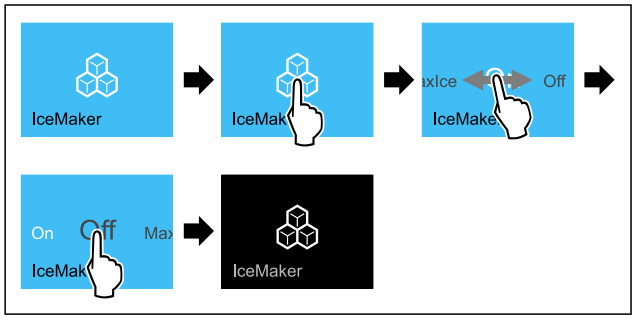

Fig. 79 Example illustration of the active IceMaker function

▶ Carry out action steps according to the illustration.

-or-

▶ Deactivate with the SmartDevice app.

▷ IceMaker and MaxIce are deactivated.
▷ If ice cubes are currently being made, the system completes the process.
▷ The IceMaker goes off automatically.

Deactivating MaxIce

▶ Activate IceMaker. (see Activating IceMaker)
▷ MaxIce is deactivated.
▷ IceMaker is activated.
▷ Deactivating IceMaker and MaxIce: (see Deactivating IceMaker and MaxIce)

5 IceMaker water inflow

Set the water inflow with this function. The water inflow regulates the water inflow volume. You can adjust the water inflow if it does not match the water pressure and the size of the ice cubes dispensed.

Upon delivery, the water inflow is set to value 4. You can select a value of between 1 (smallest inflow volume) and 8 (largest inflow volume).

Setting the water inflow

Make sure that the following requirements are fulfilled:

❑ IceMaker has been started for the first time. (see 4.3 Starting the IceMaker for the first time)
❑ IceMaker is activated. (see IceMaker / MaxIce)

Fig. 80

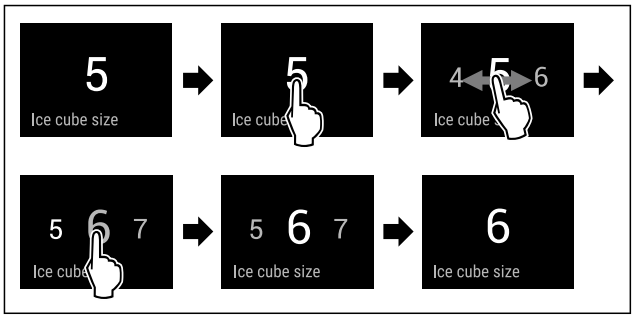

Fig. 81 Example illustration: Switching from value 5 to value 6.

▶ Carry out action steps according to the illustration.
▷ Water inflow is set.

TubeClean

This function activates or deactivates TubeClean. Activating TubeClean cleans the IceMaker lines.

Activating TubeClean

Make sure that the following requirements are fulfilled:

❑ IceMaker cleaning is prepared. (see 9.8.7 Cleaning the IceMaker)
❑ Empty container with a capacity of 1.5 l (1.59 qt) and with a maximum height of 10 cm (3 15/16 in) is ready.

▶ Place the container into the drawer below the IceMaker.

Fig. 82

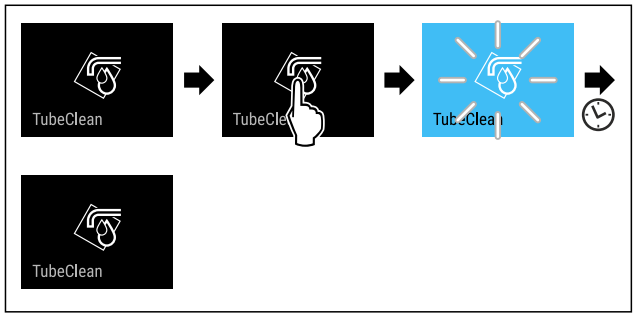

Fig. 83

▶ Carry out action steps according to the illustration.
▷ TubeClean is activated.
▷ Cleaning process has started: Symbol flashes until the cleaning process is automatically completed after 60 minutes.
▷ When the cleaning process is completed: Appliance continues to run in normal operation.

Deactivating TubeClean

TubeClean is automatically completed after 60 minutes. However, you can also deactivate TubeClean at any time during the cleaning process:

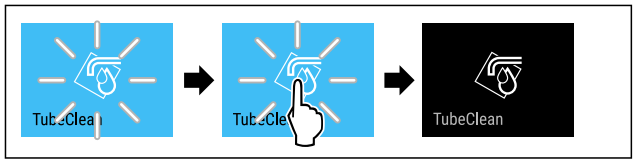

Fig. 84

▶ Carry out action steps according to the illustration.
▷ TubeClean is deactivated: Cleaning process is canceled.
▷ Appliance continues to run in normal operation.

CleaningMode

This function activates and deactivates CleaningMode. CleaningMode enables you to comfortably clean the appliance.

This setting relates to the fridge compartment.

Application:

- Clean the fridge compartment. (see 9.8 Cleaning the appliance)
- Clean the InfinitySpring. (see 9.8.5 Cleaning the InfinitySpring *) *

Appliance status with active CleaningMode
The status display continuously shows CleaningMode.
The fridge section is switched off.
The interior lighting is activated.
Reminders and warnings are not displayed. No signal tone is sounded.
The InfinitySpring is out of order.*

Appliance status

Activating CleaningMode

Fig. 85

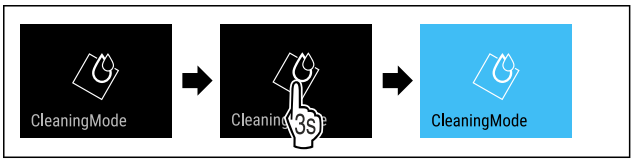

Fig. 86

▶ Carry out action steps according to the illustration.
▷ CleaningMode is activated.
▷ Status display continuously shows CleaningMode.

Deactivating CleaningMode

CleaningMode is automatically deactivated after 60 minutes. However, you can also manually deactivate CleaningMode at any time:

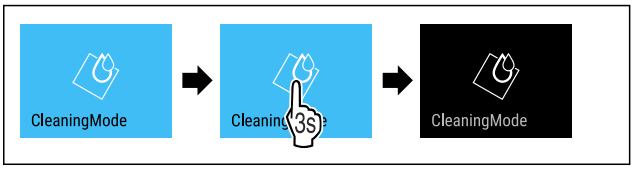

Fig. 87

▶ Carry out action steps according to the illustration.
▷ CleaningMode is deactivated.
▷ The appliance first cools to the set temperature.

Display Brightness

Use this function to set the brightness of the display gradually.

You can set the following brightness levels:

- 40 %
- 60 %
- 80 %
- 100% (default setting)

Setting the brightness

Fig. 88

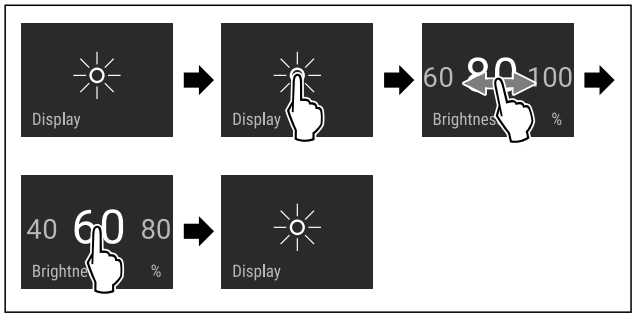

Fig. 89 Example illustration: Switching from 80 % to 60 %.

▶ Carry out action steps according to the illustration.
▷ Brightness is set.

Door alarm

Use this function to activate or deactivate the door alarm. The door alarm sounds if the door is open for too long. The door alarm is activated upon delivery. You can set how long to door can remain open until the door alarm sounds.

You can set the following values:

- 1 minute
- 2 minutes
- 3 minutes
- Off

Setting the door alarm

Fig. 90

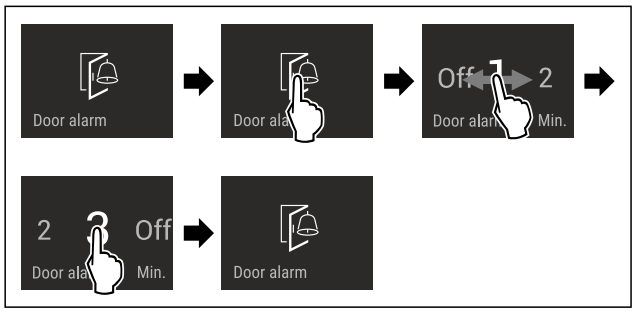

Fig. 91 Example illustration: Changing the door alarm from 1 minute to 3 minutes.

▶ Carry out action steps according to the illustration.
▷ Door alarm is set.

Deactivating door alarm

Fig. 93

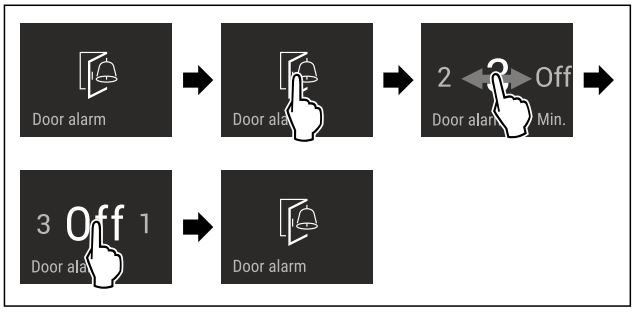

Fig. 94

▶ Carry out action steps according to the illustration.
▷ Door alarm is deactivated.

Input lock

This function activates and deactivates the input lock. The input lock prevents the appliance from being operated accidentally, e. g. by children.

Application:

- Prevent unintentional changes of functions.
- Prevent switching off of the appliance.
- Prevent unintentional temperature setting.

Activating the input lock

If you activate the input lock, you can continue to navigate in the menus, however you cannot select or modify other functions.

Fig. 95

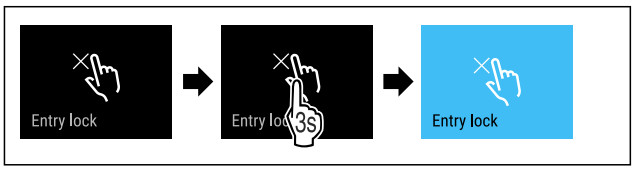

Fig. 96

▶ Carry out action steps according to the illustration.
▷ Input lock is activated.

Deactivating the input lock

Fig. 97

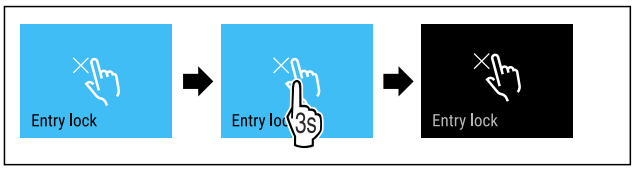

Fig. 98

▶ Carry out action steps according to the illustration.

*** Depending on model and options**

▷ Input lock is deactivated.

Language

Use this function to set the display language.

You can set the following languages:

- German
- English
- French
- Spanish
- Italian
- Dutch
- Czech
- Polish
- Portuguese
- Bulgarian
- Russian
- Chinese

Setting the language

Fig. 99

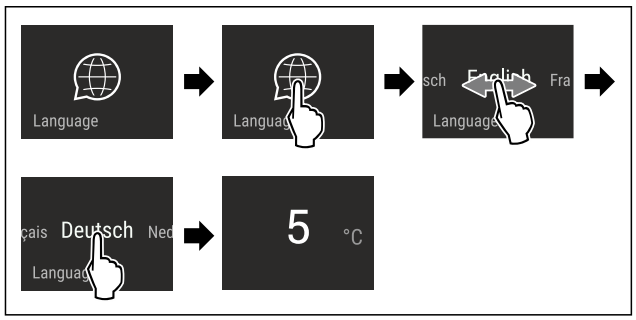

Fig. 100 Example illustration depending on the language and temperature

▶ Carry out action steps according to the illustration.
▷ Language is set.
▷ Display jumps back to the status display.

Appliance information

Use this function to display the model name, index, serial number and service number of your appliance. You will need the appliance information when you contact customer service. (see 10.4 Customer Service)

You also use this function to open the expanded menu. (see 3 Functionality of the Touch & Swipe display)

Display appliance information

Fig. 101

Fig. 102

▶ Carry out action steps according to the illustration.
▷ Display shows the appliance information.

Software

Use this function to display the software version of your appliance.

Display software version

Fig. 103

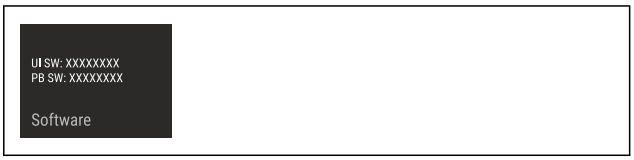

Fig. 104

▶ Carry out action steps according to the illustration.
▷ Display indicates the software version.

Reminder

Use this function to activate or deactivate reminder. This function is activated upon delivery.

The following reminders will then appear if the function is activated:

- Replace water filter (see Replace water filter*) *
- Replace the FreshAir activated charcoal filter (see Replace FreshAir activated charcoal filter)

Activating reminder

Fig. 105

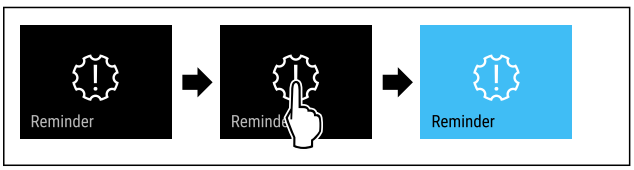

Fig. 106

▶ Carry out action steps according to the illustration.
▷ Reminder is activated.

Deactivating reminder

Fig. 107

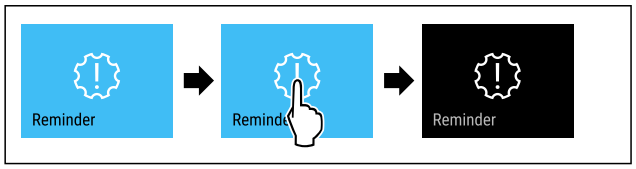

Fig. 108

▶ Carry out action steps according to the illustration.
▷ Reminder is deactivated.

Demo mode

Demo mode is a special feature for dealers who want to demonstrate appliance features. If you activate demo mode, all refrigeration functions are deactivated.

If you switch on your appliance and “Demo” appears in the status display, then demo mode is already activated.

If you activate and then deactivate demo mode, the appliance will be reset to factory defaults. (see Resetting to factory settings)

Activating demo mode

Fig. 109

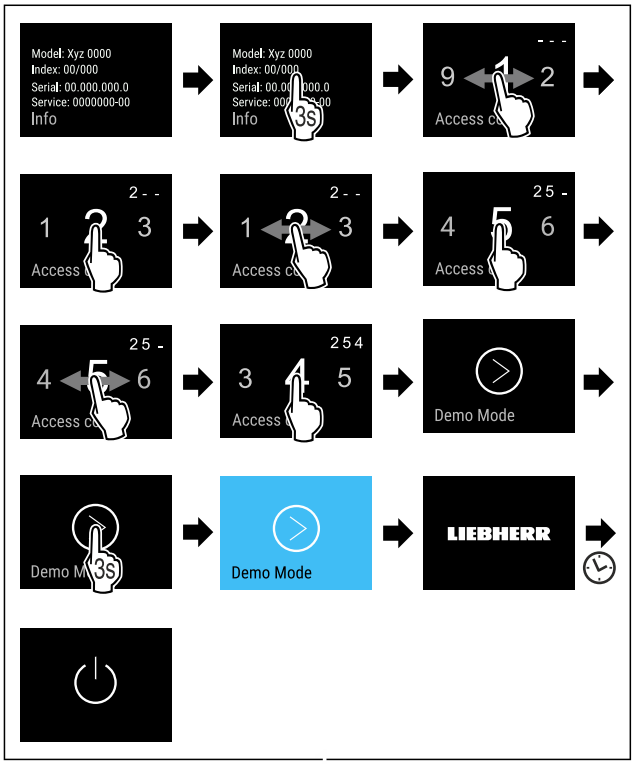

Fig. 110

▶ Carry out action steps according to the illustration.
▷ Demo mode is activated.
▷ Appliance is switched off.
▶ Switch on the appliance. (see 4.1 Switching on appliance (first use))
▷ “DEMO” appears in the status display.

Deactivating demo mode

Fig. 111

* Depending on model and options

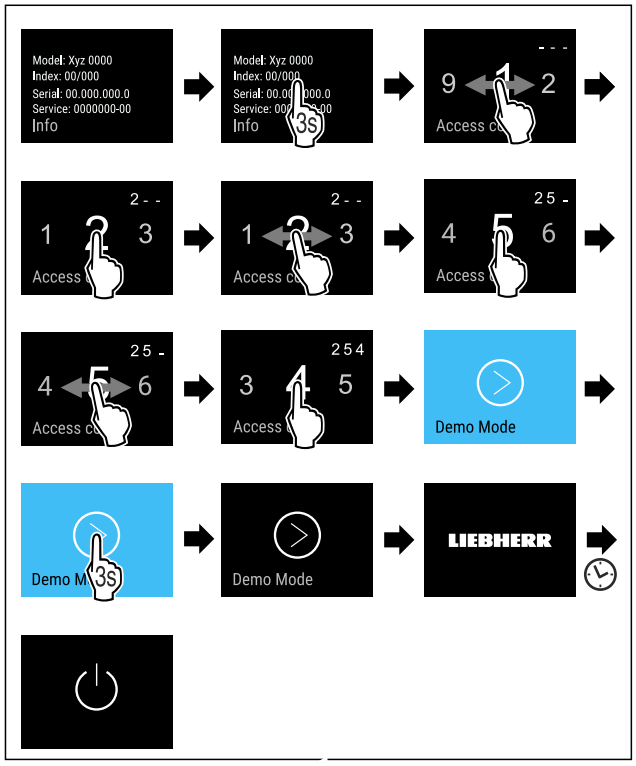

Fig. 112

▶ Carry out action steps according to the illustration.
▷ Demo mode is deactivated.
▷ Appliance is switched off.
▶ Switch on the appliance. (see 4.1 Switching on appliance (first use))
▷ Appliance is reset to factory settings.

Resetting to factory settings

Use this function to reset all settings to factory settings. All settings you have made so far are reset to their original settings.

Performing a reset

Fig. 113

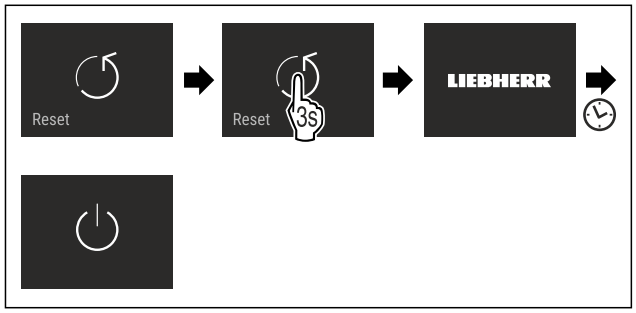

Fig. 114

▶ Carry out action steps according to the illustration.
▷ Appliance is reset.
▷ Appliance is switched off.
▶ Restart the appliance. (see 4.1 Switching on appliance (first use))

7.3 Messages

There are two categories of messages:

Category	Meaning
Warning	Warnings are displayed if there is a door alarm or a malfunction. You can easily end warnings yourself. For any major malfunction, you must contact Customer Service. (see 10.4 Customer Service)
Reminder	Reminders remind you of general processes. You can perform these processes and end the message doing so.

7.3.1 Overview of warnings

The appliance's behavior in the event of a warning:
- Warning appears in the display in red.
- Alarm sounds in increasing volume.
- For some warnings the interior lighting pulses.

Message	Cause	Ending the message
Close the door. **Door alarm**	The message appears if the door is open for too long.	Carry out action steps (see Door alarm) .
Power failure **Power failure alarm**	The message appears if the freezing temperature increases due to a power outage.	
Temperature alarm **Temperature alarm**	The message appears if the freezing temperature does not correspond to the set temperature.	Carry out action steps (see Temperature alarm) .
Error **Error**	This message appears if there is an appliance error. An appliance module indicates an error.	Carry out action steps (see Error) .

Message	Cause	Ending the message
WLAN error	This message appears if the appliance could not be connected to WLAN. (see Establishing the WiFi connection for the first time) This message only appears the first time the appliance is set up.	Carry out action steps (see WLAN error) .

7.3.2 Ending warnings

Door alarm

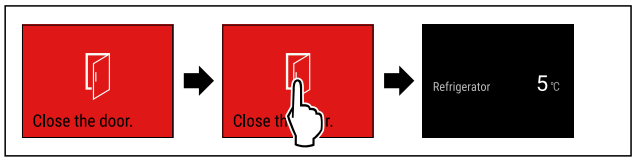

Fig. 115 Example illustration

▶ Carry out action steps according to the illustration.

-or-

▶ Close the door.

▷ Display skips to status display.

You can set how long to door may remain open until the door alarm sounds. (see Setting the door alarm)

Power failure alarm

Once the power failure has ended, the appliance automatically cools to the target temperature set earlier without you having to confirm the message. But you must confirm it in order for the message to disappear on the display.

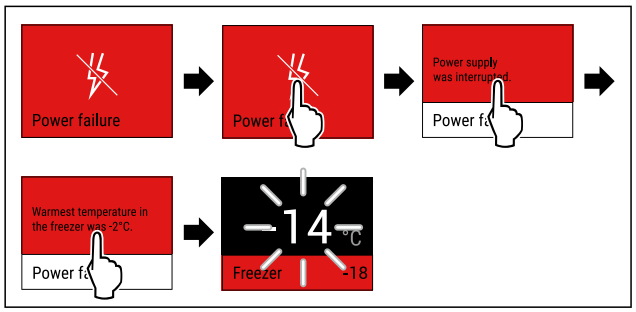

Fig. 116 Example illustration

▶ Briefly touch the display.
▷ Display shows information about the warning.
▶ Briefly touch the display.
▷ The warmest freezing temperature is displayed.
▷ If the freezing temperature was below -9 °C (16 °F): Food can still be eaten.
If the freezing temperature exceeded -9 °C (16 °F):
▶ Check the food.
▶ Briefly touch the display.
▷ Display skips to status display: The current temperature and target temperature are displayed.

Temperature alarm

Causes for the temperature differences may be:

- You have put in warm, fresh food.
- Too much warm room air has flowed in during the rearrangement and removal of food.
- The power has been out for a longer period of time.
- The appliance is defective.

▶ Remedy the cause.
▷ The appliance cools to the target temperature set earlier:

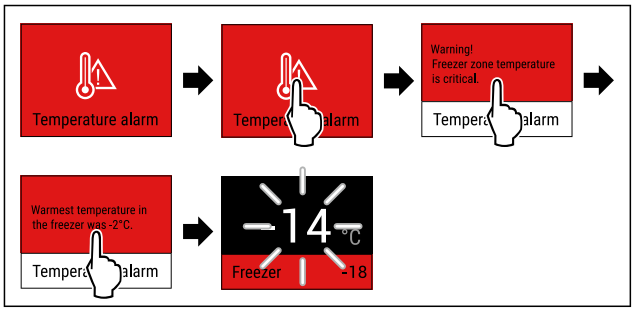

Fig. 117 Example illustration

▶ Briefly touch the display.
▷ Display shows information about the warning.
▶ Briefly touch the display.
▷ The warmest freezing temperature is displayed.
▷ If the freezing temperature was below -9 °C (16 °F): Food can still be eaten.
If the freezing temperature exceeded -9 °C (16 °F):
▶ Check the food.
▶ Briefly touch the display.
▷ Display skips to status display: The current temperature and target temperature are displayed.

Error

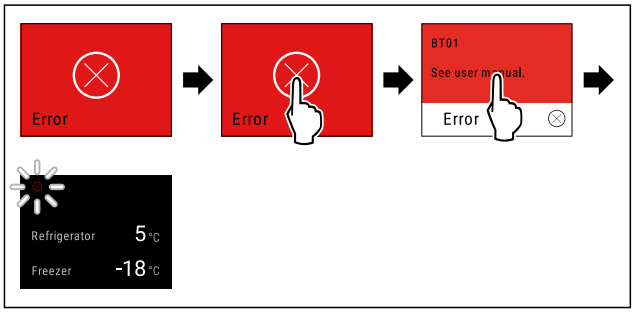

Fig. 118 Example illustration

▶ Briefly touch the display.
▷ Error code is displayed.
▶ Make a note of the error code.
▶ Briefly touch the display.
▷ Display skips to status display.
▶ Contact Customer Service. (see 10.4 Customer Service)

WLAN error

▶ Check the WLAN connection.
▶ Connect the appliance to the WLAN again. (see WiFi)

7.3.3 Overview of reminders

The appliance's behavior in the event of a reminders:

- Reminder appears in the display in yellow.
- Alarm tone sounds.
- For some reminders the interior lighting pulses.

You can deactivate the following reminders (see Deactivating reminder) :

- Replace FreshAir activated charcoal filter

Message	Cause	Ending the message
Check water connection	This message appears if the IceMaker is active, but the IceMaker is no longer being supplied with water by a permanent water connection.	Carry out action steps (see Check water connection) .
Push in the IceMaker drawer	This message appears if the IceMaker is active, but the IceMaker drawer is open.	Carry out action steps (see Push in the IceMaker drawer) .
* **Replace water filter***	This message appears if you have to replace the water filter.*	Carry out action steps (see Replace water filter*) .*
Replace FreshAir activated charcoal filter	This message appears if you have to replace the FreshAir activated charcoal filter.	Carry out action steps (see Replace FreshAir activated charcoal filter) .

7.3.4 Ending reminders

Check water connection

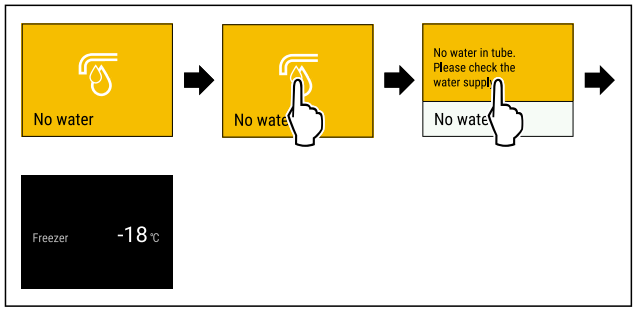

Fig. 119 Example illustration

▶ Briefly touch the display

▷ Display shows information about the reminder.

▶ Briefly touch the display

▶ Check the water connection.

-or-

▶ Deactivate IceMaker. (see Deactivating IceMaker and MaxIce)

If the water connection has been checked and IceMaker is activated:

▶ Clean the IceMaker. (see 9.8.7 Cleaning the IceMaker)

▷ IceMaker is producing ice cubes.

Push in the IceMaker drawer

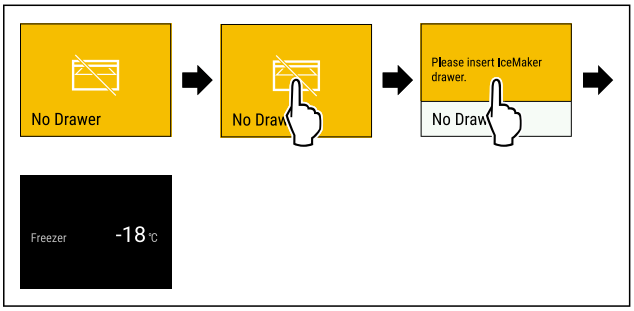

Fig. 120 Example illustration

▶ Briefly touch the display.

▷ Display shows information about the reminder.

▶ Briefly touch the display.

▶ Push in the IceMaker drawer.

-or-

▶ Deactivate IceMaker. (see IceMaker / MaxIce)

▷ If the IceMaker drawer is pushed in and IceMaker is active: IceMaker is producing ice cubes.

Replace water filter*

Liebherr recommends: Replace the water filter every 6 months.

Note

The water filter can be purchased from the Liebherr Service Center. The address for your respective country can be found on the back of the instructions.

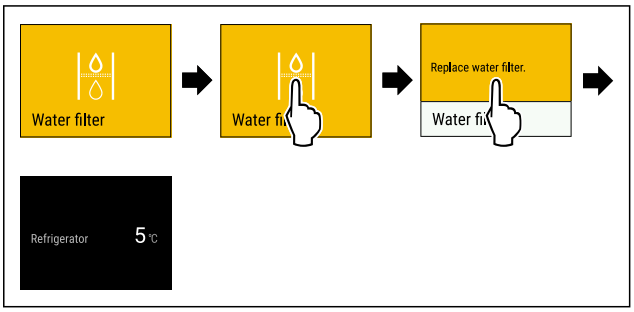

Fig. 121 Example illustration

▶ Briefly touch the display.

▷ Display shows information about the reminder.

▶ Briefly touch the display.

▶ Replace water filter. (see 9.3 Water filter*)

▷ Water filter ensures optimum water quality.

▷ Reminder appears again after 6 months.

If you no longer want to keep this reminder, you can deactivate the reminder. (see Deactivating reminder)

Replace FreshAir activated charcoal filter

Liebherr recommends: Replace the FreshAir activated charcoal filter every 6 months.

Note
FreshAir activated charcoal filters can be purchased from the Liebherr Service Center. The address for your respective country can be found on the back of the instructions.

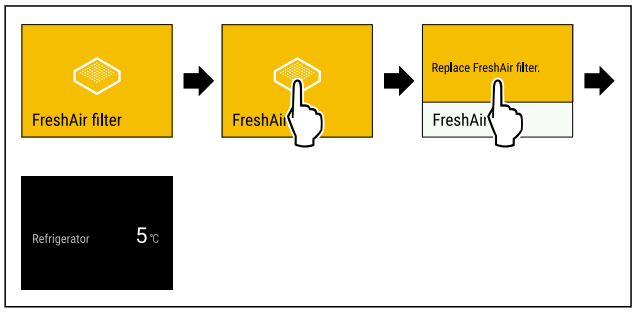

Fig. 122 Example illustration

▶ Briefly touch the display.
▷ Display shows information about the reminder.
▶ Briefly touch the display.
▶ Replace activated charcoal filter. (see 9.1 FreshAir carbon filter)
▷ The activated charcoal filter ensures optimum air quality in the refrigerator.
▷ Reminder appears again after 6 months.

If you no longer want to keep this reminder, you can deactivate the reminder. (see Deactivating reminder)

8 Equipment

8.1 Door racks

Door racks are suitable for storing beverages and food. You can move door racks for use as individually needed and disassemble them for cleaning. However, Liebherr recommends using the door racks in the position they are in when delivered from the plant.

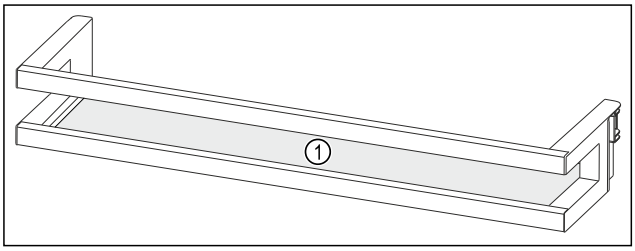

Fig. 123 Example illustration of the door racks
(1) Shelf

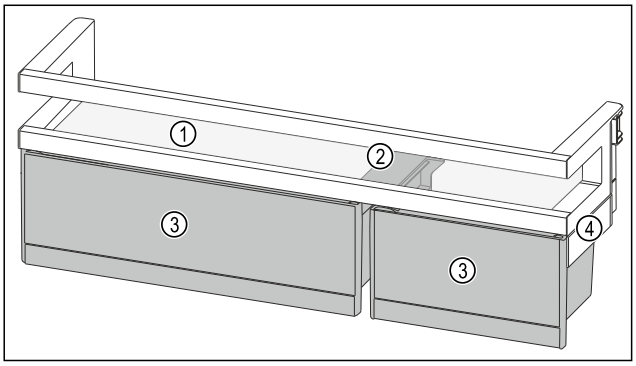

Fig. 124 Example illustration of door racks with VarioBoxes
(1) Shelf
(2) Retaining part for VarioBoxes
(3) VarioBoxes
(4) Side section

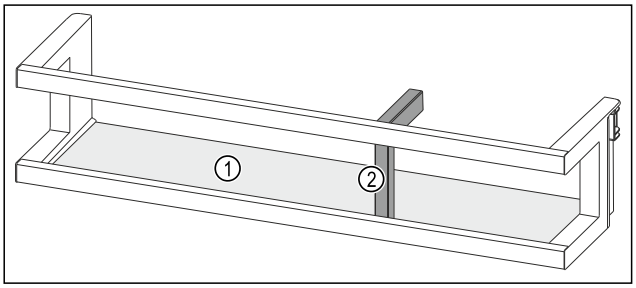

Fig. 125 Example illustration of the door racks with bottle holder
(1) Shelf
(2) Bottle holder

The following table shows examples of what you can store in each door rack. Here, make sure that you do not exceed the maximum loading weight for the door.

Door racks	Food
Door racks (see Fig. 123)	Butter, cheese, canned food, tubes
Door racks with bottle holder (see Fig. 125)	Bottles Use the movable bottle holder to secure the bottles in the door rack.
Door racks with Vario-Boxes (see Fig. 124)	small food items

8.1.1 Removing the VarioBoxes

You can use either one or both VarioBoxes. If you want to place especially high bottles in the door rack below the door rack with VarioBoxes, you can remove one or both VarioBoxes.

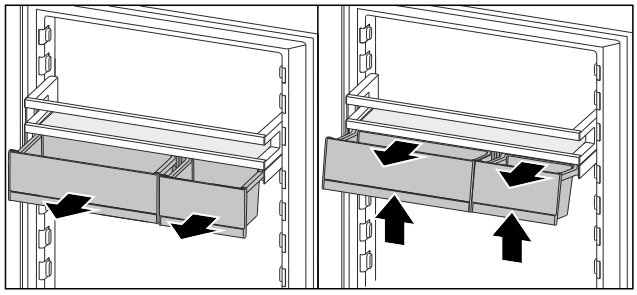

Fig. 126

▶ Pull out the VarioBoxes as far as they go.
▶ Lift VarioBoxes at the front.
▶ Take the VarioBoxes out to the front.

8.1.2 Removing the door rack

Make sure that the following requirements are fulfilled:

❑ VarioBoxes are removed. (see 8.1.1 Removing the VarioBoxes)

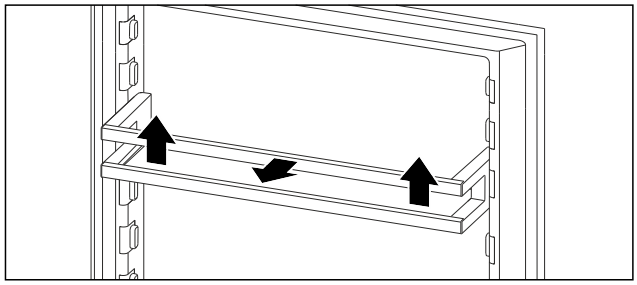

Fig. 127 Example illustration

▶ Move the door rack up.
▶ Move the door rack to the front.

8.1.3 Inserting the door rack

Make sure that the following requirements are fulfilled:

❑ VarioBoxes are removed. (see 8.1.1 Removing the VarioBoxes)

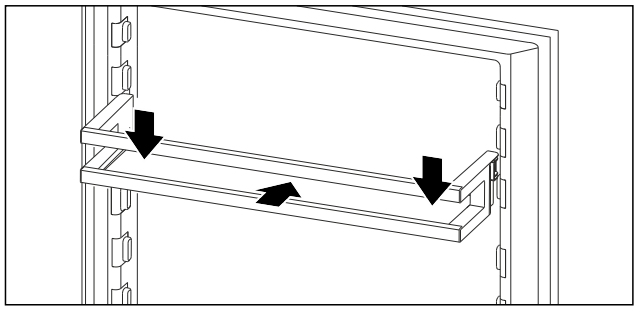

Fig. 128 Example illustration

▶ Insert the door rack.
▶ Press the door rack down.

8.1.4 Inserting the VarioBoxes

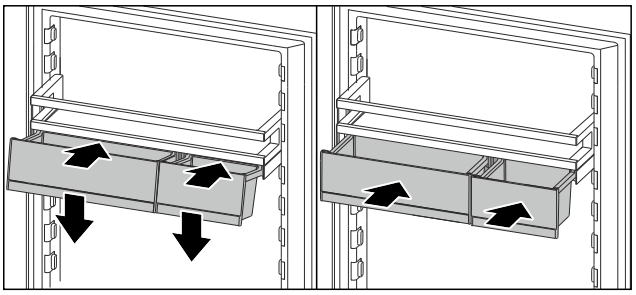

Fig. 129

▶ Place the VarioBoxes at an angle on the ridge of the door rack.
▶ Lower the VarioBoxes.
▶ Push in the VarioBoxes.

8.1.5 Repositioning the VarioBoxes

Make sure that the following requirements are fulfilled:

❑ VarioBoxes are removed. (see 8.1.1 Removing the VarioBoxes)
❑ Door rack is removed. (see 8.1.2 Removing the door rack)

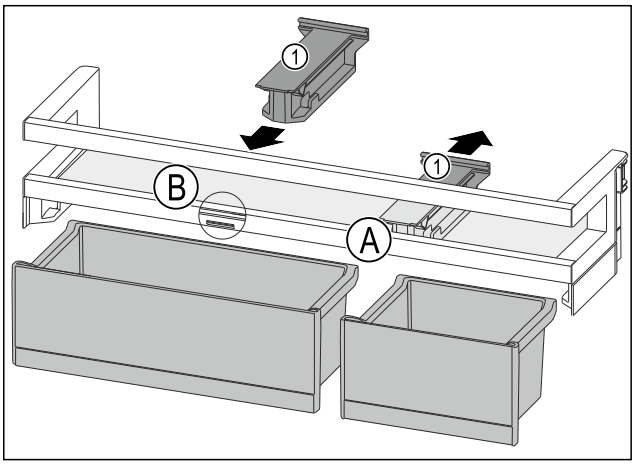

Fig. 130

▶ Pull off the retaining part *Fig. 130 (1)* in position *Fig. 130 (A)* downward.
▶ Insert the retaining part *Fig. 130 (1)* in position *Fig. 130 (B)*.
▶ Insert the door rack. (see 8.1.3 Inserting the door rack)

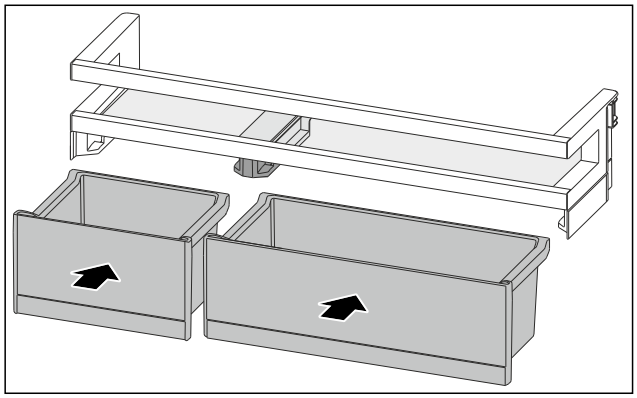

Fig. 131

▶ Insert the VarioBoxes opposite order. (see Fig. 131)

8.1.6 Disassembling the door rack

You can disassemble some of the door racks if you want to clean the door rack or if you'd like to insert or remove replacement parts.

Disassembling the door rack

Make sure that the following requirements are fulfilled:

❑ Door rack is removed. (see 8.1.2 Removing the door rack)

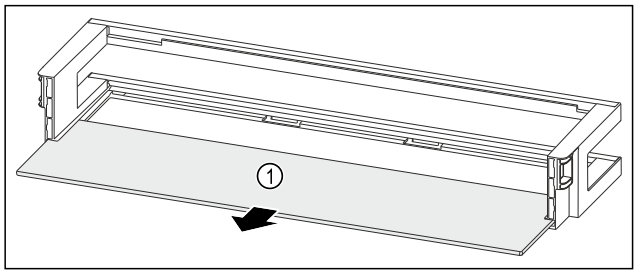

Fig. 132 Door racks with shelf

▶ Remove the shelf *Fig. 132 (1)*.

Disassembling the shelf with VarioBoxes

Make sure that the following requirements are fulfilled:

❑ Door rack is removed. (see 8.1.2 Removing the door rack)

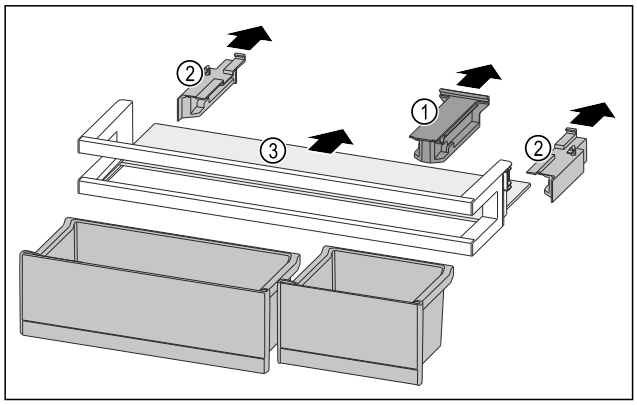

Fig. 133

▶ Remove theVarioBoxes. (see 8.1.1 Removing the VarioBoxes)

▶ Pull off the retaining part *Fig. 133 (1)*.

▶ Pull off the side part *Fig. 133 (2)*.

▶ Remove the shelf *Fig. 133 (3)*.

Disassembling the door racks with bottle holder

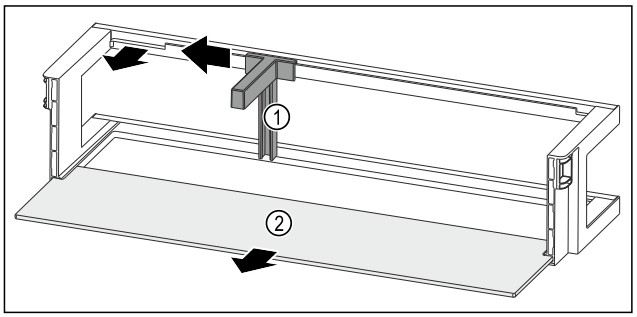

Fig. 134 Door racks with bottle holder and shelf

▶ Push the bottle holder *Fig. 134 (1)* to the side up to the recess.

▶ Remove the bottle holder *Fig. 134 (1)*.

▶ Remove the shelf *Fig. 134 (2)*.

8.1.7 Assembling the door rack

Assembling the door rack

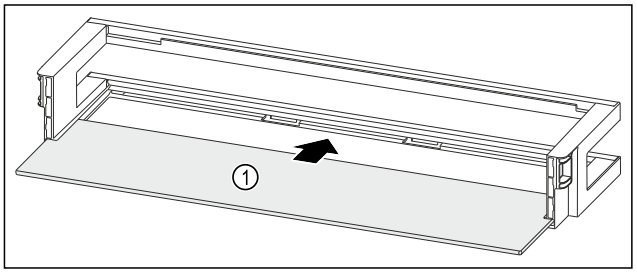

Fig. 135 Door racks with shelf

▶ Push the shelf *Fig. 135 (1)* into the side cutouts.

Assembling the door rack with VarioBoxes

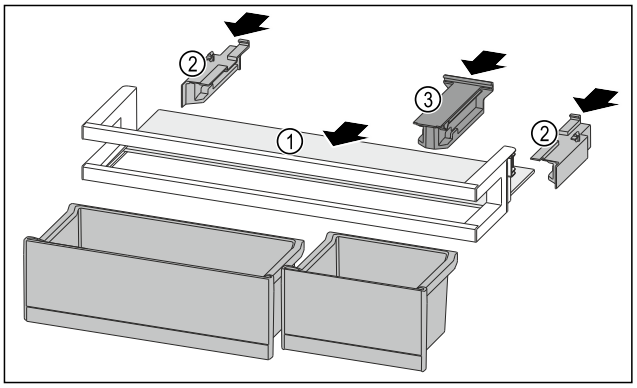

Fig. 136

▶ Push the shelf *Fig. 136 (1)* into the side cutouts.

▶ Insert the side parts *Fig. 136 (2)*.

▶ Insert the retaining part *Fig. 136 (3)*.

▶ Insert the VarioBoxes. (see 8.1.4 Inserting the VarioBoxes)

Assembling the door racks with bottle holder

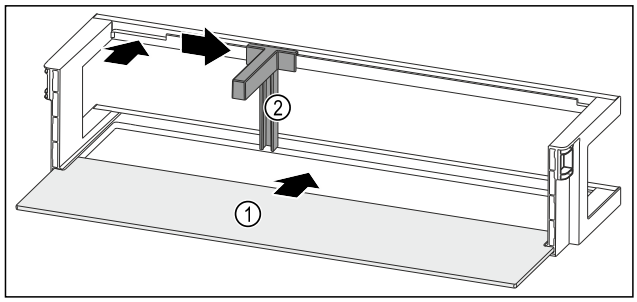

Fig. 137 Door racks with shelf

▶ Push the shelf *Fig. 137 (1)* into the side cutouts.
▶ Insert the bottle holder *Fig. 137 (2)* into the recess.
▶ Push the bottle holder *Fig. 137 (2)* to the side into the desired position.

8.2 Shelves*

8.2.1 Moving/removing shelves

CAUTION
Broken shelves!
Danger of cuts.
▶ Only remove storage shelves when there is nothing on them

Extension stops secure the shelves against being accidentally pulled out

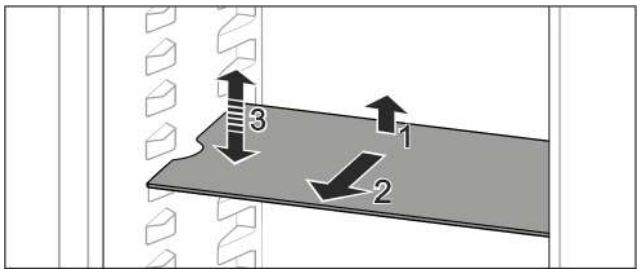

Fig. 138

▶ Lift the shelf and pull to the front.
▷ Side recess to shelf position.
▶ Reposition the shelf: Lift up or lower to the desired height and insert.

-or-

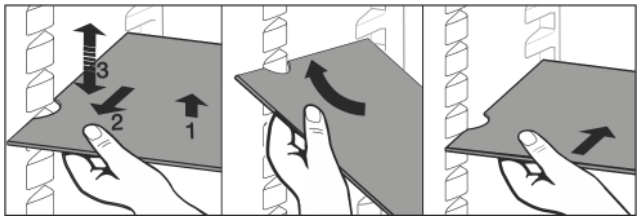

Fig. 139

▶ Take out the shelf completely: Pull out to the front.

▶ Easier removal: Set the shelf at an angle.
▶ Reinsert the shelf: Push it in to its stop limit.
▷ Pull-out stoppers are pointing down.
▷ Pull-out stoppers are behind the front shelf.

8.3 Split shelf

8.3.1 Using the split shelf

CAUTION
Broken shelves!
Danger of cuts.
▶ Only remove storage shelves when there is nothing on them

Extension stops secure the shelves against being accidentally pulled out

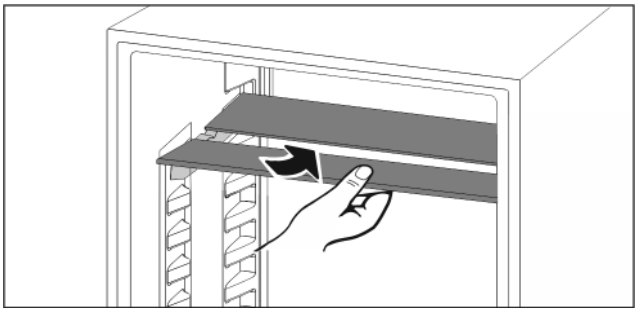

Fig. 140

▶ Push the split shelf underneath as in the illustration

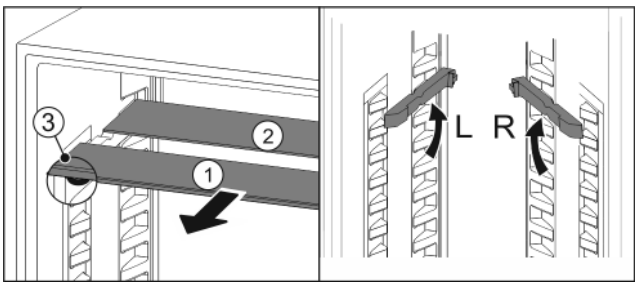

Fig. 141

Adjusting heights:
▶ Pull the glass panels out *Fig. 141 (1)* from the front, one at a time.
▶ Pull the support rails out of their retainers and snap into place at the height you want them.
▶ Slide in the glass panels one at a time.
▷ Flat pull-out stoppers at the front, right behind the support rail.
▷ Taller pull-out stoppers at the back.

Using both shelves:
▶ Hold the bottom glass panel with one hand and pull it to the front.
▷ The glass panel *Fig. 141 (1)* with the trim strip is at the front.
▷ The stops *Fig. 141 (3)* point downward.

8.4 VarioSafe

The VarioSafe offers space in the refrigerator compartment for small groceries, packages, tubes and jars, for example.

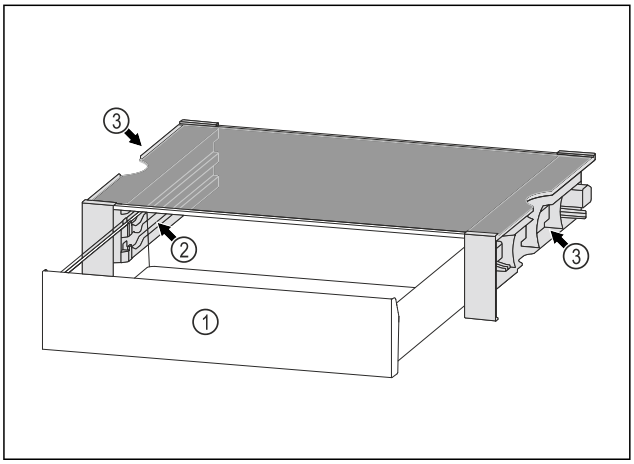

Fig. 142

(1) VarioSafe drawer

(2) Side panels with ribs for VarioSafe drawer

(3) Recesses on the left and right side panel

8.4.1 Inserting the VarioSafe

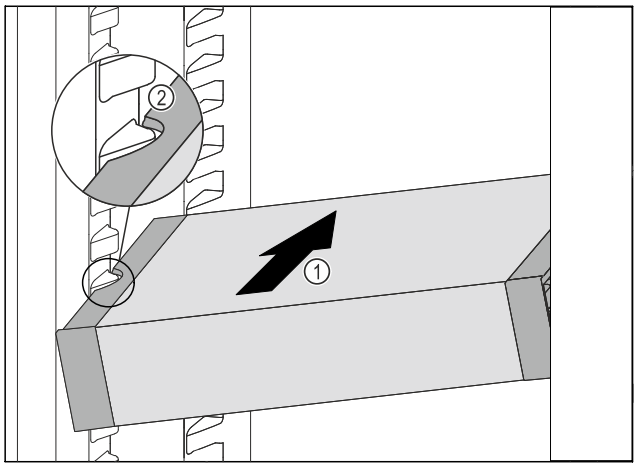

Fig. 143

▶ Insert the VarioSafe into the refrigerator compartment at an angle *Fig. 143 (1)* until the recesses in the side *Fig. 143 (2)* of the VarioSafe are at the level of the support rib in the refrigerator compartment.

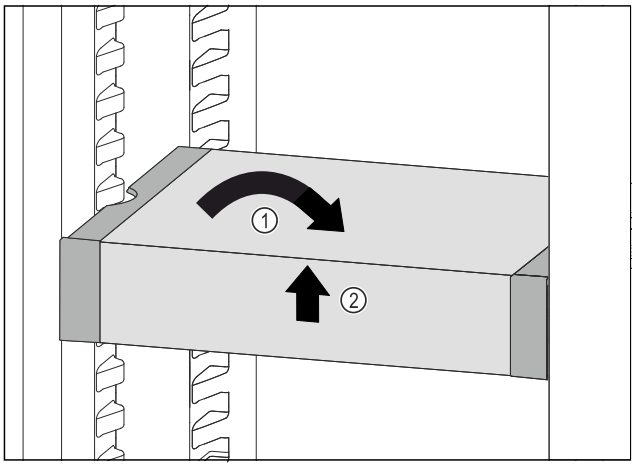

Fig. 144

▶ Set VarioSafe straight. *Fig. 144 (1)*
▶ Lift VarioSafe at the front. *Fig. 144 (2)*

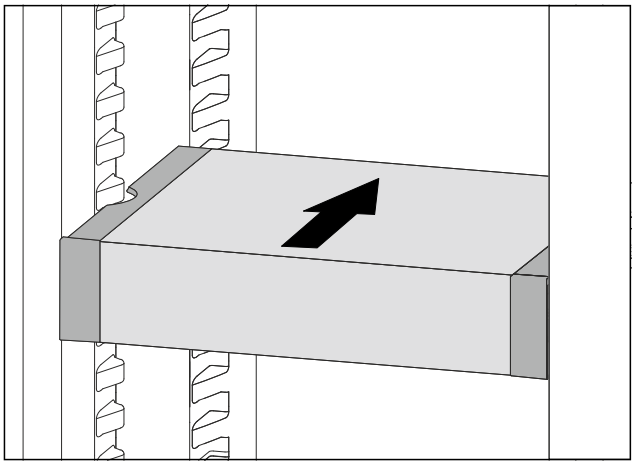

Fig. 145

▶ Lift VarioSafe up toward the front.
▶ Push VarioSafe in to the rear.
▶ Lower VarioSafe.
▷ VarioSafe audibly engages.
▷ VarioSafe is inserted.

8.4.2 Repositioning the VarioSafe

You can move the VarioSafe as a whole in the refrigerator compartment.

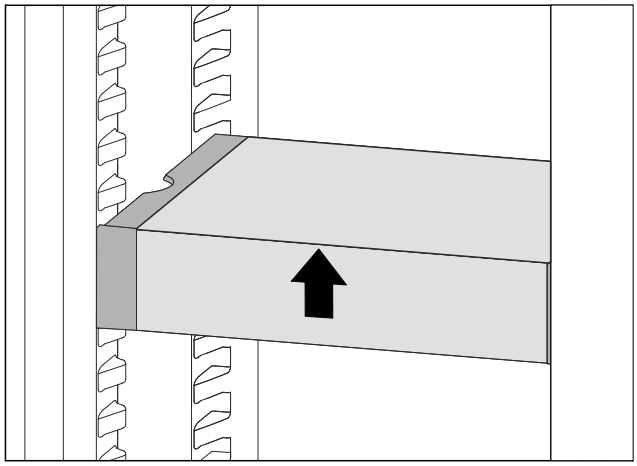

Fig. 146

▶ Lift VarioSafe at the front.

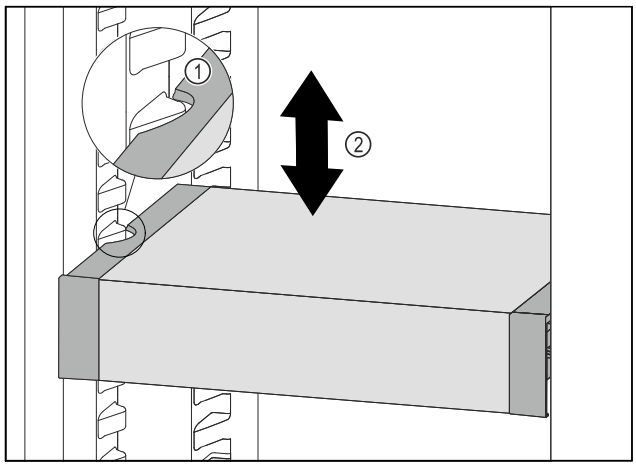

Fig. 147

▶ Pull VarioSafe forwards until the recesses in the side of the VarioSafe are at the level of the support rib in the refrigerator compartment. *Fig. 147 (1)*

▶ Move VarioSafe up or down in the refrigerator compartment until the desired height is reached. *Fig. 147 (2)*

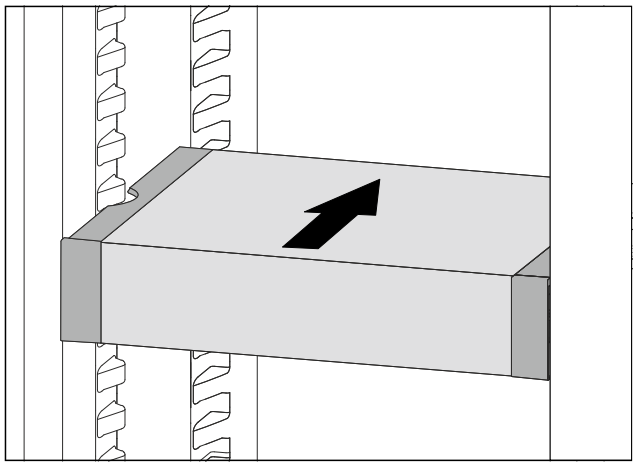

Fig. 148

▶ Lift VarioSafe at the front.

▶ Push VarioSafe in to the rear.

▷ VarioSafe audibly engages.

▷ VarioSafe is offset in height.

8.4.3 Moving the VarioSafe drawer

You can use the VarioSafe drawer at two different heights. If you would like to store taller foodstuffs in the VarioSafe drawer, slide the VarioSafe drawer in on the bottom rib. If you would like to store smaller foodstuffs in the VarioSafe drawer, slide the VarioSafe drawer in on the top rib.

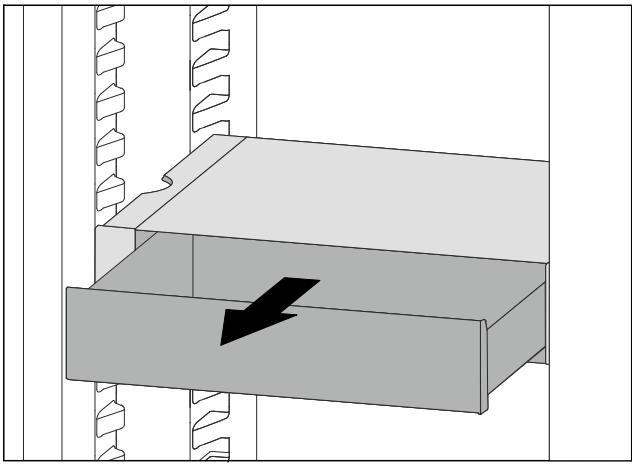

Fig. 149

▶ Pull out the VarioSafe drawer as far as it will go.

▶ Lift the VarioSafe drawer up at the front.

▶ Remove the VarioSafe drawer to the front.

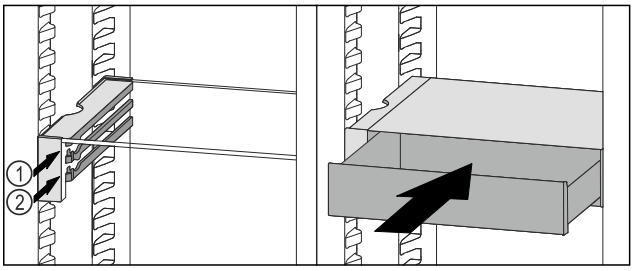

Fig. 150

▶ Lift the VarioSafe drawer up at the front.

▶ Place the VarioSafe drawer behind the stoppers on desired rib *Fig. 150 (1)* or *Fig. 150 (2)*.

▷ VarioSafe drawer is offset in height.

8.4.4 Removing the VarioSafe

You can remove the VarioSafe as a whole.

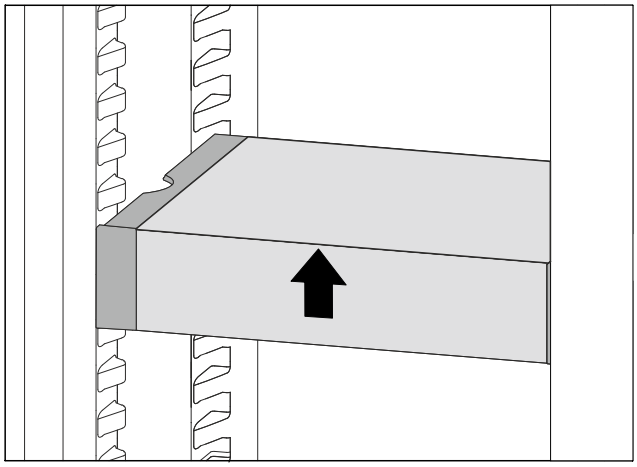

Fig. 151

▶ Lift VarioSafe at the front.

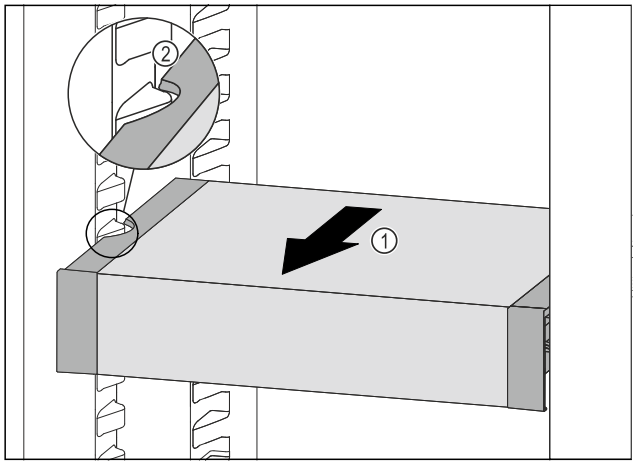

Fig. 152

▶ Pull VarioSafe forward *Fig. 152 (1)* until the recesses in the side of the VarioSafe are at the level of the support rib in the refrigerator compartment. *Fig. 152 (2)*

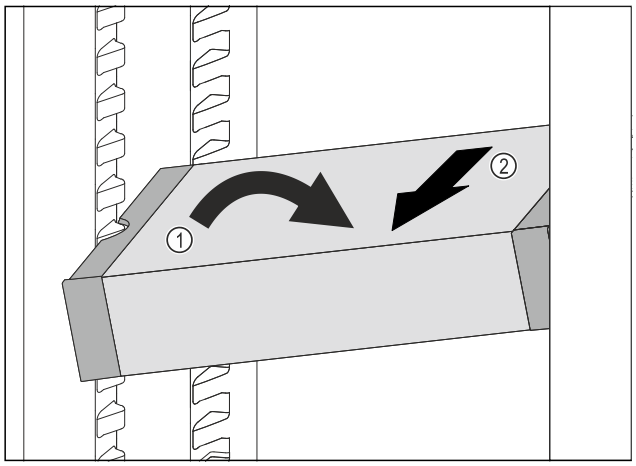

Fig. 153

▶ Set VarioSafe in refrigerator compartment at an angle. *Fig. 153 (1)*

▶ Take VarioSafe out to the front. *Fig. 153 (2)*

▷ VarioSafe is removed.

8.4.5 Disassembling the VarioSafe

You can disassemble the VarioSafe into its individual parts if you want to clean the VarioSafe or if you need to install or remove parts.

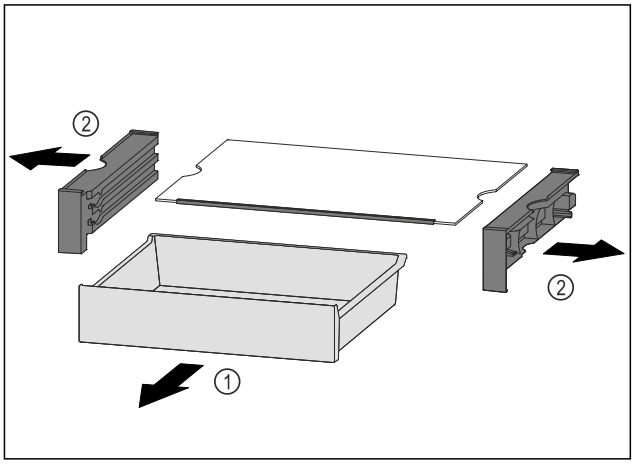

Fig. 154

▶ Remove VarioSafe as a whole. (see 8.4.4 Removing the VarioSafe)

▶ Disassemble VarioSafe according to the illustration.

8.5 InfinitySpring*

The built-in water dispenser provides convenient drinking water. The water temperature depends on the temperature in the fridge.

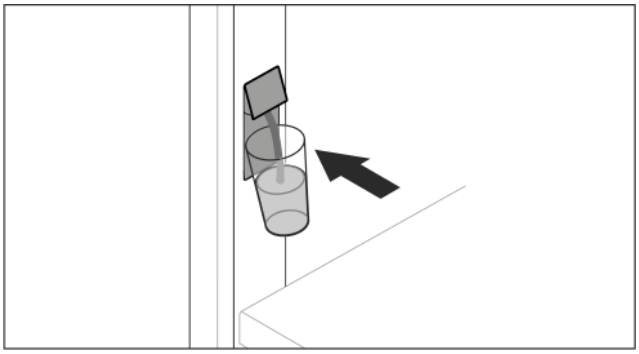

Fig. 155

▶ Push the glass against the button pushbutton of the dispenser.

▷ The outlet unit moves out: water pours into the glass.

▶ Avoid splashes: Remove the glass slowly.
If dispensing larger quantities of water:

▶ If the water flow stops, remove the water tank and push your container against the button push button of the dispenser again.

8.6 Variable bottle shelf

You can use either the glass shelf or the variable bottle shelf on the floor of the fridge section. The glass shelf is inserted upon delivery.

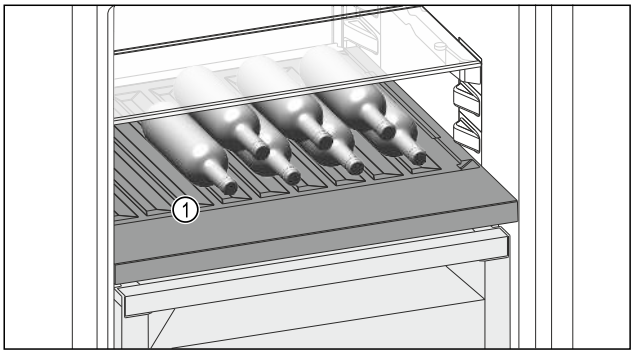

Fig. 156 Example illustration
(1) Variable bottle rack

8.6.1 Using the variable bottle shelf

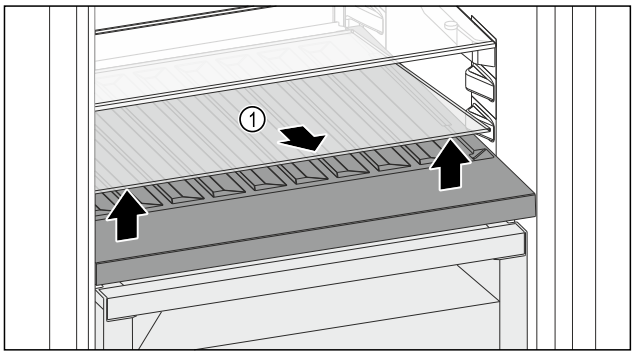

Fig. 157

▶ Lift the glass shelf *Fig. 157 (1)* in the front at the recess and pull it out.
▶ Store the glass shelf *Fig. 157 (1)* somewhere safe outside of the appliance.

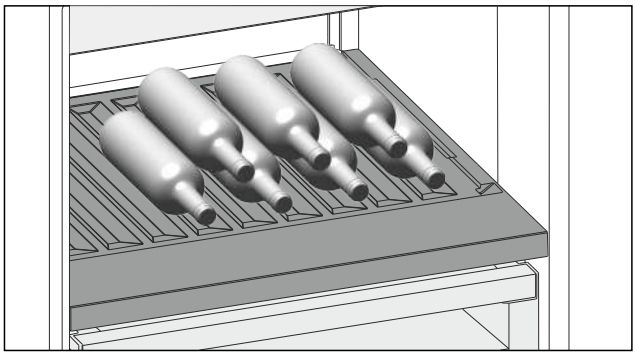

Fig. 158

▶ Insert the bottles facing backwards towards the rear wall. (see Fig. 158)

Note
If the bottles protrude towards the front over the variable bottle shelf:
▶ Set the lower door rack one position higher.

8.6.2 Using the glass shelf

Make sure that the following requirements are fulfilled:

❑ Bottles are removed.
❑ The variable bottle shelf has been cleaned.

(see 9.5 Removing / inserting the variable bottle shelf)
(see 9.8.4 Cleaning the equipment)

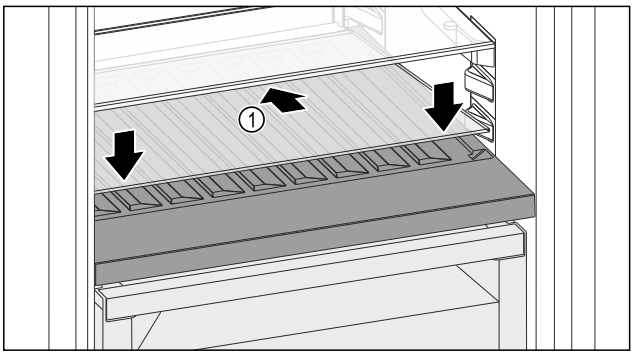

Fig. 159

▶ Place the glass shelf *Fig. 159 (1)* at an angle, tilted back and down.
▶ Lower the glass shelf *Fig. 159 (1)* at the front.

8.7 Drawers

You can remove the drawers for cleaning.

You can remove the drawers to use VarioSpace.

The way to remove/insert the drawers varies depending on the pull-out system. Your appliance can contain a variety of pull-out systems.

Note
Insufficient ventilation results in an increase in energy consumption and reduction of the refrigerating performance.
▶ Leave the bottom drawer in appliance!
▶ Never obstruct the vents on the interior rear wall!

8.7.1 Drawer on appliance base or glass shelf

The drawer runs directly on the appliance base or on a glass shelf. There are no rails.

When you remove the drawers, you can use the glass shelves below them as storage shelves.

Removing drawer

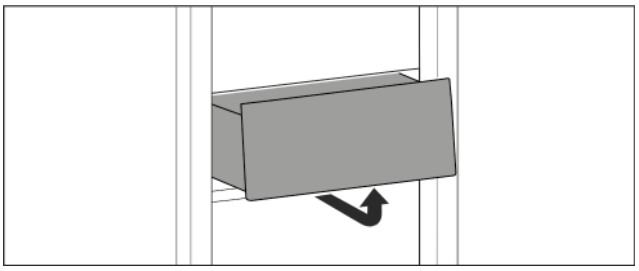

Fig. 160

▶ Remove drawer as shown in the diagram.

Inserting drawer

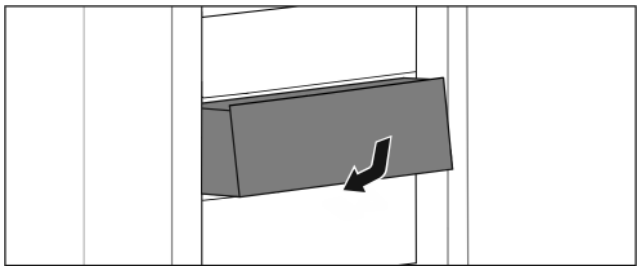

Fig. 161

▶ Insert drawer as shown in the diagram.

8.7.2 Drawer on telescopic rails

The drawer runs on full-extension rails (telescopic rails). There are full-extension telescopic rails and telescopic rails with partial pull-out. Drawers which are full extension can be pulled out fully from the appliance. Drawers with partial pull-out cannot be pulled out fully from the appliance. The system in your appliance depends on the type of appliance.

Full extension

If you have full-extension rails, there is a clamp located at the back on the left and right of the rail.

Removing drawer

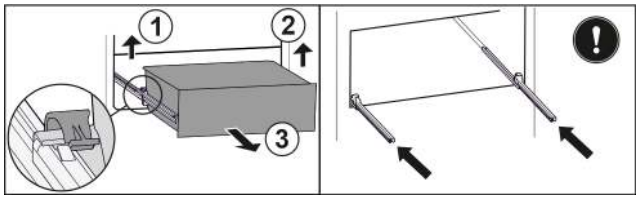

Fig. 162

▶ Pull out drawer as far as it will go.
▶ Lift left clamp and simultaneously pull drawer forwards on the left. *Fig. 162 (1)*
▶ Lift right clamp and simultaneously pull drawer forwards on the right. *Fig. 162 (2)*
▶ Remove drawer to the front. *Fig. 162 (3)*
▶ Slide rails in.

Inserting drawer

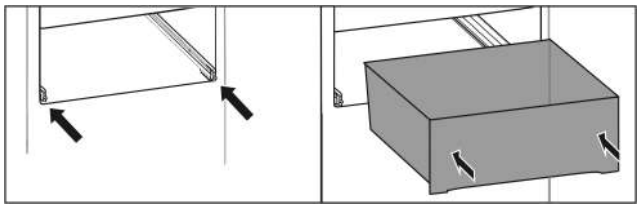

Fig. 163

▶ Slide rails in.
▶ Place drawer on rails.
▶ Slide in drawer to the back.
▷ Drawer latches in audibly at the back.

Partial pull-out freezing compartment*

Note

If the magnet on the top drawer in the freezing compartment is damaged or removed, the door sensor will malfunction.

▶ Do not damage or remove the magnet.

Removing drawer

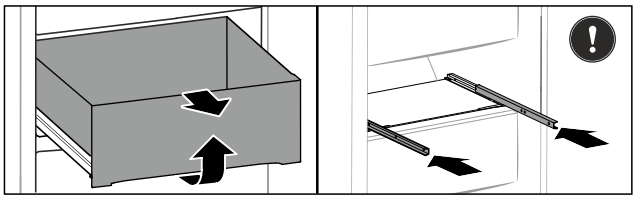

Fig. 164

If the drawer is in the top freezer:

▶ Pull out drawer as far as it will go.
▶ Lift up the front of the drawer.
▶ Remove the drawer from the front.
▶ Slide rails in.

-or-

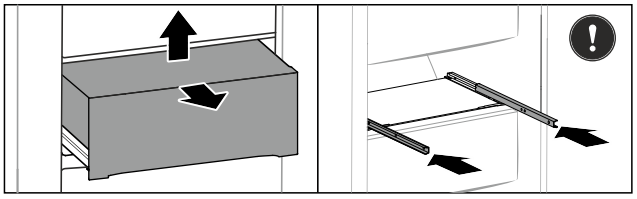

Fig. 165

If the drawer is in the middle of the freezing compartment:

▶ Pull out drawer halfway.

▶ Lift the back of the drawer from the bottom.
▶ Remove the drawer from the front.
▶ Slide rails in.

Inserting drawer

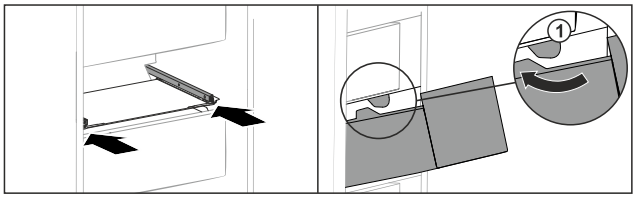

Fig. 166

▶ Slide rails in.
▶ Guide drawer around the stoppers *Fig. 166 (1)*.
▶ Place drawer on rails.
▶ Slide in drawer to the back.

8.8 Lid for Fruit & Vegetable-safe

The lid ensures constant levels of humidity.

The lid is located directly on the drawer and can be covered by shelves or additional drawers.

* Depending on model and options

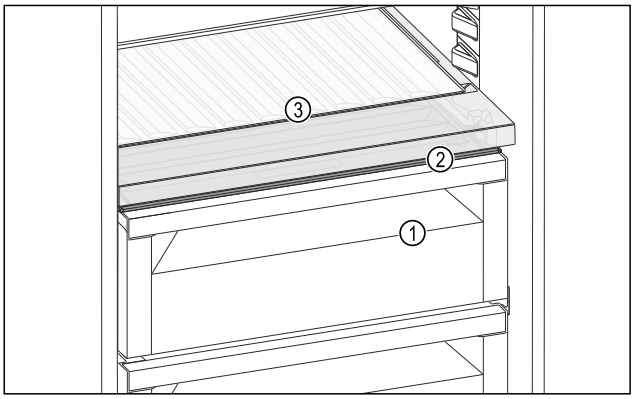

Fig. 167 Example illustration of the lid for Fruit & Vegetable-safe

(1) Fruit & Vegetable-safe
(2) Lid for Fruit & Vegetable-safe
(3) Variable bottle rack

8.8.1 Reducing humidity in the drawer

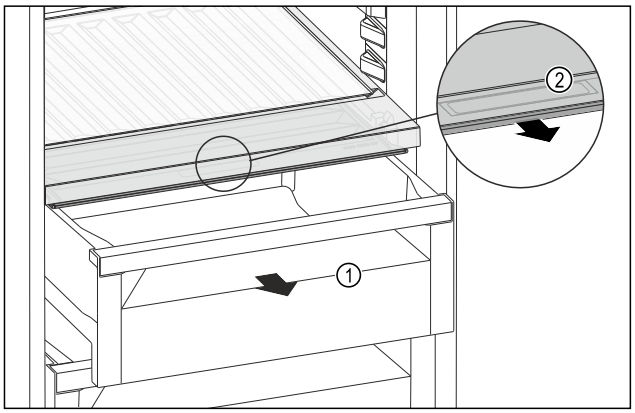

Fig. 168

▶ Pull out the drawer *Fig. 168 (1)*.
▶ Grip the handle recess *Fig. 168 (2)* on the lid while pulling the lid forward at the same time.
▷ When the drawer is closed, there is a small gap between the lid and the drawer.
▷ HydroBreeze cannot be used. (see 8.9 HydroBreeze*) *

8.8.2 Increasing humidity in the drawer

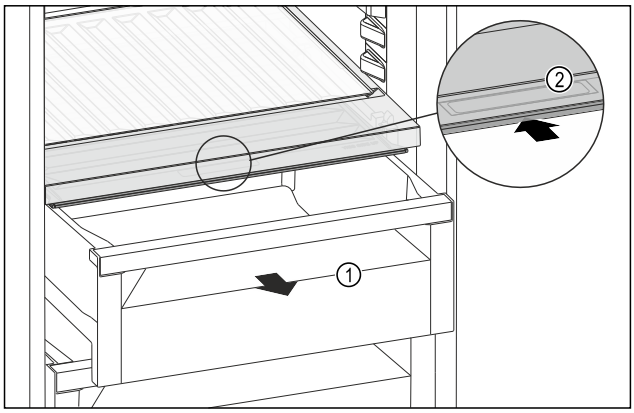

Fig. 169

▶ Pull out the drawer *Fig. 169 (1)*.
▶ Grip the handle recess *Fig. 169 (2)* on the lid while pulling the lid backward at the same time.
▷ When the drawer is closed, the lid closes tightly with the drawer.
▷ HydroBreeze can be used. (see 8.9 HydroBreeze*) *

8.8.3 Using Fruit & Vegetable-safe as a Meat & Dairy-safe

You can use the Fruit & Vegetable-safe as a Meat & Dairy-safe. To do so, you must reduce the moisture in the drawer. (see 8.8.1 Reducing humidity in the drawer)

8.8.4 Using Fruit & Vegetable-safe with HydroBreeze*

You can use the Fruit & Vegetable-safe with HydroBreeze. To do so, you must increase the moisture in the drawer. (see 8.8.2 Increasing humidity in the drawer)

8.9 HydroBreeze*

HydroBreeze emits a mist over the refrigerated goods to provide moisture every time the door is opened.

The HydroBreeze and its water tank are located in the adjustable bottle shelf.

Make sure that the following requirements are fulfilled

- Water tank is cleaned. (see 9.8.4 Cleaning the equipment)
- The water tank is properly engaged.
- The moisture in the drawer is set to high humidity. (see 8.8.2 Increasing humidity in the drawer)
- HydroBreeze is activated. (see HydroBreeze*)

8.9.1 Fill the water tank

WARNING
Contaminated water!
Poisoning.
▶ Fill with drinking water only.
▶ HydroBreeze is off: Empty the water tank.
▶ HydroBreeze is out of use for a prolonged period: Empty the water tank.

NOTICE
Sugary liquids!
Damage to the HydroBreeze.
▶ Fill with drinking water only.

Note
Use filtered, decarbonized water to provide the best-quality drinking water and keep the HydroBreeze working smoothly.
This water quality can be achieved using a table water filter of the kind available in trade retail outlets.
▶ Fill the water tank with filtered, decarbonized drinking water.

The water tank is built into the adjustable bottle shelf (see 2.2 Overview of appliances and equipment) .

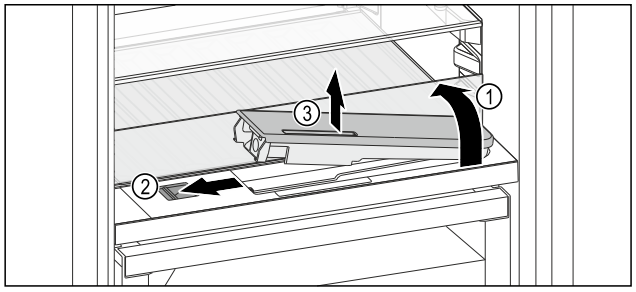

Fig. 170

▶ Press on the back-left corner of the front glass plate.
▷ The glass panel folds upwards.
▶ Lift the glass panel and fold to the back as far as it will go *Fig. 170 (1)*.
▷ The glass panel is upright.
▶ Slide the slider *Fig. 170 (2)* to the left.
▷ The water tank jumps out of its recess.
▶ Remove the water tank *Fig. 170 (3)*.
▶ Cleaning the water tank (see 9.8.4 Cleaning the equipment) .
Angular opening:
▶ Fill with drinking water up to the level mark.
▶ Insert the water tank, bottom first, into the recess.
▶ Slowly lower the front part and push the tank in.
▷ Water tank is engaged.

8.9.2 Disassembling the water tank

You can disassemble the water tank of the HydroBreeze to clean it.

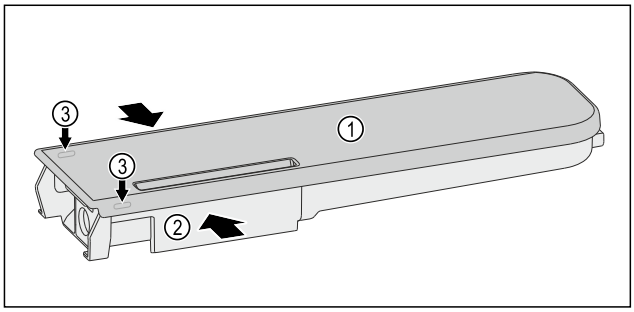

Fig. 171

▶ Squeeze the water tank *Fig. 171 (2)* and carefully lever the cover *Fig. 171 (1)* over the latches *Fig. 171 (3)* pull it up.
▷ The cover is released.

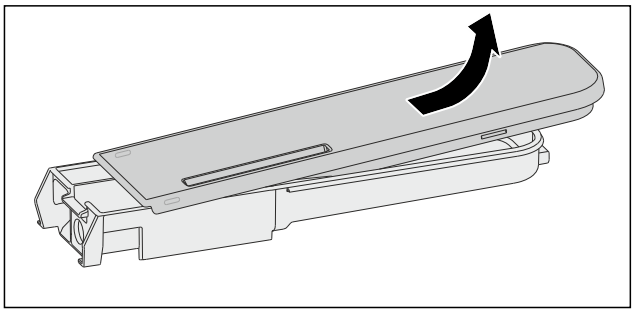

Fig. 172

▶ Slightly move the cover *Fig. 171 (1)* back and forth and remove it from the top.
▷ The water tank is disassembled.

8.10 Glass shelves

You can remove the glass shelf under the drawers for cleaning.

You can remove the glass shelf under the drawers to use VarioSpace.

8.10.1 Removing / inserting the glass shelf

Make sure that the following requirements are fulfilled:
❑ Glass shelf under the drawer: Drawer has been removed. (see 8.7 Drawers)

Removing glass shelf

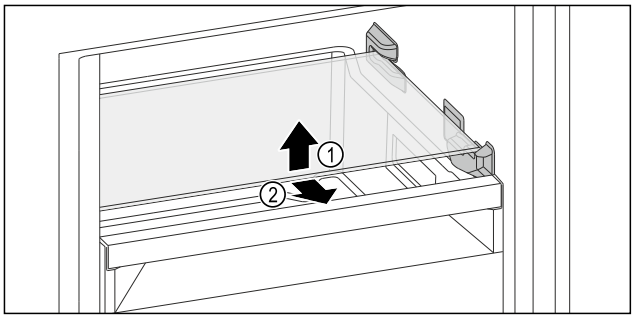

*Fig. 173 Example illustration of the glass shelf**

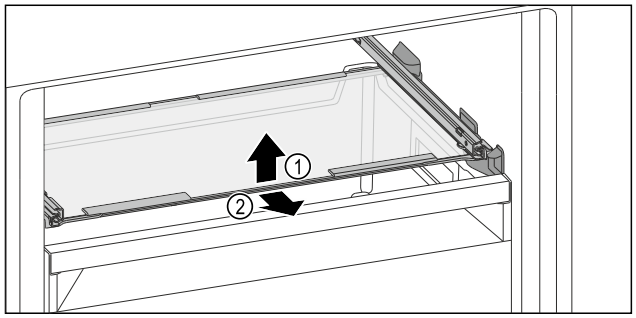

*Fig. 174 Example illustration of the glass shelf**

▶ Lift the front of the glass shelf.
▶ Remove the glass shelf from the front.

Inserting the glass shelf

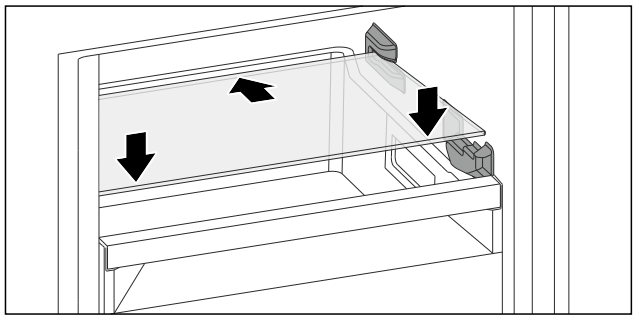

*Fig. 175 Example illustration of the glass shelf**

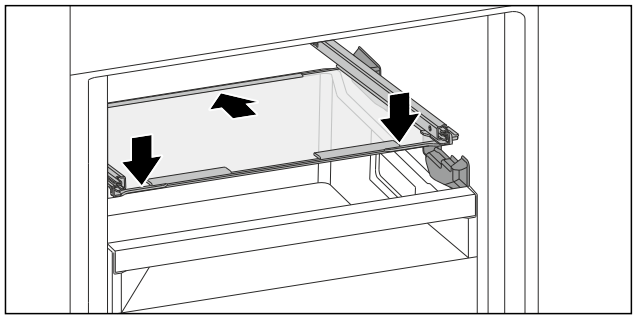

*Fig. 176 Example illustration of the glass shelf**

▶ Set down the glass shelf diagonally behind the stoppers.
▶ Lower glass shelf.
▶ Slide in glass shelf to the back.

8.11 IceMaker

The IceMaker is used exclusively for the production of ice cubes in household quantities.

Make sure that the following conditions are fulfilled

- IceMaker is cleaned. (see 9 Maintenance)
- IceMaker drawer is cleaned.
- IceMaker drawer is fully inserted.

8.11.1 Producing ice cubes

The production capacity depends on the freezer temperature The lower the temperature, the more ice cubes can be produced in a certain period

Once IceMaker is switched on for the first time, it can take up to 24 hours to produce the first ice cubes.

▶ Activate the IceMaker function.
▶ Making many ice cubes: Activate the MaxIce function.
▶ To make a large quantity of ice cubes: Move or remove the separators in the IceMaker drawer.
▶ Distribute ice cubes evenly in the drawer to increase its capacity.
▶ Close the drawer: The IceMaker starts making ice again.

Note
When a certain level is reached in the IceMaker drawer, it stops making ice cubes. The IceMaker does not fill the drawer to the very top.

8.11.2 Using the drawer with the IceMaker deactivated

If you deactivate the IceMaker, then you can use the entire IceMaker drawer as a freezer drawer.

▶ Deactivate IceMaker. (see Deactivating IceMaker and MaxIce)

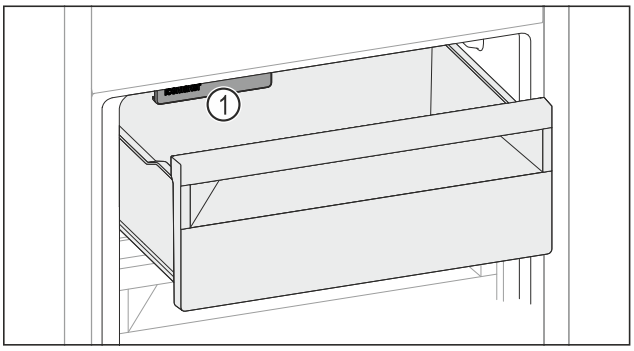

Fig. 177

▶ Place food in drawer.
If you put food in the left side of the drawer:
▶ Pay attention to the IceMaker *Fig. 177 (1)*.

8.12 VarioSpace

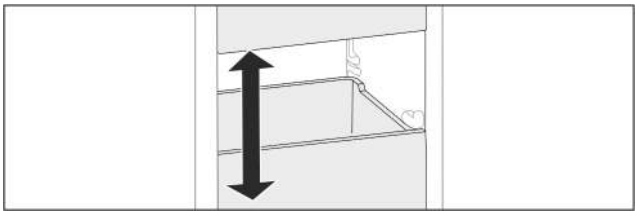

Fig. 178

You can remove drawers and glass panels from your appliance. This provides more room for large food items such as poultry, joints of meat, large game and bulky baked goods. You can then freeze these items whole for later preparation.

▶ Note the load limits on the drawers and glass panels (see 10.1 Technical specifications) .

8.13 Butter dish

8.13.1 Opening/closing the butter dish

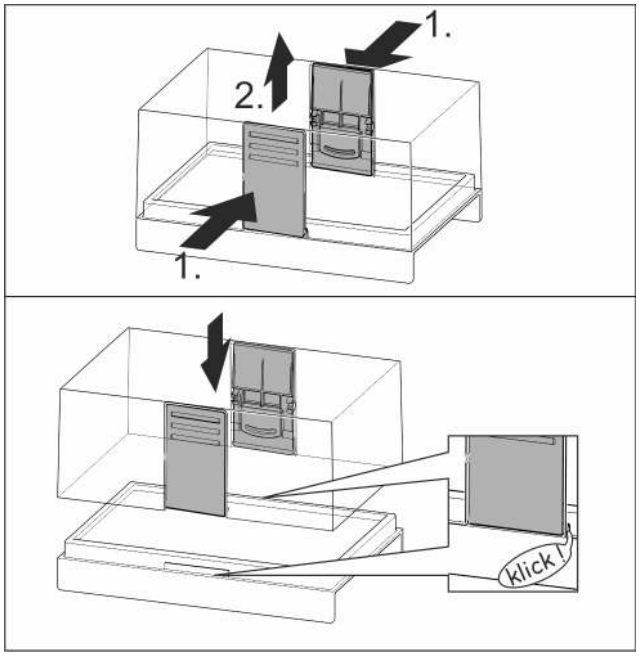

Fig. 179

8.13.2 Dismantling the butter dish

You can disassemble the butter dish for cleaning.

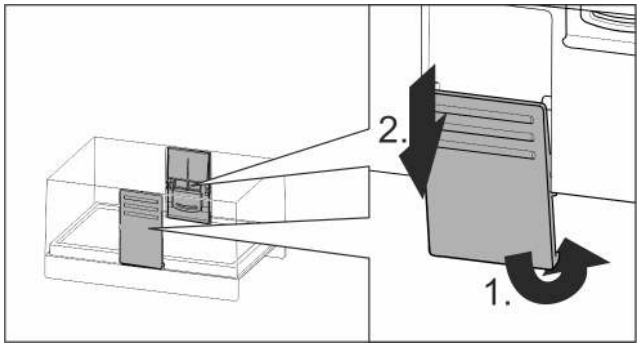

Fig. 180

▶ Disassemble the butter dish.

8.14 Egg rack

You can pull out and turn the egg rack. You can use both sides of the egg rack so you can label specifics like the purchase date.

8.14.1 Using the egg rack

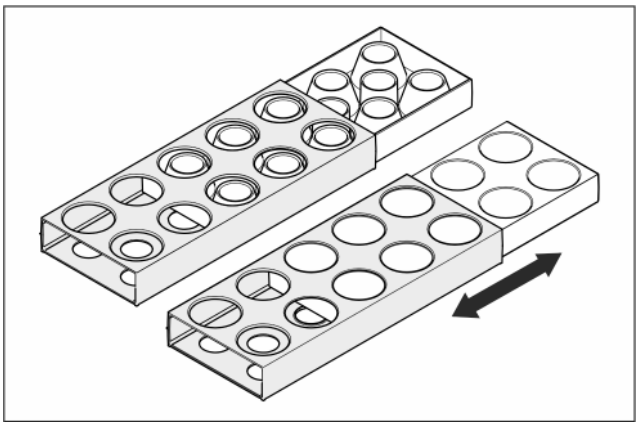

Fig. 181

▶ Top section: store hen eggs.
▶ Bottom section: store quail eggs.

8.15 Bottle rack

8.15.1 Using the bottle rack

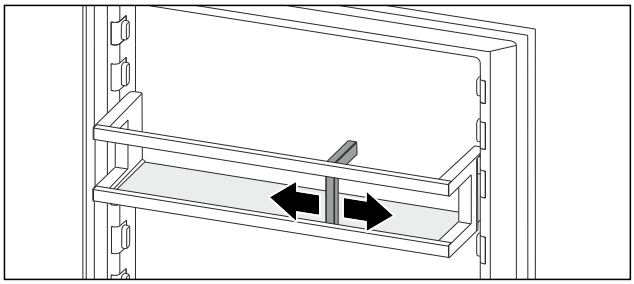

Fig. 182

▶ Slide the bottle rack at the edges.
▷ Stops bottles from tipping over.

8.16 FlexSystem

8.16.1 Using the FlexSystem

The FlexSystem helps you store and arrange food clearly and in the way you want. It lets you clearly divide your food into fruit, vegetables or by use-by dates, for example.

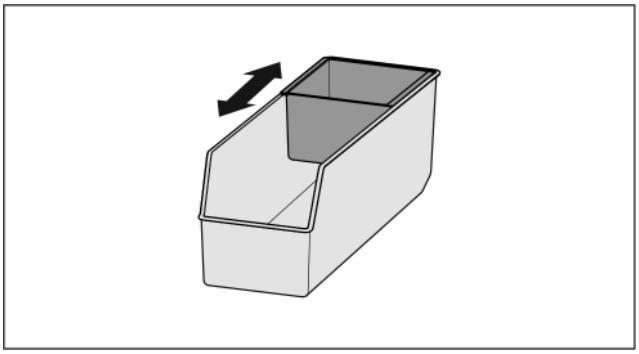

Fig. 183

▶ Move the inside tray.

8.16.2 Removing the FlexSystem

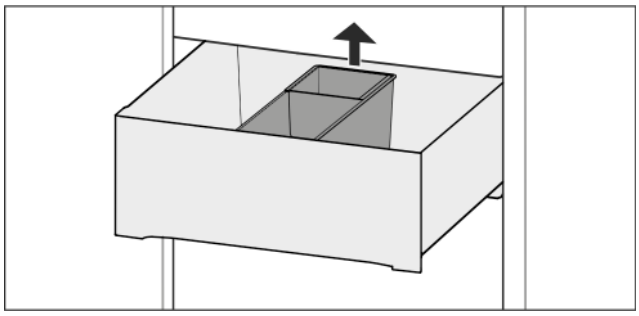

Fig. 184

▶ Lift the FlexSystem at the back.
▶ Pull up and out.

8.16.3 Inserting the FlexSystem

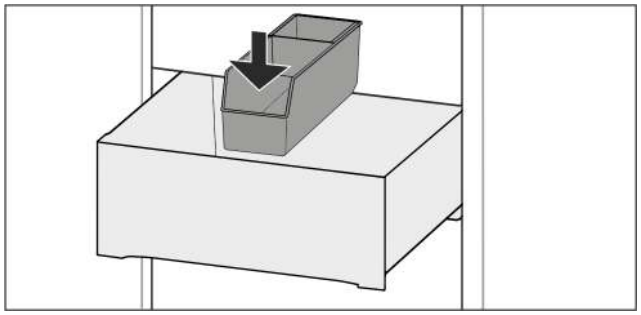

Fig. 185

▶ Insert front of the FlexSystem first.
▶ Lower the back part.

8.16.4 Disassembling the FlexSystem

The FlexSystem can be dismantled for cleaning.

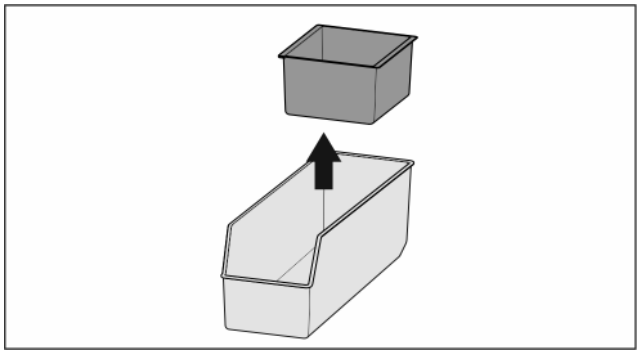

Fig. 186

▶ Dismantling the FlexSystem.

8.17 Flexible ice compartment divider

The IceMaker's ice cube drawer has a flexible ice compartment divider. This allows you to store larger quantities of ice cubes or additional food items as needed. You can move or remove the ice compartment divider.

8.17.1 Moving the flexible ice compartment divider

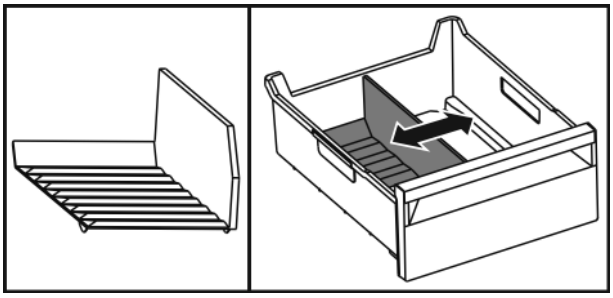

Fig. 187 Example illustration of the ice compartment divider

▶ Move the ice compartment divider to the desired position.

8.17.2 Removing the flexible ice compartment divider

Make sure that the following requirements are fulfilled:

❑ Ice cube drawer is removed. (see 8.7 Drawers)

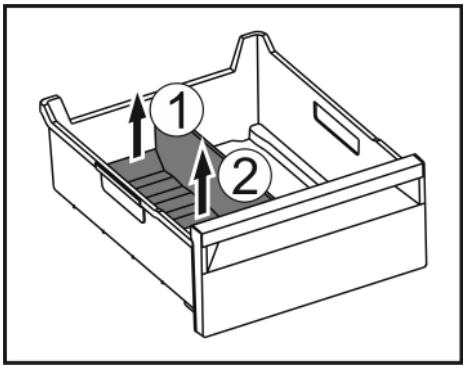

Fig. 188

▶ Lift the rear part of the ice compartment divider. *Fig. 188 (1)*
▶ Remove the ice compartment divider upwards. *Fig. 188 (2)*

8.17.3 Putting in the flexible ice compartment divider

Make sure that the following requirements are fulfilled:

❑ Ice cube drawer is removed. (see 8.7 Drawers)

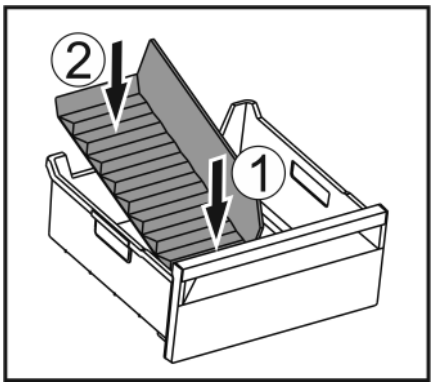

Fig. 189

▶ Insert the front part of the ice compartment divider. *Fig. 189 (1)*

▶ Lower the rear part of the ice compartment divider to the drawer bottom. *Fig. 189 (2)*

9 Maintenance

9.1 FreshAir carbon filter

The FreshAir carbon filter is located in the compartment above the fan.

It guarantees the best air quality.

❑ Change the carbon filter every 6 months.
When the reminder is set, a message on the display prompts you to change it.

❑ You can dispose of the carbon filter with the regular household waste.

Note
FreshAir activated charcoal filters can be purchased from the Liebherr Service Center. The address for your respective country can be found on the back of the instructions.

9.1.1 Removing the FreshAir carbon filter

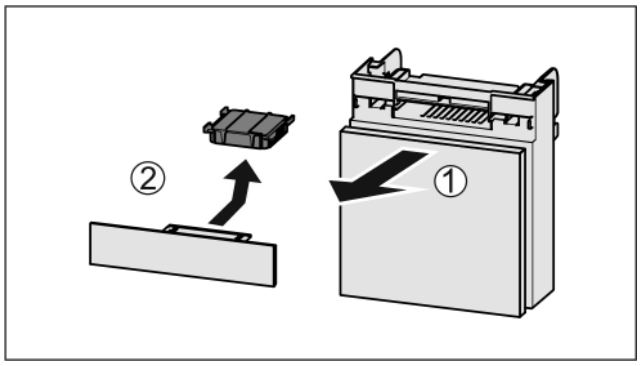

Fig. 190

▶ Pull out the compartment *Fig. 190 (1)*.

▶ Remove the carbon filter *Fig. 190 (2)*.

9.1.2 Inserting the FreshAir carbon filter

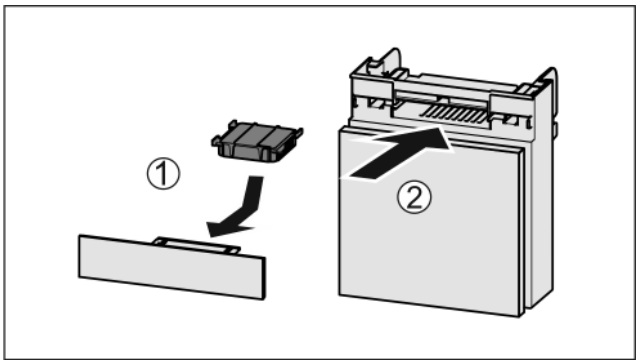

Fig. 191

▶ Insert the carbon filter as shown in the diagram *Fig. 191 (1)*.

▷ The carbon filter clicks into place.
If the carbon filter is pointing downwards:

▶ Push the compartment in *Fig. 191 (2)*.

▷ The carbon filter is now ready for use.

9.2 Water tank*

The InfinitySpring is located behind the lowest drawer in the fridge section.*

9.2.1 Removing the water tank

▶ Turn off the water tap.

▶ Run the InfinitySpring for 30 seconds and collect the remaining water in a glass.*

▶ Remove the drawer.

▶ Turn the water tank all the way to the left and pull it out.

▷ Water dripping out is collected in the drip tray.

▶ Drain the water from the drip tray.*

▶ Clean the drip tray with a cloth or in the dishwasher.*

9.2.2 Inserting the water tank

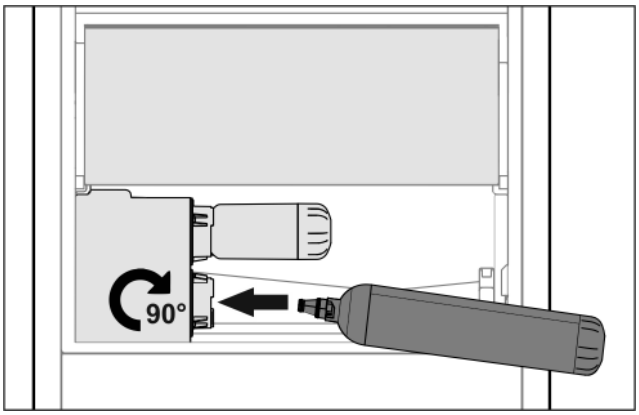

Fig. 192

▶ Remove the drawer.

▶ Insert the water tank and turn approx. 90° to the right until it engages.

▶ Check that the water tank is sealed and no water leaks out.

▶ Insert the drawer.

▶ Turn on the water tap.

▶ Bleed the water system. (see 4.2.1 Vent the water system) *

Instead of the water filter, you can use an additional water tank.*

Note
The water tank is available as a spare part.

9.2.3 Removing / inserting the drip tray*

You can remove the drip tray for cleaning.

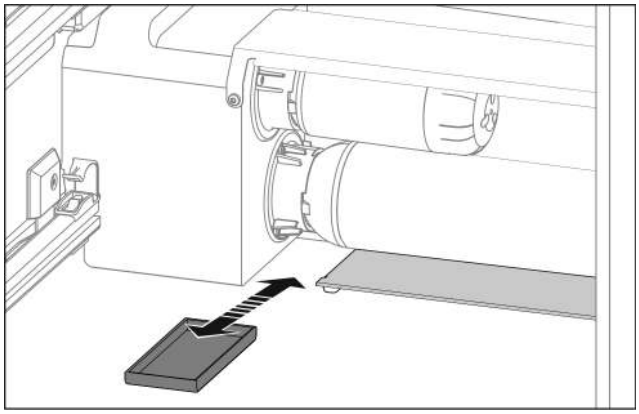

Fig. 193

▶ Pull out the drip tray to the front.

9.3 Water filter*

The water filter is located behind the lowest drawer in the fridge section.

It absorbs deposits in the water and reduces the taste of chlorine.

- ❑ Replace the water filter at least every 6 months under the specified usage conditions or if the flow rate drops significantly.
- ❑ The water filter contains carbon and can be disposed of with the regular household waste.

Note
The water filter can be purchased from the Liebherr Service Center. The address for your respective country can be found on the back of the instructions.

9.3.1 Removing the water filter

▶ Remove the drawer.
▶ Turn the water filter all the way counterclockwise and pull it out.
▷ Water dripping out is collected in the drip tray.
▶ Clean the drip tray with a cloth or in the dishwasher.*

9.3.2 Installing the water filter

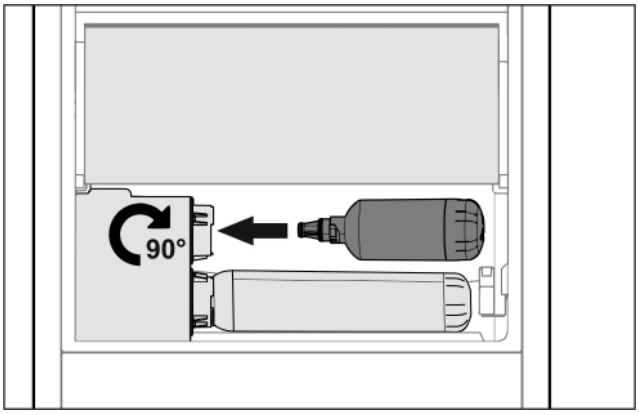

Fig. 194

Make sure that the following conditions are fulfilled

- ❑ Water pressure is maintained (see Installation Instructions, Water Connection).

▶ Remove the drawer.
▶ Insert the water filter and turn clockwise approx. 90° until it engages.
▶ Make sure the filter does not leak and no water is coming out.
▶ Insert the drawer.

Note
New water filters may contain suspended solids.*
▶ After changing the filter: Draw and dispose of 3 l (3 qt) water at the InfinitySpring.

▷ The water filter is now ready for use.

9.4 Disassembling / assembling pull-out systems

9.4.1 Notes on disassembly

You can disassemble some of the pull-out systems for cleaning. Your appliance can contain a variety of pull-out systems.

The following pull-out systems can be disassembled or cannot be disassembled:

Pull-out system	can be disassembled / cannot be disassembled
Drawer on appliance base or glass shelf	cannot be disassembled
Full extension	cannot be disassembled
Partial-extension in the freezer section*	can be disassembled (see Partial pull-out freezing compartment*) *

9.4.2 Drawer on telescopic rails

Partial pull-out freezing compartment*

Disassembling pull-out system

Make sure that the following requirements are fulfilled:

- ❑ Drawer has been removed.
- ❑ Glass shelf has been removed. (see 8.10 Glass shelves)

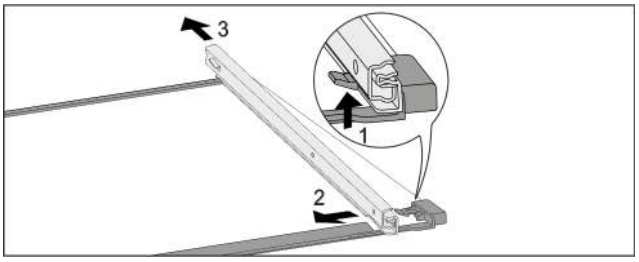

Fig. 195 Glass shelf with rails

▶ Push up front click-in hooks. *Fig. 195 (1)*

▶ Slide pull-out rails to the side *Fig. 195 (2)* and backwards *Fig. 195 (3)*.

Installing pull-out system

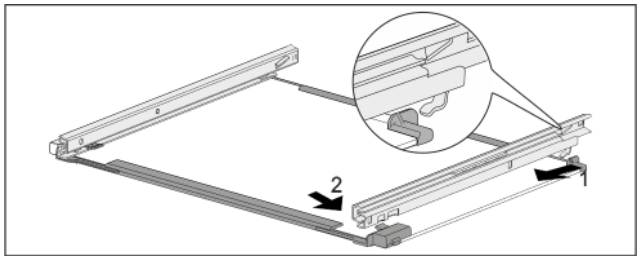

Fig. 196 Glass shelf with rails

▶ Hook in rail at the back. *Fig. 196 (1)*
▶ Hook in rail at the front. *Fig. 196 (2)*

9.5 Removing / inserting the variable bottle shelf

You can remove the variable bottle shelf for cleaning.

9.5.1 Removing the variable bottle shelf

Make sure that the following requirements are fulfilled:

❑ Bottles are removed.
❑ Glass shelf is removed. (see 8.6.1 Using the variable bottle shelf)

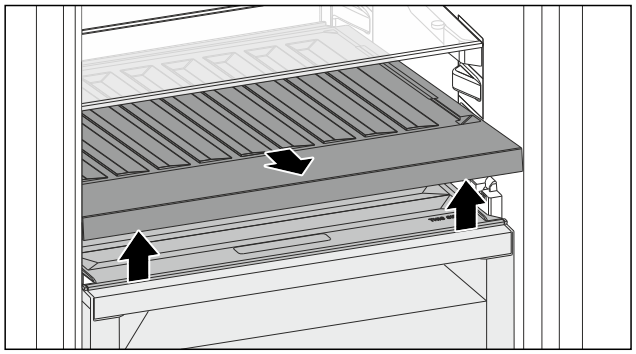

Fig. 197

▶ Lift the variable bottle shelf from the front and pull it out.
▷ The compartment lid is visible.

Note
Liebherr recommends:

Do not store any product on the compartment lid below it.

9.5.2 Inserting the variable bottle shelf

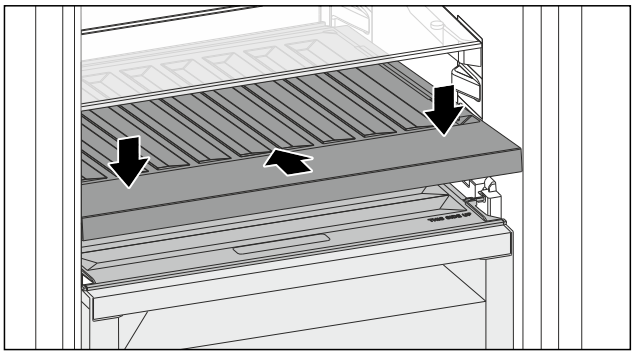

Fig. 198

▶ Push in the variable bottle shelf as far as it goes and press it down.
▷ The back plugs on the variable bottle shelf are connected automatically.
▷ LED light ups.
▶ Insert the glass shelf. (see 8.6.2 Using the glass shelf)

-or-

▶ Use the variable bottle shelf for bottles.

9.6 Lid for Fruit & Vegetable-safe

You can remove the lid for cleaning.

9.6.1 Removing the lid

Make sure that the following requirements are fulfilled:

❑ The glass plate directly above the variable bottle rack has been removed.
❑ The variable bottle rack has been removed.
❑ The drawer directly below the lid has been removed. (see 8.7 Drawers)

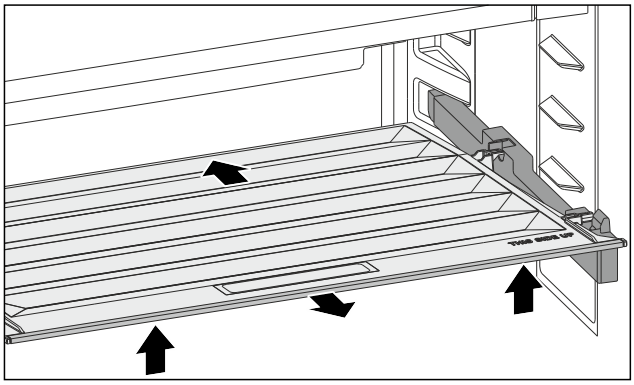

Fig. 199

▶ Push the lid backward.
▶ Lift up the lid forward.
▶ Remove the front lid by lifting it up at an angle.

9.6.2 Inserting the lid

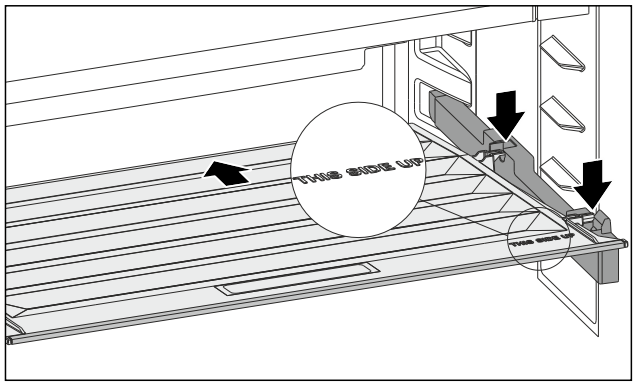

Fig. 200

If the lettering THIS SIDE UP is on top:

▶ Insert the rear bracket retainers in the corresponding rear openings.
▶ Push the lid backward.
▶ Lower the lid at the front and latch the front bracket retainers in the openings.
▶ Bring the lid to the desired position.

9.7 Defrosting the appliance

9.7.1 Defrosting the refrigerator compartment

Defrosting is performed automatically. The water from the thawing process runs out via the drain opening and is evaporated.

▶ Clean the drain hole regularly. (see 9.8 Cleaning the appliance)

9.7.2 Defrosting the freezer compartment with NoFrost

Defrosting is performed automatically by the NoFrost system. The moisture condenses on the evaporator and is periodically defrosted and evaporated.

The appliance does not need to be defrosted.

9.8 Cleaning the appliance

9.8.1 Preparation

WARNING
Danger of electric shock.
▶ Unplug refrigerator or disconnect power.

WARNING
Danger of fire
▶ Do not damage the refrigerant circuit.

▶ Empty appliance.
▶ Pull out the power plug.

-or-
▶ Activate CleaningMode. (see CleaningMode)

9.8.2 Cleaning the housing

NOTICE
Improper cleaning!
Damage to the appliance.
▶ Only use soft cleaning cloths and ph-neutral all-purpose cleaners.
▶ Do not use steel wool or sponges that scour or scratch.
▶ Do not use caustic or abrasive cleaning materials or those containing sand, chloride, or acids.

WARNING
Risk of injury or damage due to hot steam.
Hot steam can cause scalding/burns and damage to surfaces.
▶ Do not use steam cleaners.

▶ Wipe the housing down with soft, clean cloth. If very dirty, use lukewarm water with a neutral cleaner. Glass surfaces can also be cleaned with glass cleaner.

9.8.3 Cleaning the interior

NOTICE
Improper cleaning!
Damage to the appliance.
▶ Only use soft cleaning cloths and ph-neutral all-purpose cleaners.
▶ Do not use steel wool or sponges that scour or scratch.
▶ Do not use caustic or abrasive cleaning materials or those containing sand, chloride, or acids.

▶ Plastic surfaces: clean by hand with a soft clean cloth, lukewarm water and a little detergent.
▶ Metal surfaces: clean by hand with a soft clean cloth, lukewarm water and a little detergent.
▶ Drain hole: remove any deposits with a thin item such as a cotton bud.

9.8.4 Cleaning the equipment

NOTICE
Improper cleaning!
Damage to the appliance.
▶ Only use soft cleaning cloths and ph-neutral all-purpose cleaners.
▶ Do not use steel wool or sponges that scour or scratch.
▶ Do not use caustic or abrasive cleaning materials or those containing sand, chloride, or acids.

Clean with a soft, clean cloth, lukewarm water and a little washing up liquid:

- Shelf*

- Split shelf
- VarioSafe
- Lid for Fruit & Vegetable-safe
- Drawer
  Please note: Do not remove the magnet on the drawer. The magnet ensures that the IceMaker functions.
- Flexible ice compartment divider in the ice cube tray of the IceMakers
- Variable bottle shelf
- FlexSystem

Clean with a damp cloth:

- Retracting rails
  Please note: the grease in the tracks is there for lubrication purposes and must not be removed!

Clean in the dishwasher up to 60 °C (140 °F):

- Door racks
- VarioBox
- Bottle rack
- Holder for the split shelf
- HydroBreeze water tank and water tank lid*
- Drip tray*
- Egg rack
- Butter dish
- Ice cube scoop

▶ Disassemble the equipment: see the relevant section.
▶ Clean the equipment.

9.8.5 Cleaning the InfinitySpring *

You can clean the InfinitySpring outlet and around it without disconnecting the appliance from the mains.

We recommend cleaning in the following situations:

❑ Initial commissioning
❑ If out of use for longer than 5 days.

▶ Press the bottom pushbutton of the dispenser.
▷ The outlet unit moves out.
▶ Clean the water outlet and around it with a soft, damp cloth, lukewarm water and a little washing up liquid.
▶ Release the bottom pushbutton.
▶ Draw and dispose of 2 l (2.11 qt) water at the InfinitySpring.

9.8.6 Cleaning the HydroBreeze*

We recommend cleaning in the following situations:

❑ Initial commissioning
❑ HydroBreeze was off for longer than 48 hours.
❑ Refill the water tank.

Make sure that the following requirements are fulfilled

❑ HydroBreeze is off (see HydroBreeze*) .
❑ Water tank was removed and cleaned in the dishwasher.

▶ Wipe out the recess with a damp cloth.
▶ Insert the water tank.
▶ Activate the HydroBreeze.

9.8.7 Cleaning the IceMaker

There are various options for cleaning the IceMaker.

We recommend cleaning in the following situations:

❑ Initial commissioning
❑ With water connection:
  If out of use for longer than 5 days.

Make sure that the following requirements are met:

❑ IceMaker drawer is emptied.
❑ IceMaker drawer is fully inserted.
❑ The IceMaker has been activated.

On first use or if not used for prolonged periods

Clean the IceMaker with TubeClean.

▶ Put an empty 1.5 l (1.59 qt) vessel (max. height 10 cm (3 15/16 in)) in the drawer under the IceMaker.
▶ Activate the TubeClean function.
▷ The rinse process is prepared (max. 60 min.): The symbol flashes.
▷ Water pipes are rinsed: Symbol flashes.
▷ Rinsing process is complete: Function turns off automatically.
▶ Take out the IceMaker drawer and remove the container.
▶ Clean the IceMaker drawer with warm water and a little detergent.
▶ Push in the IceMaker drawer.
▷ Ice cube production starts automatically.

Without water filter*

▶ Dispose of any ice cubes that are produced within 24 hours of the first ice cube production.*

With water filter:*

▶ Dispose of any ice cubes that are produced within 48 hours of the first ice cube production.*

-or-

▶ Draw 2 l (2.11 qt) of water from the InfinitySpring and dispose of it.*

When cleaning is required

Clean the IceMaker manually.

▶ Remove the IceMaker drawer and clean with warm water and a little detergent.
▶ Push in the IceMaker drawer.
▷ Ice cube production starts automatically.

9.8.8 After cleaning

▶ Wipe dry the appliance and items of equipment
▶ Connect and switch on the appliance.
▶ Activate SuperFrost (see 7.2 Appliance functions) .
  When the temperature is sufficiently cold
▶ Place the food inside.
▶ Repeat cleaning regularly.

10 Customer support

10.1 Technical specifications

Temperature zone	
Cool:	3 °C (36 °F) to 9 °C (46 °F)
BioFresh	0 °C (32 °F) to 3 °C (37 °F)
Fish & Sea Food*	-2 °C (28 °F) to 0 °C (32 °F)* Possible settings :* 0 °C (32 °F) | 0 °C (32 °F)* -2 °C (28 °F) | 0 °C (32 °F)* -2 °C (28 °F) | -2 °C (28 °F)*
Freezing	-26 °C (-15 °F) to -15 °C (5 °F)

Maximum amount of food to freeze / 24 hours	
Freezer	See type plate under “freezer capacity .../ 24 h”

Max. door capacity		
Number of drawers, freezer	Top door	Bottom door
2 drawers	12 kg (26.46 lb) 14 kg (30.86 lb)	--
3 drawers	9 kg (19.84 lb)	--

Maximum loading weight of the features			
Equipment	Appliance width 600 mm (23 1/2 in) (see installation instructions, appliance dimensions)	Appliance width 700 mm (27 9/16 in) (see installation instructions, appliance dimensions)	Appliance width 750 mm (29 1/2 in) (see installation instructions, appliance dimensions)
Drawer on glass shelf (see 8.7.1 Drawer on appliance base or glass shelf)	15 kg (33.07 lb)	--	23 kg 50.71 lb

Maximum loading weight of the features			
Equipment	Appliance width 600 mm (23 1/2 in) (see installation instructions, appliance dimensions)	Appliance width 700 mm (27 9/16 in) (see installation instructions, appliance dimensions)	Appliance width 750 mm (29 1/2 in) (see installation instructions, appliance dimensions)
Partial-extension in the freezer section* (see 8.7.2 Drawer on telescopic rails) *	15 kg (33.07 lb) *	22 kg (48.50 lb) *	22 kg (48.50 lb) *

Ice cube production with IceMaker	
Ice cube production / 24 hours	At a temperature of -18 °C (-0 °F): 1.2 kg (2.65 lb) of ice cubes
Maximum ice cube production / 24 hours	When the MaxIce function is active: 1.5 kg (3.31 lb) of ice cubes

Time required to reach various temperatures with VarioTemp		
Initial temperature	Target temperature	Time until target temperature is reached
-18 °C (-0 °F)	0 °C (32 °F)	> 8 hours
-18 °C (-0 °F)	8 °C (46 °F)	> 12 hours
8 °C (46 °F)	14 °C (57 °F)	> 6 hours
14 °C (57 °F)	-18 °C (-0 °F)	> 4 hours

For appliances with a WiFi connection:

Frequency specification	
Frequency band	2.4 GHz
Maximum radiated power	< 100 mW
Purpose of the wireless equipment	Integration in the local WiFi network for data communication

*** Depending on model and options**

10.2 Operating noises

The appliance makes noises while in operation.

- At **less cooling output** the appliance saves energy but takes longer to cool items. The volume is **lower**.
- At **a higher cooling output** the food cools more quickly. The volume is **higher**.

  Examples:
  - Activated functions (see 7.2 Appliance functions)
  - Running fan
  - Freshly sorted food
  - High ambient temperature
  - Door opened for long periods

Noise	Possible cause	Type of noise
Bubbling and splashing	Coolant is flowing into the cooling circuit.	Normal noise
Spitting and hissing	Coolant is spraying into the cooling circuit.	Normal noise
Humming	The appliance cools. The volume depends on the cooling output.	Normal noise
Sipping noises	The self-closing door is being opened and closed.	Normal noise
Whirring and murmuring	The fan is running.	Normal operating noise

Noise	Possible cause	Type of noise
Clicking	Components are being switched on and off.	Normal switching noise
Rattling or humming	Valves are active.	Normal switching noise

Noise	Possible cause	Type of noise	How to resolve
Vibration	Unsuitable setup	Error noise	Adjust the feet to make sure the appliance is horizontal.
Clattering	Equipment, Objects inside the appliance	Error noise	Secure equipment parts. Leave a gap between items.

10.3 Technical faults

Your appliance is designed and manufactured for reliable operation and a long service life. If a malfunction nonetheless occurs during operation, please check whether the malfunction is due to an operating error. In this case, you will have to be charged for the costs incurred, even during the warranty period.

You may be able to rectify the following faults yourself.

10.3.1 Appliance function

Defect	Cause	Remedy
The appliance does not work.	The appliance is not switched on.	▶ Switch on the appliance.
	The power plug is not properly inserted in the wall socket.	▶ Check the power plug.
	The powerfuse in the wall socket is not OK.	▶ Check the fuse.
	Power failure.	▶ Keep the appliance closed. ▶ Protect food: Place cold storage batteries on the food or use another freezer appliance if the power failure lasts longer. ▶ Do not re-freeze defrosted food.
	The IEC socket is not correctly plugged into the appliance.	▶ Check the IEC socket.
The temperature is not cold enough	This means that the door of the appliance is not closed properly	▶ Close the appliance door

Defect	Cause	Remedy
	The ambient temperature is too high	▶ Problem solution: (see 2.4 Range of appliance use)
	The appliance was opened too frequently or for too long	▶ Wait to see if the required temperature corrects itself. If not, contact Customer Service. (see 10.4 Customer Service)
	Too much fresh food was placed inside without SuperFrost.	▶ Solution: (see SuperFrost)
	The temperature is incorrectly set	▶ Set to a colder temperature and check after 24 hours.
	The appliance is too near to a heat source (stove, heater etc).	▶ Change location of appliance or the heat source.
The door seal is defective or should be replaced for other reasons.	The door seal is interchangeable. You can replace it without the use of any special tools.	▶ Contact Customer Service. (see 10.4 Customer Service)
The appliance is iced up or condensation is building.	The door seal may have slipped out of its groove.	▶ Check the door seal is well placed in the groove.
The appliance is warm on the exterior surfaces.*	The heat of the refrigerant circuit is used to prevent condensate from forming	▶ This is normal.

10.3.2 Equipment

Defect	Cause	Remedy
The IceMaker cannot be switched on.	The appliance and therefore the IceMaker are not connected.	▶ Connect the appliance (see Installation Guide).
The IceMaker is not making any ice cubes.	The IceMaker is not switched on.	▶ Activate the IceMaker.
	The drawer of the IceMaker is not properly closed	▶ Close the drawer properly
	The water connection is not open	▶ Open the water connection
The Infinity-Spring is not working.*	The ice cube tray rotates.	▶ Tray again after 1 minute.
	There is air in the system.	▶ Vent the water system. (see 4.2 Putting Infinity-Spring into operation*)
	The water connection is not open	▶ Open the water connection
The water flow at the Infinity-Spring is irregular.*	The aerator is not clean.	▶ Replace aerator. Contact Customer Service. (see 10.4 Customer Service)

Defect	Cause	Remedy
HydroBreeze is not keeping refrigerated foods moist.*	HydroBreeze is not activated.	▶ Activate the HydroBreeze.
	There is not enough water in the water tank	▶ Fill the water tank.
	There is dirt upstream of the concentrator.	▶ Clean the HydroBreeze.
	The water tank is not properly locked into place.	▶ Make sure the water tank clicks in properly.
	The lid of the Fruit & Vegetable-safe is set at “low humidity”.	▶ Set the lid of the Fruit & Vegetable-safe to “high humidity”.
The interior light does not turn on.	The appliance is not switched on.	▶ Switch on the appliance.
	The door was open for more than 15 minutes.	▶ If the door is open, the interior lighting switches off automatically after about 15 minutes.
	The LED interior light is faulty or the lid is damaged.	▶ Contact Customer Service. (see 10.4 Customer Service)

10.4 Customer Service

First check whether you can rectify the fault yourself (see 10 Customer support) . If you cannot rectify the problem, contact Customer Service.

You can find the address in the enclosed brochure “Liebherr-Service” or at home.liebherr.com/service.

WARNING
Unprofessional repair!
Injuries.
▶ A damaged power cable may only be replaced by the manufacturer, the manufacturer’s Customer Service or a similarly qualified person.
▶ For appliances with plug and play connection cables, the change can be made by the customer.

10.4.1 Contacting Customer Service

Make sure that the following appliance information is available:

❑ Appliance name (model and index)
❑ Service no. (service)
❑ Serial no. (S no.)

▶ Call up the appliance information via the display. (see Appliance information)
-or-
▶ Refer to the type plate for appliance information. (see 10.5 Rating plate)

▶ Take note of the appliance information.
▶ Notify customer service: Report errors and the appliance information.
▷ This will help us give you fast and accurate support.
▶ Follow further instructions from Customer Service.

10.5 Rating plate

The nameplate is located behind the drawers on the inside of the appliance.

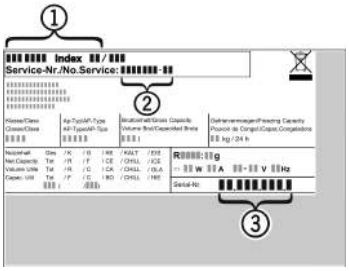

Fig. 201
(1) Appliance name
(2) Service no.
(3) Serial no.
▶ Information from the nameplate.

11 Decommissioning

▶ Empty appliance.
▶ Deactivate IceMaker. (see Deactivating IceMaker and MaxIce)
▶ Deactivate HydroBreeze. (see Deactivating HydroBreeze) *
▶ Switch off appliance. (see Switching appliance off and on)
▶ Pull the power plug from the outlet.
▶ If necessary, remove the IEC socket: Pull the IEC socket out of the appliance plug while turning it to the left and right at the same time.
▶ Clean appliance. (see 9.8 Cleaning the appliance)
▶ Leave the door open to prevent unpleasant odors.

12 Disposal

12.1 Preparing the appliance for disposal

WARNING
Risk of child entrapment!
Before you throw away your old refrigerator or freezer:
▶ Take off the doors.
▶ Leave the shelves in place so that children may not easily climb inside.

Li-Ion

Liebherr uses batteries in some of its appliances. You should remove these before disposal of the old appliance for environmental reasons. If your appliance contains batteries, a corresponding notice is attached to the appliance.

Lamps — If you can remove the lamps yourself without destroying them, also remove these before disposal.

▶ Take the appliance out of operation.
▶ If possible: Remove lamps without destroying them.

12.2 Disposing of the appliance in an environmentally friendly manner

The appliance still contains valuable materials and must be collected separately from unsorted municipal waste so it can be recycled.

Li-Ion

Li-Ion

Dispose of batteries separately from the old appliance. Certain batteries should NOT go in household garbage or recycling bins. Waste batteries can always be recycled or taken to household hazardous waste collection points. To prevent fires from lithium-ion batteries, tape battery terminals and/or place batteries in separate plastic bags and never put these batteries in household garbage or recycling bins.

Lamps — Dispose of removed lamps via the respective collection systems.

For USA: Check the Responsible Appliance Disposal (RAD) program to find a RAD partner near you.

For Canada: Follow your local guidance about recycling and disposal capabilities near you.

WARNING
Leaking refrigerant and oil!
Fire. The refrigerant contained within the appliance is environmentally friendly, but flammable. The oil contained within the appliance is flammable. Escaping refrigerant and oil can ignite if they are of high enough concentration and are exposed to an external heat source.
▶ Do not damage the pipelines of the coolant circuit and the compressor.

▶ Observe the notes on appliance transport.
▶ Transport the appliance away without damaging it.
▶ Dispose of batteries, lamps, and the appliance according to the above specifications.

home.liebherr.com/fridge-manuals

EN Combined fridge-freezer with BioFresh

Issue date: 20250902

Part number index: 7086393-00

For Service in the U.S.: Liebherr Service Center
Toll Free: 1-866-LIEBHER or 1-866-543-2437
Service-appliances.us@liebherr.com
PlusOne Solutions, Inc.
3501 Quadrangle Blvd, Suite 120
Orlando, FL 32817

For Service in Canada: Liebherr Service Center
Toll Free: 1-888-LIEBHER or 1-888-543-2437
www.euro-parts.ca
EURO-PARTS CANADA
39822 Belgrave Road, Belgrave, Ontario, N0G 1E0
Phone: (519) 357-3320 | Fax: (519) 357-1326