Rear Weight Kit

Z Master 4000 Riding Mower

Model No. 163-7435

Installation Instructions

Preparing the Machine

Note: Remove any components attached to the rear 2-inch receiver before installing this kit. Use the provided cap to lock out the receiver.

1. Park the machine on a level surface.
2. Disengage the blade-control switch (PTO) and move the motion-control levers outward to the NEUTRAL-LOCK position.
3. Engage the parking brake.
4. Shut off the machine, remove the key, and wait for all moving parts to stop before leaving the operating position.
5. Allow machine components to cool before performing maintenance.

Installing the Weight Kit

Parts Required

6	Weight plate
1	Plate cover
2	Push nut
4	Bolt
4	Nut

© 2026—The Toro® Company
8111 Lyndale Ave So
Bloomington, MN 55044

Register at
www.Toro.com

Original Instructions (EN)
Printed in the USA
All rights reserved

3481-983

1. Remove and discard the 2 nuts and 2 bolts on the lower rear engine guard.

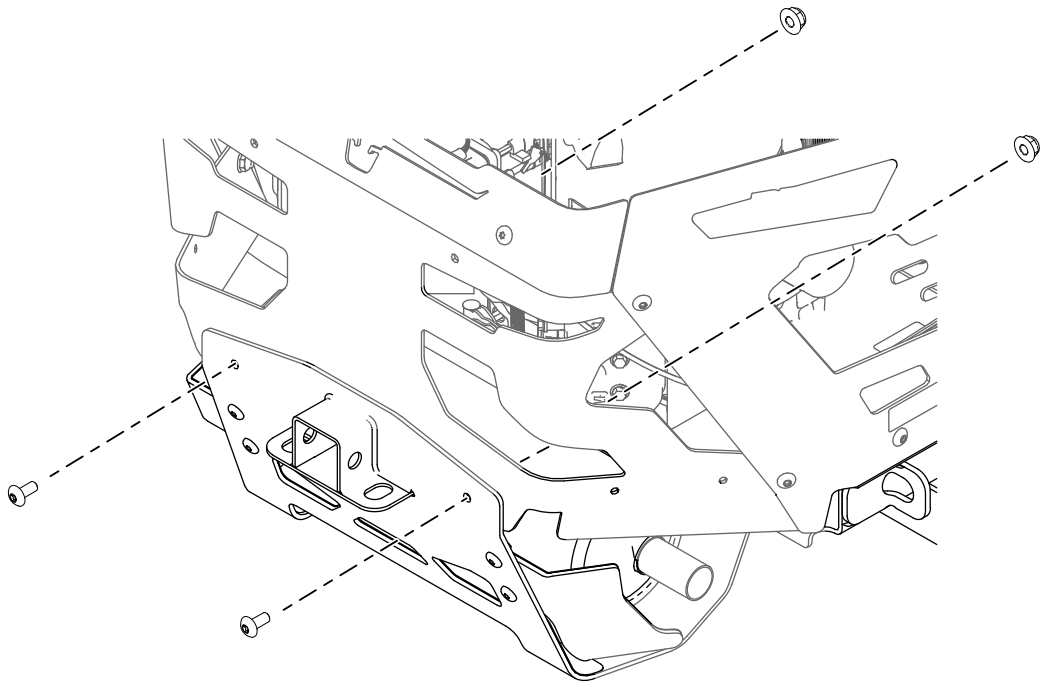

G600473

2. Install the 2 bolts to the rear engine guard.

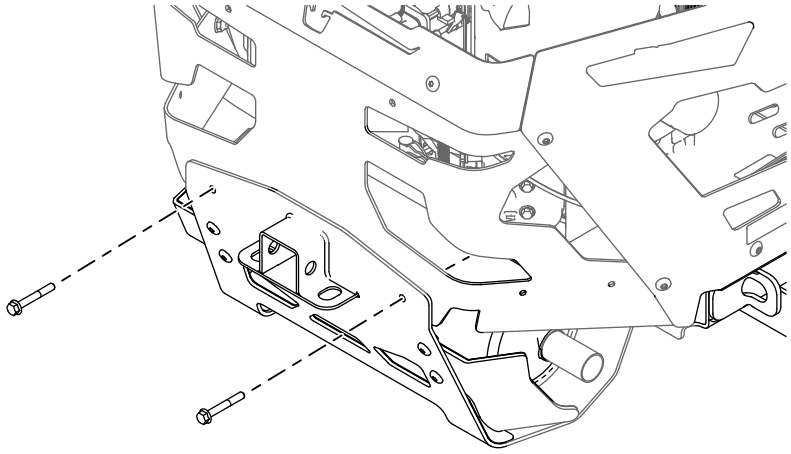

G600624

3. Install each rear weight using the bolts on the bottom of the engine guard to slot-load the weights.

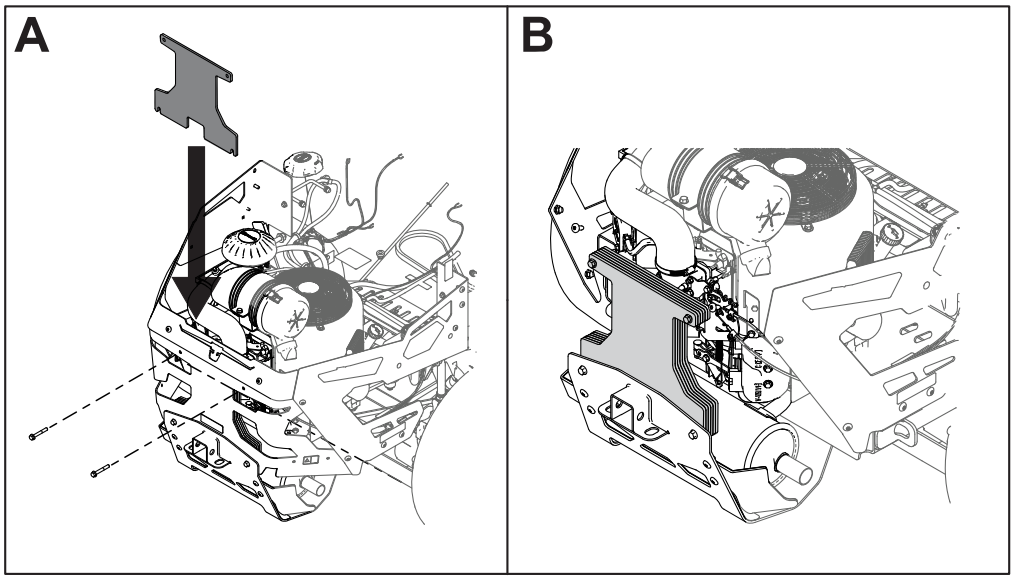

G600474

4. Secure the weights with 2 nuts on the bottom bolts.

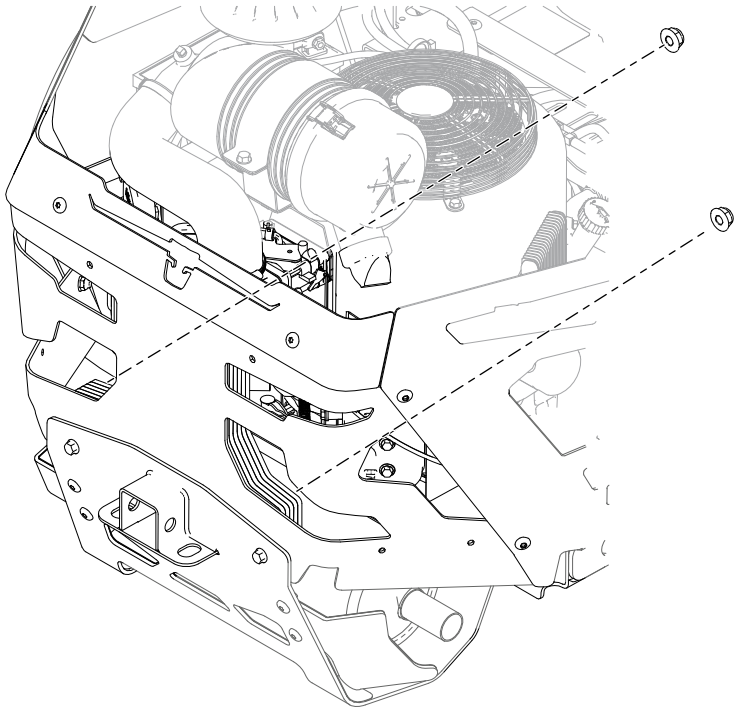

G600638

5. Install 2 bolts through the top of the weights and secure with 2 nuts.

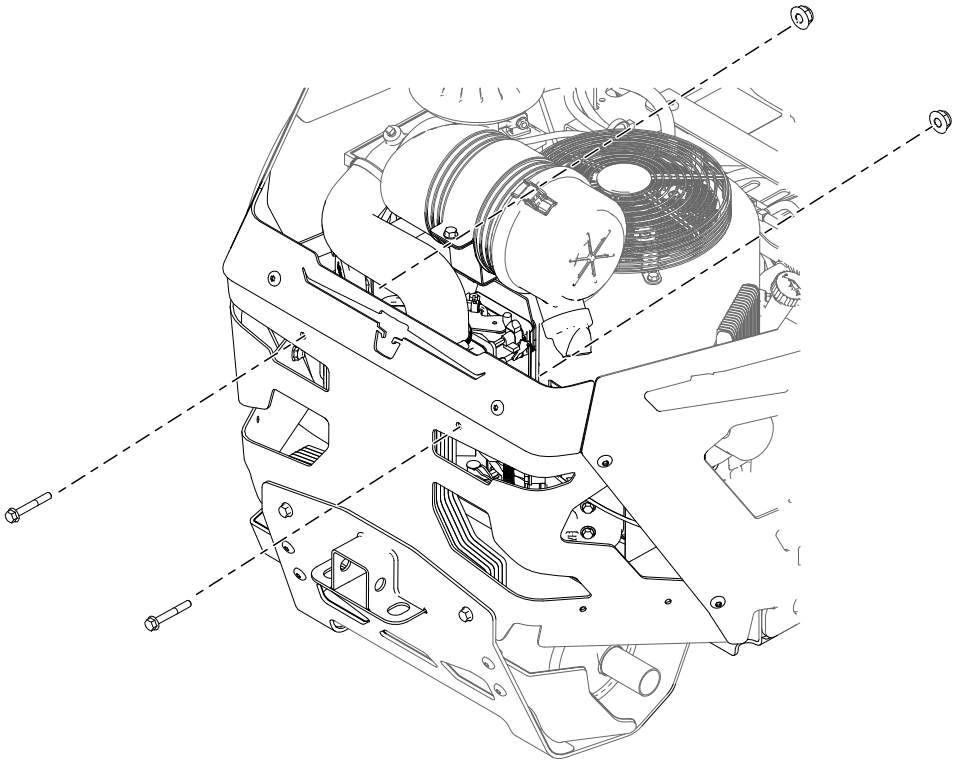

G600636

6. Install the receiver cover.

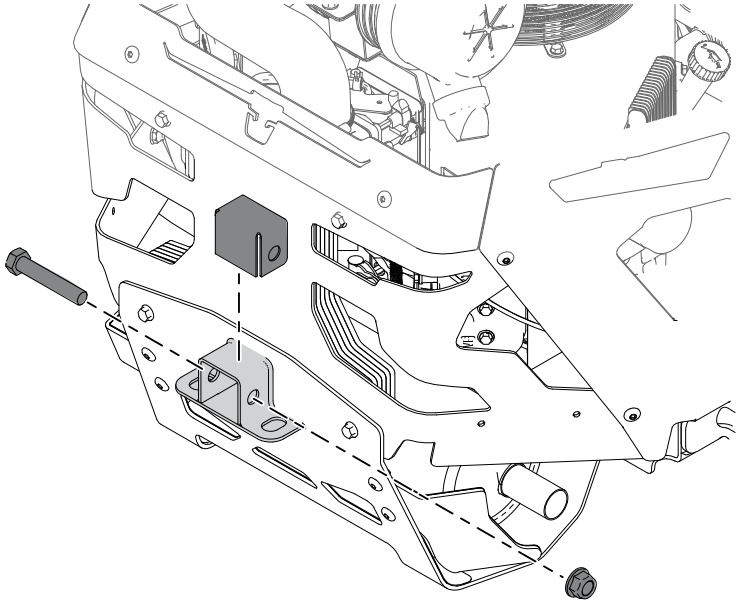

G600472

Notes:

Notes:


TORO®