Form No. 3461-119 Rev C

TORO®

Count on it.

Operator's Manual

Z Master® Professional 2000 Series Riding Mower

With 48in, 52in, or 60in TURBO FORCE® Mower

Model No. 77281—Serial No. 400000000 and Up
Model No. 77281TA—Serial No. 400000000 and Up
Model No. 77283—Serial No. 400000000 and Up
Model No. 77285—Serial No. 400000000 and Up
Model No. 77288—Serial No. 400000000 and Up
Model No. 77291—Serial No. 400000000 and Up
Model No. 77291TA—Serial No. 400000000 and Up
Model No. 77294—Serial No. 400000000 and Up
Model No. 77294TA—Serial No. 400000000 and Up

Register at www.Toro.com.
Original Instructions (EN)

3461-119

It is a violation of California Public Resource Code Section 4442 or 4443 to use or operate the engine on any forest-covered, brush-covered, or grass-covered land unless the engine is equipped with a spark arrester, as defined in Section 4442, maintained in effective working order or the engine is constructed, equipped, and maintained for the prevention of fire.

The enclosed engine owner's manual is supplied for information regarding the US Environmental Protection Agency (EPA) and the California Emission Control Regulation of emission systems, maintenance, and warranty. Replacements may be ordered through the engine manufacturer.

Gross or Net Torque: The gross or net torque of this engine was laboratory rated by the engine manufacturer in accordance with the Society of Automotive Engineers (SAE) J1940 or J2723. As configured to meet safety, emission, and operating requirements, the actual engine torque on this class of mower will be significantly lower. Please refer to the engine manufacturer's information included with the machine.

Important: **If you are using a machine with a Toro engine above 1500 m (5,000 ft) for a continuous period, ensure that the High Altitude Kit has been installed so that the engine meets CARB/EPA emission regulations. The High Altitude Kit increases engine performance while preventing spark-plug fouling, hard starting, and increased emissions. Once you have installed the kit, attach the high-altitude label next to the serial decal on the machine. Contact any Authorized Toro Service Dealer to obtain the proper High Altitude Kit and high-altitude label for your machine. To locate a dealer convenient to you, access our website at www.Toro.com or contact our Toro Customer Care Department at the number(s) listed in your Emission Control Warranty Statement.**

Remove the kit from the engine and restore the engine to its original factory configuration when running the engine under 1500 m (5,000 ft). Do not operate an engine that has been converted for high-altitude use at lower altitudes; otherwise, you could overheat and damage the engine.

If you are unsure whether or not your machine has been converted for high-altitude use, look for the following label.

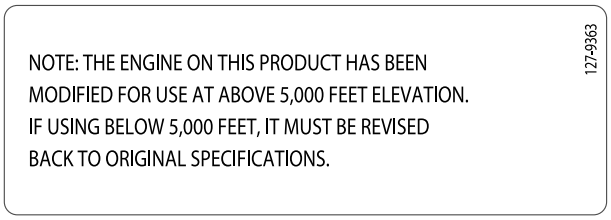

decal127-9363

⚠ WARNING

CALIFORNIA
Proposition 65 Warning

The engine exhaust from this product contains chemicals known to the State of California to cause cancer, birth defects, or other reproductive harm.

Battery posts, terminals, and related accessories contain lead and lead compounds, chemicals known to the State of California to cause cancer and reproductive harm. Wash hands after handling.

Use of this product may cause exposure to chemicals known to the State of California to cause cancer, birth defects, or other reproductive harm.

© 2026—The Toro® Company
8111 Lyndale Avenue South
Bloomington, MN 55420

Contact us at www.Toro.com.
Printed in the USA
All Rights Reserved

Introduction

This rotary-blade, riding lawn mower is intended to be used by professional, hired operators. It is designed primarily for cutting grass on well-maintained lawns on residential or commercial properties. Using this product for purposes other than its intended use could prove dangerous to you and bystanders.

Read this information carefully to learn how to operate and maintain your product properly and to avoid injury and product damage. You are responsible for operating the product properly and safely.

Visit www.Toro.com for product safety and operation training materials, accessory information, help finding a dealer, or to register your product.

Whenever you need service, genuine Toro parts, or additional information, contact an Authorized Service Dealer or Toro Customer Service and have the model and serial numbers of your product ready. Figure 1 identifies the location of the model and serial numbers on the product. Write the numbers in the space provided.

Important: **With your mobile device, you can scan the QR code on the serial number decal (if equipped) to access warranty, parts, and other product information.**

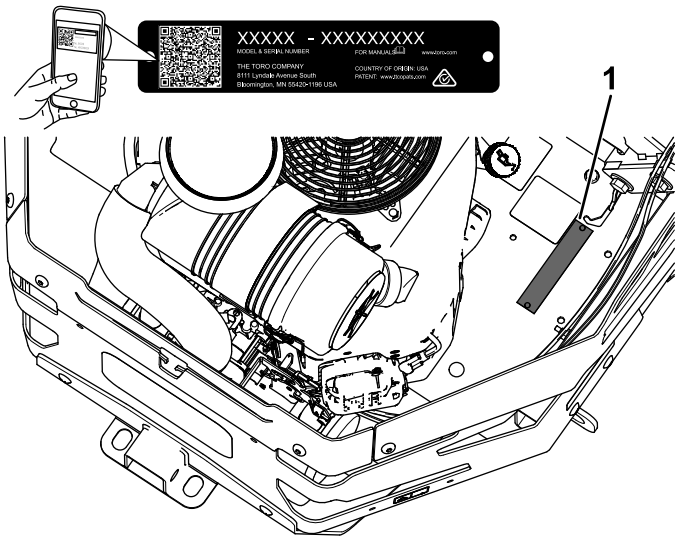

g412500

Figure 1

1. Model and serial number location

Model No. _____

Serial No. _____

This manual uses 2 words to highlight information. **Important** calls attention to special mechanical information and **Note** emphasizes general information worthy of special attention.

The safety-alert symbol (Figure 2) appears both in this manual and on the machine to identify important safety messages that you must follow to avoid accidents. This symbol will appear with the word **Danger**, **Warning**, or **Caution**.

- **Danger** indicates an imminently hazardous situation which, if not avoided, **will** result in death or serious injury.
- **Warning** indicates a potentially hazardous situation which, if not avoided, **could** result in death or serious injury.
- **Caution** indicates a potentially hazardous situation which, if not avoided, **may** result in minor or moderate injury.



sa-black

Figure 2

Safety-alert symbol

Contents

Safety 5
General Safety 5
Slope Indicator 6
Safety and Instructional Decals 7
Product Overview 12
Controls 12
Specifications 14
Attachments/Accessories 14
Before Operation 15
Before Operation Safety 15
Adding Fuel 16
Performing Daily Maintenance 16
Breaking in a New Machine 17
Using the Rollover-Protection System (ROPS) 17
Using the Safety-Interlock System 18
Positioning the Seat 19
Changing the Seat Suspension 19
Adjusting the Rear-Shock Assemblies 20
During Operation 21
During Operation Safety 21
Entering the Operator's Position 23
Operating the Parking Brake 24
Operating the Mower Blade-Control Switch (PTO) 24
Operating the Throttle 25
Operating the Choke 25
Starting the Engine 25

Shutting Off the Engine 26
Using the Motion-Control Levers 27
Driving the Machine 27
Using the Side Discharge 28
Adjusting the Height of Cut 29
Adjusting the Anti-Scalp Rollers 30
Operating Tips 31
After Operation 31
After Operation Safety 31
Using the Fuel-Shutoff Valve 32
Using the Drive-Wheel Release Valves 33
Towing a Trailer 33
Transporting the Machine 34
Maintenance 36
Maintenance Safety 36
Recommended Maintenance Schedule(s) 36
Lubrication 38
Greasing the Machine 38
Lubricating the Mower Deck-Lift Pivots 38
Greasing the Caster Pivots 38
Greasing the Caster-Wheel Hubs 39
Engine Maintenance 40
Engine Safety 40
Identifying the Engine 40
Servicing a Kawasaki® Engine 41
Servicing a Toro Engine 46
Servicing a Briggs and Stratton® Engine 50
Cleaning the Blower Housing 54
Cleaning the Engine Screen 54
Cleaning the Cooling System 54
Checking the Spark Arrester 55
Replacing the Emissions-Air Intake Filter 55
Fuel System Maintenance 56
Replacing the Fuel Filter 56
Servicing the Fuel Tank 56
Electrical System Maintenance 57
Electrical System Safety 57
Servicing the Battery 57
Servicing the Fuses 59
Drive System Maintenance 60
Checking the Seat Belt 60
Adjusting the Tracking 60
Checking the Tire Pressure 61
Checking the Wheel Lug Nuts 61
Brake Maintenance 61
Adjusting the Parking Brake 61
Belt Maintenance 63
Inspecting the Belts 63
Replacing the Mower Belt 63
Replacing the Hydraulic Pump-Drive Belt 64
Controls System Maintenance 65
Adjusting the Control-Handle Position 65
Adjusting the Motion-Control Linkage 66
Hydraulic System Maintenance 67
Hydraulic System Safety 67
Hydraulic-Fluid Specifications 67
Checking the Hydraulic-Fluid Level 67
Changing the Hydraulic Fluid and Filters 68
Bleeding the Hydraulic System 69
Mower Deck Maintenance 70
Blade Safety 70
Servicing the Cutting Blades 70
Adjusting the Side-to-Side Leveling and the Blade Slope 73
Removing the Mower Deck 75
Replacing the Grass Deflector 75
Cleaning 76
Cleaning under the Mower Deck 76
Cleaning the Suspension System 76
Disposing of Waste 76
Storage 77
Storage Safety 77
Cleaning and Storage 77
Troubleshooting 78
Schematics 81

Safety

General Safety

This product is capable of amputating hands and feet and of throwing objects. Always follow all safety instructions to avoid serious personal injury or death.

- Read and understand the contents of this *Operator's Manual* before starting the engine.
- Keep bystanders and children away.
- Do not allow children or untrained people to operate or service the machine. Allow only people who are responsible, trained, familiar with the instructions, and physically capable to operate or service the machine.
- Always keep the roll bar in the fully raised and locked position and use the seat belt.
- Do not operate the machine near drop-offs, ditches, embankments, water, or other hazards, or on slopes greater than 15°.
- Do not put your hands or feet near moving components of the machine.
- Do not operate the machine without all guards, safety switches, and other safety protective devices in place and functioning properly.
- Shut off the engine, remove the key, and wait for all moving parts to stop before leaving the operator's position. Allow the machine to cool before servicing, adjusting, fueling, cleaning, or storing it.

Slope Indicator

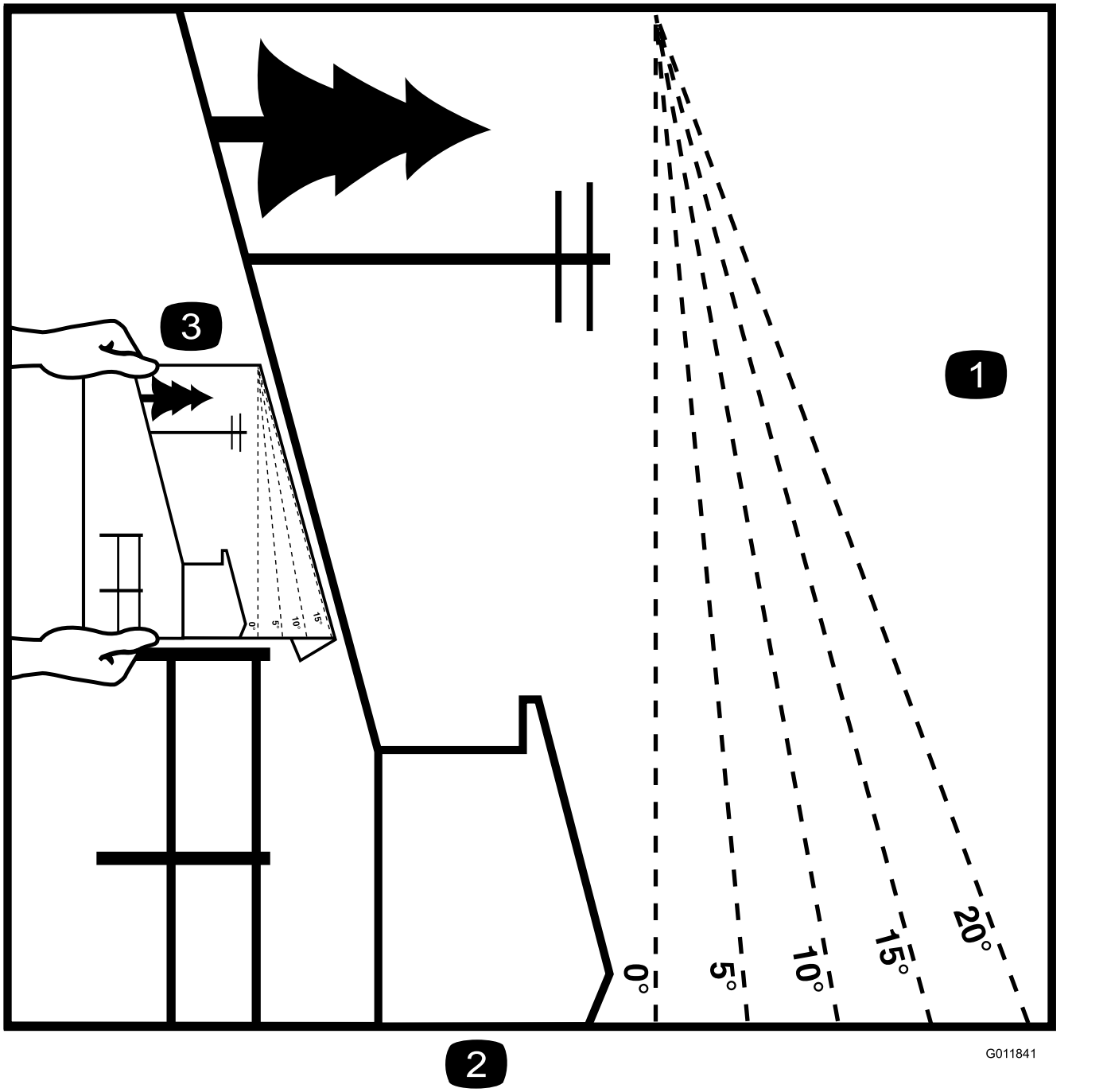

Figure 4

You may copy this page for personal use.

1. The maximum slope you can operate the machine on is **15 degrees**. Use the slope chart to determine the degree of slope of hills before operating. **Do not operate this machine on a slope greater than 15 degrees.** Fold along the appropriate line to match the recommended slope.
2. Align this edge with a vertical surface, a tree, building, fence pole, etc.
3. Example of how to compare slope with folded edge

Safety and Instructional Decals

Safety decals and instructions are easily visible to the operator and are located near any area of potential danger. Replace any decal that is damaged or missing.

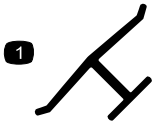

decaloemmarkt

Manufacturer's Mark

1. This mark indicates that the blade is identified as a part from the original machine manufacturer.



decalbatterysymbols

Battery Symbols

Some or all of these symbols are on your battery.

1. Explosion hazard
2. No fire, open flame, or smoking
3. Caustic liquid/chemical burn hazard
4. Wear eye protection.
5. Read the *Operator's Manual*.
6. Keep bystanders away from the battery.
7. Wear eye protection; explosive gases can cause blindness and other injuries.
8. Battery acid can cause blindness or severe burns.
9. Flush eyes immediately with water and get medical help fast.
10. Contains lead; do not discard

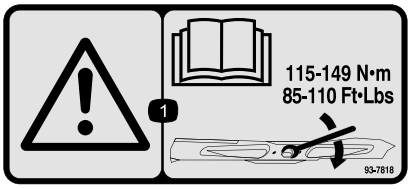

decal93-7818

93-7818

1. Warning—read the *Operator's Manual* for instructions on torquing the blade bolt/nut to 115 to 149 N·m (85 to 110 ft-lb).



decal106-5517

106-5517

1. Warning—do not touch the hot surface.

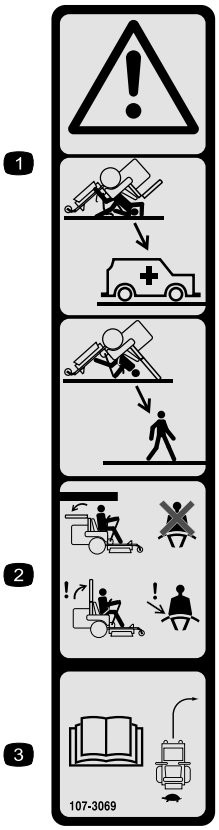

decal107-3069

107-3069

1. Warning—there is no rollover protection when the roll bar is down.
2. To avoid injury or death from a rollover accident, keep the roll bar in the fully raised and locked position and wear the seat belt. Lower the roll bar only when absolutely necessary; do not wear the seat belt when the roll bar is down.
3. Read the *Operator's Manual*; drive slowly and carefully.

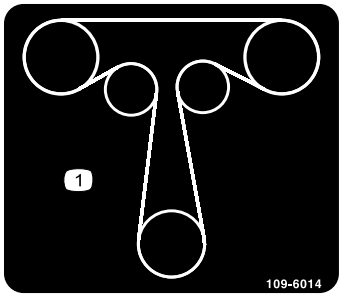

decal109-6014

109-6014

1. Traction belt routing

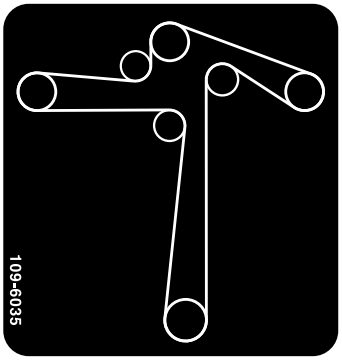

decal109-6035

109-6035

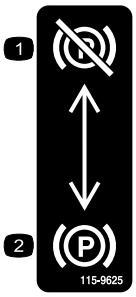

decal115-9625

115-9625

1. Parking brake—disengaged
2. Parking brake—engaged

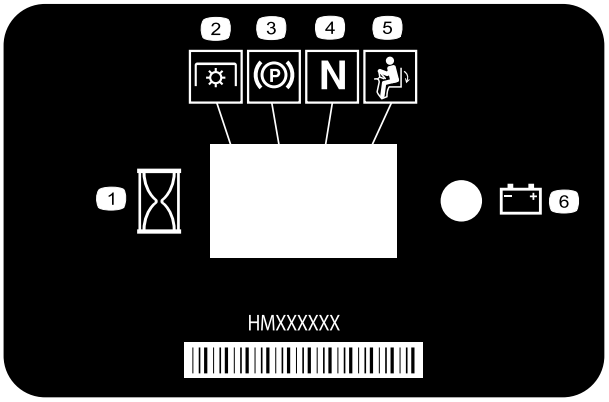

decal116-5610

116-5610

1. Hour meter
2. Power take-off (PTO)
3. Parking brake
4. Neutral
5. Operator presence switch
6. Battery

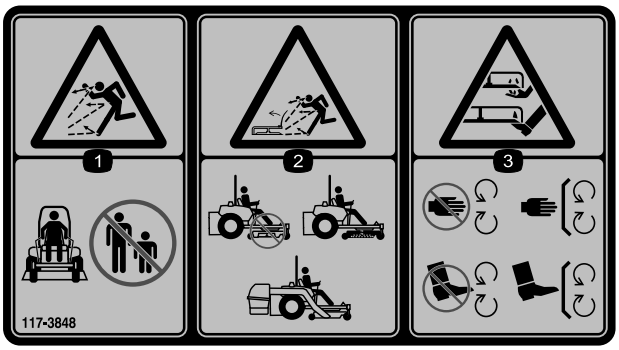

decal117-3848

117-3848

1. Thrown object hazard—keep bystanders away.
2. Thrown object hazard, raised deflector—do not operate without the deflector, discharge cover, or grass collection system in place.
3. Cutting/dismemberment hazard of hand or foot, mower blade—stay away from moving parts; keep all guards and shields in place.

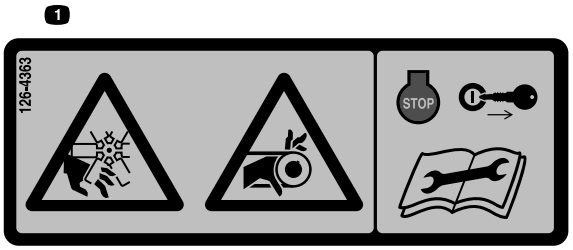

decal126-4363

126-4363

1. Cutting/dismemberment hazard, fan and entanglement hazard, belt. Shut off the engine and remove the key before adjusting, servicing or cleaning the machine.

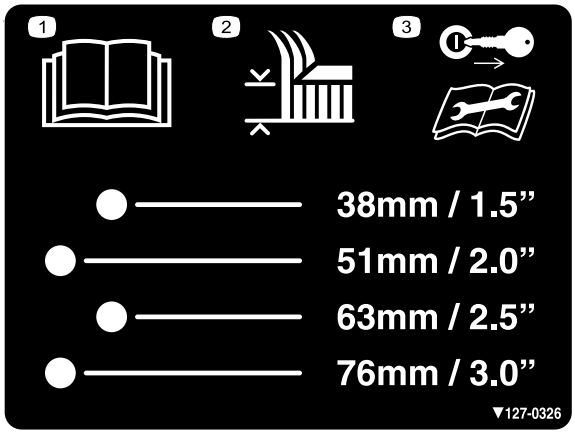

decal127-0326

127-0326

1. Read the *Operator's Manual*.
2. Height of cut
3. Remove the key and read the *Operator's Manual* before performing maintenance.



decal133-8062

133-8062

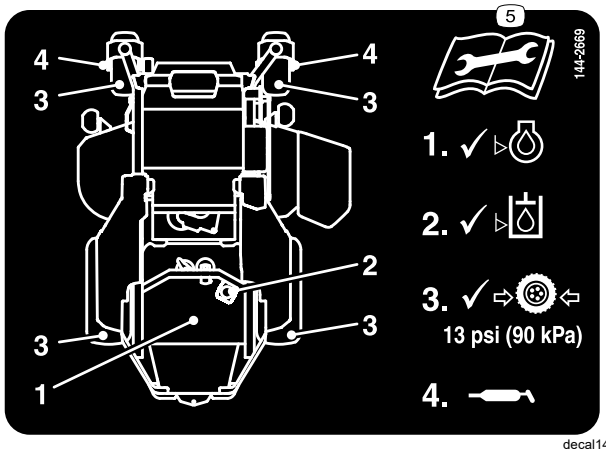

decal144-2669

144-2669

1. Check the engine-oil level.
2. Check the hydraulic-fluid level.
3. Check the tire pressure.
4. Grease the caster wheel.
5. Read the *Operator's Manual* before performing maintenance.

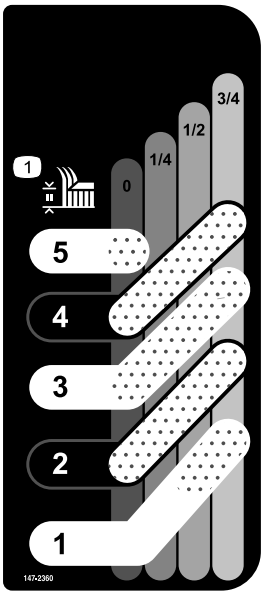

decal147-2360

147-2360

1. Height of cut

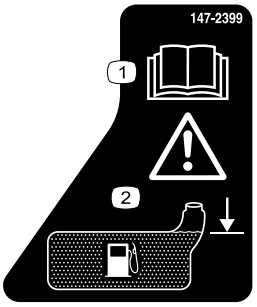

decal147-2399

147-2399

1. Read the *Operator's Manual*.
2. Warning—Fill to bottom of filler neck; warning–do not overfill the tank

---

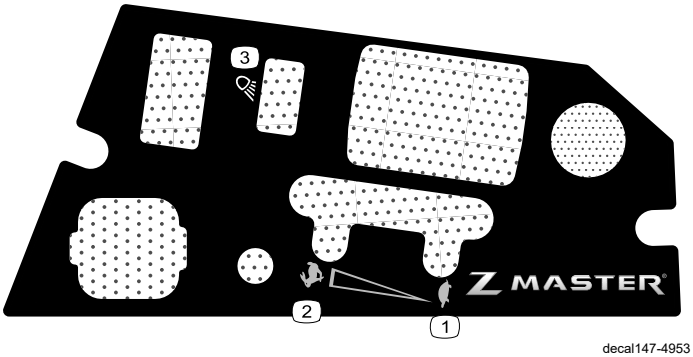

decal147-4953

147-4953

1. Slow
2. Fast
3. Worklight

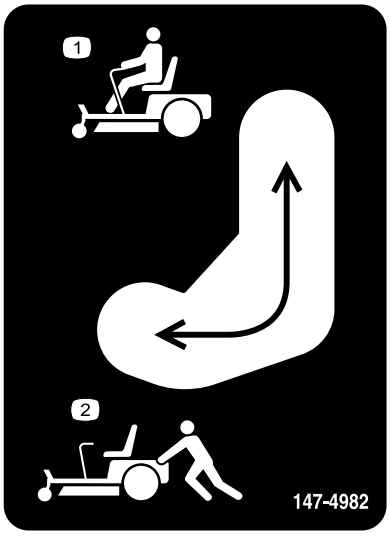

decal147-4982

147-4982

1. Drive position
2. Bypass position

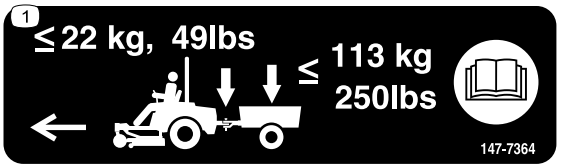

decal147-7364

147-7364

1. Do not exceed a tongue weight of 22 kg (49 lb); do not exceed a gross towing weight of 113 kg (250 lb); read the *Operator's Manual*.

Decal 131-1097 is for Toro engines only.

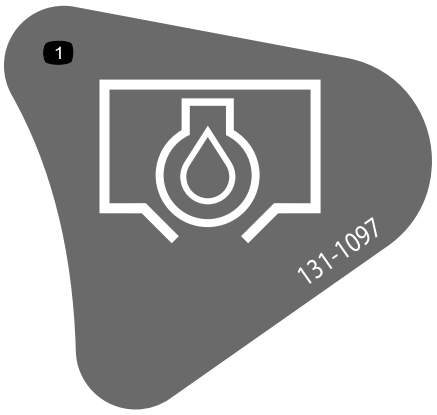

decal131-1097

131-1097

1. Oil drain

Decal 126-8383 is for non-Myride machines only.

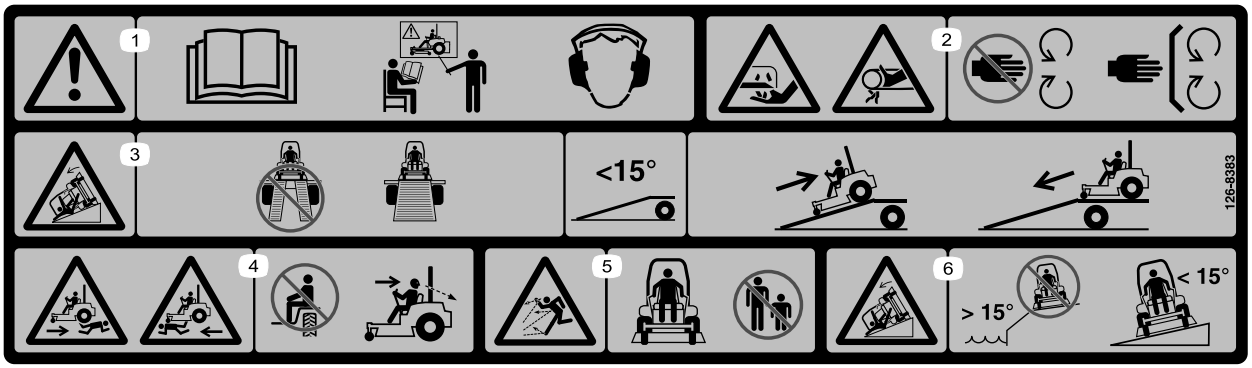

decal126-8383

126-8383

Note: This machine complies with the industry standard stability test in the static lateral and longitudinal tests with the maximum recommended slope indicated on the decal. Review the instructions for operating the machine on slopes in the *Operator's Manual* as well as the conditions in which you would operate the machine to determine whether you can operate the machine in the conditions on that day and at that site. Changes in the terrain can result in a change in slope operation for the machine.

1. Warning—read the *Operator's Manual*; do not operate this machine unless you are trained; wear hearing protection.
2. Cutting/dismemberment hazard of the hand, mower blade; entanglement hazard of the hand, belt—stay away from moving parts; keep all guards and shields in place.
3. Ramp hazard—do not use dual ramps when loading onto a trailer; use 1 ramp wide enough for the machine; use a ramp with a slope less than 15°; back up the ramp when loading the machine and drive forward off the ramp when unloading.
4. Runover/backover hazard—do not carry passengers; look behind you when mowing in reverse.
5. Thrown object hazard—keep bystanders away.
6. Tipping hazard—do not use the machine near drop-offs or on slopes greater than 15°; only operate across slopes less than 15°.

Decal 132-0871 is for machines with MyRide only.

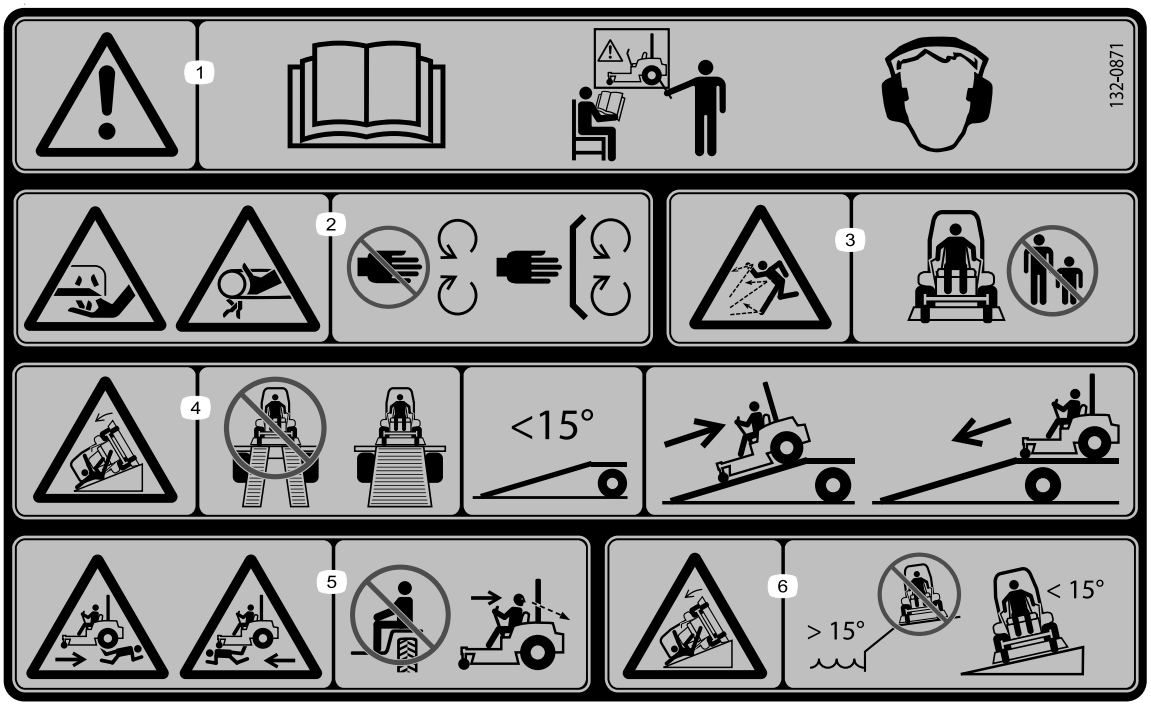

decal132-0871

132-0871

Note: This machine complies with the industry standard stability test in the static lateral and longitudinal tests with the maximum recommended slope indicated on the decal. Review the instructions for operating the machine on slopes in the *Operator's Manual* as well as the conditions in which you would operate the machine to determine whether you can operate the machine in the conditions on that day and at that site. Changes in the terrain can result in a change in slope operation for the machine.

1. Warning—read the *Operator's Manual*; all operators should be trained before operating the machine; wear hearing protection.
2. Cutting/dismemberment hazard of hand—stay away from moving parts; keep all guards and shields in place.
3. Thrown object hazard—keep bystanders away.
4. Tipping hazard—do not use dual ramps when loading onto a trailer; use 1 ramp wide enough for the machine; use a ramp with a slope less than 15°; back up the ramp (in reverse) and drive forward off the ramp.
5. Runover hazard—do not carry passengers; look behind you when moving in reverse.
6. Tipping hazard—do not use the machine near drop-offs or on slopes greater than 15°; only operate across slopes less than 15°.

Decal 132-5067 is for machines with MyRide only.



decal132-5067

132-5067

Product Overview

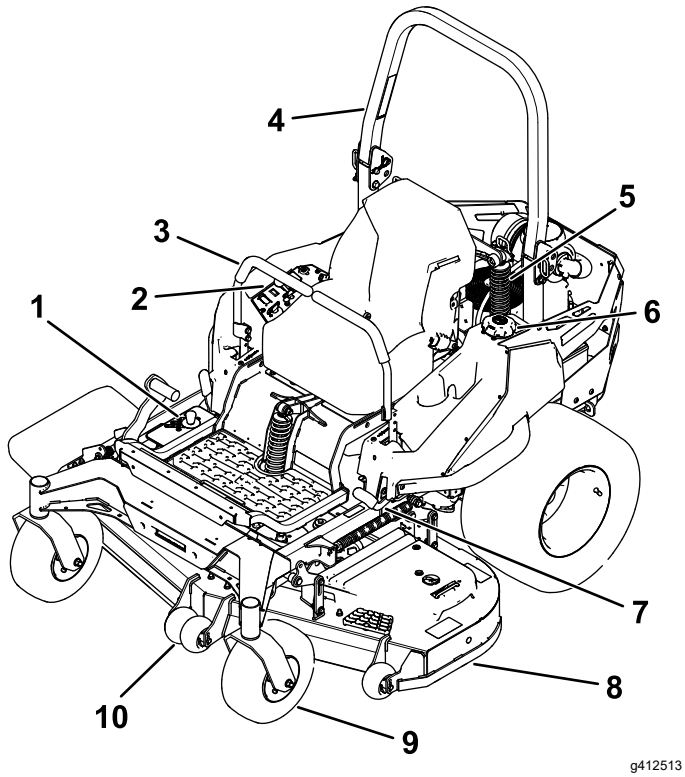

Figure 5

1. Height-of-cut positions
2. Controls
3. Motion-control levers
4. Roll bar
5. Shock assembly (machines with MyRide only)
6. Fuel cap
7. Parking-brake lever
8. Mower deck
9. Caster wheel
10. Anti-scalp roller

Controls

Become familiar with all the controls before you start the engine and operate the machine.

Control Panel

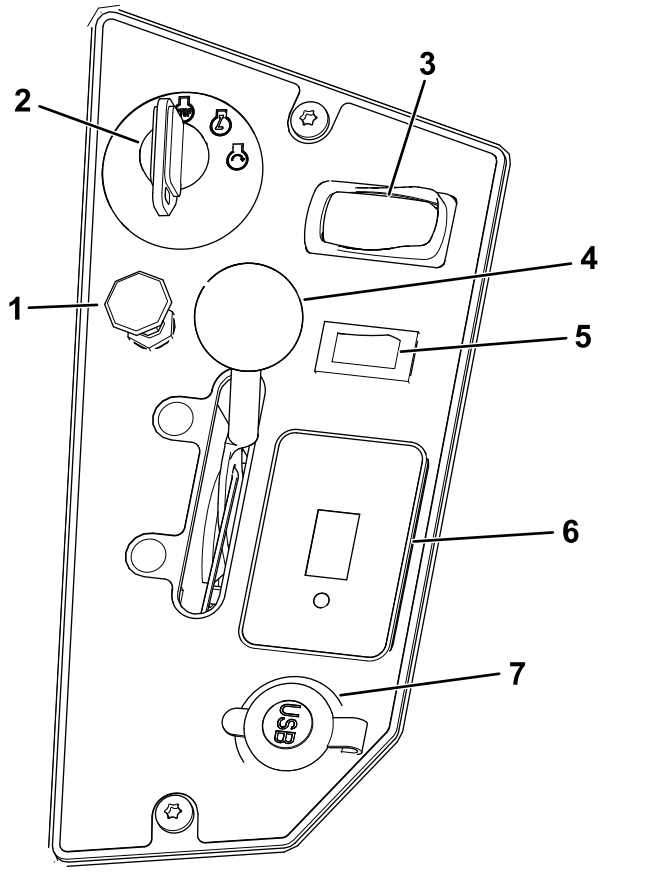

Figure 6

1. Choke control (for carbureted models only)
2. Key switch
3. Blade-control switch (power takeoff)
4. Throttle control
5. Light switch (for models with lights only)—optional kit for other models
6. Hour meter
7. USB power point

Key Switch

The key switch, used to start and shut off the engine, has 3 positions: OFF, RUN, and START. Refer to Starting the Engine (page 25).

USB Power Point

Use the power point (Figure 6) to power mobile devices.

Light Switch

For Models with Lights Only

Use the light switch to turn the lights to the ON position or OFF position (Figure 6).

Choke Control

Use the choke control to start a cold engine.

Throttle Control

The throttle controls the engine speed, and it has a continuous-variable setting from the SLOW to FAST position (Figure 6).

Blade-Control Switch (Power Takeoff)

The blade-control switch, represented by a power-takeoff (PTO) symbol, engages and disengages power to the mower blades (Figure 6).

Hour Meter

The hour meter records the number of hours the engine has operated. It operates when the engine is running. Use these times for scheduling regular maintenance (Figure 7).

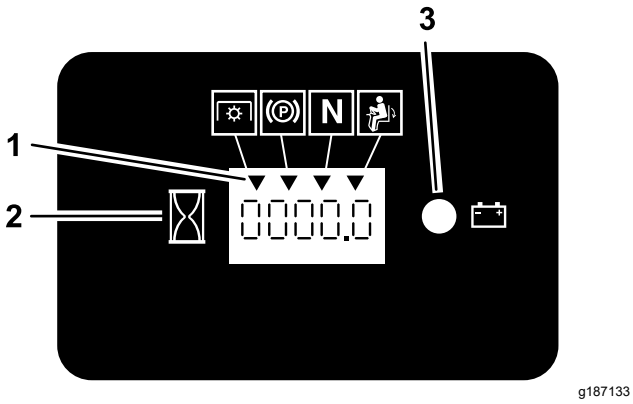

Figure 7

1. Safety-interlock symbols
2. Hour meter
3. Battery light

Safety-Interlock Indicators

There are symbols on the hour meter that indicate with a black triangle that the interlock component is positioned correctly (Figure 7).

Battery-Indicator Light

If you turn the key switch to the ON position for a few seconds, the battery voltage displays in the area where the hours are normally displayed.

The battery light turns on when the key switch is turned on and when the charge is below the correct operating level (Figure 7).

Electronic-Control Unit Malfunction-Indicator Light

For Models with an EFI Engine Only

The electronic-control unit (ECU) continuously monitors the operation of the EFI system.

If a problem or fault within the system is detected, the malfunction-indicator light (MIL) illuminates.

The MIL is the red light located in the right console panel.

Once the MIL illuminates, make initial troubleshooting checks; refer to the MIL section under Troubleshooting (page 78).

If these checks do not correct the problem, further diagnosis and servicing by an Authorized Service Dealer is necessary.

Motion-Control Levers

Use the motion-control levers to drive the machine forward, reverse, and turn either direction (Figure 5).

Neutral-Lock Position

Move the motion-control levers outward from the center to the NEUTRAL-LOCK position when exiting the machine (Figure 29). Always position the motion-control levers into the NEUTRAL-LOCK position when you stop the machine or leave it unattended.

Parking-Brake Lever

Whenever you shut off the engine, engage the parking brake to prevent accidental movement of the machine.

Fuel-Shutoff Valve

Close the fuel-shutoff valve when transporting or storing the machine; refer to Using the Fuel-Shutoff Valve (page 32).

Specifications

Note: Specifications and design are subject to change without notice.

Width

	48-inch Deck	52-inch Deck	60-inch Deck
Without mower deck	129 cm (51 inches)	137 cm (53-15/16 inches)	141 cm (55-1/2 inches)
Deflector up	142 cm (56 inches)	147 cm (57-11/16 inches)	163 cm (64-1/4 inches)
Deflector down	160 cm (63-1/8 inches)	171 cm (67-3/16 inches)	191 cm (75-1/4 inches)
Deflector removed	132 cm (52-1/8 inches)	141 cm (55-5/8 inches)	156 cm (61-5/8 inches)

Length

48-inch Deck	52-inch Deck	60-inch Deck
220 cm (86-1/2 inches)	220 cm (86-1/2 inches)	220 cm (86-1/2 inches)

Height

	48-inch Deck	52-inch Deck	60-inch Deck
Roll Bar—Up	182 cm (71-5/8 inches)	185 cm (73 inches)	182 cm (71-5/8 inches)
Roll Bar—Down (MyRide)	126 cm (49-1/2 inches)	126 cm (49-1/2 inches)	126 cm (49-1/2 inches)
Roll Bar—Down (Non-MyRide)	118 cm (46-3/8 inches)	118 cm (46-3/8 inches)	118 cm (46-3/8 inches)

Weight

48-inch machines	52-inch machines	60-inch machines
445 kg (982 lb)	455 to 491 kg (1,004 to 1,082 lb)	481 to 510 kg (1,060 to 1,125 lb)

Towing Capacity

Tongue Weight	Gross Towing Weight *
22 kg (49 lb)	113 kg (250 lb)

***** The total weight of the object being towed (e.g., trailer and payload, pull-behind dethatcher, aerator, etc.)

Attachments/Accessories

A selection of Toro approved attachments and accessories is available for use with the machine to enhance and expand its capabilities. Contact your Authorized Service Dealer or authorized Toro distributor or go to www.Toro.com for a list of all approved attachments and accessories.

To ensure optimum performance and continued safety certification of the machine, use only genuine Toro replacement parts and accessories. Replacement parts and accessories made by other manufacturers could be dangerous, and such use could void the product warranty.

Operation

Note: Determine the left and right sides of the machine from the normal operating position.

Before Operation

Before Operation Safety

General Safety

- Do not allow children or untrained people to operate or service the machine. Local regulations may restrict the age of the operator. The owner is responsible for training all operators and mechanics.
- Inspect the area where you will use the machine, and remove all objects that could interfere with the operation of the machine or that the machine could throw.
- Become familiar with the safe operation of the equipment, operator controls, and safety signs.
- Check that operator-presence controls, safety switches, and guards are attached and working properly. Do not operate the machine unless they are functioning properly.
- Shut off the engine, remove the key, and wait for all moving parts to stop before leaving the operator's position. Allow the machine to cool before servicing, adjusting, fueling, cleaning, or storing it.
- Before mowing, inspect the machine to ensure that the cutting assemblies are working properly.
- Evaluate the terrain to determine the appropriate equipment and any attachments or accessories required to operate the machine properly and safely.
- Wear appropriate clothing, including eye protection; long pants; substantial, slip-resistant footwear; and hearing protection. Tie back long hair and do not wear loose clothing or loose jewelry.
- Do not carry passengers on the machine.
- Keep bystanders and pets away from the machine during operation. Shut off the machine and attachment(s) if anyone enters the area.
- Do not operate the machine unless all guards and safety devices, such as the deflectors and the entire grass catcher, are in place and functioning properly. Replace worn or deteriorated parts when necessary.

Fuel Safety

- Fuel is extremely flammable and highly explosive. A fire or explosion from fuel can burn you and others and can damage property.
  - To prevent a static charge from igniting the fuel, remove the machine from the truck or trailer and refuel it on the ground, away from all vehicles. If this is not possible, place a portable fuel container on the ground, away from all vehicles, and fill it; then refuel the machine from the fuel container rather than from a fuel-dispenser nozzle.
  - Fill the fuel tank outdoors on level ground, in an open area, and when the engine is cold. Wipe up any fuel that spills.
  - Do not handle fuel when smoking or around an open flame or sparks.
  - Do not remove the fuel cap or add fuel to the tank while the engine is running or hot.
  - If you spill fuel, do not attempt to start the engine. Avoid creating a source of ignition until the fuel vapors have dissipated.
  - Store fuel in an approved container and keep it out of the reach of children.
- Fuel is harmful or fatal if swallowed. Long-term exposure to vapors can cause serious injury and illness.
  - Avoid prolonged breathing of vapors.
  - Keep your hands and face away from the nozzle and the fuel-tank opening.
  - Keep fuel away from your eyes and skin.
- Do not store the machine or fuel container where there is an open flame, spark, or pilot light, such as on a water heater or on other appliances.
- Do not operate the machine without the entire exhaust system in place and in proper working condition.
- Keep the fuel-dispenser nozzle in contact with the rim of the fuel tank or container opening at all times until fueling is complete. Do not use a nozzle lock-open device.
- If you spill fuel on your clothing, change your clothing immediately.
- Do not overfill the fuel tank. Replace the fuel cap and tighten it securely.
- Clean grass and debris from the cutting unit, muffler, drives, grass catcher, and engine compartment to help prevent fires. Clean up oil or fuel spills.

Adding Fuel

Recommended Fuel

- For best results, use only clean, fresh (less than 30 days old), unleaded gasoline with an octane rating of 87 or higher ((R+M)/2 rating method).
- **Ethanol**: Gasoline with up to 10% ethanol (gasohol) or 15% MTBE (methyl tertiary butyl ether) by volume is acceptable. Ethanol and MTBE are not the same. Gasoline with 15% ethanol (E15) by volume is not approved for use. **Never use gasoline that contains more than 10% ethanol by volume**, such as E15 (contains 15% ethanol), E20 (contains 20% ethanol), or E85 (contains up to 85% ethanol). Using unapproved gasoline may cause performance problems and/or engine damage which may not be covered under warranty.
- **Do not** use gasoline containing methanol.
- **Do not** store fuel either in the fuel tank or fuel containers over the winter unless you use a fuel stabilizer.
- **Do not** add oil to gasoline.

Using Stabilizer/Conditioner

Use a fuel stabilizer/conditioner in the machine to provide the following benefits:

- Keeps fuel fresh longer when used as directed by the fuel-stabilizer manufacturer
- Cleans the engine while it runs
- Eliminates gum-like varnish buildup in the fuel system, which causes hard starting

Important: **Do not use fuel additives containing methanol or ethanol.**

Add the correct amount of fuel stabilizer/conditioner to the fuel.

Note: A fuel stabilizer/conditioner is most effective when mixed with fresh fuel. To minimize the chance of varnish deposits in the fuel system, use fuel stabilizer at all times.

Filling the Fuel Tank

1. Park the machine on a level surface.
2. Engage the parking brake.
3. Shut off the engine and remove the key.
4. Clean around the fuel-tank cap.
5. Fill the fuel tank to the bottom of the filler neck (Figure 8).

Note: Do not fill the fuel tank completely full. The empty space in the tank allows the fuel to expand.

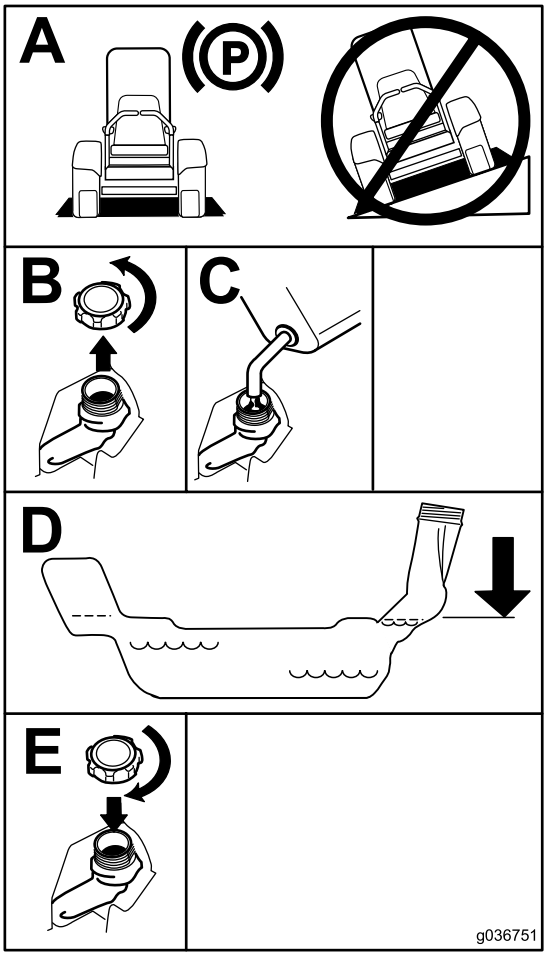

g036751

Figure 8

Performing Daily Maintenance

Before starting the machine each day, perform the Each Use/Daily procedures listed in Maintenance (page 36).

Breaking in a New Machine

New engines take time to develop full power. Mower decks and drive systems have higher friction when new, placing additional load on the engine. Allow 40 to 50 hours of break-in time for new machines to develop full power and best performance.

Using the Rollover-Protection System (ROPS)

⚠ WARNING

To avoid injury or death from rollover, keep the roll bar in the fully raised, locked position and use the seat belt.

Ensure that the seat is secured to the machine.

⚠ WARNING

There is no rollover protection when the roll bar is in the down position.

- **Lower the roll bar only when absolutely necessary.**
- **Do not wear the seat belt when the roll bar is in the down position.**
- **Drive slowly and carefully.**
- **Raise the roll bar as soon as clearance permits.**
- **Check carefully for overhead clearances (i.e., branches, doorways, electrical wires) before driving under any objects and do not contact them.**

Lowering the Roll Bar

Important: **Lower the roll bar only when absolutely necessary.**

1. For both sides of the roll bar, remove the hairpin cotter and pin.
2. Lower the roll bar to the down position.

   Note: There are 2 down positions, as shown in Figure 10.
3. Install the 2 pins and secure them with the hairpin cotters.

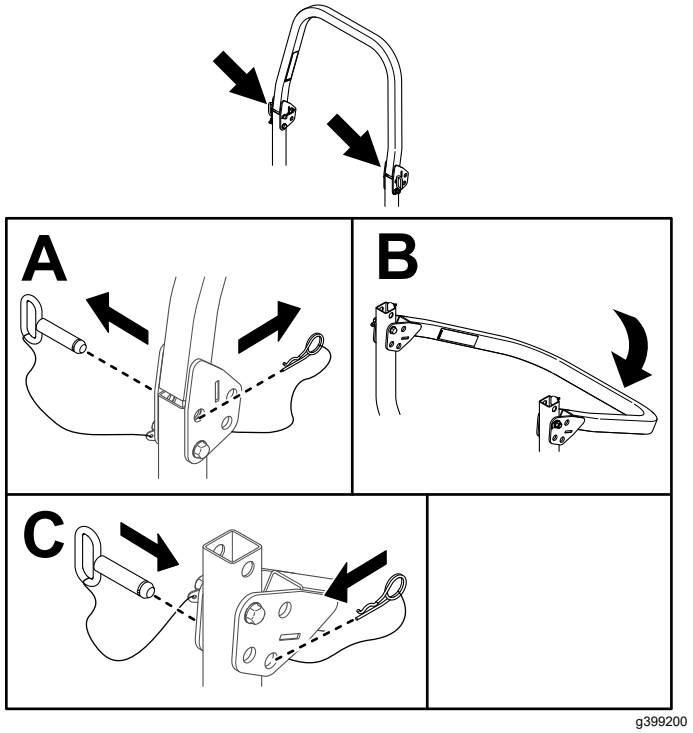

Figure 9

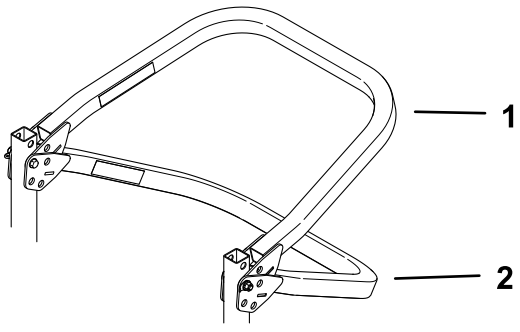

Figure 10

1. Down position with the bagger installed
2. Full down position

Raising the Roll Bar

Important: **Always use the seat belt with the roll bar in the raised position.**

1. Remove the hairpin cotters and remove the 2 pins.
2. Raise the roll bar to the upright position.
3. Install the 2 pins, and secure them with the hairpin cotters.

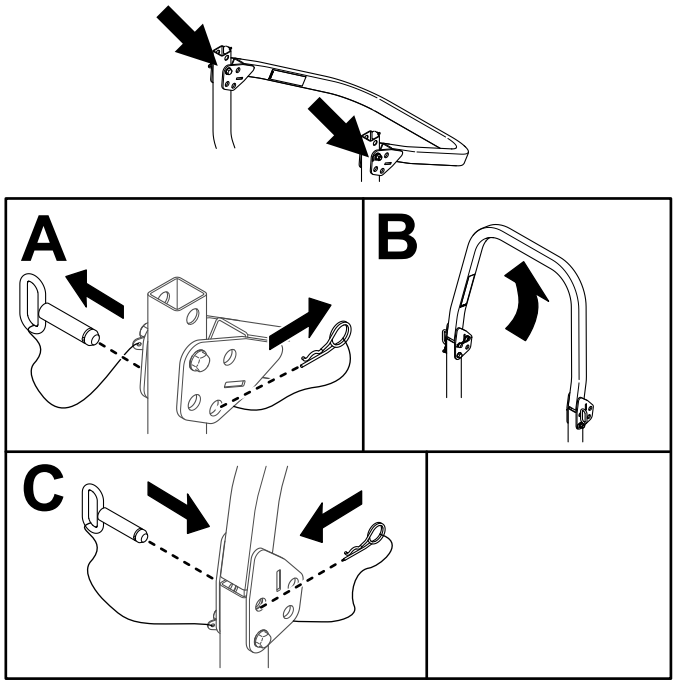

g399201

Figure 11

Using the Safety-Interlock System

⚠ WARNING

If the safety-interlock switches are disconnected or damaged, the machine could operate unexpectedly, causing personal injury.

- **Do not tamper with the interlock switches.**
- **Check the operation of the interlock switches daily and replace any damaged switches before operating the machine.**

Understanding the Safety-Interlock System

The safety-interlock system is designed to prevent the engine from starting unless the following occurs:

- The parking brake is engaged.
- The blade-control switch (PTO) is disengaged.
- The motion-control levers are in the NEUTRAL-LOCK position.

The safety-interlock system also is designed to shut off the engine when the motion-control levers are moved from the NEUTRAL-LOCK position with the parking brake engaged or if you rise from the seat when the PTO is engaged.

The hour meter has indicators to notify the user when the interlock component is in the correct position. When the component is in the correct position, an indicator displays on the screen.

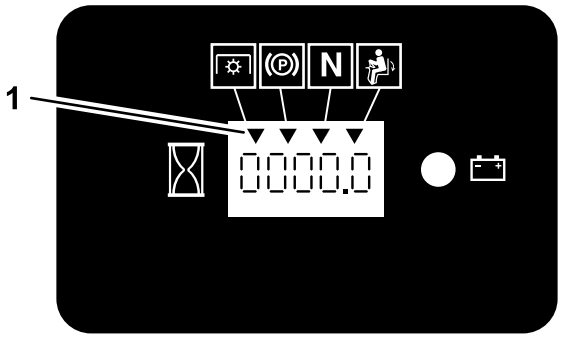

g187670

Figure 12

1. Indicators display when the interlock components are in the correct position

Testing the Safety-Interlock System

Service Interval: Before each use or daily

Test the safety-interlock system before you use the machine each time. If the safety system does not operate as described below, have an Authorized Service Dealer repair the safety system immediately.

1. Sit on the seat, engage the parking brake, and move the blade-control switch (PTO) to the ON position. Try starting the engine; the engine should not start.
2. Sit on the seat, engage the parking brake, and move the blade-control switch (PTO) to the OFF position. Move either motion-control lever out of the NEUTRAL-LOCK position. Try starting the engine; the engine should not start. Repeat for the other control lever.
3. Sit on the seat, engage the parking brake, move the blade-control switch (PTO) to the OFF position, and move the motion-control levers to the NEUTRAL-LOCK position. Now start the engine. While the engine is running, disengage the parking brake, engage the blade-control switch (PTO), and rise slightly from the seat; the engine should shut off.
4. Sit on the seat, engage the parking brake, move the blade-control switch (PTO) to the OFF position, and move the motion-control levers to the NEUTRAL-LOCK position. Now start the engine. While the engine is running, center either motion control and move (forward or reverse); the engine should shut off. Repeat for other motion control.
5. Sit on the seat, disengage the parking brake, move the blade-control switch (PTO) to the OFF position, and move the motion-control levers to the NEUTRAL-LOCK position. Try starting the engine; the engine should not start.

Positioning the Seat

The seat can move forward and backward (Figure 13). Position the seat where you have the best control of the machine and are most comfortable.

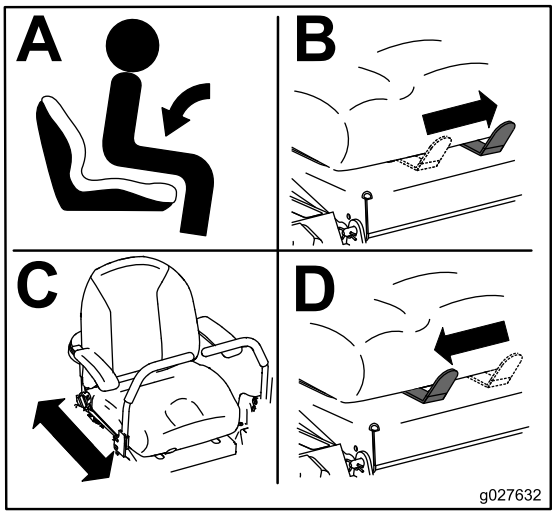

g027632

Figure 13

Seat for machines with MyRide shown.

Changing the Seat Suspension

Machines without MyRide™ Suspension System Only

The seat is adjustable to provide a smooth and comfortable ride. Position the seat where you are most comfortable.

To adjust it, turn the knob in front either direction to provide the best comfort (Figure 14).

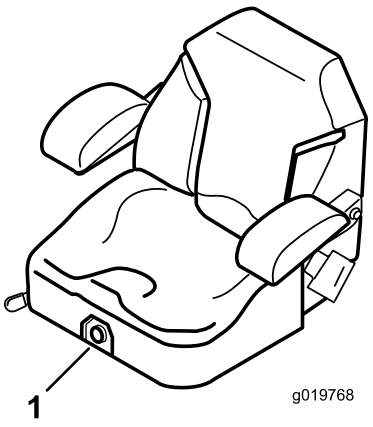

g019768

Figure 14

1. Seat-suspension knob

Adjusting the Rear-Shock Assemblies

Machines with MyRide™ Suspension System Only

The MyRide™ suspension system adjusts to provide a smooth and comfortable ride. You can adjust the rear 2-shock assemblies to quickly and easily change the suspension system. Position the suspension system where you are most comfortable.

The slots for the rear-shock assemblies have detent positions for reference. You can position the rear-shock assemblies anywhere in the slot, not just in the detent positions. The following graphic shows the position for a soft or firm ride and the different detent positions (Figure 15).

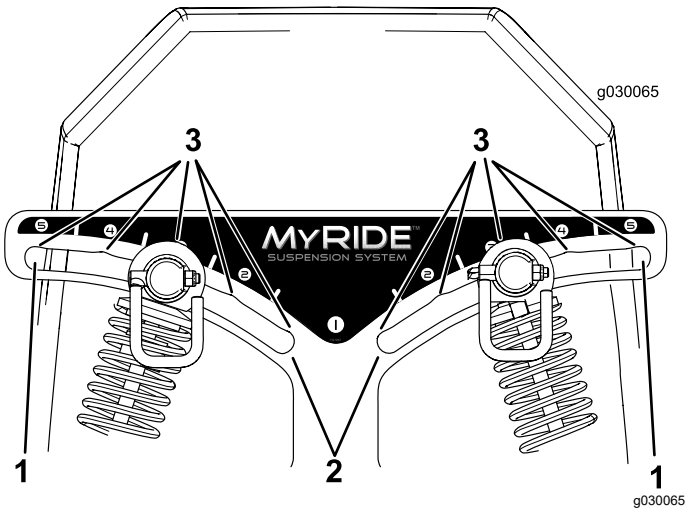

Figure 15

1. Firmest position
2. Softest position
3. Detents in the slots

Note: Ensure that the left and right rear-shock assemblies are always adjusted to the same positions.

Adjust the rear-shock assemblies (Figure 16).

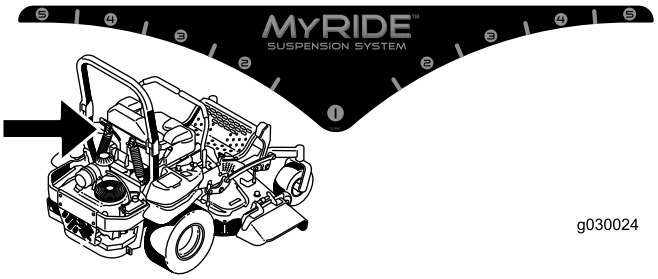

g030024

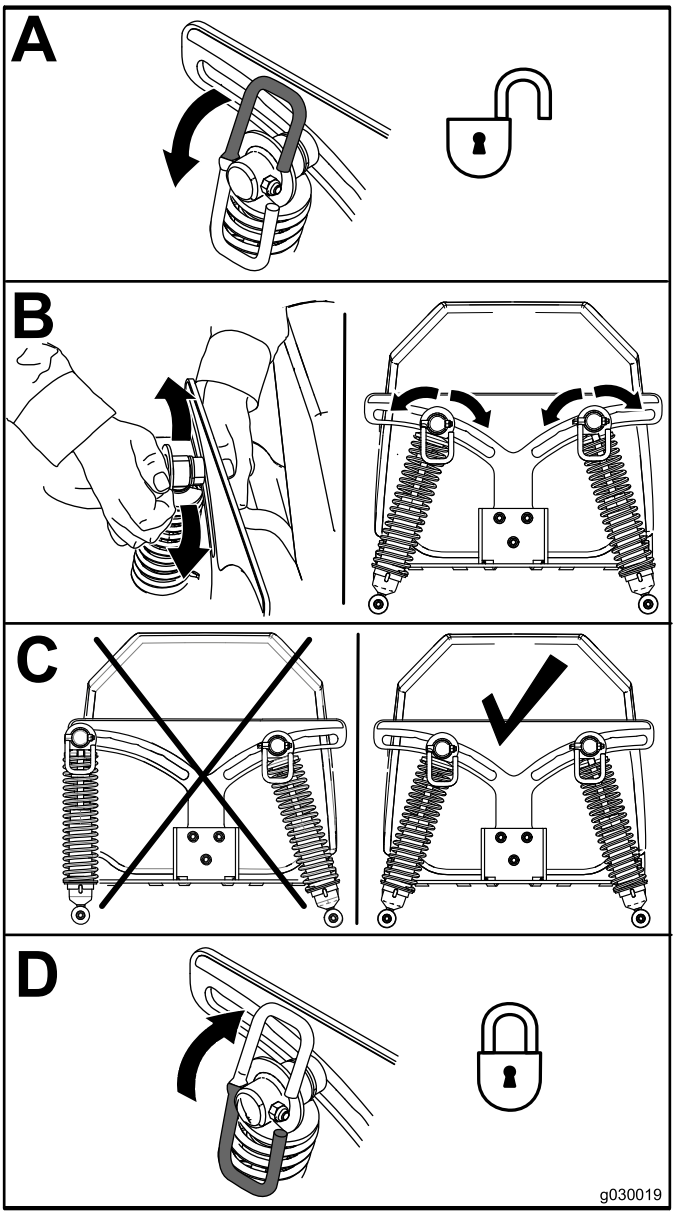

g030019

Figure 16

During Operation

During Operation Safety

General Safety

- The owner/operator can prevent and is responsible for accidents that may cause personal injury or property damage.
- Use your full attention while operating the machine. Do not engage in any activity that causes distractions; otherwise, injury or property damage may occur.
- Do not operate the machine while ill, tired, or under the influence of alcohol or drugs.
- Contacting the blade can result in serious personal injury. Shut off the engine, remove the key, and wait for all moving parts to stop before leaving the operating position. When you turn the key to the OFF position, the engine should shut off and the blade should stop. If not, stop using your machine immediately and contact an Authorized Service Dealer.
- Operate the machine only in good visibility and appropriate weather conditions. Do not operate the machine when there is the risk of lightning.
- Keep your hands and feet away from the cutting units. Keep clear of the discharge opening.
- Do not mow with the discharge deflector raised, removed, or altered unless there is a grass-collection system or mulch kit in place and working properly.
- Do not mow in reverse unless it is absolutely necessary. Always look down and behind you before moving the machine in reverse.
- Use extreme care when approaching blind corners, shrubs, trees, or other objects that may block your view.
- Stop the blades whenever you are not mowing.
- If the machine strikes an object or starts to vibrate, immediately shut off the engine, remove the key (if equipped), and wait for all moving parts to stop before examining the machine for damage. Make all necessary repairs before resuming operation.
- Slow down and use caution when making turns and crossing roads and sidewalks with the machine. Always yield the right-of-way.
- Before you leave the operating position, do the following:
  - Park the machine on a level surface.
  - Disengage the power takeoff and lower the attachments.
  - Engage the parking brake.
  - Shut off the engine and remove the key.
  - Wait for all moving parts to stop.
- Operate the engine only in well-ventilated areas. Exhaust gases contain carbon monoxide, which is lethal if inhaled.
- Never leave a running machine unattended.
- Attach towed equipment to the machine only at the hitch point.
- Do not operate the machine unless all guards and safety devices, such as the deflectors and the entire grass catcher, are in place and functioning properly. Replace worn or deteriorated parts when necessary.
- Use only accessories and attachments approved by Toro.
- This machine produces sound levels in excess of 85 dBA at the operator's ear and can cause hearing loss through extended periods of exposure.

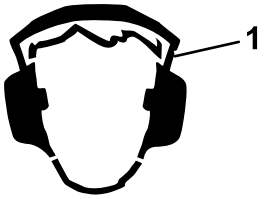

g229846

Figure 17

1. Wear hearing protection.

- Clean grass and debris from the cutting unit, drives, muffler, and engine to help prevent fires.
- Start the engine with your feet well away from the blades.
- Be aware of the mower discharge path and direct the discharge away from others. Avoid discharging material against a wall or obstruction because the material may ricochet back toward you.
- Stop the blades, slow down the machine, and use caution when crossing surfaces other than grass or when transporting the machine to and from the operating area.
- Do not change the engine governor speed or overspeed the engine.
- Children are often attracted to the machine and the mowing activity. Never assume that children will remain where you last saw them.
- Keep children out of the operating area and under the watchful care of a responsible adult other than the operator.
- Be alert and shut off the machine if children enter the operating area.

- Before backing up or turning the machine, look down and all around for small children.
- Do not carry children on the machine, even when the blades are not moving. Children could fall off and be seriously injured or prevent you from safely operating the machine. Children who have been given rides in the past could appear in the operating area without warning and be run over or backed over by the machine.

Rollover Protection System (ROPS) Safety

- The ROPS is an integral and effective safety device. Do not remove or alter the ROPS.
- There is no rollover protection when the roll bar is down.
- Keep the roll bar in the fully raised and locked position and always wear your seat belt whenever the roll bar is up.
- Ensure that the seat belt can be released quickly in the event of an emergency.
- Lower the roll bar only when absolutely necessary. Do not wear the seat belt when the roll bar is down.
- Raise the roll bar as soon as clearance permits.
- Wheels dropping over edges, ditches, steep banks, or water can cause rollovers, which may result in serious injury or death.
- Check carefully for overhead clearances before driving under any objects and do not contact them.
- In the event of a rollover, take the machine to an Authorized Service Dealer and have the ROPS inspected.
- Replace damaged ROPS components. Do not repair or alter them.
- Use only accessories and attachments installed on the ROPS that are approved by Toro.

Slope Safety

- Slopes are a major factor related to loss of control and rollover accidents, which can result in severe injury or death. The operator is responsible for safe slope operation. Operating the machine on any slope requires extra caution. Before using the machine on a slope, do the following:
  - Review and understand the slope instructions in the manual and on the machine.
  - Use an angle indicator to determine the approximate slope angle of the area.
  - Never operate on slopes greater than 15°.
  - Evaluate the site conditions of the day to determine if the slope is safe for machine operation. Use common sense and good judgment when performing this evaluation. Changes in the terrain, such as moisture, can quickly affect the operation of the machine on a slope.
- Identify hazards at the base of the slope. Do not operate the machine near drop-offs, ditches, embankments, water, or other hazards. The machine could suddenly roll over if a wheel goes over the edge or the edge collapses. Keep a safe distance (twice the width of the machine) between the machine and any hazard. Use a walk-behind machine or a hand trimmer to mow the grass in these areas.
- Avoid starting, stopping, or turning the machine on slopes. Avoid making sudden changes in speed or direction; turn slowly and gradually.
- Do not operate a machine under any conditions where traction, steering, or stability is in question. Be aware that operating the machine on wet grass, across slopes, or downhill may cause the machine to lose traction. Loss of traction to the drive wheels may result in sliding and a loss of braking and steering. The machine can slide even if the drive wheels are stopped.
- Remove or mark obstacles such as ditches, holes, ruts, bumps, rocks, or other hidden hazards. Tall grass can hide obstacles. Uneven terrain could overturn the machine.
- Use extra care while operating with accessories or attachments, such as grass-collection systems. These can change the stability of the machine and cause a loss of control. Follow directions for counterweights.
- If possible, keep the deck lowered to the ground while operating on slopes. Raising the deck while operating on slopes can cause the machine to become unstable.

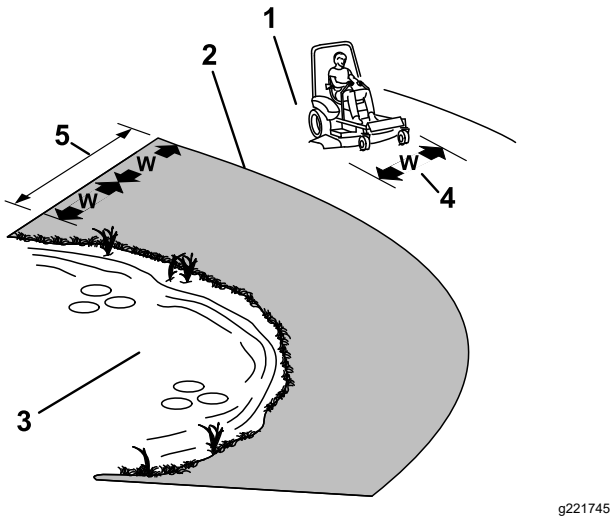

Figure 18

1. Safe Zone—use the machine here on slopes less than 15° or flat areas.
2. Danger Zone—use a walk-behind mower and/or a hand trimmer on slopes greater than 15° and near drop-offs or water.
3. Water
4. W = Width of the machine
5. Keep a safe distance (twice the width of the machine) between the machine and any hazard.

Towing Safety

- Do not attach towed equipment except at the hitch point.
- Do not use the machine as a towing vehicle unless it has a hitch installed.
- Do not exceed the gross towing weight.
- Never allow children or others near the towed equipment.
- On slopes, the weight of the towed equipment may cause loss of traction, increased risk of rollover, and loss of control. Reduce the towed weight and slow down.
- The stopping distance may increase with the weight of a towed load. Travel slowly and allow extra distance to stop.
- Make wide turns to keep the attachment clear of the machine.

Entering the Operator's Position

Use the mower deck as a step to get into the operator's position (Figure 19).

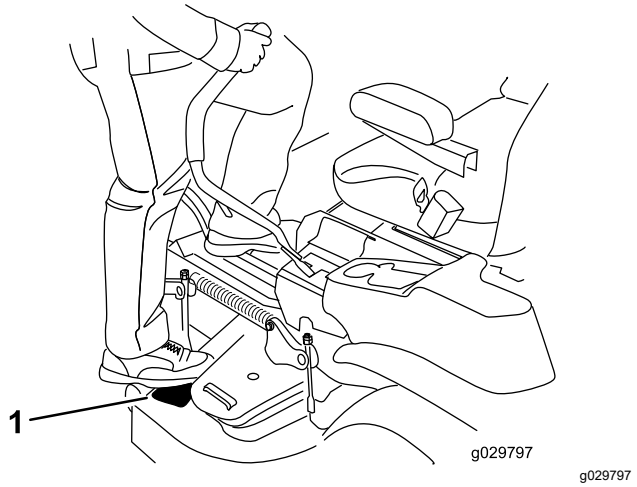

Figure 19

1. Step here.

Operating the Parking Brake

Always engage the parking brake when you stop the machine or leave it unattended.

Engaging the Parking Brake

Park the machine on a level surface.

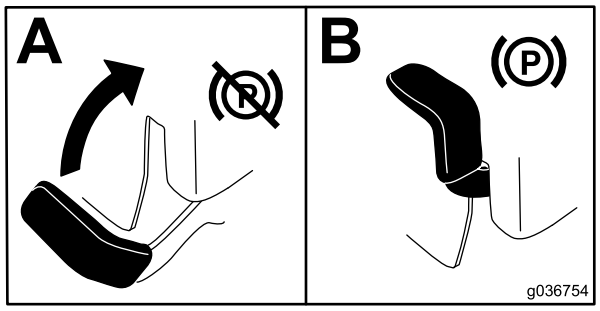

g036754

Figure 20

Disengaging the Parking Brake

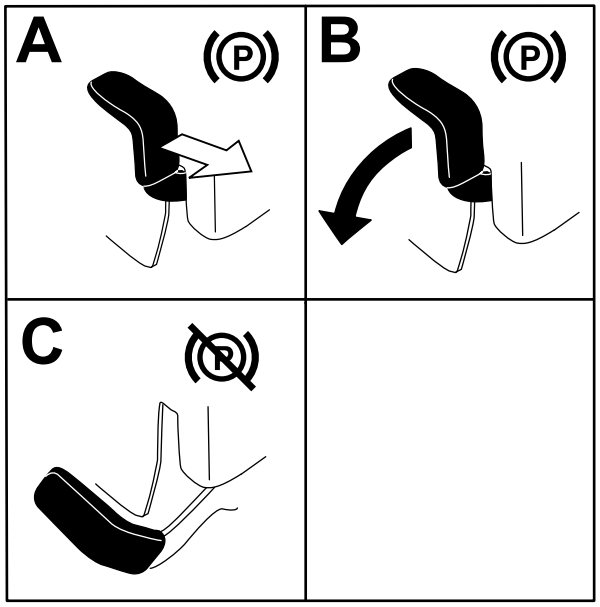

g192635

Figure 21

Operating the Mower Blade-Control Switch (PTO)

The blade-control switch (PTO) starts and stops the mower blades and any powered attachments.

Engaging the Blade-Control Switch (PTO)

Note: Engaging the blade-control switch (PTO) with the throttle position at half or less causes excessive wear to the drive belts.

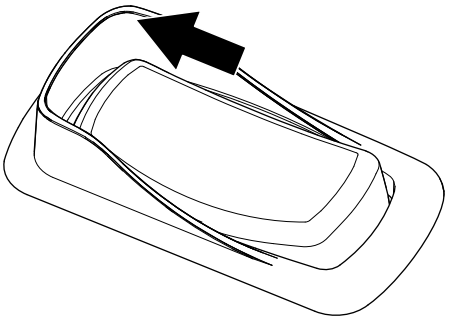

g332523

Figure 22

Disengaging the Blade-Control Switch (PTO)

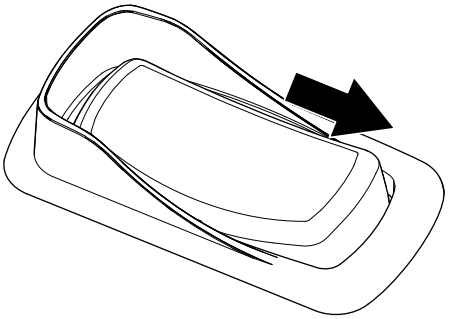

g332522

Figure 23

Operating the Throttle

You can move the throttle control between FAST and SLOW positions (Figure 24).

Always use the FAST position when engaging the PTO.

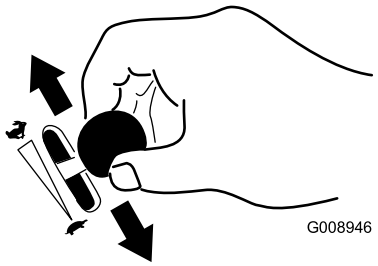

g008946

Figure 24

Operating the Choke

Use the choke to start a cold engine.

1. Pull up the choke knob to engage the choke before using the key switch (Figure 25).
2. Push down the choke knob to disengage the choke after the engine has started (Figure 25).

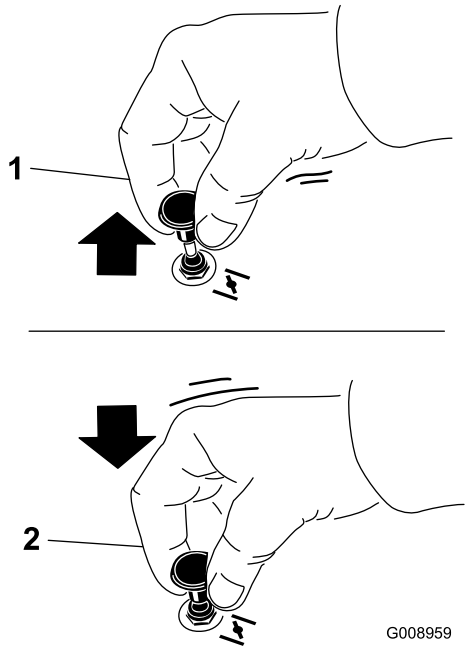

g008959

Figure 25

1. ON position
2. OFF position

Starting the Engine

Note: A warm or hot engine may not require choking.

Important: **Do not engage the starter for more than 5 seconds at a time. Engaging the starter motor for more than 5 seconds can damage the starter motor. If the engine fails to start, wait 10 seconds before operating the engine starter again.**

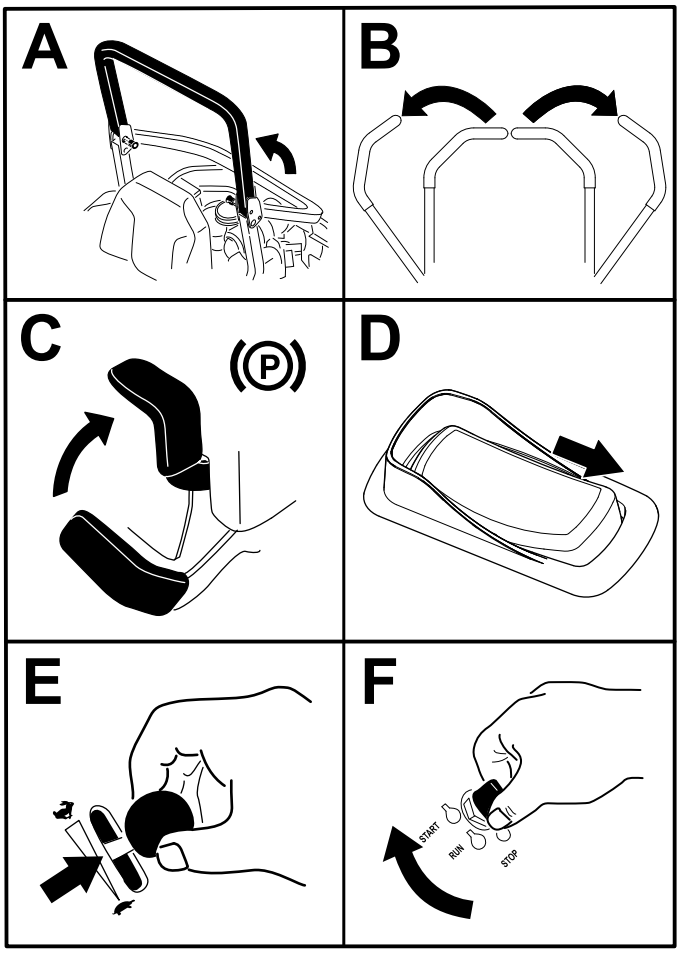

g412516

Figure 26

Shutting Off the Engine

Note: Refer to Figure 45 to determine which engine you have.

⚠ CAUTION

Children or bystanders may be injured if they move or attempt to operate the machine while it is unattended.

Always remove the key and engage the parking brake when leaving the machine unattended.

Shutting Off a Kawasaki or Briggs and Stratton Engine

Let the engine idle at slow throttle for 60 seconds before turning the switch off.

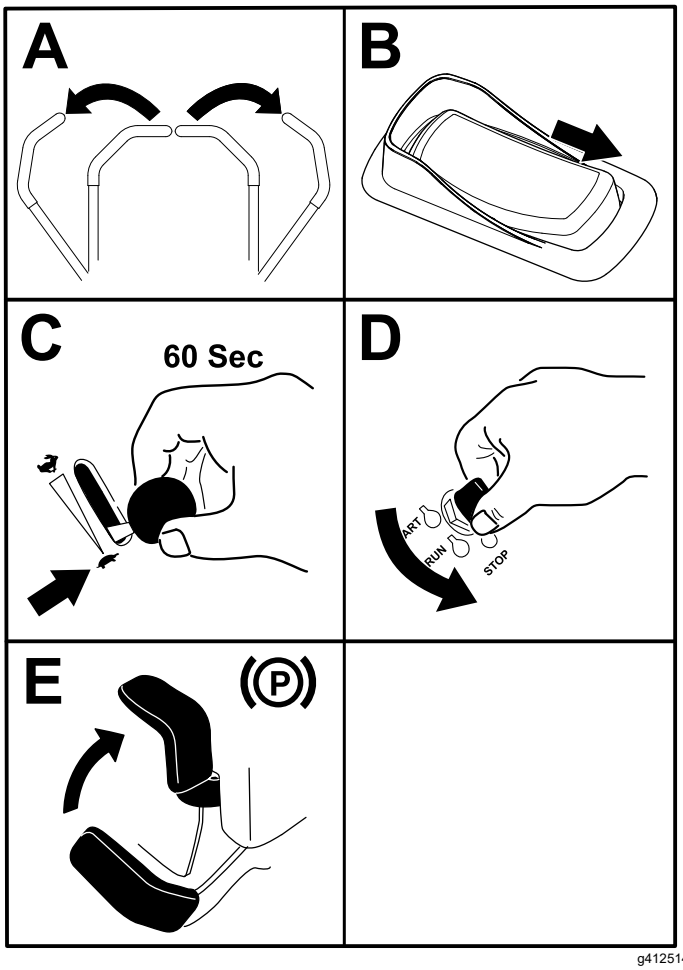

g412514

Figure 27

Important: **Make sure that the fuel-shutoff valve is closed before transporting or storing the machine to prevent fuel leakage. Engage the parking brake before transporting. Remove the key as the fuel pump may run and cause the battery to lose charge.**

Shutting Off Toro Engines

Note: Ensure the throttle is in the FAST position before shutting off the engine.

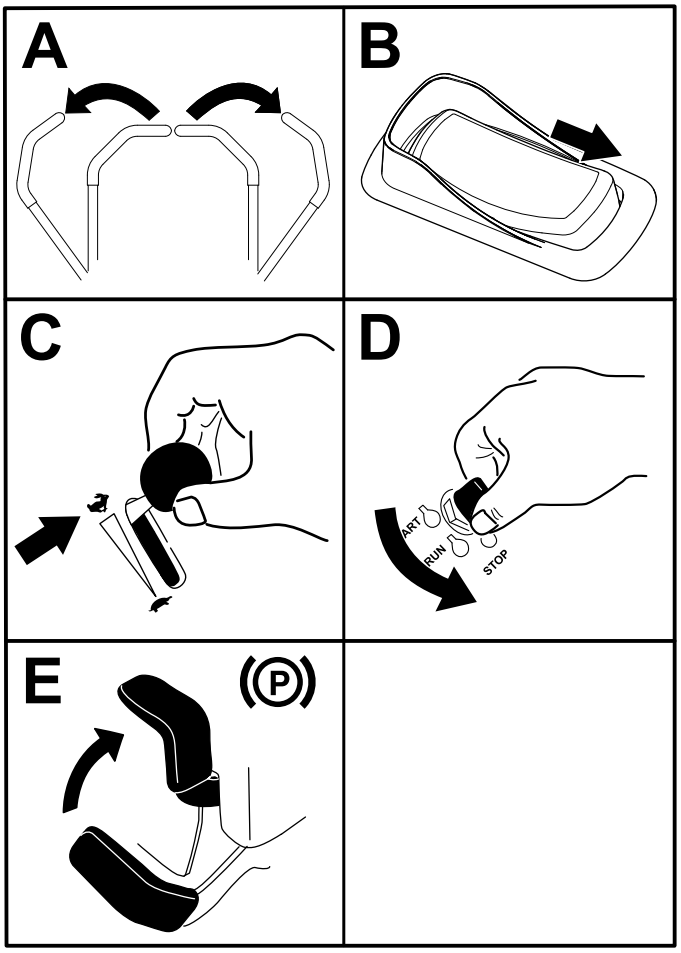

g412515

Figure 28

Important: **Make sure that the fuel-shutoff valve is closed before transporting or storing the machine to prevent fuel leakage. Engage the parking brake before transporting. Remove the key as the fuel pump may run and cause the battery to lose charge.**

Using the Motion-Control Levers

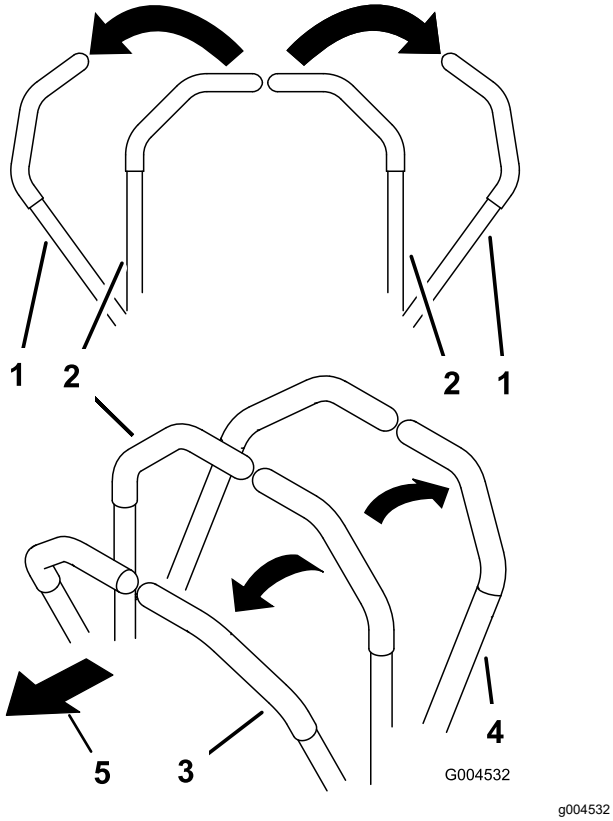

Figure 29

1. Motion-control levers—NEUTRAL-LOCK position
2. Center, unlocked position
3. Forward
4. Reverse
5. Front of the machine

Driving the Machine

The drive wheels turn independently, powered by hydraulic motors on each axle. You can turn 1 side in reverse while you turn the other forward, causing the machine to spin rather than turn. This greatly improves the machine maneuverability but may require some time for you to adapt to how it moves.

The throttle control regulates the engine speed as measured in rpm (revolutions per minute). Place the throttle control in the FAST position for best performance. Always operate in the full throttle position when mowing.

⚠ WARNING

The machine can spin very rapidly. You may lose control of the machine and cause personal injury or damage to the machine.

- **Use caution when making turns.**
- **Slow the machine down before making sharp turns.**

Driving Forward

Note: The engine shuts off when you move the traction-control with the parking brake engaged.

To stop the machine, pull the motion-control levers to the NEUTRAL position.

1. Disengage the parking brake.
2. Move the motion-control levers to the center, unlocked position.
3. To go forward, slowly push the motion-control levers forward (Figure 30).

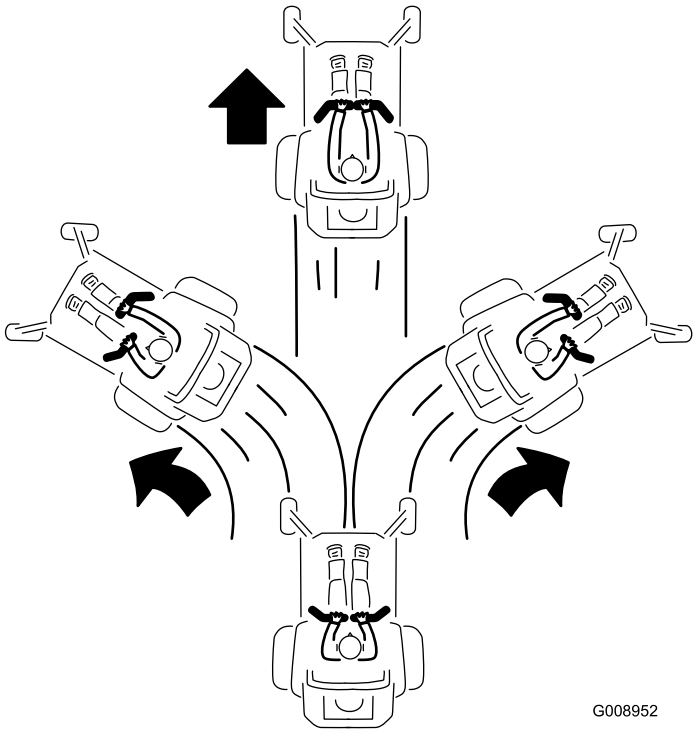

Figure 30

Driving in Reverse

1. Move the motion-control levers to the center, unlocked position.
2. To go in reverse, slowly pull the motion-control levers rearward (Figure 31).

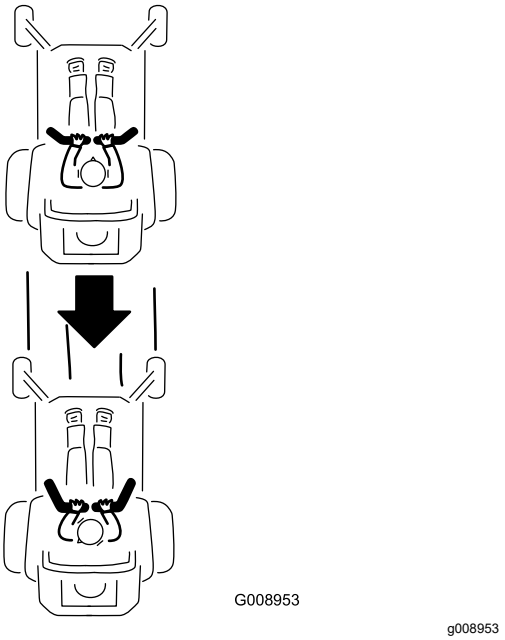

Figure 31

Using the Side Discharge

The mower has a hinged grass deflector that disperses clippings to the side and down toward the turf.

⚠ DANGER

Without a grass deflector, discharge cover, or a complete grass-catcher assembly mounted in place, you and others are exposed to blade contact and thrown debris. Contact with rotating mower blade(s) and thrown debris will cause injury or death.

- **Never remove the grass deflector from the mower deck because the grass deflector routes material down toward the turf. If the grass deflector is ever damaged, replace it immediately.**
- **Never put your hands or feet under the mower deck.**
- **Never try to clear the discharge area or mower blades unless you move the blade-control switch (PTO) to the OFF position, rotate the key switch to the OFF position, and remove the key from the key switch.**
- **Make sure that the grass deflector is in the down position.**

Adjusting the Height of Cut

For Machines with a Deck-Lift Pedal

Using the Transport Lock

1. Push the deck-lift pedal fully forward to lock the mower deck in the TRANSPORT position (Figure 32).
2. Push the deck-lift pedal forward and push the transport lock forward to the UNLOCK position, then slowly lower the mower deck. (Figure 32).

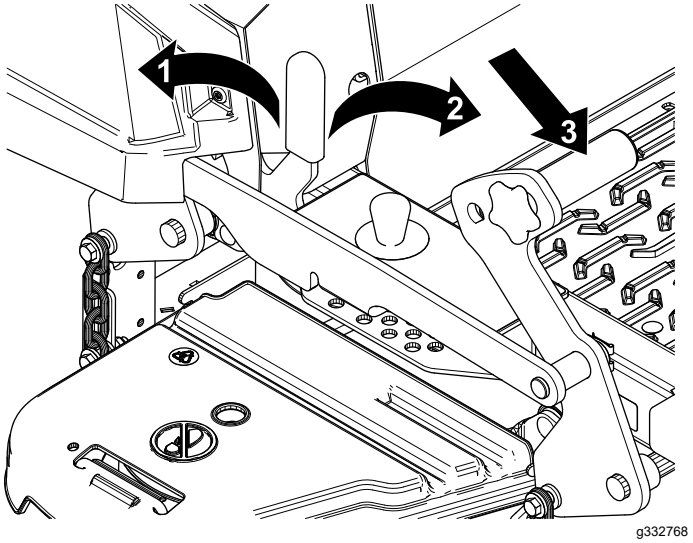

Figure 32

1. LOCK position—the mower deck locks into the transport position.
2. UNLOCK position—the mower deck does not lock into the transport position.
3. Push on the deck-lift pedal using your foot to raise the mower deck.

Adjusting the Height-of-Cut Pin

You can adjust the height of cut from 38 to 127 mm (1-1/2 to 5 inches) in 6 mm (1/4 inch) increments by relocating the clevis pin into different hole locations.

1. Push the deck-lift pedal fully forward to lock the mower deck in the TRANSPORT position (also the 127 mm/5 inches cutting height position) as shown in Figure 33.
2. To adjust, remove the pin from the height-of-cut bracket (Figure 33).
3. Select a hole in the height-of-cut bracket corresponding to the height of cut desired, and insert the pin (Figure 33).
4. Push the deck-lift pedal forward, push the transport lock forward, and slowly lower the mower deck.

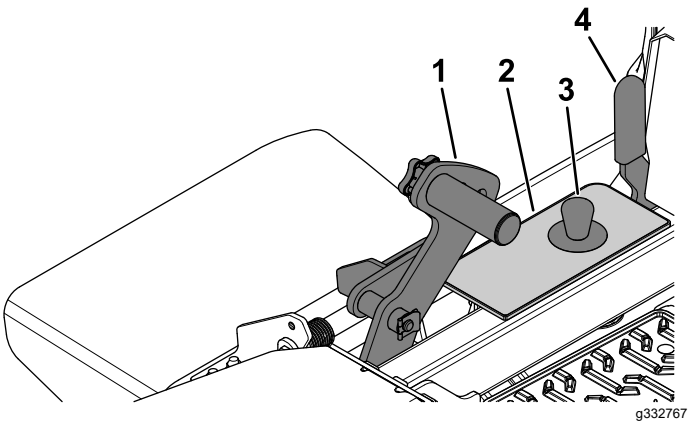

Figure 33

1. Deck-lift pedal
2. Height-of-cut bracket
3. Height-of-cut pin
4. Transport-lock lever

Adjusting the Anti-Scalp Rollers

Whenever you change the height-of-cut, adjust the height of the anti-scalp rollers.

1. Park the machine on a level surface, disengage the blade-control switch, and engage the parking brake.
2. Shut off the engine, remove the key, and wait for all moving parts to stop before leaving the operating position.
3. Adjust the anti-scalp rollers as shown in Figure 34, Figure 35, and Figure 36.

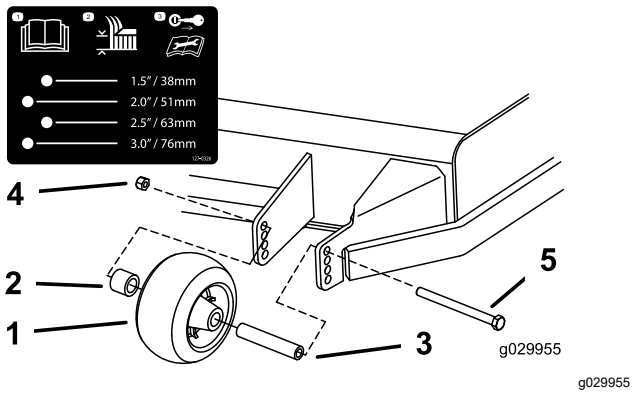

g029955

Figure 34

1. Anti-scalp roller
2. Spacer
3. Bushing
4. Flange nut
5. Bolt

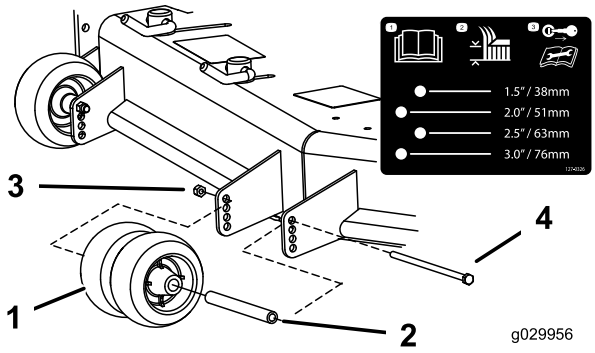

g029956

Figure 35

1. Anti-scalp roller
2. Bushing
3. Flange nut
4. Bolt

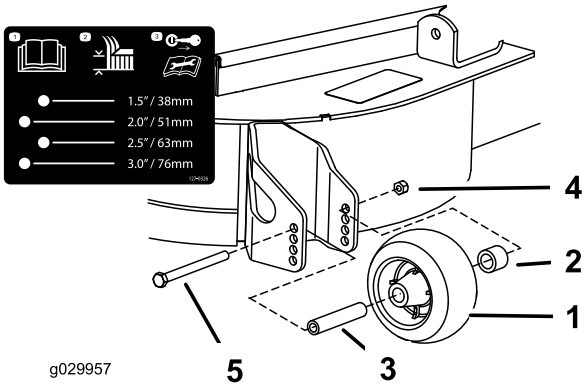

g029957

Figure 36

1. Anti-scalp roller
2. Spacer
3. Bushing
4. Flange nut
5. Bolt

Operating Tips

Using the Fast Throttle Setting

For best mowing and maximum air circulation, operate the engine at the FAST position. Air is required to thoroughly cut grass clippings, so do not set the height-of-cut so low as to totally surround the mower deck in uncut grass. Always try to have 1 side of the mower deck free from uncut grass, which allows air to be drawn into the mower deck.

Cutting a Lawn for the First Time

Cut grass slightly longer than normal to ensure that the cutting height of the mower deck does not scalp any uneven ground. However, the cutting height used in the past is generally the best one to use. When cutting grass longer than 15 cm (6 inches) tall, you may want to cut the lawn twice to ensure an acceptable quality of cut.

Cutting a Third of the Grass Blade

It is best to cut only about a third of the grass blade. Cutting more than that is not recommended unless grass is sparse, or it is late fall when grass grows more slowly.

Alternating the Mowing Direction

Alternate the mowing direction to keep the grass standing straight. This also helps disperse clippings, which enhances decomposition and fertilization.

Mowing at Correct Intervals

Grass grows at different rates at different times of the year. To maintain the same cutting height, mow more often in early spring. As the grass growth rate slows in mid summer, mow less frequently. If you cannot mow for an extended period, first mow at a high cutting height, then mow again 2 days later at a lower height setting.

Using a Slower Cutting Speed

To improve cut quality, use a slower ground speed in certain conditions.

Avoiding Cutting Too Low

When mowing uneven turf, raise the cutting height to avoid scalping the turf.

Stopping the Machine

If you must stop the forward motion of the machine while mowing, a clump of grass clippings may drop onto your lawn. To avoid this, move onto a previously cut area with the blades engaged or you can disengage the mower deck while moving forward.

Keeping the Underside of the Mower Deck Clean

Clean clippings and dirt from the underside of the mower deck after each use. If grass and dirt build up inside the mower deck, cutting quality will eventually become unsatisfactory.

Maintaining the Blade(s)

Maintain a sharp blade throughout the cutting season because a sharp blade cuts cleanly without tearing or shredding the grass blades. Tearing and shredding turns grass brown at the edges, which slows growth and increases the chance of disease. Check the mower blades after each use for sharpness, and for any wear or damage. File down any nicks and sharpen the blades as necessary. If a blade is damaged or worn, replace it immediately with a genuine Toro replacement blade.

After Operation

After Operation Safety

General Safety

- Engage the parking brake, shut off the engine, remove the key, and wait for all moving parts to stop before leaving the operator's position. Allow the machine to cool before servicing, adjusting, fueling, cleaning, or storing it.
- Clean grass and debris from the cutting unit, muffler, drives, grass catcher, and engine compartment to help prevent fires. Clean up oil or fuel spills.
- Shut off the fuel and remove the key before storing or transporting the machine.

Using the Fuel-Shutoff Valve

Close the fuel-shutoff valve for transport, maintenance, and storage (Figure 37).

Ensure that the fuel-shutoff valve is open when starting the engine.

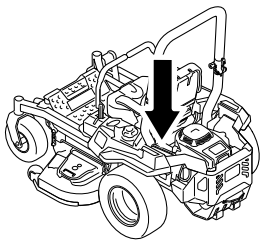

g036849

g036849

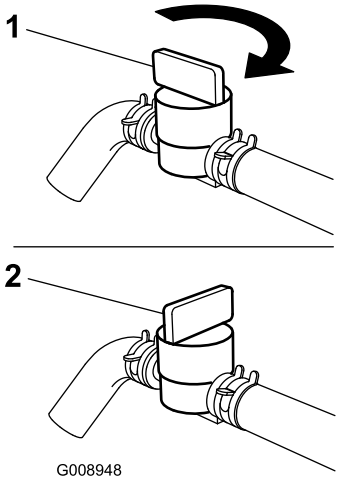

g008948

Figure 37

1. ON position
2. OFF position

Using the Drive-Wheel Release Valves

⚠ WARNING

Hands may become entangled in the rotating drive components below the engine deck, which could result in serious injury.

Shut off the engine, remove the key, and allow all moving parts to stop before accessing the drive-wheel release valves.

⚠ WARNING

The engine and hydraulic-drive units can become very hot. Touching a hot engine or hydraulic-drive units can cause severe burns.

Allow the engine and hydraulic-drive units to cool completely before accessing the drive-wheel release valves.

The drive-wheel release valves are located behind the seat, near the engine compartment.

1. Park the machine on a level surface, disengage the blade-control switch (PTO), and engage the parking brake.
2. Shut off the engine, remove the key, and wait for all moving parts to stop before leaving the operating position.
3. To push the machine, move the bypass levers rearward and out to lock them in place as shown in Figure 38.

   Repeat this on the other side of the machine.

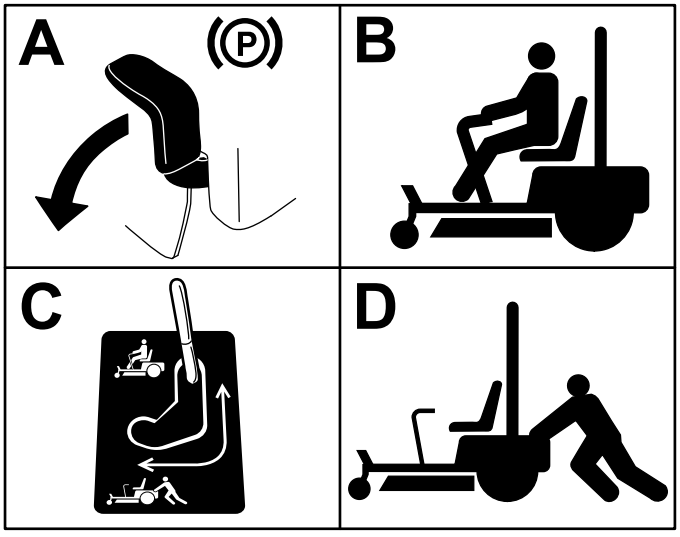

g413065

Figure 38

Towing a Trailer

The machine is capable of pulling trailers and attachments. Contact your authorized Toro distributor for the available tow hitches.

Your machine can tow trailers with a maximum gross trailer weight (GTW) up to 113 kg (250 lb).

Do not exceed 22 kg (49 lb) of tongue weight on the tow hitch of the machine.

When hauling cargo or towing a trailer, do not overload the machine or trailer. Overloading can cause poor performance or damage to the hydraulic-drive units, tires, and frame.

1. Park the machine on a level surface, disengage the blade-control switch (PTO), and engage the parking brake.
2. Shut off the engine, remove the key, and wait for all moving parts to stop before leaving the operating position.
3. Insert the hitch ball mount into the receiver located at the rear of the machine.
4. Insert the hitch pin through the hole in the receiver and the hitch ball mount.
5. Secure the hitch using the hairpin cotter.

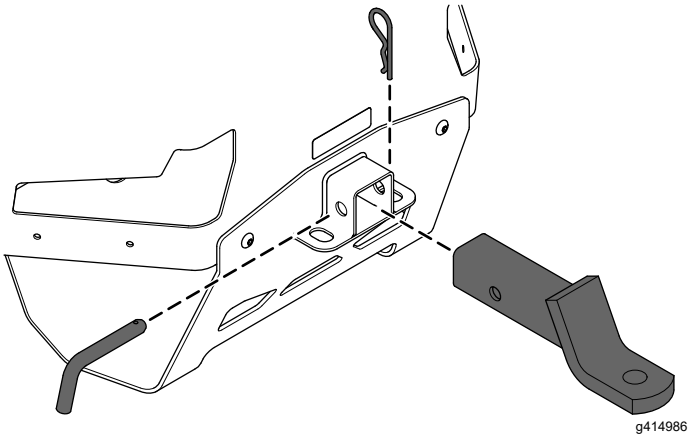

g414986

Figure 39

Transporting the Machine

Use a heavy-duty trailer or truck to transport the machine. Use a full-width ramp. Ensure that the trailer or truck has all the necessary brakes, lighting, and marking as required by law. Please carefully read all the safety instructions. Knowing this information could help you or bystanders avoid injury. Refer to your local ordinances for trailer and tie-down requirements.

⚠ WARNING

Driving on the street or roadway without turn signals, lights, reflective markings, or a slow-moving-vehicle emblem is dangerous and can lead to accidents, causing personal injury.

Do not drive the machine on a public street or roadway.

Selecting a Trailer

⚠ WARNING

Loading a machine onto a trailer or truck increases the possibility of tip-over and could cause serious injury or death (Figure 40).

- **Use only a full-width ramp; do not use individual ramps for each side of the machine.**
- **Do not exceed a 15-degree angle between the ramp and the ground or between the ramp and the trailer or truck.**
- **Ensure that the length of the ramp is at least 4 times as long as the height of the trailer or truck bed to the ground. This ensures that the ramp angle does not exceed 15 degrees on flat ground.**

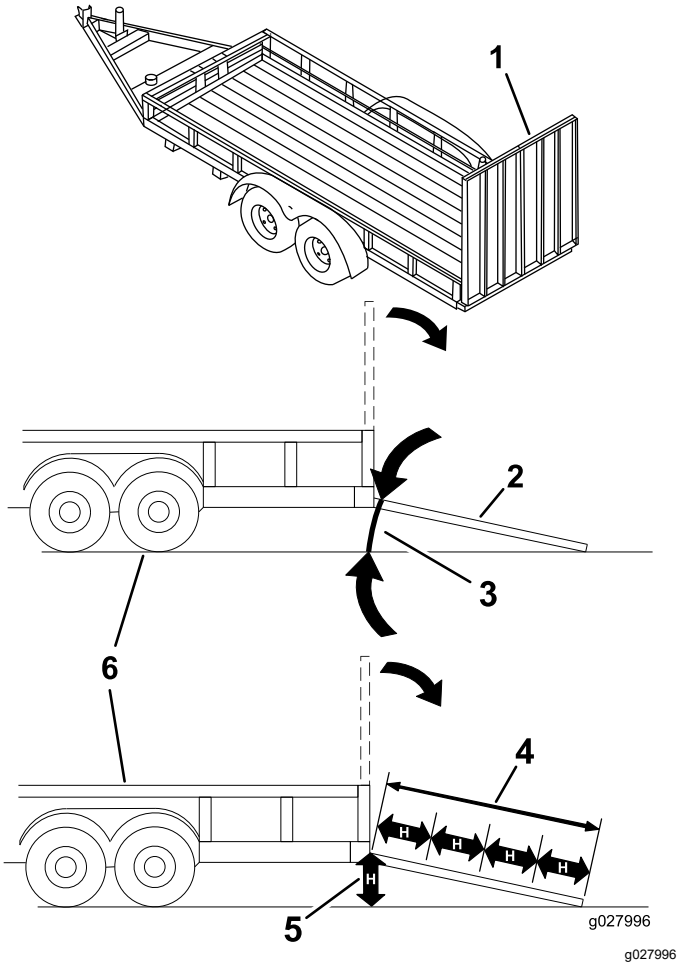

Figure 40

1. Full-width ramp in stowed position
2. Side view of full-width ramp in loading position
3. Not greater than 15 degrees
4. Ramp is at least 4 times as long as the height of the trailer or truck bed to the ground
5. H=height of the trailer or truck bed to the ground
6. Trailer

Loading the Machine

⚠ WARNING

Loading a machine onto a trailer or truck increases the possibility of tip-over and could cause serious injury or death.

- **Use extreme caution when operating a machine on a ramp.**
- **Back the machine up the ramp and drive it forward down the ramp.**
- **Avoid sudden acceleration or deceleration while driving the machine on a ramp as this could cause a loss of control or a tip-over situation.**

1. If using a trailer, connect it to the towing vehicle and connect the safety chains.
2. If applicable, connect the trailer brakes and lights.
3. Lower the ramp, ensuring that the angle between the ramp and the ground does not exceed 15 degrees (Figure 40).
4. Back the machine up the ramp (Figure 41).

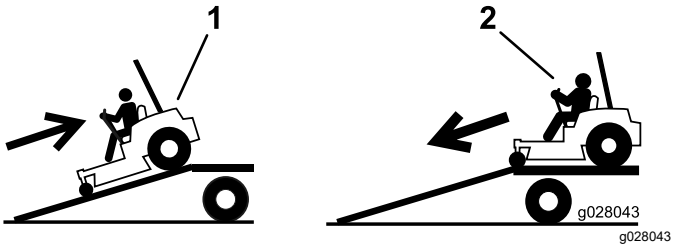

Figure 41

1. Back the machine up the ramp.
2. Drive the machine forward down the ramp.

5. Shut off the engine, remove the key, and engage the parking brake.
6. Tie down the machine near the front caster wheels and the rear frame with straps, chains, cable, or ropes (Figure 42). Refer to local regulations for tie-down requirements.

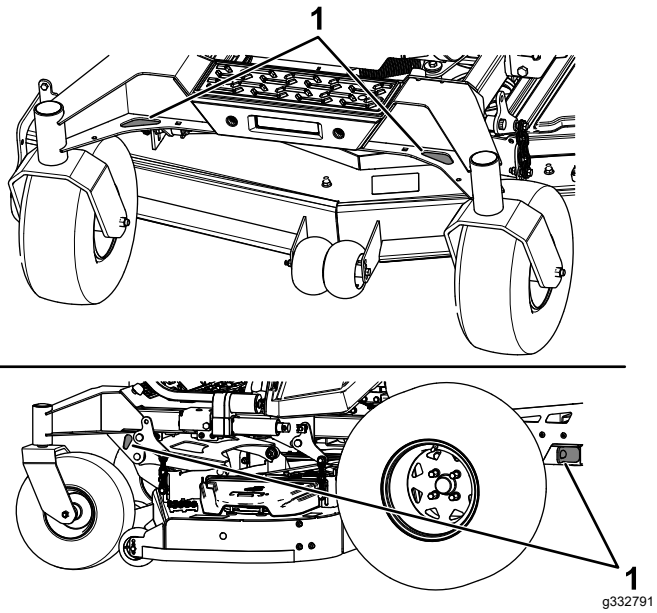

Figure 42

1. Tie-down points

Unloading the Machine

1. Lower the ramp, ensuring that the angle between the ramp and the ground does not exceed 15 degrees (Figure 40).
2. Drive the machine forward down the ramp (Figure 41).

Maintenance

Maintenance Safety

- If you leave the key in the switch, someone could accidently start the engine and seriously injure you or other bystanders. Remove the key from the switch before you perform any maintenance.
- Before you leave the operator's position, do the following:
  - Park the machine on a level surface.
  - Disengage the drives.
  - Engage the parking brake.
  - Shut off the engine and remove the key.
  - Allow machine components to cool before performing maintenance.
- Do not allow untrained personnel to service the machine.
- Keep your hands and feet away from moving parts or hot surfaces. If possible, do not make adjustments with the engine running.
- Carefully release pressure from components with stored energy.
- Check the parking brake operation frequently. Adjust and service it as required.
- Never tamper with safety devices. Check their proper operation regularly.
- Clean grass and debris from the cutting unit, muffler, drives, grass catcher, and engine compartment to prevent fires.
- Clean up oil or fuel spills and remove fuel-soaked debris.
- Do not rely on hydraulic or mechanical jacks to support the machine; support the machine with jack stands whenever you raise the machine.
- Keep all parts in good working condition and all hardware tightened, especially the blade-attachment hardware. Replace all worn or damaged decals.
- Disconnect the cable from the negative terminal of the battery before repairing the machine.
- To ensure optimum performance, use only genuine Toro replacement parts and accessories. Replacement parts and accessories made by other manufacturers could be dangerous, and such use could void the product warranty.

Recommended Maintenance Schedule(s)

Maintenance Service Interval	Maintenance Procedure
After the first 5 hours	• For Toro engines—change the engine oil and filter.
After the first 75 hours	• Change the hydraulic-system filters and fluid.
Before each use or daily	• Check the safety-interlock system. • For Kawasaki engines—check the engine-oil level. • For Toro engines—check the engine-oil level. • For Briggs and Stratton engines—Check the engine-oil level. • Clean the blower housing (more often under dusty, dirty conditions). • Clean the engine screen, engine-oil cooler, and the area around the engine. • Clean around the engine-exhaust system. • Check the seat belt. • Check the hydraulic-fluid level. • Inspect the blades. • Clean the suspension system.
After each use	• Clean the mower deck.
Every 50 hours	• Check the spark arrester (if equipped). • Check the tire pressure. For machines with pneumatic tires only. • Inspect the belts for cracks and wear.
Every 100 hours	• Lubricate the mower deck-lift pivots. • For Kawasaki engines—change the engine oil (more often in dirty or dusty conditions). • For Kawasaki engines—replace or clean and gap the spark plug.

Maintenance Service Interval	Maintenance Procedure
Every 100 hours or yearly, whichever comes first	• For Toro engines—change the engine oil and oil filter (more often in dirty or dusty conditions). • For Toro engines—check the spark plug(s). • For Briggs and Stratton engines—Change the engine oil and filter. • For Briggs and Stratton engines—Replace the spark plug.
Every 200 hours	• For Kawasaki engines—change the engine-oil filter (more often in dirty or dusty conditions). • For Toro engines—replace the spark plug(s).
Every 250 hours	• For Kawasaki engines—replace the primary air filter (more often in dirty or dusty conditions). • For Kawasaki engines—check the safety air filter (more often in dirty or dusty conditions). • For Toro engines—replace the air filter (more often in dirty or dusty conditions). • For Briggs and Stratton engines—Check and adjust the valve clearance. Contact an Authorized Service Dealer. • For Briggs and Stratton engines—Check the air cleaner (more often in dirty or dusty conditions).
Every 300 hours	• For Kawasaki engines—Check and adjust the valve clearance. See an Authorized Service Dealer. • For Toro engines—Check and adjust the valve clearance. See an Authorized Service Dealer.
Every 400 hours	• Grease the caster pivots (more often in dirty or dusty conditions). • For Briggs and Stratton engines—Replace the primary air filter. • Check and clean the engine cooling fins and shrouds (more often in dirty or dusty conditions). • After the initial change—change the hydraulic-system filters and fluid when using Toro® HYPR-OIL™ 500 fluid. (Change it more often under dirty or dusty conditions)
Every 500 hours	• For Kawasaki engines—replace the safety air filter (more often in dirty or dusty conditions). • Replace the emissions-air intake filter. • Replace the fuel filter (more often in dusty, dirty conditions). • Check the parking brake adjustment.
Every 600 hours	• For Briggs and Stratton engines—Replace the inner air filter.
Monthly	• Check the battery charge.
Yearly	• Repack the caster-wheel bearings (more often in dirty or dusty conditions). • Greasing the caster-wheel hubs.
Yearly or before storage	• Paint chipped surfaces. • Complete all the procedures in the Storage chapter.

Important: **Refer to your engine owner's manual for additional maintenance procedures.**

⚠ CAUTION

If you leave the key in the switch, someone could accidently start the engine and seriously injure you or other bystanders.

Shut off the engine and remove the key from the switch before you perform any maintenance.

Lubrication

Greasing the Machine

Grease the machine more often in dirty or dusty conditions.

Grease Type: No. 2 lithium or molybdenum grease

1. Park the machine on a level surface, disengage the blade-control switch, and engage the parking brake.
2. Shut off the engine, remove the key, and wait for all moving parts to stop before leaving the operating position.
3. Clean the grease fittings with a rag.

   Note: Scrape any paint off the front of the fitting(s).
4. Connect a grease gun to the fitting.
5. Pump grease into the fittings until grease begins to ooze out of the bearings.
6. Wipe up any excess grease.

Lubricating the Mower Deck-Lift Pivots

Service Interval: Every 100 hours

Use light oil or spray lubricant to lubricate the deck-lift pivots.

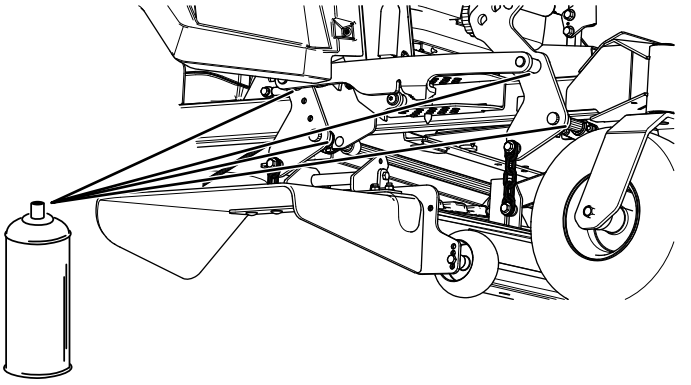

g336930

Figure 43

Greasing the Caster Pivots

Service Interval: Every 400 hours/Yearly (whichever comes first) (more often in dirty or dusty conditions).

Yearly—Repack the caster-wheel bearings (more often in dirty or dusty conditions).

1. Park the machine on a level surface, disengage the blade-control switch, and engage the parking brake.
2. Shut off the engine, remove the key, and wait for all moving parts to stop before leaving the operating position.
3. Remove the dust cap and adjust the caster pivots and keep the dust cap off until greasing is done; refer to Greasing the Machine (page 38).
4. Remove the hex plug.
5. Thread a grease fitting into the hole.
6. Pump grease into the fitting until it oozes out around the top bearing.
7. Remove the grease fitting from the hole. Install the hex plug and cap.

Greasing the Caster-Wheel Hubs

Service Interval: Yearly

1. Park the machine on a level surface, disengage the blade-control switch, and engage the parking brake.
2. Shut off the engine, remove the key, and wait for all moving parts to stop before leaving the operating position.
3. Raise the mower for access.
4. Remove the caster wheel from the caster forks.
5. Remove the seal guards from the wheel hub.

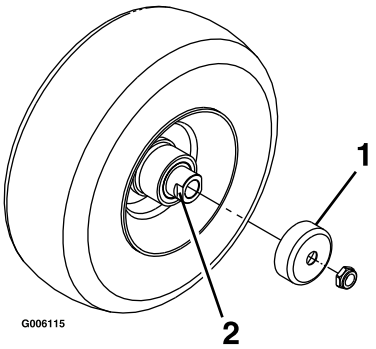

g006115

Figure 44

1. Seal guard
2. Spacer nut with wrench flats

6. Remove a spacer nut from the axle assembly in the caster wheel.

   Note: Thread-locking compound has been applied to lock the spacer nuts to the axle.

7. Remove the axle (with the other spacer nut still assembled to it) from the wheel assembly.
8. Pry out seals and inspect bearings for wear or damage and replace if necessary.
9. Pack the bearings with a general-purpose grease.
10. Insert 1 bearing and 1 new seal into the wheel.
11. If the axle assembly is missing both spacer nuts, apply a thread-locking compound to 1 spacer nut and thread it onto the axle with the wrench flats facing outward.

    Note: Do not thread the spacer nut all of the way onto the end of the axle. Leave approximately 3 mm (1/8 inch) from the outer surface of the spacer nut to the end of the axle inside the nut.

12. Insert the assembled nut and axle into the wheel on the side with the new seal and bearing.
13. With the open end of the wheel facing up, fill the area inside the wheel around the axle full of general-purpose grease.
14. Insert the second bearing and new seal into the wheel.
15. Apply a thread-locking compound to the second spacer nut, and thread it onto the axle with the wrench flats facing outward.
16. Torque the nut to 8 to 9 N·m (75 to 80 in-lb), loosen the nut, then torque it to 2 to 3 N·m (20 to 25 in-lb).

    Note: Make sure that the axle does not extend beyond either nut.

17. Install the seal guards over the wheel hub, and insert the wheel into the caster fork.
18. Install the caster bolt and tighten the nut fully.

Important: **To prevent seal and bearing damage, check the bearing adjustment often. Spin the caster tire. The tire should not spin freely (more than 1 or 2 revolutions) or have any side play. If the wheel spins freely, adjust the torque on the spacer nut until there is a slight amount of drag. Apply another layer of thread-locking compound.**

Engine Maintenance

Engine Safety

- Keep your hands, feet, face, other body parts, and clothing away from the muffler and other hot surfaces. Allow engine components to cool before performing maintenance.
- Do not change the engine governor speed or overspeed the engine.

Identifying the Engine

Use the following graphic to identify the engine you have and proceed to the section listed below for service (Figure 45).

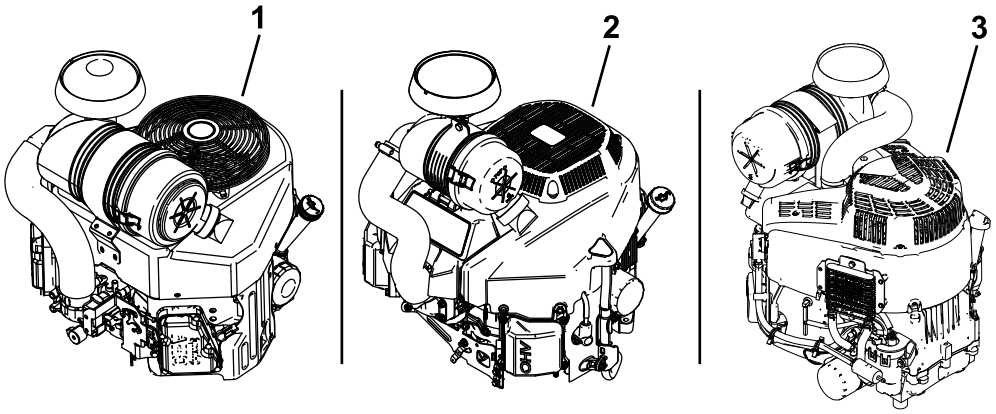

g413922

Figure 45

1. Kawasaki engine
2. Toro engine
3. Briggs and Stratton engine

- For Kawasaki engine maintenance, refer to Servicing a Kawasaki® Engine (page 41).
- For Toro engine maintenance, refer to Servicing a Toro Engine (page 46).
- For Briggs and Stratton engine maintenance, refer to Servicing a Briggs and Stratton® Engine (page 50).

Servicing a Kawasaki® Engine

This section is only for machines with Kawasaki engines. If your engine looks like the one shown in Figure 46, you have a Kawasaki engine.

Important: **Refer to your engine owner's manual for additional maintenance procedures.**

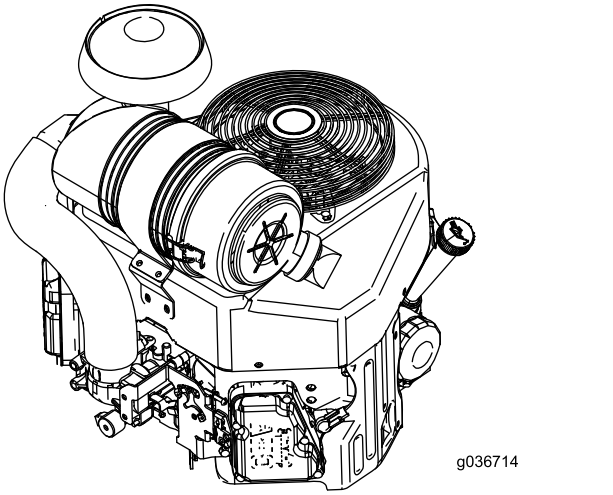

g036714

Figure 46

Servicing the Air Cleaner

Service Interval: Every 250 hours—For Kawasaki engines—replace the primary air filter (more often in dirty or dusty conditions).

Every 250 hours—For Kawasaki engines—check the safety air filter (more often in dirty or dusty conditions).

Every 500 hours—For Kawasaki engines—replace the safety air filter (more often in dirty or dusty conditions).

Note: Service the air cleaner more frequently if operating conditions are extremely dirty or dusty.

Removing the Filters

1. Park the machine on a level surface, disengage the blade-control switch (PTO), and engage the parking brake.
2. Shut off the engine, remove the key, and wait for all moving parts to stop before leaving the operating position.
3. Release the latches on the air cleaner and pull the air-cleaner cover off the air-cleaner body (Figure 47).

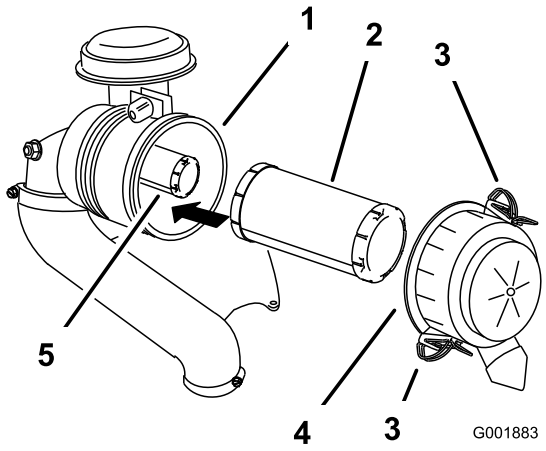

g001883

Figure 47

1. Air-cleaner body
2. Primary filter
3. Latch
4. Air-cleaner cover
5. Safety filter

4. Clean the inside of the air-cleaner cover with compressed air.
5. Gently slide the primary filter out of the air-cleaner body (Figure 47).

   Note: Avoid knocking the filter into the side of the body.
6. Remove the safety filter only to replace it.

Inspecting the Filters

1. Inspect the safety filter. If it is dirty, replace both the safety and primary filters.

   Important: **Do not attempt to clean the safety filter. If the safety filter is dirty, then the primary filter is damaged.**
2. Inspect the primary filter for damage by looking into the filter while shining a bright light on the outside of the filter. If the primary filter is dirty, bent, or damaged, replace it.

   Note: Holes in the filter appear as bright spots. Do not clean the primary filter.

Installing the Filters

Important: **To prevent engine damage, always operate the engine with both air filters and the cover installed.**

1. If you are installing new filters, check each filter for shipping damage.

   Note: Do not use a damaged filter.
2. If you are replacing the inner filter, carefully slide it into the filter body (Figure 47).

3. Carefully slide the primary filter over the safety filter (Figure 47).

   Note: Ensure that the primary filter is fully seated by pushing on the outer rim while installing it.

   Important: **Do not press on the soft, inside area of the filter.**

4. Install the air-cleaner cover and secure the latches (Figure 47).

Servicing the Engine Oil

Service Interval: Before each use or daily

Every 100 hours (more often in dirty or dusty conditions).

Every 200 hours—For Kawasaki engines—change the engine-oil filter (more often in dirty or dusty conditions).

Engine-Oil Specifications

Oil Type: Detergent oil (API service SF, SG, SH, SJ, or SL)

Crankcase Capacity: 1.8 L (61 fl oz) without the oil filter; 2.1 L (71 fl oz) with the oil filter

Viscosity: See the table below.

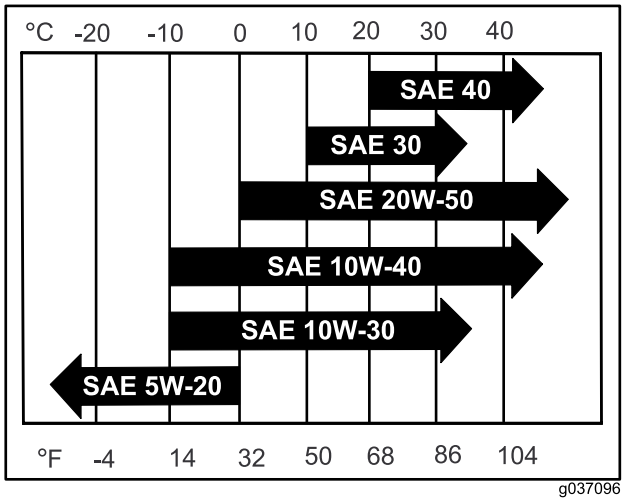

g037096

Figure 48

Note: Although 10W-40 engine oil is recommended for most conditions, you may need to change oil viscosity to accommodate atmospheric conditions. Using 20W-50 engine oil in higher ambient temperatures can reduce oil consumption.

Checking the Engine-Oil Level

Note: Check the oil when the engine is cold.

Important: **If you overfill or underfill the engine crankcase with oil and run the engine, you may damage the engine.**

1. Park the machine on a level surface, disengage the blade-control switch (PTO), and engage the parking brake.
2. Shut off the engine, remove the key, and wait for all moving parts to stop before leaving the operating position.

   Note: Ensure that the engine is cool so that the oil has had time to drain into the sump.

3. To keep dirt, grass clippings, etc., out of the engine, clean the area around the oil-fill cap and dipstick before removing it (Figure 49).

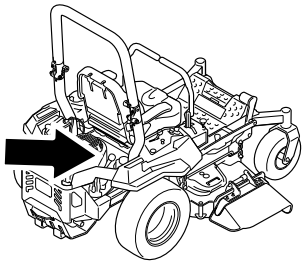

g036856

g036856

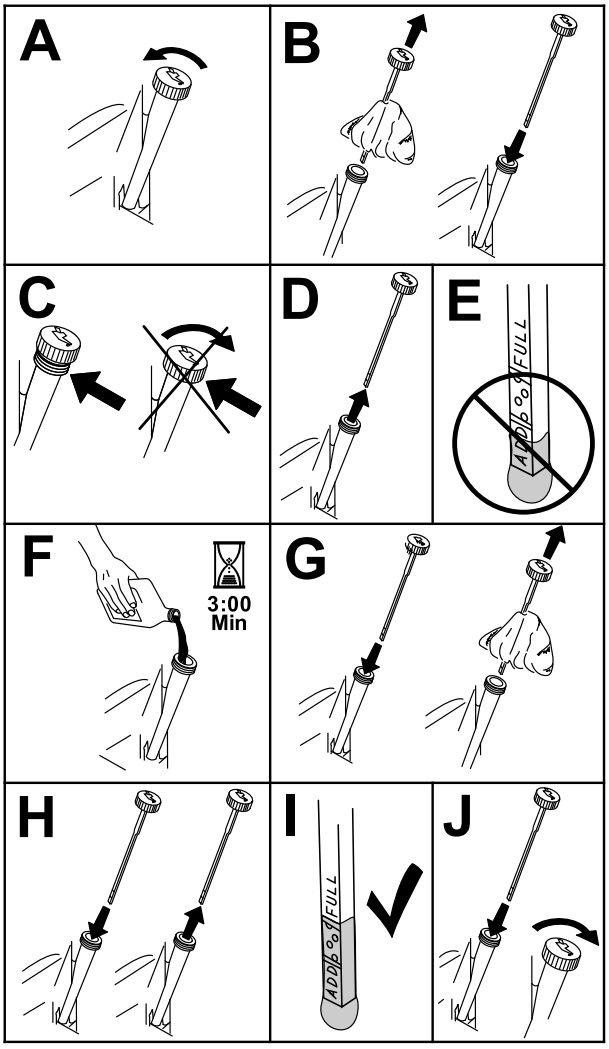

g307458

Figure 49

3. Disengage the blade-control switch (PTO) and engage the parking brake.
4. Shut off the engine, remove the key, and wait for all moving parts to stop before leaving the operating position.
5. Drain the oil from the engine (Figure 50).

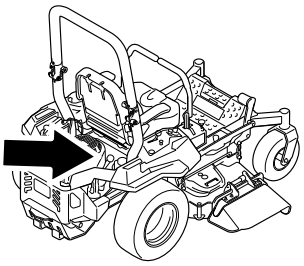

g036856

g036856

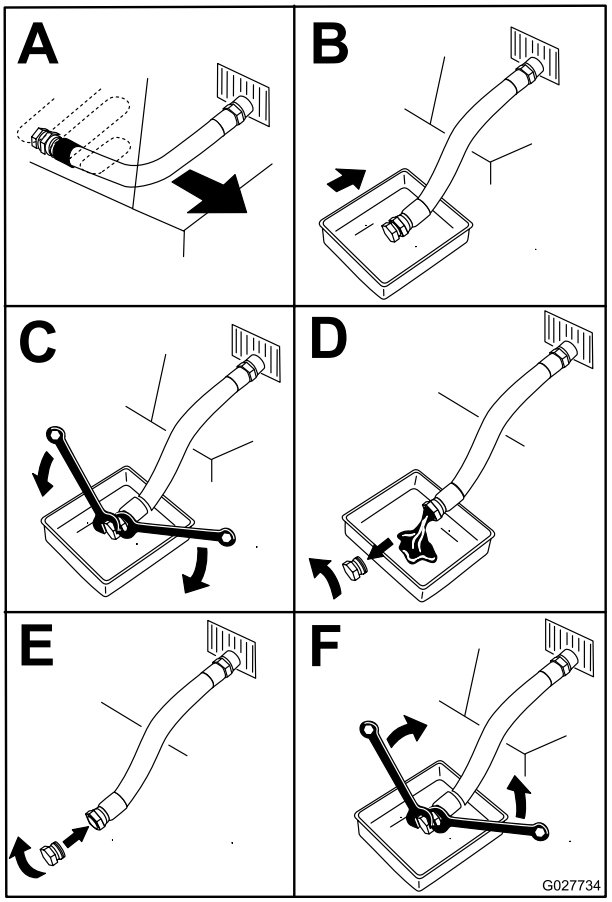

g027734

Figure 50

Changing the Engine Oil

Note: Dispose of the used oil at a recycling center.

1. Start the engine and let it run for 5 minutes.

   Note: This warms the oil so that it drains better.
2. Park the machine so that the drain side is slightly lower than the opposite side to ensure that the oil drains completely.

6. Slowly pour approximately 80% of the specified oil into the filler tube and slowly add the additional oil to bring it to the Full mark (Figure 51).

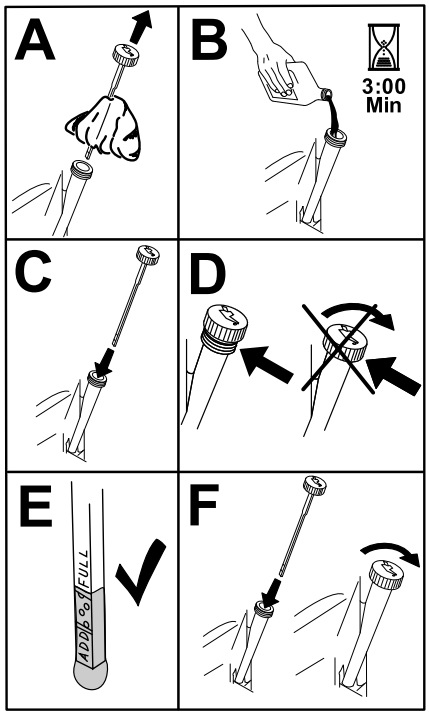

g194610

Figure 51

7. Start the engine and drive to a flat area.
8. Check the oil level again.

Changing the Engine-Oil Filter

1. Drain the oil from the engine; refer to Changing the Engine Oil (page 43).
2. Change the engine-oil filter (Figure 52).

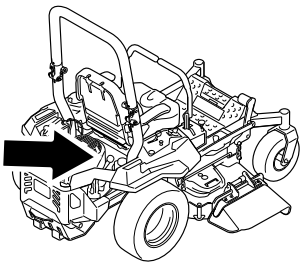

g036856

g036856

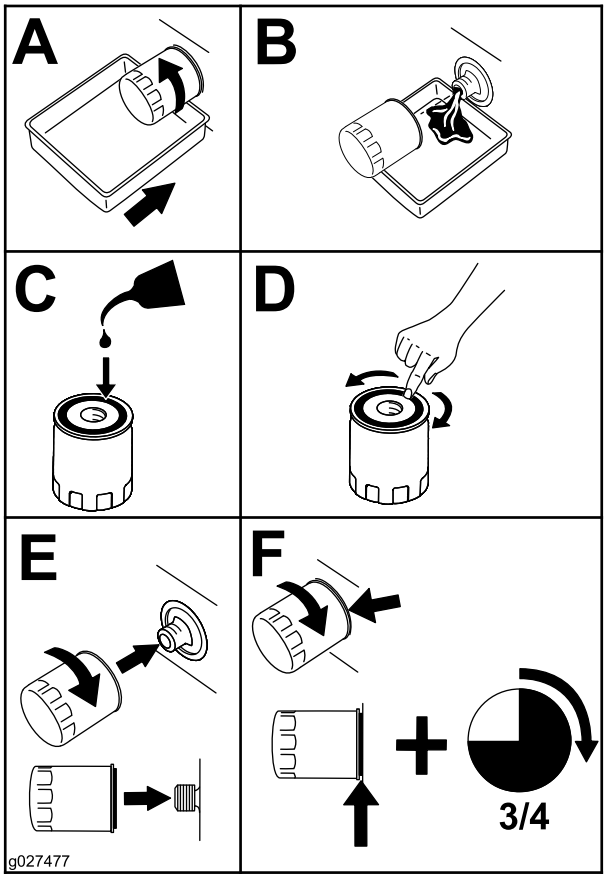

g027477

g027477

Figure 52

Note: Ensure that the oil-filter gasket touches the engine, and then turn the oil filter an extra 3/4 turn.

3. Fill the crankcase with the proper type of new oil; refer to Engine-Oil Specifications (page 42).

Servicing the Spark Plug(s)

Service Interval: Every 100 hours

Ensure that the air gap between the center and side electrodes is correct before installing the spark plug. Use a spark plug wrench for removing and installing the spark plug and a gapping tool or feeler gauge to check and adjust the air gap. Install a new spark plug if necessary.

Type of Spark Plug: NGK® BPR4ES or equivalent

Air Gap: 0.75 mm (0.03 inch)

Removing the Spark Plug(s)

1. Park the machine on a level surface, disengage the blade-control switch (PTO), and engage the parking brake.
2. Shut off the engine, remove the key, and wait for all moving parts to stop before leaving the operating position.
3. Clean the area around the base of the plug to keep dirt and debris out of the engine.
4. Locate and remove the spark plug(s) as shown in Figure 53.

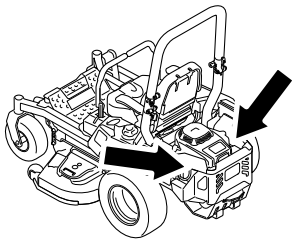

g036857

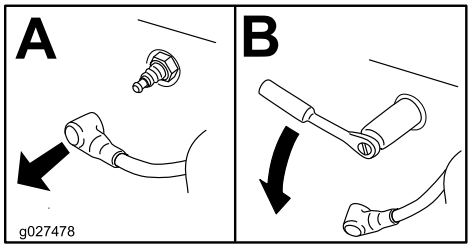

g027478

Figure 53

Checking the Spark Plug(s)

Important: **Do not clean the spark plug(s). Always replace the spark plug(s) when it has a black coating, worn electrodes, an oily film, or cracks.**

If you see light brown or gray on the insulator, the engine is operating properly. A black coating on the insulator usually means the air cleaner is dirty.

Set the gap to 0.75 mm (0.03 inch).

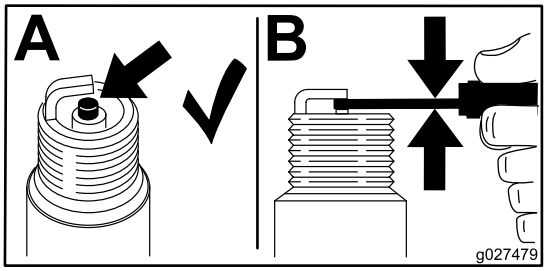

g027479

Figure 54

Installing the Spark Plug(s)

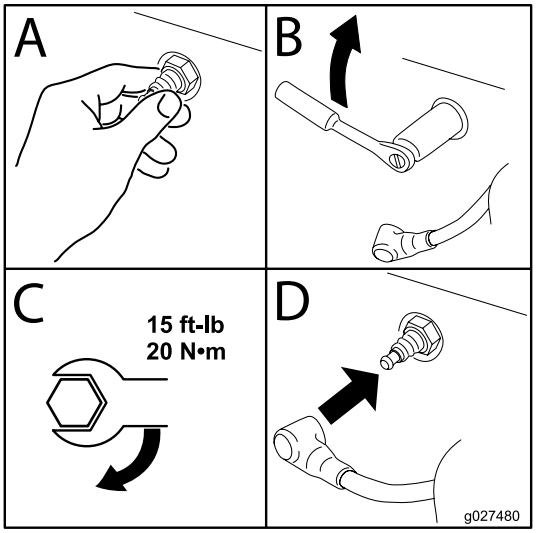

g027480

Figure 55

Servicing a Toro Engine

This section is only for machines with Toro engines. If your engine looks like the one shown in Figure 56, you have a Toro engine.

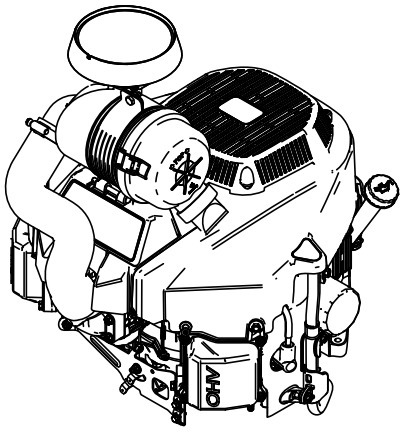

g296342

Figure 56

Servicing the Air Cleaner

Service Interval: Every 250 hours—For Toro engines—replace the air filter (more often in dirty or dusty conditions).

Note: Service the air cleaner more frequently if operating conditions are extremely dusty or sandy.

Removing the Filter

1. Park the machine on a level surface, disengage the blade-control switch (PTO), and engage the parking brake.
2. Shut off the engine, remove the key, and wait for all moving parts to stop before leaving the operating position.
3. Release the latches on the air cleaner and pull the air-cleaner cover off the air-cleaner body (Figure 58).

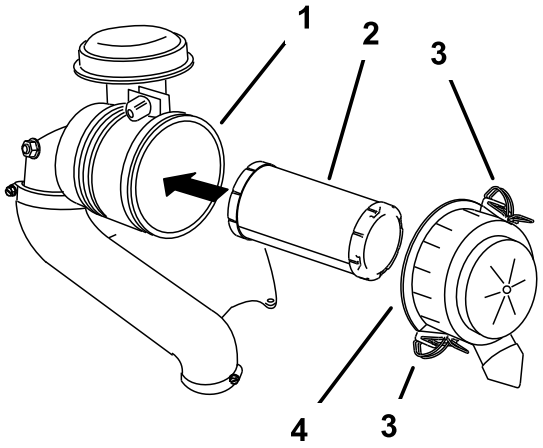

g230914

Figure 57

1. Air-cleaner body
2. Filter
3. Latch
4. Air-cleaner cover

4. Clean the inside of the air-cleaner cover with compressed air.
5. Gently slide the filter out of the air-cleaner body (Figure 58).

   Note: Avoid knocking the filter into the side of the body.

Inspecting the Filter

Inspect the filter for damage by looking into the filter while shining a bright light on the outside of the filter. If the filter is dirty, bent, or damaged, replace it.

Note: Holes in the filter appear as bright spots. Do not clean the filter.

Installing the Filter

Important: **To prevent engine damage, always operate the engine with the air filter and the cover installed.**

1. If you are installing a new filter, check the filter for shipping damage.

   Note: Do not use a damaged filter.
2. Carefully slide the filter into the air-cleaner body (Figure 58).

   Note: Ensure that the filter is fully seated by pushing on the outer rim while installing it.

   Important: **Do not press on the soft, inside area of the filter.**
3. Install the air-cleaner cover and secure the latches (Figure 58).

Servicing the Engine Oil

Service Interval: Before each use or daily—For Toro engines—check the engine-oil level.

After the first 5 hours/After the first month (whichever comes first)—For Toro engines—change the engine oil and filter.

Every 100 hours or yearly, whichever comes first—For Toro engines—change the engine oil and oil filter (more often in dirty or dusty conditions).

Engine-Oil Specifications

Oil Type: Detergent oil (API service SF, SG, SH, SJ, or SL)

Crankcase Capacity: 2.4 L (81 fl oz) with oil filter

Viscosity: See the table below.

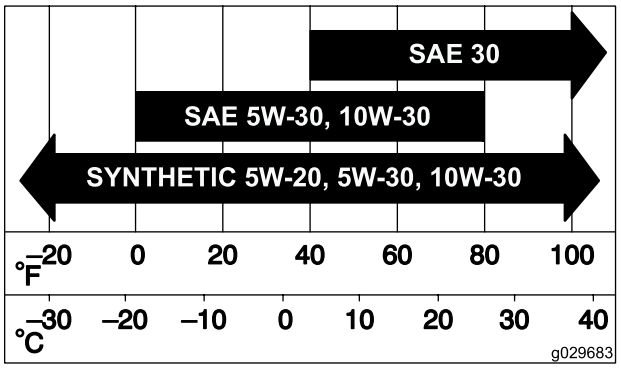

g029683

Figure 58

Checking the Engine-Oil Level

Note: Check the oil when the engine is cold.

Important: **If you overfill or underfill the engine crankcase with oil and run the engine, you may damage the engine.**

1. Park the machine on a level surface, disengage the blade-control switch (PTO), and engage the parking brake.
2. Shut off the engine, remove the key, and wait for all moving parts to stop before leaving the operating position.

   Note: Ensure that the engine is cool so that the oil has had time to drain into the sump.
3. To keep dirt, grass clippings, etc., out of the engine, clean the area around the oil-fill cap and dipstick before removing it (Figure 49).

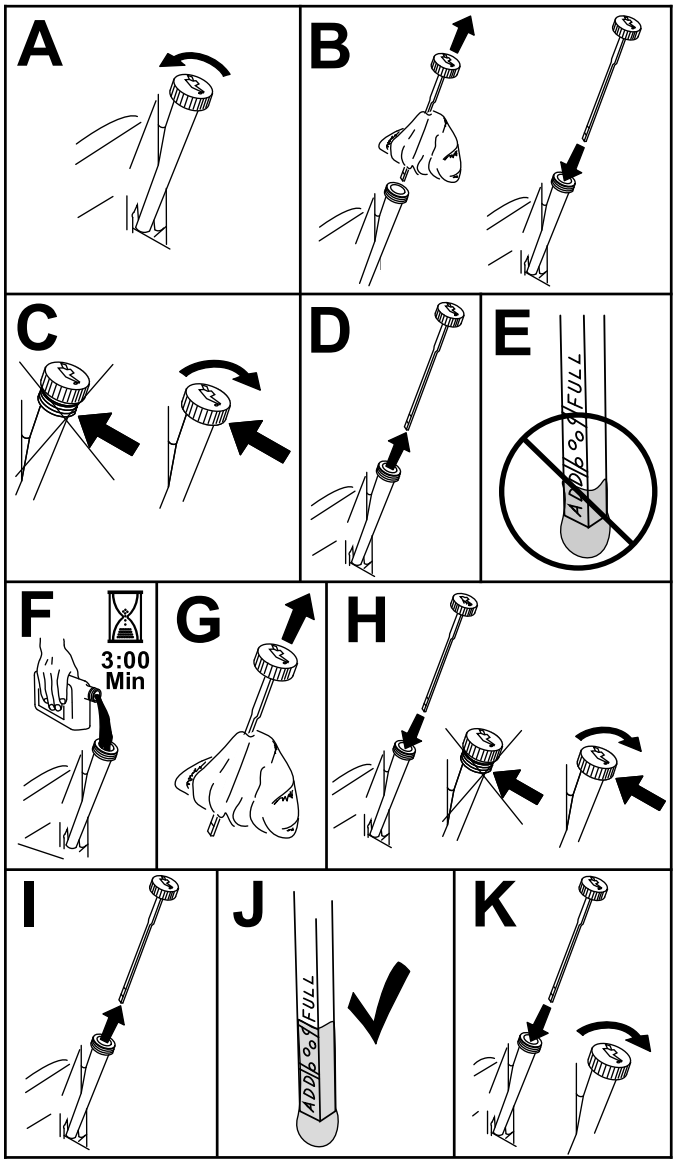

g311705

Figure 59

Changing the Engine Oil and Oil Filter

1. Park the machine on a level surface to ensure that the oil drains completely.
2. Disengage the blade-control switch (PTO) and engage the parking brake.
3. Shut off the engine, remove the key, and wait for all moving parts to stop before leaving the operating position.
4. Drain the oil from the engine.

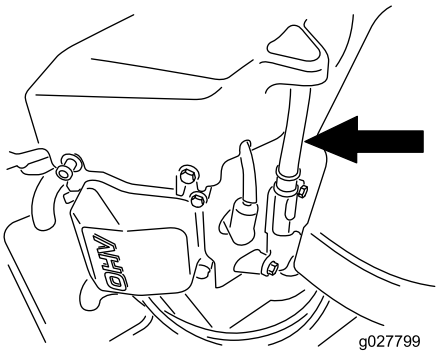

g027799

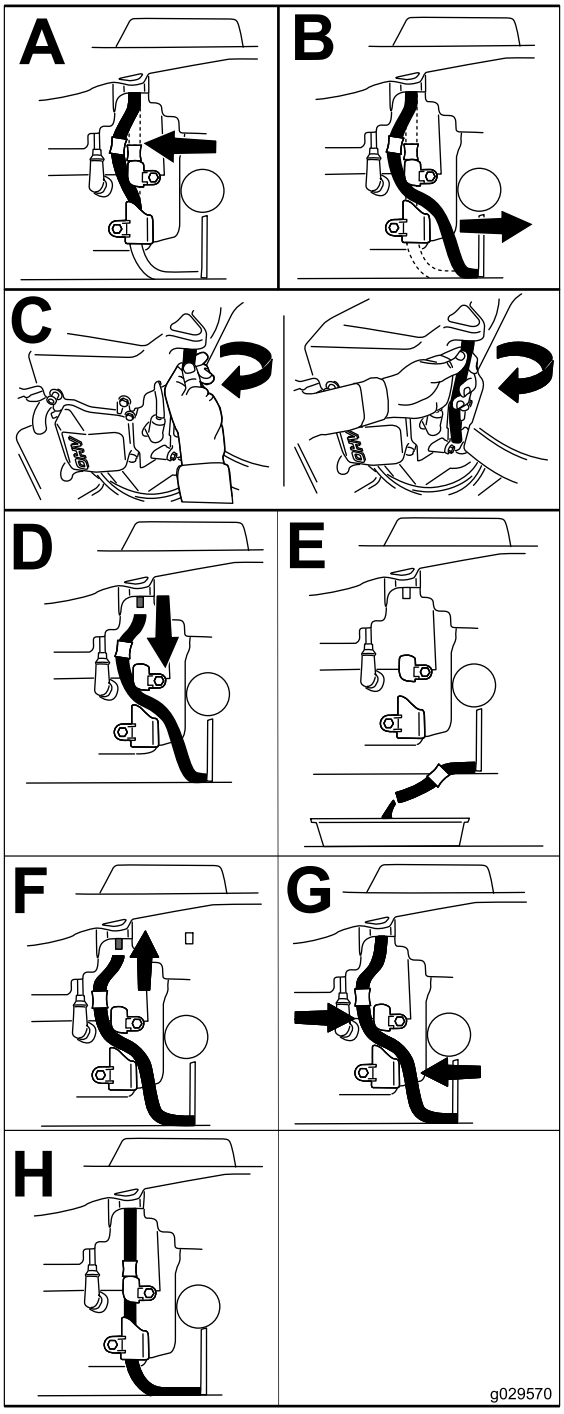

g029570

Figure 60

5. Change the engine-oil filter (Figure 61).

   Note: Ensure that the oil-filter gasket touches the engine and then turn the filter an extra 3/4 turn.

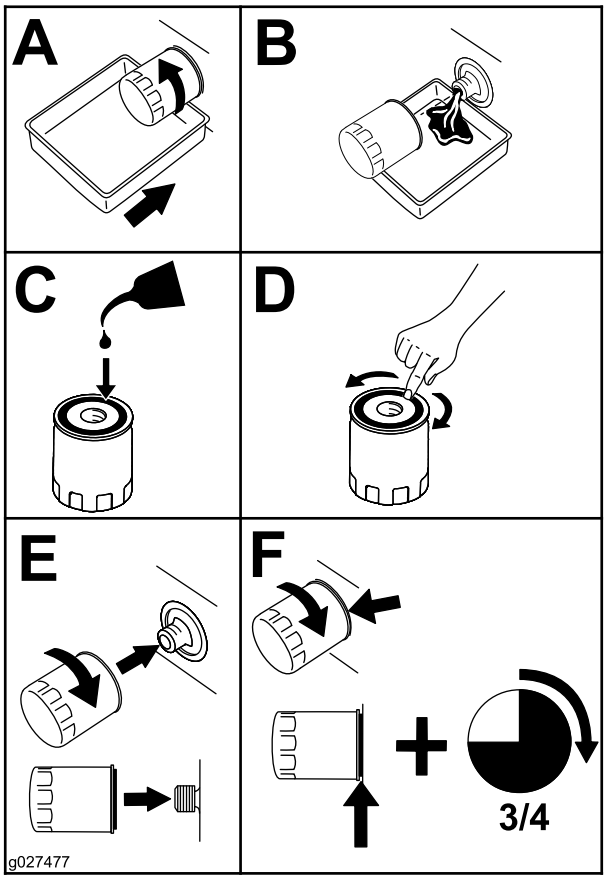

g027477

Figure 61

6. Slowly pour approximately 80% of the specified oil into the filler tube and slowly add the additional oil to bring it to the Full mark (Figure 62).

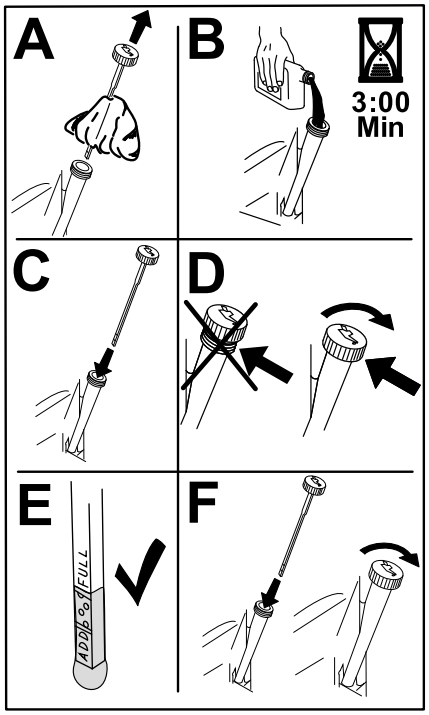

g235264

Figure 62

7. Dispose of the used oil at a recycling center.

Servicing the Spark Plug(s)

Service Interval: Every 100 hours or yearly, whichever comes first—For Toro engines—check the spark plug(s).

Every 200 hours/Every 2 years (whichever comes first)—For Toro engines—replace the spark plug(s).

Ensure that the air gap between the center and side electrodes is correct before installing the spark plug. Use a spark plug wrench for removing and installing the spark plug and a gapping tool or feeler gauge to check and adjust the air gap. Install a new spark plug if necessary.

Type: Champion® RN9YC or NGK® BPR6ES

Air gap: 0.76 mm (0.03 inch)

Removing the Spark Plug(s)

1. Park the machine on a level surface, disengage the blade-control switch (PTO), and engage the parking brake.
2. Shut off the engine, remove the key, and wait for all moving parts to stop before leaving the operating position.
3. Clean the area around the base of the plug to keep dirt and debris out of the engine.
4. Locate and remove the spark plug(s) as shown in Figure 64.

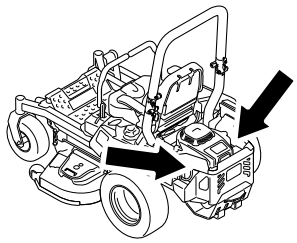

g036857

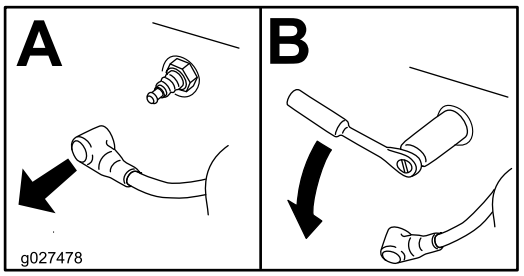

g027478

Figure 63

Checking the Spark Plug(s)

Important: **Do not clean the spark plug(s). Always replace the spark plug(s) when it has a black coating, worn electrodes, an oily film, or cracks.**

If you see light brown or gray on the insulator, the engine is operating properly. A black coating on the insulator usually means the air cleaner is dirty.

Set the gap to 0.76 mm (0.03 inch).

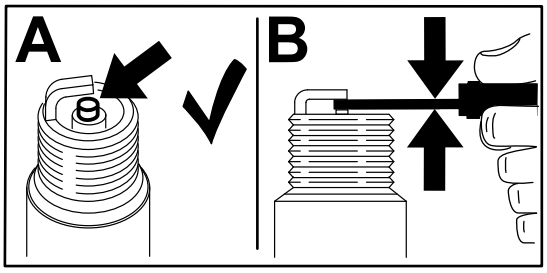

g206628

Figure 64

Installing the Spark Plug(s)

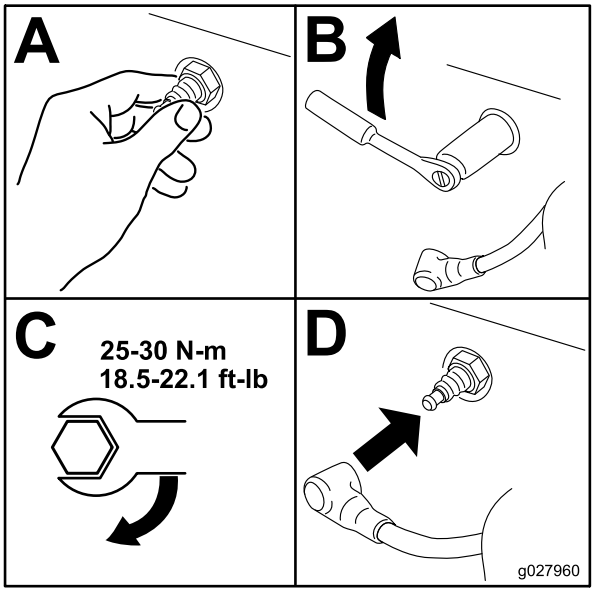

g027960

Figure 65

Servicing a Briggs and Stratton® Engine

Servicing the Air Cleaner

Every 250 hours—For Briggs and Stratton engines—Check the air cleaner (more often in dirty or dusty conditions).

Every 400 hours—For Briggs and Stratton engines—Replace the primary air filter.

Every 600 hours—For Briggs and Stratton engines—Replace the inner air filter.

Removing the Filters

1. Disengage the PTO, move the motion-control levers to the NEUTRAL-LOCK position, and engage the parking brake.
2. Shut off the engine, remove the key, and wait for all moving parts to stop before leaving the operating position.
3. Release the retaining clamps on the air cleaner and pull the air-cleaner cover off the air-cleaner body (Figure 66).

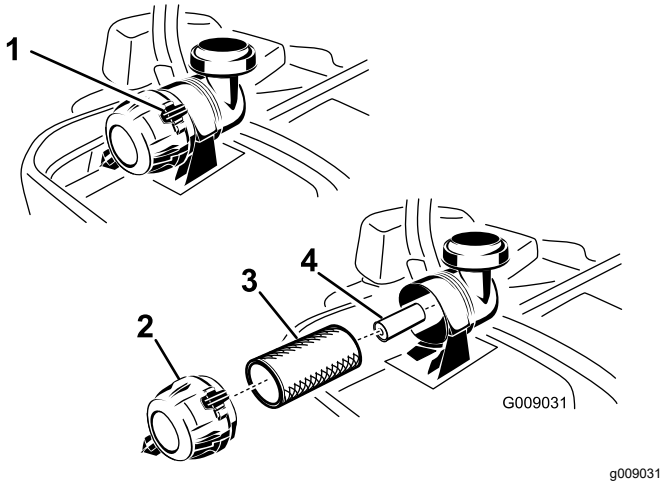

g009031

Figure 66

1. Air-cleaner clamps
2. Air-cleaner cover
3. Primary filter
4. Inner filter

4. Clean the inside of the air-cleaner cover with compressed air.
5. Gently slide the primary filter out of the air-cleaner body (Figure 66).

   Note: Avoid knocking the filter into the side of the body.
6. Remove the inner filter only to replace it.

Inspecting the Filters

1. Inspect the safety filter. If it is dirty, replace both the safety and primary filters.

   Important: **Do not attempt to clean the safety filter. If the safety filter is dirty, then the primary filter is damaged.**
2. Inspect the primary filter for damage by looking into the filter while shining a bright light on the outside of the filter. If the primary filter is dirty, bent, or damaged, replace it.

   Note: Holes in the filter appear as bright spots. Do not clean the primary filter.

Installing the Filters

Important: **To prevent engine damage, always operate the engine with both air filters and the cover installed.**

1. If you are installing new filters, check each filter for shipping damage.

   Note: Do not use a damaged filter.
2. If you are replacing the inner filter, carefully slide it into the filter body (Figure 66).
3. Carefully slide the primary filter over the safety filter (Figure 66).

Note: Ensure that the primary filter is fully seated by pushing on the outer rim while installing it.

Important: **Do not press on the soft, inside area of the filter.**

4. Install the air-cleaner cover with the breather cap down, and rotate so that the retaining clamps lock the cover in place (Figure 66).

Servicing the Engine Oil

Engine-Oil Specifications

Oil Type: Detergent oil (API service SJ or higher)

Oil Capacity: 2.0 L (68 fl oz) with the filter; 1.9 L (66 fl oz) without the filter

Viscosity: See the table below.

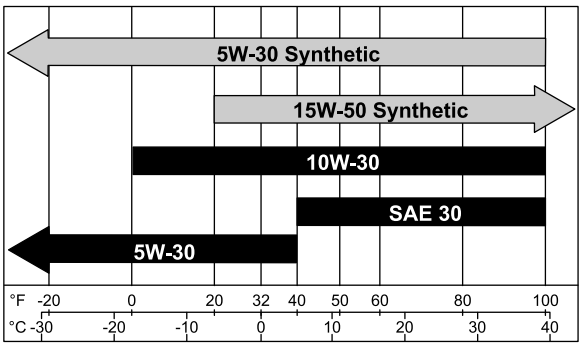

Figure 67

Checking the Engine-Oil Level

Service Interval: Before each use or daily

Note: Check the oil when the engine is cold.

⚠ WARNING

Contact with hot surfaces may cause personal injury.

Keep your hands, feet, face, clothing and other body parts away the muffler and other hot surfaces.

Important: **Do not overfill the crankcase with oil because damage to the engine may result. Do not run engine with oil below the low mark because the engine may be damaged.**

1. Park the machine on a level surface, disengage the PTO, and engage the parking brake.
2. Shut off the engine, remove the key, and wait for all moving parts to stop before leaving the operating position.
3. Check the engine-oil level as shown in (Figure 68).

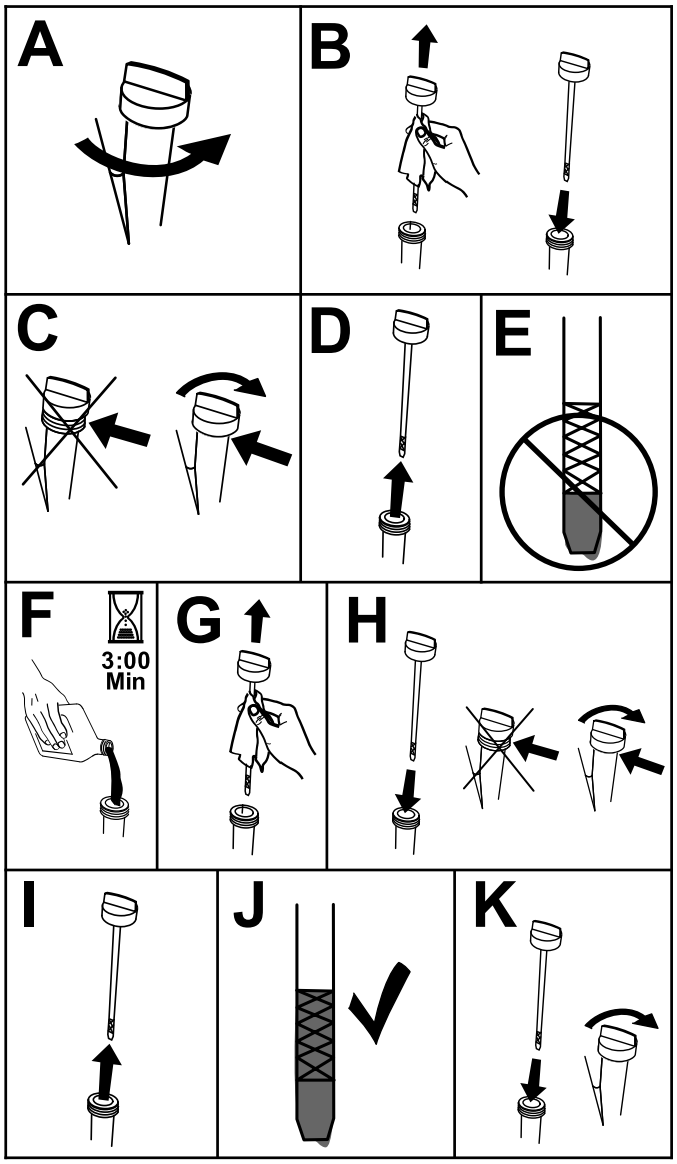

Figure 68

Changing the Engine Oil and Filter

Service Interval: Every 100 hours or yearly, whichever comes first

Note: Dispose of the used oil at a recycling center.

1. Park the machine so that the drain side is slightly lower than the opposite side to assure the oil drains completely.
2. Disengage the PTO, move the motion-control levers to the NEUTRAL-LOCK position, and engage the parking brake.
3. Shut off the engine, remove the key, and wait for all moving parts to stop before leaving the operating position.

4. Change the engine oil as shown.

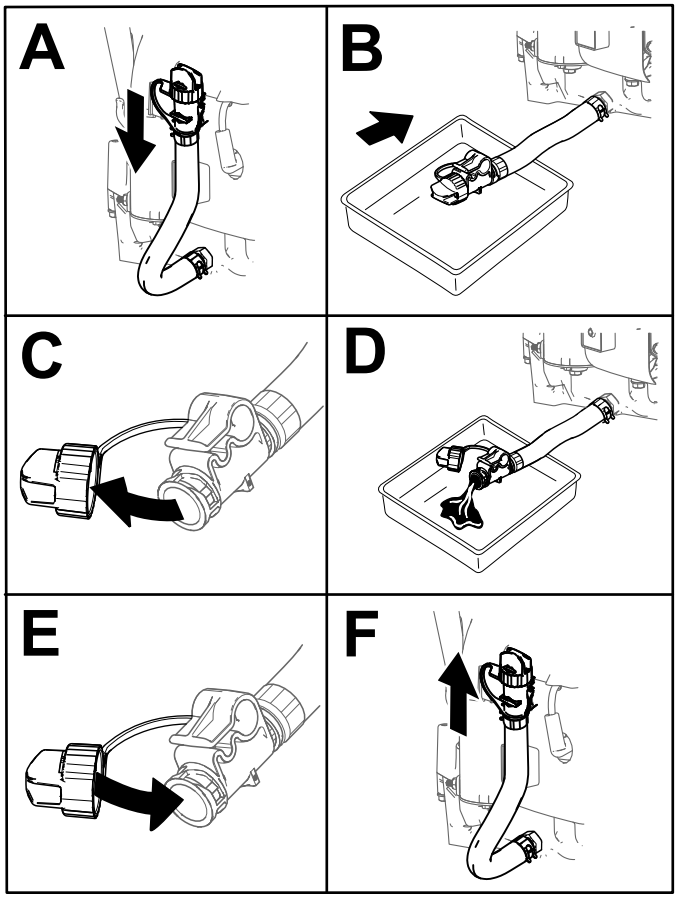

Figure 69

5. Change the engine-oil filter as shown.

   Note: Ensure that the oil-filter gasket touches the engine and then turn the filter an extra 3/4 turn.

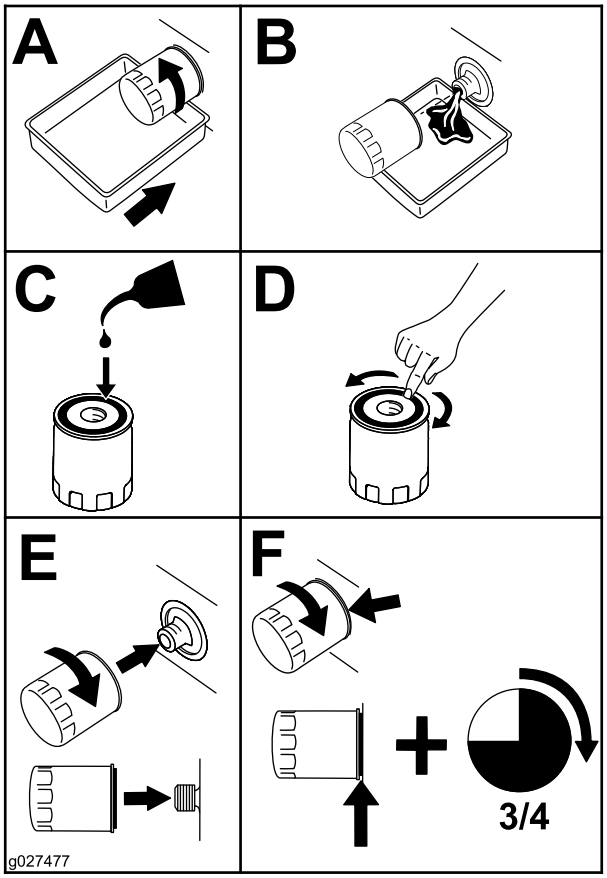

Figure 70

6. Slowly pour approximately 80% of the specified oil into the filler tube and slowly add the additional oil to bring it to the **Full** mark.

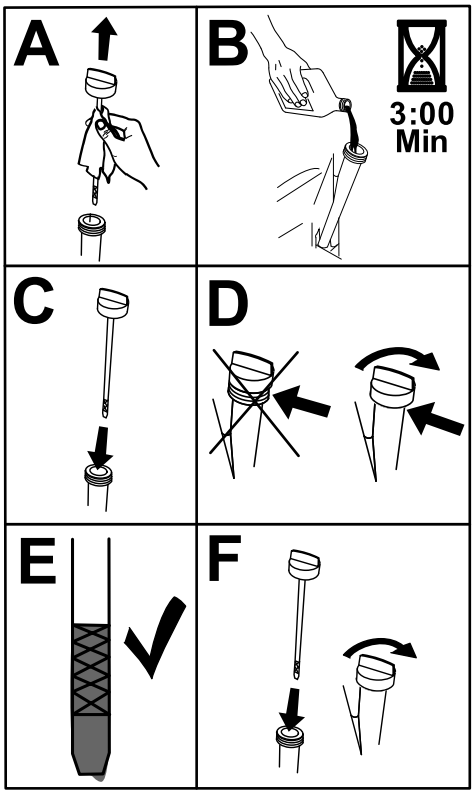

g373565

Figure 71

7. Start the engine and drive to a flat area.
8. Check the oil level again.

Servicing the Spark Plug

Service Interval: Every 100 hours or yearly, whichever comes first

Ensure that the air gap between the center and side electrodes is correct before installing the spark plug.

Use a spark plug wrench for removing and installing the spark plug(s) and a gapping tool/feeler gauge to check and adjust the air gap. Install a new spark plug(s) if necessary.

Type: Briggs and Stratton® 491055

Air gap: 0.76 mm (0.03 inch)

Removing the Spark Plug

1. Park the machine on a level surface, disengage the PTO, and engage the parking brake.
2. Shut off the engine, remove the key, and wait for all moving parts to stop before leaving the operating position.
3. Remove the spark plug as shown in Figure 72.

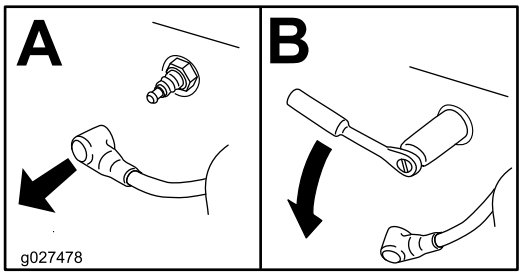

g027478

Figure 72

Checking the Spark Plug

Important: **Do not clean the spark plug(s). Always replace the spark plug(s) when it has a black coating, worn electrodes, an oily film, or cracks.**

If you see light brown or gray on the insulator, the engine is operating properly. A black coating on the insulator usually means the air cleaner is dirty.

Set the gap to 0.75 mm (0.03 inch).

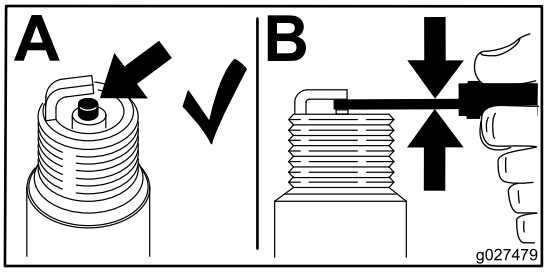

g027479

Figure 73

Installing the Spark Plug

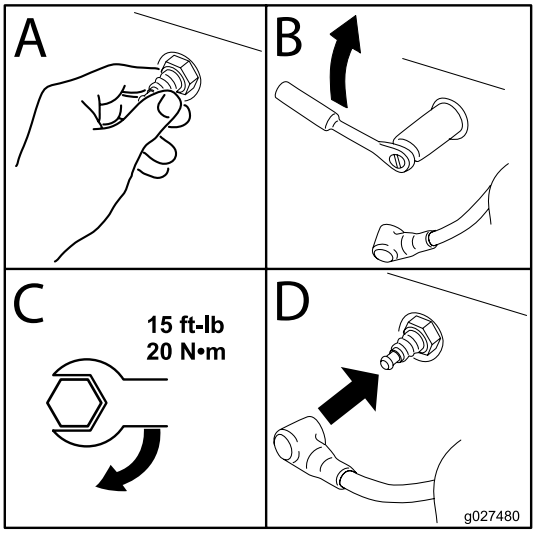

g027480

Figure 74

Cleaning the Blower Housing

To ensure proper cooling, ensure that the grass screen, cooling fins, and other external surfaces of the engine are kept clean at all times.

Important: **Operating the engine with a blocked grass screen, dirty or plugged cooling fins, and/or cooling shrouds removed, will cause engine damage due to overheating.**

Cleaning the Engine Screen

Service Interval: Before each use or daily—Clean the engine screen, engine-oil cooler, and the area around the engine.

Before each use or daily—Clean around the engine-exhaust system.

Before each use remove any buildup of grass, dirt, or other debris from the engine screen, engine exhaust, engine-oil cooler, and the area around the engine. This helps ensure adequate cooling and correct engine speed and reduces the possibility of overheating and mechanical damage to the engine.

Cleaning the Cooling System

Service Interval: Every 400 hours—Check and clean the engine cooling fins and shrouds (more often in dirty or dusty conditions).

1. Park the machine on a level surface, disengage the PTO, and engage the parking brake.
2. Shut off the engine, remove the key, and wait for all moving parts to stop before leaving the operating position.
3. Remove the air-intake screen and fan housing.
4. Clean the debris and grass from the engine parts.
5. Install the air-intake screen and the fan housing.

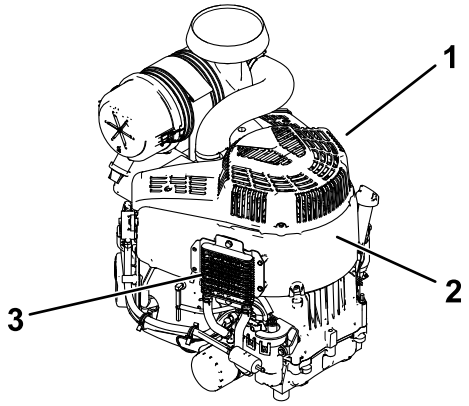

g403578

Figure 75

1. Guard and engine air-intake screen
2. Fan housing
3. Engine-oil cooler

Checking the Spark Arrester

For Machines with a Spark Arrester

Service Interval: Every 50 hours

⚠ WARNING

Hot exhaust-system components may ignite fuel vapors even after you shut off the engine. Hot particles exhausted during engine operation may ignite flammable materials, resulting in personal injury or property damage.

Do not refuel or run the engine unless the spark arrester is installed.

1. Park the machine on a level surface, disengage the PTO, and engage the parking brake.
2. Shut off the engine, remove the key, and wait for all moving parts to stop before leaving the operating position.
3. Wait for the muffler to cool.
4. If you see any breaks in the screen or welds, replace the arrester.
5. If the screen is plugged, remove the arrester, shake loose particles out of the arrester, and clean the screen with a wire brush (soak the screen in solvent if necessary).
6. Install the arrester on the exhaust outlet.

Replacing the Emissions-Air Intake Filter

Service Interval: Every 500 hours

1. Park the machine on a level surface, disengage the blade-control switch (PTO), and engage the parking brake.
2. Shut off the engine, remove the key, and wait for all moving parts to stop before leaving the operating position.
3. Remove the filter from the vent hose.
4. Insert a new filter into the end of the vent hose.

Fuel System Maintenance

⚠ DANGER

In certain conditions, fuel is extremely flammable and highly explosive. A fire or explosion from fuel can burn you and others and can damage property.

Refer to Fuel Safety (page 15) for a complete list of fuel related precautions.

Replacing the Fuel Filter

Service Interval: Every 500 hours/Yearly (whichever comes first) (more often in dusty, dirty conditions).

Important: **Install the fuel line hoses and secure with plastic ties the same as they were originally installed at the factory to keep the fuel line away from components that can cause fuel line damage.**

Never install a dirty filter after removing it from the fuel line.

The fuel filter is located near the engine on the left front of the engine.

1. Park the machine on a level surface, disengage the blade-control switch (PTO), and engage the parking brake.
2. Shut off the engine, remove the key, and wait for all moving parts to stop before leaving the operating position.
3. Allow the machine to cool down.
4. Replace the fuel filter (Figure 76).

   Note: Ensure that the flow-direction arrow on the replacement filter points toward the engine.

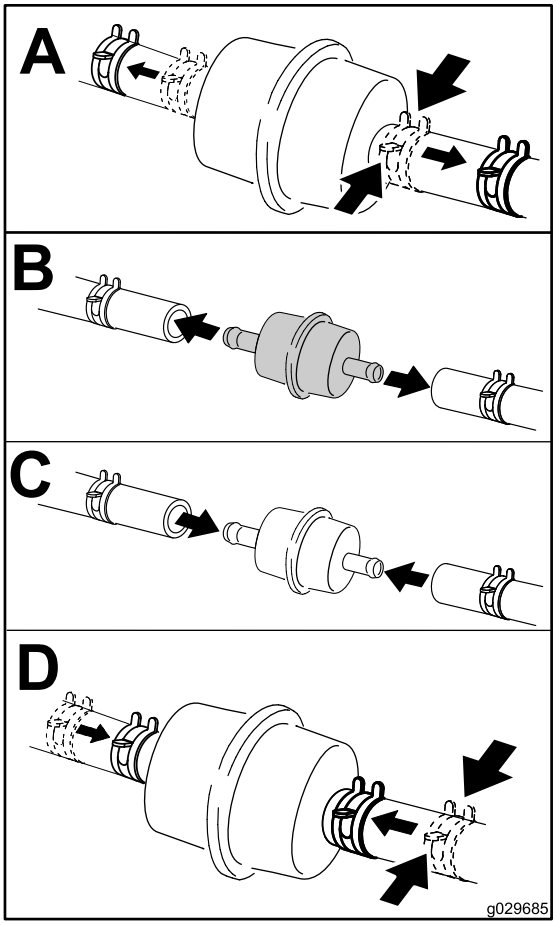

g029685

Figure 76

Servicing the Fuel Tank

Do not attempt to drain the fuel tank. Ensure that an Authorized Service Dealer drains the fuel tank and services any components of the fuel system.

Electrical System Maintenance

Electrical System Safety

- Disconnect the cable from the negative terminal of the battery before repairing the machine.
- Charge the battery in an open, well-ventilated area, away from sparks and flames. Unplug the charger before connecting or disconnecting the battery. Wear protective clothing and use insulated tools.

Servicing the Battery

Service Interval: Monthly

Removing the Battery

⚠ WARNING

Battery terminals or metal tools could short against metal machine components causing sparks. Sparks can cause the battery gasses to explode, resulting in personal injury.

- **When removing or installing the battery, do not allow the battery terminals to touch any metal parts of the machine.**
- **Do not allow metal tools to short between the battery terminals and metal parts of the machine.**

⚠ WARNING

Incorrectly removing the cables from battery could damage the machine and cables, causing sparks. Sparks can cause the battery gasses to explode, resulting in personal injury.

- **Always disconnect the negative (black) battery cable before disconnecting the positive (red) cable.**
- **Always connect the positive (red) battery cable before connecting the negative (black) cable.**

1. Park the machine on a level surface, disengage the blade-control switch (PTO), and engage the parking brake.
2. Shut off the engine, remove the key, and wait for all moving parts to stop before leaving the operating position.
3. Remove the battery as shown in Figure 77.

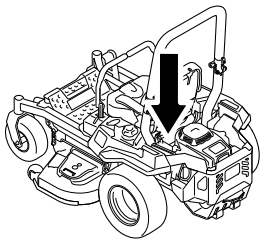

g036853

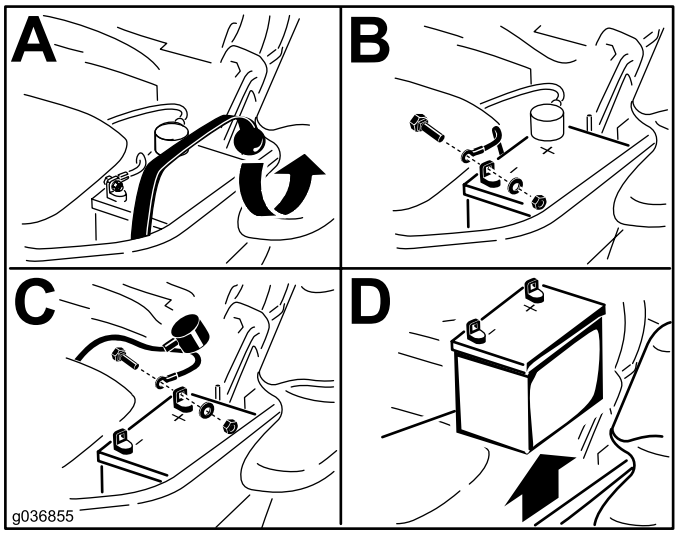

g036855

Figure 77

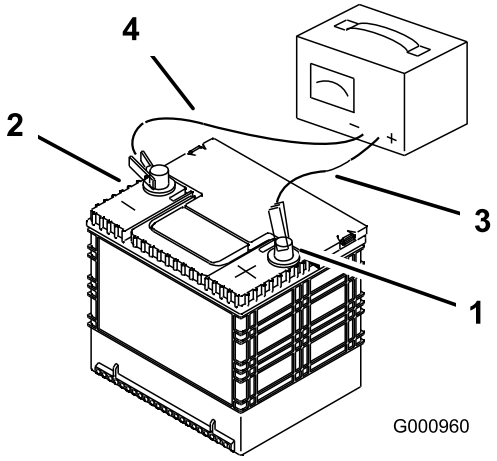

g000960

Figure 78

1. Positive (+) battery post
2. Negative (–) battery post
3. Red (+) charger lead
4. Black (–) charger lead

Charging the Battery

⚠ WARNING

Charging the battery produces gasses that can explode.

Never smoke near the battery and keep sparks and flames away from the battery.

Important: **Always keep the battery fully charged (1.265 specific gravity). This is especially important to prevent battery damage when the temperature is below 0°C (32°F).**

1. Remove the battery from the chassis; refer to Removing the Battery (page 57).
2. Charge the battery for 10 to 15 minutes at 25 to 30 A or for 30 minutes at 10 A.

   Note: Do not overcharge the battery.
3. When the battery is fully charged, unplug the charger from the electrical outlet, then disconnect the charger leads from the battery posts (Figure 78).
4. Install the battery in the machine and connect the battery cables; refer to Installing the Battery (page 59).

   Note: Do not run the machine with the battery disconnected; electrical damage may occur.

Installing the Battery

1. Position the battery in the tray with the terminal posts opposite from the hydraulic tank (Figure 77).
2. Install the positive (red) battery cable to the positive (+) battery terminal.
3. Install the negative (black) battery cable and ground wire to the negative (-) battery terminal.

   Note: For MyRide machines, ensure that the ground cable does not rub against the trailing arm or lower shock mount (Figure 79).

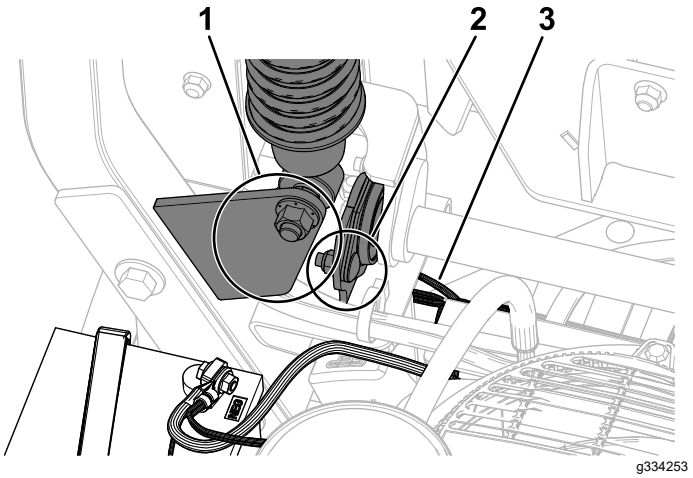

Figure 79

1. Ensure that the ground cable does not rub against the lower shock mount.
2. Ensure that the ground cable does not rub against the trailing arm.
3. Ground cable

4. Secure the cables with 2 bolts, 2 washers, and 2 locknuts (Figure 77).
5. Slide the red terminal boot onto the positive (+) battery terminal.
6. Secure the battery with the rubber strap (Figure 77).

Servicing the Fuses

The electrical system is protected by fuses. It requires no maintenance; however, if a fuse blows check the component and circuit for a malfunction or short.

The fuses are located in the rear, near the engine (Figure 80).

1. To replace the fuses, pull out the fuse to remove it.
2. Install a new fuse (Figure 80).

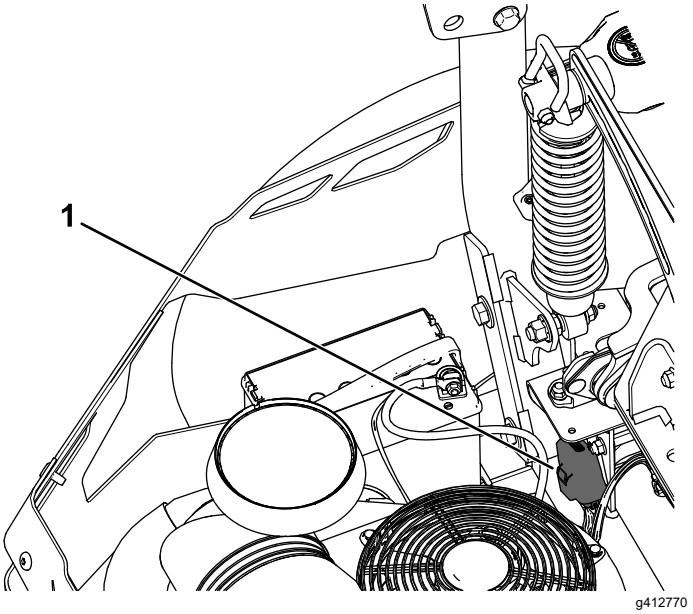

Figure 80

1. Fuse block

Drive System Maintenance

Checking the Seat Belt

Service Interval: Before each use or daily

Inspect the seat belt for wear, cuts, and proper operation of the retractor and buckle. Replace the seat belt if it is damaged.

Adjusting the Tracking

1. Disengage the blade-control switch (PTO).
2. Drive to an open, flat area and move the motion-control levers to the NEUTRAL-LOCK position.
3. Move the throttle midway between the FAST and SLOW positions.
4. Move both motion-control levers forward until they both hit the stops in the T-slot.
5. Check which way the machine tracks.
6. If the machine tracks to the right, insert a 3/16 inch hex wrench through the access hole in the left, front cover panel and rotate the tracking screw clockwise or counterclockwise to adjust the travel of the lever (Figure 81).
7. If the machine tracks to the left, insert a 3/16 inch hex wrench through the access hole in the right, front cover panel and rotate the tracking screw clockwise or counterclockwise to adjust the travel of the lever (Figure 81).
8. Drive the machine and check the full forward tracking.
9. Repeat the adjustment until the desired tracking is obtained.

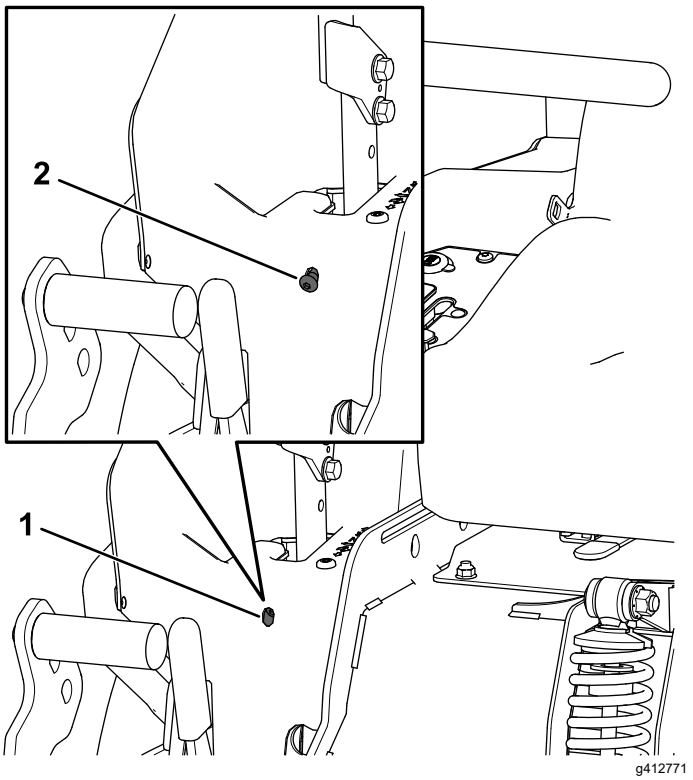

Figure 81

Right control lever shown

1. Access hole on the front cover panel
2. Tracking screw

Checking the Tire Pressure

For Machines with Pneumatic Tires Only

Service Interval: Every 50 hours/Monthly (whichever comes first) For machines with pneumatic tires only.

Maintain the air pressure in the caster tires and rear tires at 90 kPa (13 psi). Uneven tire pressure can cause uneven cut. Check the tires when they are cold to get the most accurate pressure reading.

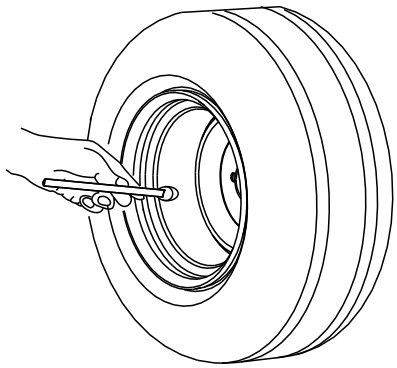

G001055

g001055

Figure 82

Checking the Wheel Lug Nuts

Check and torque the wheel lug nuts to 122 to 136 N·m (90 to 100 ft-lb).

Brake Maintenance

Adjusting the Parking Brake

Service Interval: Every 500 hours

Note: Perform this procedure whenever you remove or replace a brake component.

1. Park the machine on a level surface, disengage the blade-control switch (PTO), and engage the parking brake.
2. Shut off the engine, remove the key, and wait for all moving parts to stop before leaving the operating position.
3. Set up the machine to be pushed by hand. Refer to Using the Drive-Wheel Release Valves (page 33).
4. Raise the back of the machine up and support the machine with jack stands.

⚠ WARNING

Relying solely on mechanical or hydraulic jacks to support a raised machine for service or maintenance could be dangerous because the jacks may not provide enough support or may malfunction, allowing the machine to fall and possibly cause serious injury.

Do not rely solely on mechanical or hydraulic jacks for support. Use adequate jack stands or equivalent support.

5. Engage and disengage the parking brake and check each drive tire to ensure that each brake engages and disengages.
6. If an adjustment is necessary, disengage the parking brake. Remove the cotter pin from the brake linkage shaft (Figure 83).

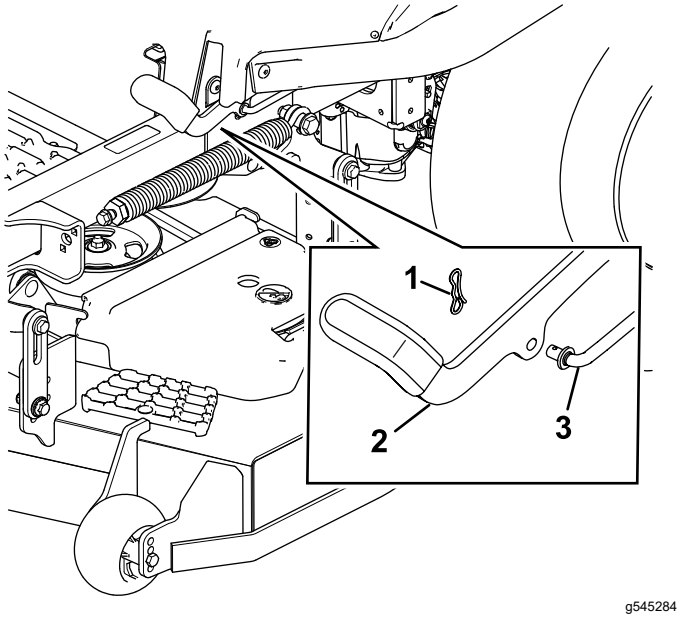

g545284

Figure 83

1. Cotter pin
2. Parking brake
3. Brake linkage shaft

7. Check both spring lengths as shown in Figure 84. If an adjustment is necessary, turn the top nut clockwise to shorten the spring and counterclockwise to lengthen it.

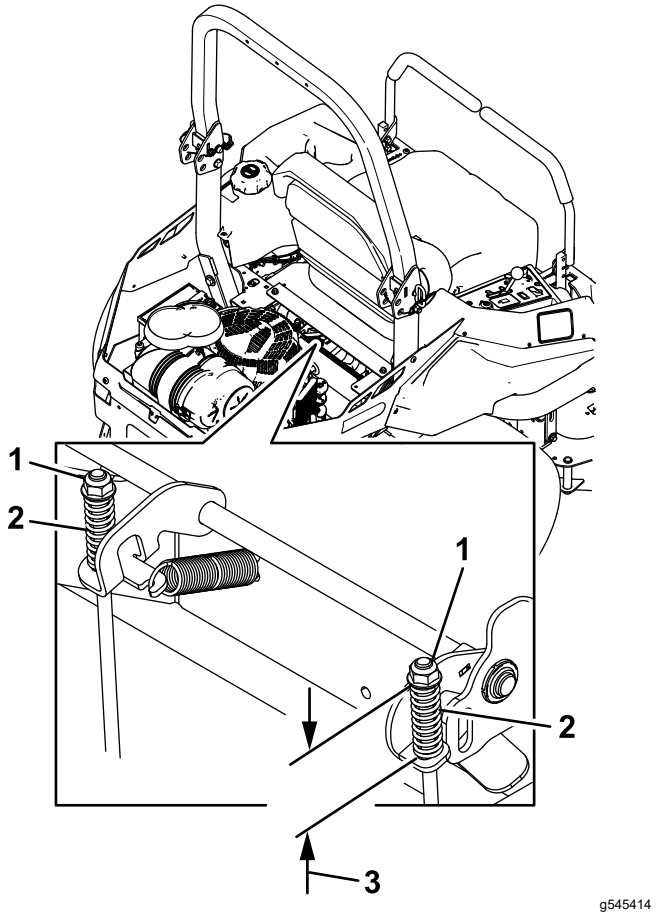

g545414

Figure 84

1. Top nut
2. Spring
3. 44 mm (1-3/4 inches)

8. Push the parking brake lever all the way forward and down.
9. Rotate the brake-linkage shaft until the end aligns with the hole in the lever.
   - Shorten the linkage by turning it clockwise.
   - Lengthen the linkage by turning it counterclockwise.
10. Insert the brake-linkage shaft into the parking-brake hole and secure with the cotter pin. Repeat step 5 and adjust if necessary.
11. When adjustment is complete, remove the jack stands or equivalent support and lower the machine.
12. Place the machine into the OPERATING position. Refer to Using the Drive-Wheel Release Valves (page 33).

Belt Maintenance

Inspecting the Belts

Service Interval: Every 50 hours

Replace the belt if it is worn. The signs of a worn belt include squealing while the belt is rotating; the blades slipping while cutting grass; and frayed edges, burn marks, and cracks on the belt.

Replacing the Mower Belt

1. Park the machine on a level surface, disengage the blade-control switch (PTO), and engage the parking brake.
2. Shut off the engine, remove the key, and wait for all moving parts to stop before leaving the operating position.
3. Lower the mower to the 76 mm (3 inches) height of cut.
4. Remove the belt covers (Figure 85).

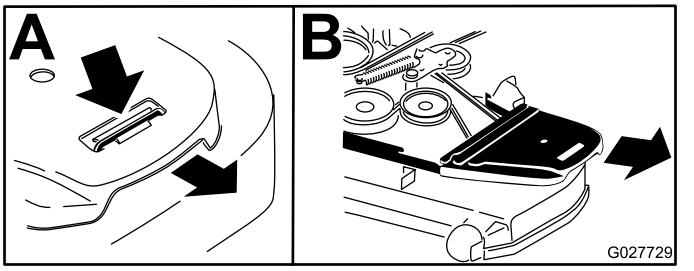

g027729

Figure 85

5. Use a 3/8-inch ratchet in the square hole in the idler arm to remove tension on the idler spring (Figure 86).
6. Remove the belt from the mower-deck pulleys and the clutch pulley.
7. Remove the belt guide on the spring-loaded idler arm (Figure 86).
8. Remove the existing belt.
9. Install the new belt around the mower pulleys and the clutch pulley under the engine (Figure 86).

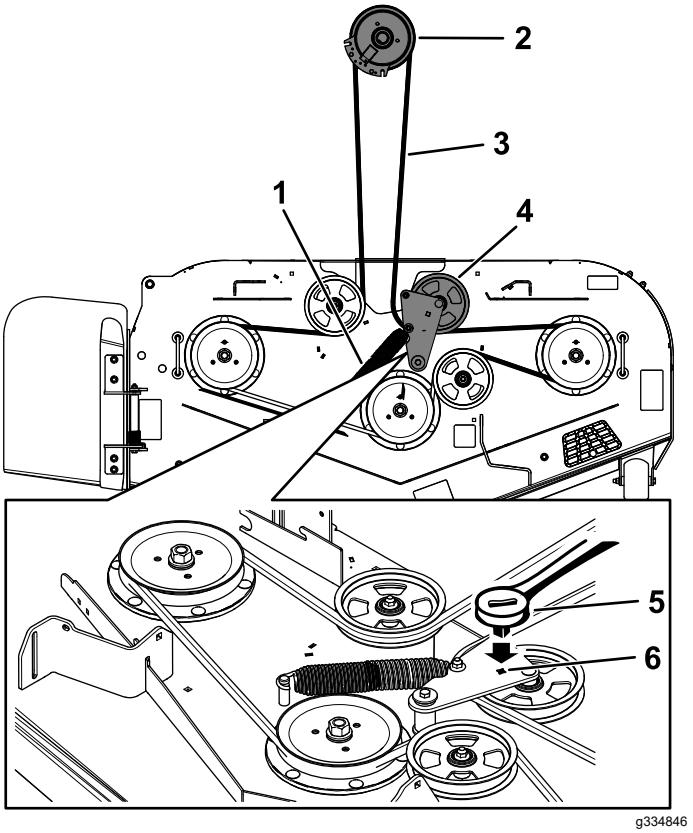

g334846

Figure 86

1. Spring
2. Clutch pulley
3. Mower belt
4. Spring-loaded idler assembly
5. Ratchet
6. Square hole in the idler arm for the ratchet

10. Install the belt guide on the idler arm (Figure 86).
11. Using the 3/8-inch ratchet in the square hole, install the idler spring (Figure 86).

    Note: Ensure that the spring ends are seated in the anchor grooves.
12. Install the belt covers (Figure 87).

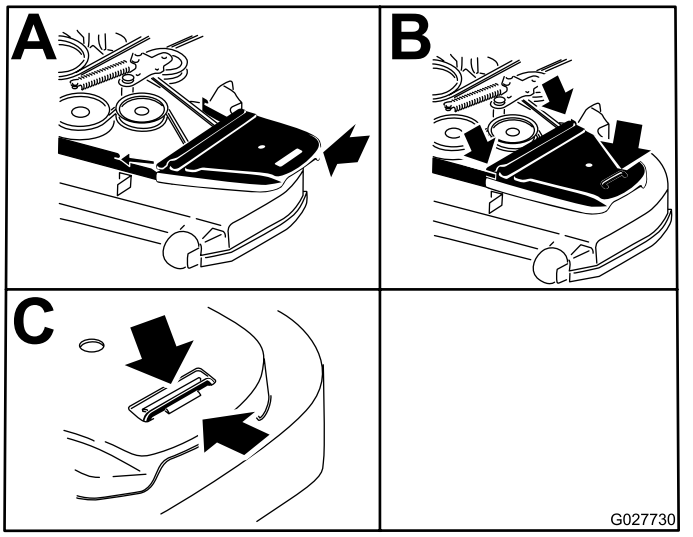

Figure 87

Replacing the Hydraulic Pump-Drive Belt

1. Park the machine on a level surface, disengage the blade-control switch (PTO), and engage the parking brake.
2. Shut off the engine, remove the key, and wait for all moving parts to stop before leaving the operating position.
3. Remove the mower belt; refer to Replacing the Mower Belt (page 63).
4. Raise the machine and support it with jack stands.
5. Use a 1/2-inch ratchet or breaker bar in one of the square holes in the idler arm to remove tension on the idler spring (Figure 88).
6. Remove the existing belt from the idler pulley, 2 hydraulic-pump-drive pulleys, and engine pulley (Figure 88).
7. Install the new belt around the idler pulley, engine pulley, and 2 hydraulic-pump pulleys (Figure 88).
8. Using the 1/2-inch ratchet or breaker bar in one of the square holes, install the idler spring.

   Note: Ensure that the spring ends are seated in the anchor grooves.
9. Install the mower belt; refer to Replacing the Mower Belt (page 63).

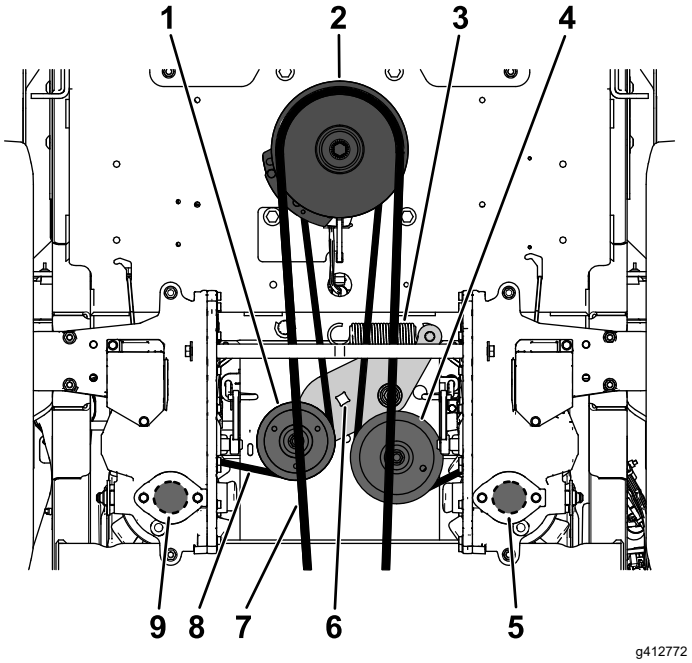

Figure 88

1. Fixed idler pulley
2. Engine pulley
3. Idler-spring post
4. Idler pulley
5. Right hydraulic-pump pulley
6. Square hole in the idler arm for the ratchet
7. Mower belt
8. Hydraulic pump-drive belt
9. Left hydraulic-pump pulley

Controls System Maintenance

Adjusting the Control-Handle Position

If the ends of the levers hit against each other, refer to Adjusting the Motion-Control Linkage (page 66).

Adjusting the Height

You can adjust the motion control levers higher or lower for maximum comfort.

1. Park the machine on a level surface, disengage the blade-control switch (PTO), and engage the parking brake.
2. Shut off the engine, remove the key, and wait for all moving parts to stop before leaving the operating position.
3. Remove the hardware holding the control lever to the control-arm shaft.

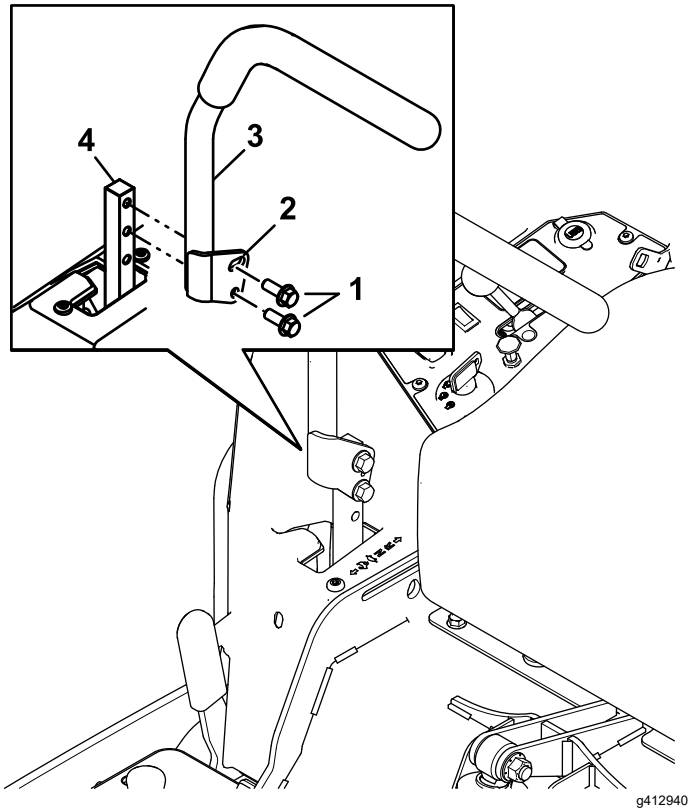

Figure 89

1. Bolts
2. Slotted hole
3. Control lever
4. Control-arm shaft

4. Move the control lever to the next set of holes. Secure the lever with the hardware.
5. Repeat the adjustment for the opposite control lever.

Adjusting the Tilt

1. Park the machine on a level surface, disengage the blade-control switch (PTO), and engage the parking brake.
2. Shut off the engine, remove the key, and wait for all moving parts to stop before leaving the operating position.
3. Loosen the upper bolt holding the control lever to the control arm shaft.
4. Loosen the lower bolt just enough to pivot the control lever fore or aft. Tighten both bolts to secure the control in the new position.
5. Repeat the adjustment for the opposite control lever.

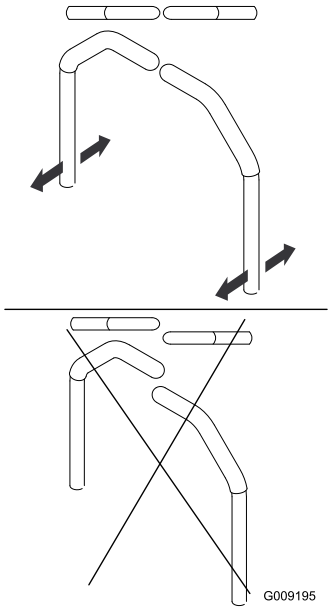

Figure 90

Adjusting the Motion-Control Linkage

Located on either side of the machine, below the seat, are the pump-control linkages. Rotating the end nut with a 1/2-inch deep socket wrench allows fine tuning adjustments so that the machine does not move in neutral. Any adjustments should be made for neutral positioning only.

⚠ WARNING

The engine must be running and the drive wheels turning so that you can perform the adjustments. Contact with moving parts or hot surfaces may cause personal injury.

Keep your fingers, hands, and clothing clear of rotating components and hot surfaces.

1. Park the machine on a level surface, disengage the blade-control switch (PTO), and engage the parking brake.
2. Shut off the engine, remove the key, and wait for all moving parts to stop before leaving the operating position.
3. Push the deck-lift pedal, remove the height-of-cut pin, and lower the mower deck to the ground
4. Raise the rear of the machine up and support it with jack stands (or equivalent support) just high enough to allow the drive wheels to turn freely.
5. Remove the electrical connection from the seat safety switch, located under the bottom cushion of the seat.

   Note: The switch is a part of the seat assembly.
6. **Temporarily** install a jumper wire across the terminals in the connector of the main wire harness.
7. Start the engine, run it at full throttle, and disengage the parking brake.

   Note: Before starting the engine, ensure that the parking brake is engaged and that the motion-control levers are out. You do not have to be in the seat.
8. Run the machine at least 5 minutes with the drive levers at full forward speed to bring the hydraulic fluid up to the operating temperature.

   Note: The motion-control levers must be in neutral while you are making any adjustments.
9. Bring the motion-control levers into the NEUTRAL position.
10. Adjust the pump-control-rod lengths by rotating the nut in the appropriate direction until the wheels slightly creep in reverse (Figure 91).

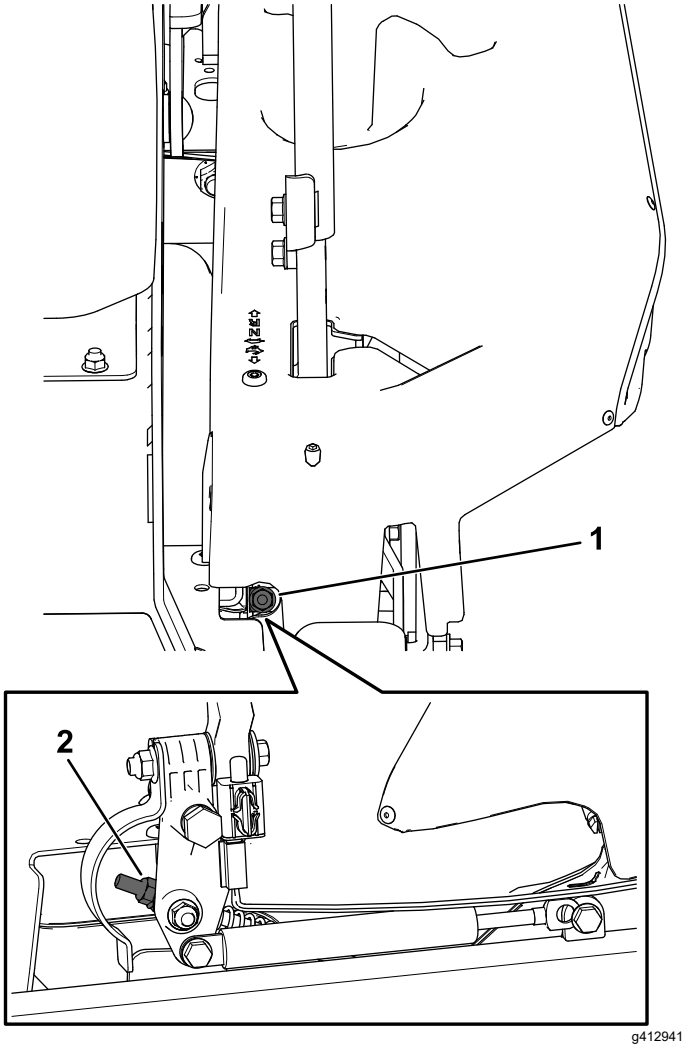

Figure 91

1. Access hole for 1/2-inch socket
2. Nut

11. Move the motion-control levers to the REVERSE position and while applying slight pressure to the lever, allow the return-to-neutral springs to bring the levers back to neutral.

    Note: The wheels should stop turning or slightly creep in reverse.
12. Shut off the machine.
13. Remove the jumper wire from the wire harness and plug the connector into the seat switch.
14. Remove the jack stands.
15. Raise the mower deck and install the height-of-cut pin.
16. Check and ensure that the machine does not creep in neutral with the parking brake disengaged.

Hydraulic System Maintenance

Hydraulic System Safety

- Seek immediate medical attention if fluid is injected into skin. Injected fluid must be surgically removed within a few hours by a doctor.
- Ensure that all hydraulic-fluid hoses and lines are in good condition and all hydraulic connections and fittings are tight before applying pressure to the hydraulic system.
- Keep your body and hands away from pinhole leaks or nozzles that eject high-pressure hydraulic fluid.
- Use cardboard or paper to find hydraulic leaks.
- Safely relieve all pressure in the hydraulic system before performing any work on the hydraulic system.

Hydraulic-Fluid Specifications

Hydraulic Fluid Type: Toro® HYPR-OIL™ 500 hydraulic fluid

Important: **Use the specified fluid. Other fluids could damage the hydraulic system.**

Hydraulic System Capacity (with filters removed): 1.7 L (1.8 US qt)

Checking the Hydraulic-Fluid Level

Service Interval: Before each use or daily

1. Allow the hydraulic fluid to cool down. Check the fluid level when the fluid is cold.
2. Remove the transaxle top port plug from each side and ensure that fluid appears at the bottom of each transaxle top port (Figure 92).

   If necessary, add Toro® HYPR-OIL™ 500 hydraulic fluid through the fill port until the fluid appears at the bottom of each transaxle top port (Figure 92and Figure 93).

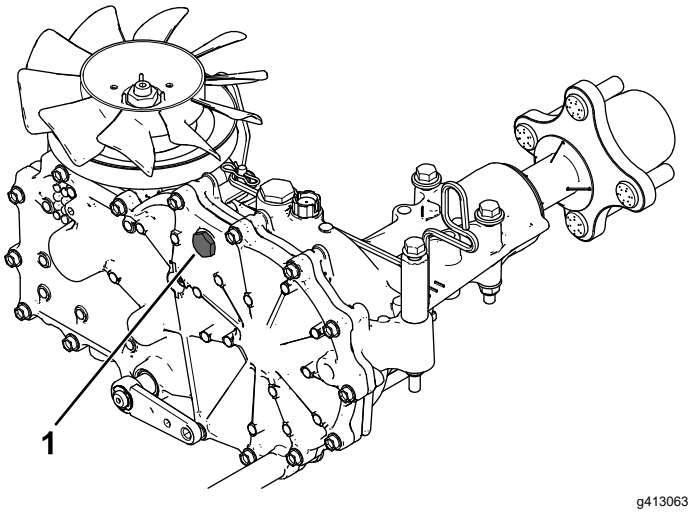

Figure 92

1. Top port plug

Changing the Hydraulic Fluid and Filters

Service Interval: After the first 75 hours—Change the hydraulic-system filters and fluid.

Every 400 hours—After the initial change—change the hydraulic-system filters and fluid when using Toro® HYPR-OIL™ 500 fluid. (Change it more often under dirty or dusty conditions)

To replace the hydraulic fluid, the filters need to be removed. Replace both at the same time; refer to Hydraulic-Fluid Specifications (page 67) for fluid specifications.

Purge any air in the system after you install the new filters and add fluid; refer to Bleeding the Hydraulic System (page 69). Repeat the bleeding process until the fluid remains at the FULL COLD line in the reservoir after purging. **Failure to properly perform this procedure can result in irreparable damage to the transaxle drive system.**

Removing Hydraulic-System Filters

1. Park the machine on a level surface, disengage the blade-control switch (PTO), and engage the parking brake.
2. Shut off the engine, remove the key, and wait for all moving parts to stop before leaving the operating position.
3. Allow the engine to cool.
4. Locate the filter and guards on each transaxle-drive system (Figure 93).
5. Remove the 3 screws securing the filter guard and guard (Figure 93).

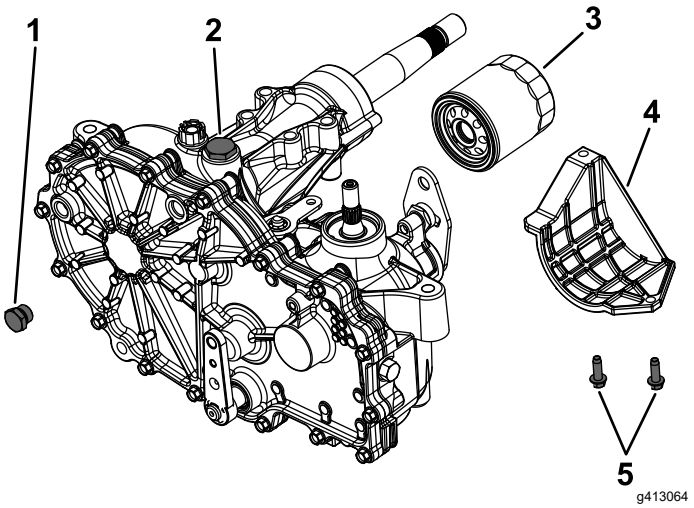

Figure 93

1. Top port plug
2. Fill port plug
3. Filter
4. Filter guard
5. Screws

6. Carefully clean the area around the filters.

   Important: **Do not allow dirt to enter the hydraulic system, or contamination may occur.**
7. Place a drain pan below the filter to catch the fluid that drains when the filter and vent plugs are removed.
8. Locate and remove the vent plug on each transmission.
9. Unscrew the filter to remove it, and allow the fluid to drain from the drive system.
10. Repeat this procedure for both filters.

Installing the Hydraulic-System Filters

1. Apply a thin coat of hydraulic fluid on the surface of the rubber seal of each filter.
2. Turn the filter clockwise until the rubber seal contacts the filter adapter, then tighten the filter an additional 3/4 to 1 full turn.
3. Repeat for the opposite filter.
4. Install the filter guards over each filter that you previously removed.
5. Use the 3 screws to secure the filter guards.
6. Verify that the vent plugs are removed before adding the fluid.
7. Remove the top port plug (Figure 93) from the left side and right side transaxles prior to filling with oil.

   This will allow the transaxles to vent during oil fill.

8. Fill with the specified fluid until fluid appears at the bottom of each transaxle top port.
9. Install the top port plug into each transaxle as the oil level reaches this port (Figure 93).
10. Torque the plugs to 20 N·m (15 ft-lb).
11. Proceed to Bleeding the Hydraulic System (page 69).

Important: **Failure to perform the *Bleeding the Hydraulic System* procedure after changing hydraulic filters and fluid can result in irreparable damage to the transaxle drive system.**

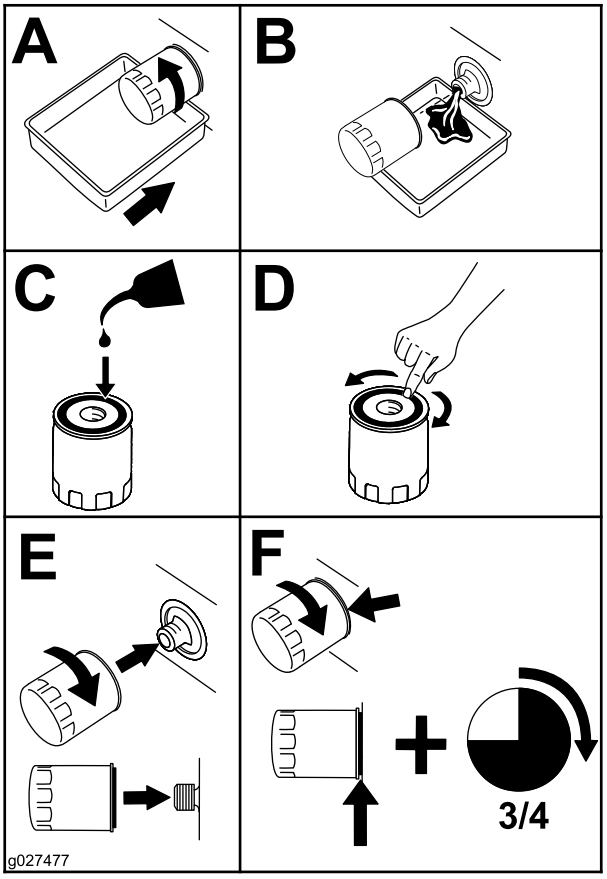

g027477

Figure 94

Bleeding the Hydraulic System

1. Raise the rear of machine and support it with jack stands (or equivalent support) just high enough to allow the drive wheels to turn freely.

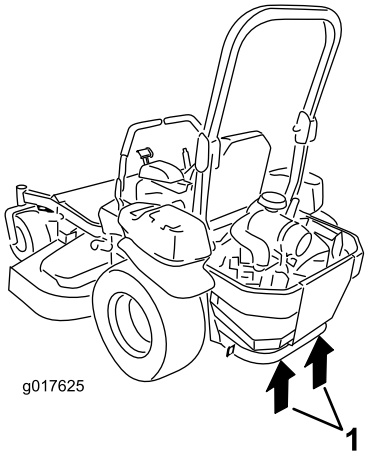

g017625

Figure 95

1. Jacking points

2. Start the engine, move the throttle control ahead to the 1/2 throttle position, and disengage the parking brake.
   A. Move the bypass levers into the pushing the machine position. With the bypass valves open and the engine running, slowly move the motion-control levers in both forward and reverse 5 or 6 times.
   B. Move the bypass levers into the operating the machine position.
   C. With the bypass valve closed and the engine running, slowly move the control lever in both forward and reverse directions 5 to 6 times.
3. Repeat step 2 until all the air is completely purged from the system.

   Note: When the transaxle operates at normal noise levels, moves smoothly forward, and reverses at normal speeds, it is purged.
4. Check the fluid level; refer to Checking the Hydraulic-Fluid Level (page 67).

Mower Deck Maintenance

Blade Safety

- Inspect the blades periodically for wear or damage.
- Use care when checking the blades. Wrap the blades or wear gloves, and use caution when servicing the blades. Only replace or sharpen the blades; never straighten or weld them.
- On multi-bladed machines, take care as rotating one blade can cause other blades to rotate.
- Replace worn or damaged blades and bolts in sets to preserve balance.

Servicing the Cutting Blades

Before Inspecting or Servicing the Blades

1. Park the machine on a level surface, disengage the blade-control switch (PTO), and engage the parking brake.
2. Shut off the engine, remove the key, and disconnect the spark-plug wires from the spark plugs.

Inspecting the Blades

Service Interval: Before each use or daily

1. Inspect the cutting edges (Figure 96).
2. If the edges are not sharp or have nicks, remove and sharpen the blade; refer to Sharpening the Blades (page 72).
3. Inspect the blades, especially in the curved area.
4. If you notice any cracks, wear, or a slot forming in this area, immediately install a new blade (Figure 96).

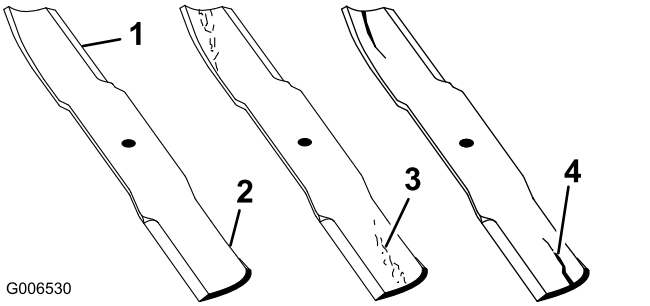

Figure 96

1. Cutting edge
2. Curved area
3. Wear/slot forming
4. Crack

Checking for Bent Blades

Note: The machine must be on a level surface for the following procedure.

1. Raise the mower deck to the highest height-of-cut position.
2. While wearing thickly padded gloves, or other adequate hand protection, slowly rotate the blade into a position that allows you to measure the distance between the cutting edge and the level surface the machine is on (Figure 97).

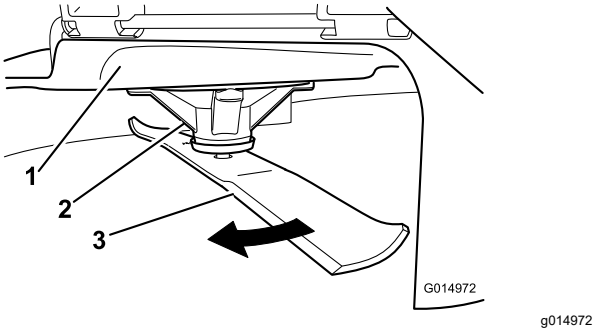

Figure 97

1. Deck
2. Spindle housing
3. Blade

3. Measure from the tip of the blade to the flat surface (Figure 98).

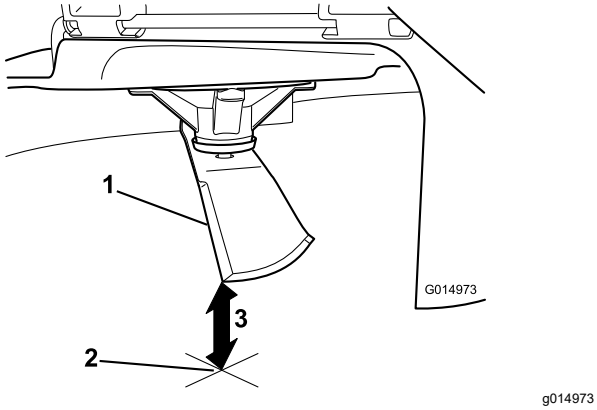

g014973

Figure 98

1. Blade (in position for measuring)
2. Level surface
3. Measured distance between blade and the surface (A)

4. Rotate the same blade 180 degrees so that the opposing cutting edge is now in the same position (Figure 99).

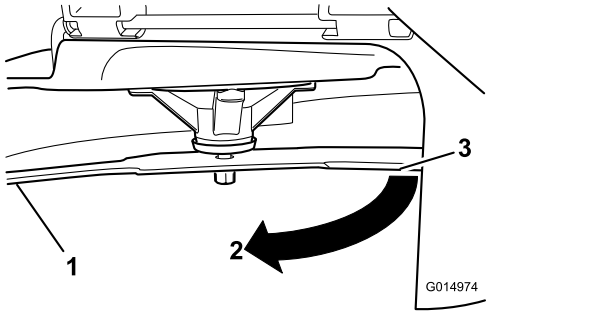

g014974

Figure 99

1. Blade (side previously measured)
2. Measurement (position used previously)
3. Opposing side of blade being moved into measurement position

5. Measure from the tip of the blade to the flat surface (Figure 100).

   Note: The variance should be no more than 3 mm (1/8 inch).

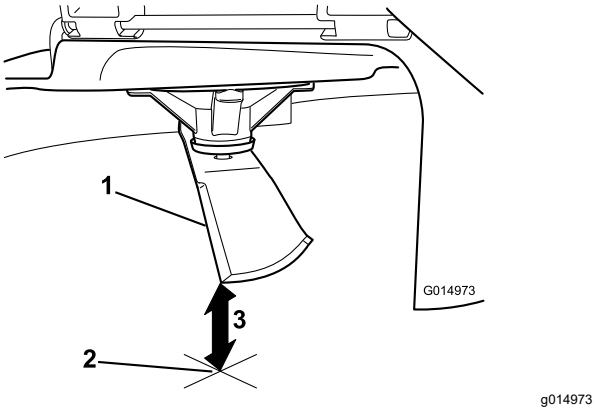

g014973

Figure 100

1. Opposite blade edge (in position for measuring)
2. Level surface
3. Second measured distance between blade and surface (B)

   A. If the difference between A and B is greater than 3 mm (1/8 inch), replace the blade with a new blade; refer to Removing the Blades (page 71) and Installing the Blades (page 72).

      Note: If a bent blade is replaced with a new blade, and the dimension obtained continues to exceed 3 mm (1/8 inch), the blade spindle could be bent. Contact an Authorized Service Dealer for service.

   B. If the variance is within constraints, move to the next blade.

6. Repeat this procedure on each blade.

Removing the Blades

Replace the blades if they hit a solid object, or if the blade is out of balance or bent.

1. Hold the spindle shaft with a wrench.
2. Remove the blade bolt, curved washer, and blade from the spindle shaft (Figure 101).

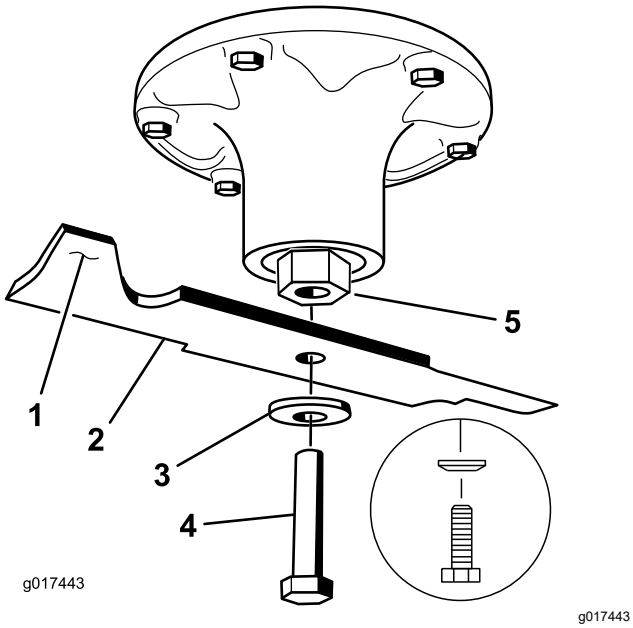

Figure 101

1. Sail area of the blade
2. Blade
3. Curved washer
4. Blade bolt
5. Spindle shaft

Sharpening the Blades

1. Use a file to sharpen the cutting edge at both ends of the blade (Figure 102).

   Note: Maintain the original angle.

   Note: The blade retains its balance if the same amount of material is removed from both cutting edges.

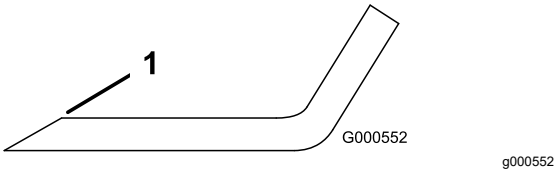

Figure 102

1. Sharpen at original angle.

2. Check the balance of the blade by putting it on a blade balancer (Figure 103).

   Note: If the blade stays in a horizontal position, the blade is balanced and can be used.

   Note: If the blade is not balanced, file some metal off the end of the sail area only (Figure 102).

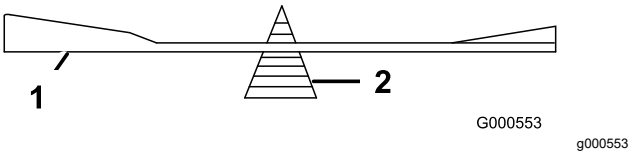

Figure 103

1. Blade
2. Balancer

3. Repeat this procedure until the blade is balanced.

Installing the Blades

1. Install the blade onto the spindle shaft (Figure 101).

   Important: **The curved part of the blade must point upward toward the inside of the mower to ensure proper cutting.**

2. Install the curved washer and blade bolt (Figure 101).

   Note: Install the curved-washer cone toward the bolt head.

3. Torque the blade bolt to 115 to 150 N·m (85 to 110 ft-lb).

Adjusting the Side-to-Side Leveling and the Blade Slope

Check to ensure that the mower deck is level any time you install the mower or when you see an uneven cut on your lawn.

Check the mower deck for bent blades prior to leveling, and remove and replace any bent blades; refer to Checking for Bent Blades (page 70) before continuing.

Level the mower deck side-to-side first; then you can adjust the front-to-rear slope.

Requirements:

- The machine must be on a level surface.
- All tires must be properly inflated; refer to Checking the Tire Pressure (page 61).

1. Park the machine on a level surface, disengage the blade-control switch (PTO), and engage the parking brake.
2. Shut off the engine, remove the key, and wait for all moving parts to stop before leaving the operating position.
3. Check the tire pressure in the drive tires; refer to Checking the Tire Pressure (page 61).
4. Position the mower deck in the transport-lock position or the highest height-of-cut setting.
5. Carefully rotate the blades from side to side.
6. Measure between the blade tip and the flat surface (Figure 104). If both measurements are not within 5 mm (3/16 inch), adjust the leveling; continue with this procedure.

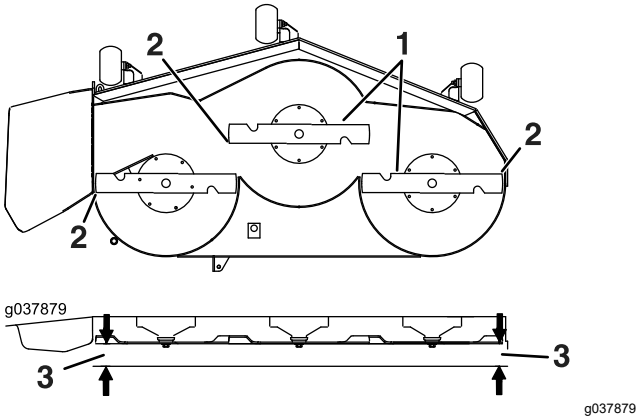

Figure 104

1. Blades side to side
2. Blade tip
3. Measure from the tip of the blade to the flat surface here.

7. Check the front-to-rear blade level (Figure 105). Ensure the front blade tip is lower than the rear blade tip as shown in the block height and rake table. If adjustment is needed, continue with this procedure.

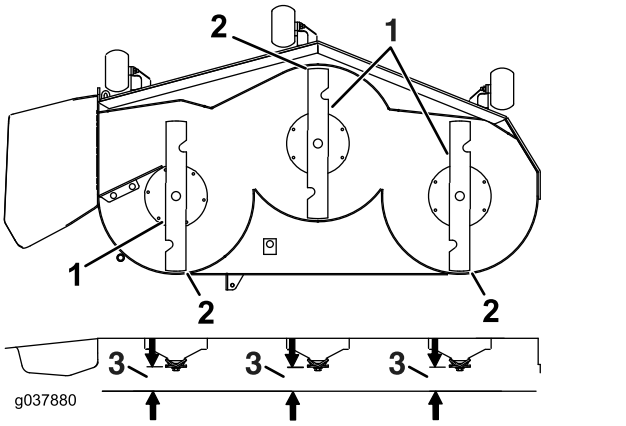

Figure 105

1. Blades front to rear
2. Blade tip
3. Measure from the tip of the blade to the flat surface here.

8. Set the anti-scalp rollers to top holes or remove them completely for this adjustment.
9. Raise the deck to the transport position (127 mm or 5 inches).
10. Slowly loosen the adjusting screw on the lift-assist spring until you can remove the screw (Figure 106).

Note: Save the screw for installation.

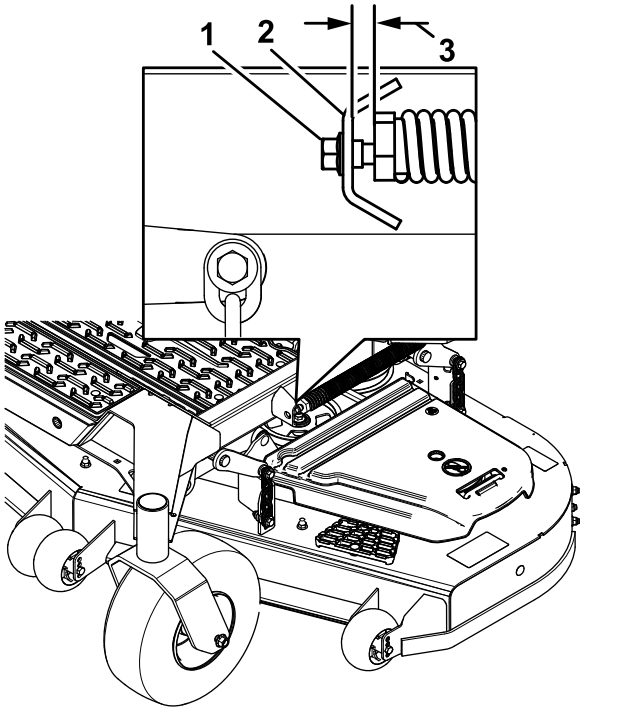

g334850

Figure 106

1. Adjusting screw
2. Bracket
3. Set the gap to 22 to 29 mm (7/8 to 1-1/8 inches).

11. Place 2 blocks (see Block Height and Rake Table) under the rear edge of the cutting deck skirt; 1 on each side of the cutting deck (Figure 107).
12. Set the height-of-cut lever to the 76 mm (3 inches) position; refer to Adjusting the Height of Cut (page 29).
13. Place 2 blocks under each side of the front edge of the deck, but not under the anti-scalp roller brackets or welds.

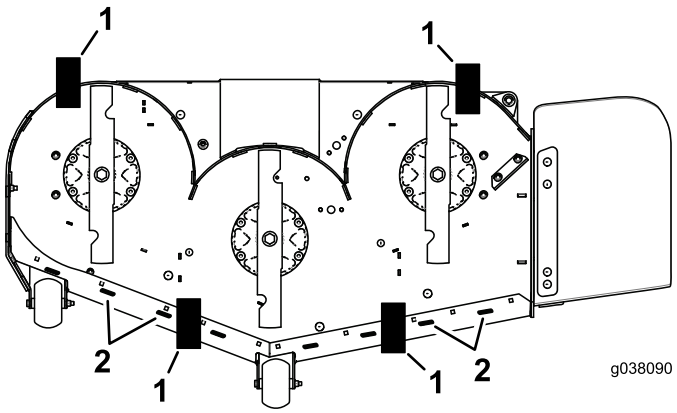

g038090

g038090

Figure 107
Bottom view

1. Block—73 mm (2-7/8 inches)
2. Welds

Block Height and Rake Table

Deck Size	Front Block Height	Rake
All mower decks	73 mm (2-7/8 inches)	4.8 to 6.4 mm (3/16 to 1/4 inch)

14. Carefully rotate the blades side to side (Figure 104).
15. Lower the mower deck to the 76 mm (3 inches) position; refer to Adjusting the Height of Cut (page 29).
16. Loosen the bolts (Figure 108) on all 4 corners and ensure that the mower deck is sitting securely on all 4 blocks.
17. Remove any slack from the deck hangers and make sure the deck-lift foot lever is pushed back against the stop.
18. Tighten the 4 bolts.

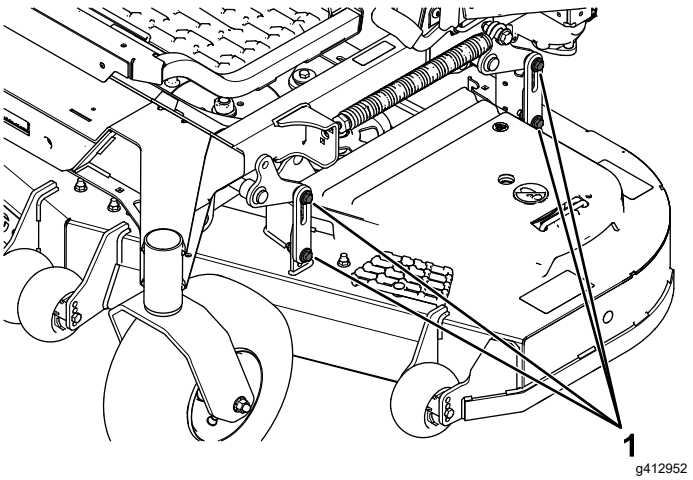

g412952

Figure 108

1. Deck-lift arm bolts

19. Ensure that the blocks fit snugly under the deck skirt and that all attachment bolts are tight
20. Continue leveling the deck by checking the front-to-rear blade slope.
21. Check the blades for levelness and repeat deck leveling procedure if necessary.
22. Raise the deck to the transport position (127 mm or 5 inches).
23. Install the lift-assist spring adjusting screw previously removed in step 10.
24. Set the gap between the spring and the bracket to 22 to 29 mm (7/8 to 1-1/8 inches).

Removing the Mower Deck

Before servicing or removing the mower deck, lock out the spring-loaded deck arms.

1. Park the machine on a level surface, disengage the blade-control switch (PTO), and engage the parking brake.
2. Shut off the engine, remove the key, and wait for all moving parts to stop before leaving the operating position.
3. Place the height-adjustment pin in the 76 mm (3 inches) cutting-height location.
4. Remove the belt covers.
5. Loosen the mower deck idler and remove the mower belt; refer to Belt Maintenance (page 63).
6. Remove the bolts and nuts from the front of the plate under the footrest.
7. Remove and retain the bolts and nuts on both sides of the machine (Figure 109).
8. Slide the deck out to the right side of the machine.

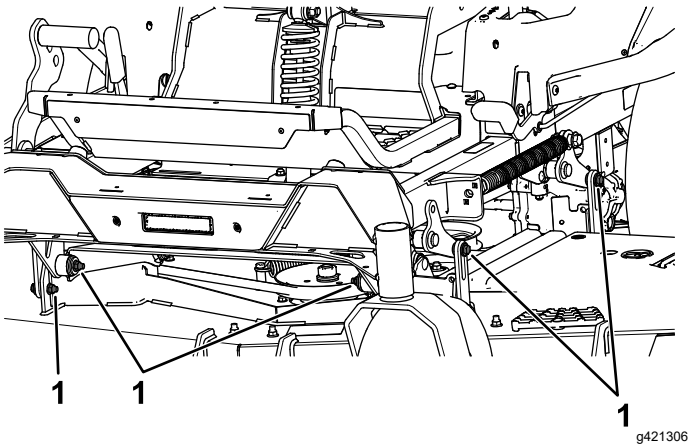

Figure 109

1. Remove the nuts and bolts here.

Replacing the Grass Deflector

⚠ WARNING

An uncovered discharge opening could allow the machine to throw objects toward you or bystanders, resulting in serious injury. Also, contact with the blade could occur.

Never operate the machine unless you install a mulch plate, discharge deflector, or grass collection system.

1. Remove the locknut, bolt, spring, and spacer holding the deflector to the pivot brackets (Figure 110).
2. Remove the damaged or worn grass deflector (Figure 110).

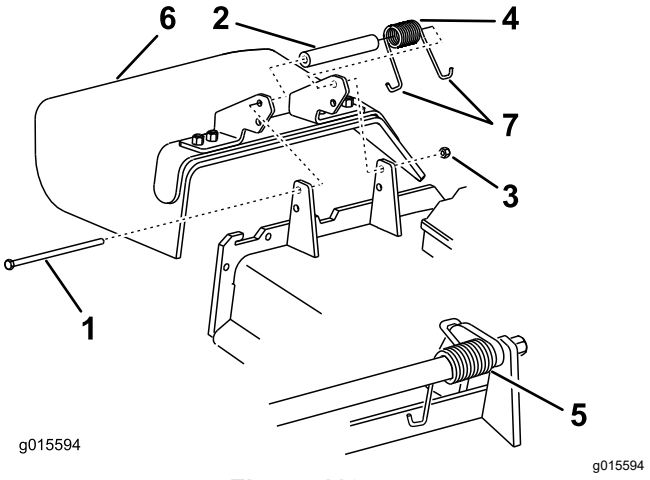

Figure 110

1. Bolt
2. Spacer
3. Locknut
4. Spring
5. Spring installed
6. Grass deflector
7. **J**-hook end of spring

3. Place the spacer and the spring onto grass deflector.
4. Place 1 **J**-hook end of the spring behind the deck edge.

   Note: Make sure that 1 **J**-hook end of the spring is installed behind the deck edge before installing the bolt as shown in Figure 110.
5. Install the bolt and the nut.
6. Place 1 **J**-hook end of the spring around the grass deflector (Figure 110).

   Important: **The grass deflector must be able to rotate. Lift the deflector up to the full open position and ensure that it rotates into the full down position.**

Cleaning

Cleaning under the Mower Deck

Service Interval: After each use

1. Park the machine on a level surface, disengage the blade-control switch (PTO), and engage the parking brake.
2. Shut off the engine, remove the key, and wait for all moving parts to stop before leaving the operating position.
3. Raise the mower deck to the TRANSPORT position.

Cleaning the Suspension System

Machines with MyRide™ Suspension System Only

Service Interval: Before each use or daily

Use compressed air to clean the suspension system.

Note: Do not clean the shock assemblies with pressurized water (Figure 111).

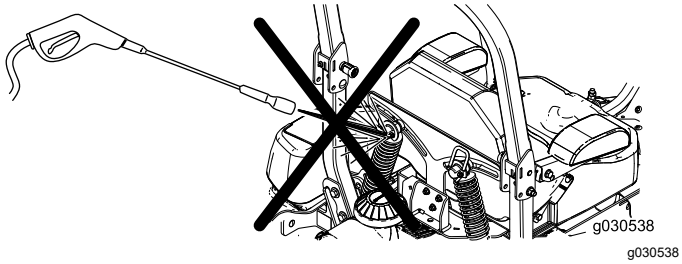

g030538

Figure 111

Disposing of Waste

Engine oil, batteries, hydraulic fluid, and engine coolant are pollutants to the environment. Dispose of these according to your state and local regulations.

Storage

Storage Safety

- Shut off the engine, remove the key, and wait for all moving parts to stop before you leave the operator's position. Allow the machine to cool before adjusting, servicing, cleaning, or storing it.
- Do not store the machine or fuel near flames or drain the fuel indoors or inside an enclosed trailer.
- Do not store the machine or fuel container where there is an open flame, spark, or pilot light, such as on a water heater or on other appliances.

Cleaning and Storage

1. Disengage the blade-control switch (PTO), and engage the parking brake.
2. Shut off the engine, remove the key, and wait for all moving parts to stop before leaving the operating position.
3. Remove grass clippings, dirt, and grime from the external parts of the entire machine, especially the engine and hydraulic system. Clean dirt and chaff from the outside of the engine cylinder head fins and blower housing.

   Important: **You can wash the machine with mild detergent and water. Do not pressure wash the machine. Avoid excessive use of water, especially near the control panel, engine, hydraulic pumps, and motors.**
4. Check the parking brake operation; refer to Adjusting the Parking Brake (page 61).
5. Service the air cleaner; refer to Servicing the Air Cleaner (page 41).
6. Grease the machine; refer to Lubrication (page 38).
7. Change the crankcase oil; refer to Engine Maintenance (page 40).
8. Check the tire pressure; refer to Checking the Tire Pressure (page 61).
9. Change the hydraulic filters; refer to Changing the Hydraulic Fluid and Filters (page 68).
10. Charge the battery; refer to Charging the Battery (page 58).
11. Scrape any heavy buildup of grass and dirt from the underside of the mower, then wash the mower with a garden hose.

    Note: Run the machine with the blade-control switch (PTO) engaged and the engine at high idle for 2 to 5 minutes after washing.
12. Check the condition of the blades; refer to Servicing the Cutting Blades (page 70).
13. Prepare the machine for storage when non-use occurs over 30 days. Prepare the machine for storage as follows:

    A. Add a petroleum-based stabilizer/conditioner to fuel in the tank. Follow mixing instructions from the stabilizer manufacturer. Do not use an alcohol-based stabilizer (ethanol or methanol).

    Note: A fuel stabilizer/conditioner is most effective when mixed with fresh fuel and used at all times.

    B. Run the engine to distribute conditioned fuel through the fuel system for 5 minutes.

    C. Shut off the engine, allow it to cool, and drain the fuel tank.

    D. Start the engine and run it until it stops.

    E. Dispose of fuel properly. Recycle the fuel according to local codes.

    Important: **Do not store fuel containing stabilizer/conditioner longer than the duration recommended by the fuel-stabilizer manufacturer.**
14. Remove and check the condition of the spark plug(s); refer to Servicing the Spark Plug(s) (page 45). With the spark plug(s) removed from the engine, pour 30 ml (2 tablespoons) of engine oil into the spark plug hole. Use the starter to crank the engine and distribute the oil inside the cylinder. Install the spark plug(s). Do not install the wire on the spark plug(s).
15. Check and tighten all bolts, nuts, and screws. Repair or replace any part that is damaged.
16. Paint all scratched or bare metal surfaces. Paint is available from your Authorized Service Dealer.
17. Store the machine in a clean, dry garage or storage area. Remove the key from the switch and keep it out of reach of children or other unauthorized users. Cover the machine to protect it and keep it clean.

Troubleshooting

Problem	Possible Cause	Corrective Action
The engine overheats.	1. The engine load is excessive. 2. The oil level in the crankcase is low. 3. The cooling fins and air passages under the engine-blower housing are plugged. 4. The air cleaner is dirty. 5. Dirt, water, or stale fuel is in the fuel system.	1. Reduce the ground speed. 2. Add oil to the crankcase. 3. Remove the obstruction from the cooling fins and air passages. 4. Clean or replace the air-cleaner element. 5. Contact an Authorized Service Dealer
The malfunction-indicator light (MIL) comes on.	1. The engine is too hot. 2. There is old fuel in the fuel tank. 3. The fuel-shutoff valve is not open completely. 4. The air cleaner is dirty. 5. The battery is not charged. 6. Incorrect fuel filters are being used or the fuel filters are dirty. 7. The connections to the sensors electronic-control unit (ECU) and fuel injectors are not secured properly. 8. There is low voltage from the battery. 9. A fuse is blown.	1. Shut off the engine and let it cool. 2. Use new fuel. 3. Open the fuel-shutoff valve. 4. Make sure that the air cleaner and precleaner are clean. Replace if necessary. 5. Charge or replace the battery. 6. Contact an Authorized Service Dealer. 7. Contact an Authorized Service Dealer. 8. Ensure that you are using a good 12 V battery and that it is fully charged. 9. Check and replace any blown fuses.
The starter does not crank.	1. The blade-control switch is engaged. 2. The parking brake is disengaged. 3. The motion-control levers are not in the NEUTRAL-LOCK position. 4. You are not sitting in the operator's seat. 5. The battery is dead. 6. The electrical connections are corroded or loose. 7. A fuse is blown. 8. A relay or switch is damaged.	1. Disengage the blade-control switch. 2. Engage the parking brake. 3. Move the motion-control levers outward to the NEUTRAL-LOCK position. 4. Sit on the operator's seat. 5. Charge the battery. 6. Check the electrical connections for good contact. 7. Replace the fuse. 8. Contact an Authorized Service Dealer.

Problem	Possible Cause	Corrective Action
The engine does not start, starts hard, or fails to keep running.	1. The fuel tank is empty. 2. The fuel-shutoff valve is closed. 3. The oil level in the crankcase is low. 4. The throttle is not in the correct position. 5. There is dirt in the fuel filter. 6. There is dirt, water, or stale fuel is in the fuel system. 7. The air cleaner is dirty. 8. The seat switch is not functioning properly. 9. The electrical connections are corroded, loose, or damaged. 10. The relay or switch is worn or damaged. 11. The spark plug is fouled or improperly gapped. 12. The spark-plug wire is not connected.	1. Fill the fuel tank. 2. Open the fuel-shutoff valve. 3. Add oil to the crankcase. 4. Be sure that the throttle control is midway between the SLOW and FAST positions. 5. Replace the fuel filter. 6. Contact an Authorized Service Dealer. 7. Clean or replace the air-cleaner element. 8. Check the seat-switch indicator. Replace the seat if necessary. 9. Check the electrical connections for good contact. Clean the connector terminals thoroughly with electrical-contact cleaner, apply dielectric grease, and make the appropriate connections. 10. Contact an Authorized Service Dealer. 11. Adjust or replace the spark plug. 12. Check the spark-plug wire connection.
The engine loses power.	1. The engine load is excessive. 2. The air cleaner is dirty. 3. The oil level in the crankcase is low. 4. The cooling fins and the air passages above the engine are plugged. 5. The vent hole in the fuel cap is plugged. 6. There is dirt in the fuel filter. 7. There is dirt, water, or stale fuel in the fuel system.	1. Reduce the ground speed. 2. Clean the air-cleaner element. 3. Add oil to the crankcase. 4. Remove the obstruction from the cooling fins and the air passages. 5. Clean or replace the fuel cap. 6. Replace the fuel filter. 7. Contact an Authorized Service Dealer.
The machine pulls to the left or right (with the motion-control levers fully forward).	1. The tracking needs adjustment 2. The tire pressure in the drive tires is not correct.	1. Adjust the tracking. 2. Adjust the tire pressure in the drive tires.
The machine does not drive.	1. The bypass valves are not closed tight. 2. The pump belt is worn, loose, or broken. 3. The pump belt is off a pulley. 4. The idler spring is broken or missing. 5. The hydraulic fluid level is low or too hot.	1. Tighten the bypass valves. 2. Change the belt. 3. Change the belt. 4. Replace the spring. 5. Add hydraulic fluid to the reservoirs or let it cool down.
The machine vibrates abnormally.	1. The cutting blade(s) is/are bent or unbalanced. 2. The blade mounting bolt is loose. 3. The engine mounting bolts are loose. 4. The engine pulley, idler pulley, or blade pulley is loose. 5. The engine pulley is damaged. 6. The blade spindle is bent. 7. The motor mount is loose or worn.	1. Install new cutting blade(s). 2. Tighten the blade mounting bolt. 3. Tighten the engine mounting bolts. 4. Tighten the appropriate pulley. 5. Contact an Authorized Service Dealer. 6. Contact an Authorized Service Dealer. 7. Contact an Authorized Service Dealer.

Problem	Possible Cause	Corrective Action
The cutting height is uneven.	1. The blade(s) is not sharp. 2. A cutting blade(s) is/are bent. 3. The mower is not level. 4. An anti-scalp roller (if applicable) is not set correctly. 5. The underside of the mower deck is dirty. 6. The tire pressure is incorrect. 7. A blade spindle is bent.	1. Sharpen the blade(s). 2. Install a new cutting blade(s). 3. Level the mower from side-to-side and front-to-rear. 4. Adjust the anti-scalp wheel height. 5. Clean the underside of the mower deck. 6. Adjust the tire pressure. 7. Contact an Authorized Service Dealer.
The blades do not rotate.	1. The drive belt is worn, loose or broken. 2. The drive belt is off of the pulley. 3. The power-takeoff (PTO) switch or PTO clutch is faulty. 4. The mower belt is worn, loose, or broken.	1. Install a new drive belt. 2. Install the drive belt and check the adjusting shafts and belt guides for the correct position. 3. Contact an Authorized Service Dealer. 4. Install a new mower belt.
The clutch does not engage.	1. The fuse is blown. 2. There is low voltage supply at the clutch. 3. The coil is damaged. 4. There is inadequate current supply. 5. The rotor/armature air gap is too large.	1. Replace the fuse. Check the coil resistance, battery charge, charging system, and wiring connections, and replace components if necessary. 2. Check the coil resistance, battery charge, charging system, and wiring connections and replace parts if necessary. 3. Replace the clutch. 4. Repair or replace the clutch lead wire or electrical system. Clean the connector contacts. 5. Remove the shim or replace the clutch.

Schematics

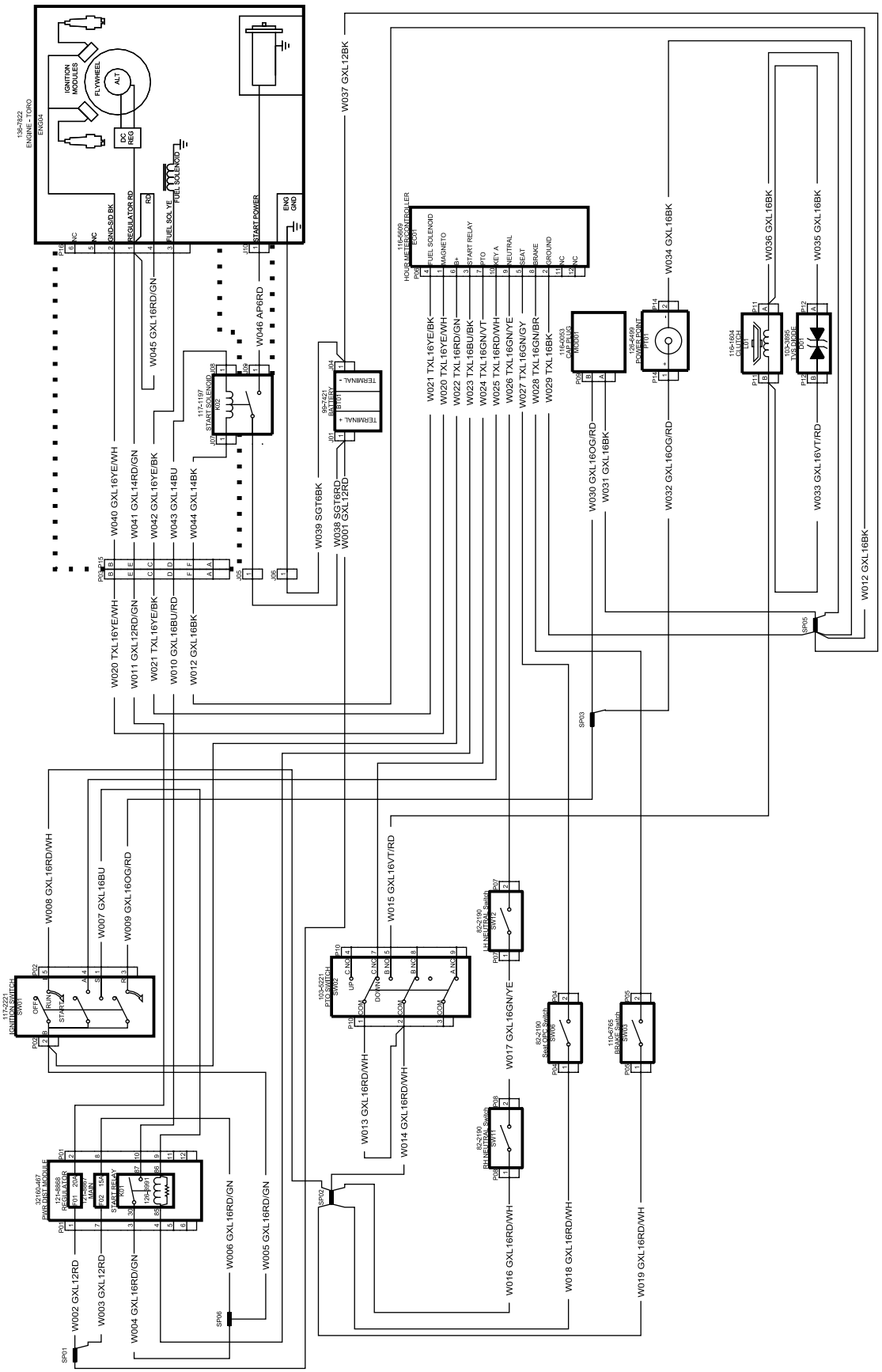

g412076

Wire Diagram—Toro Engines (Rev. G)

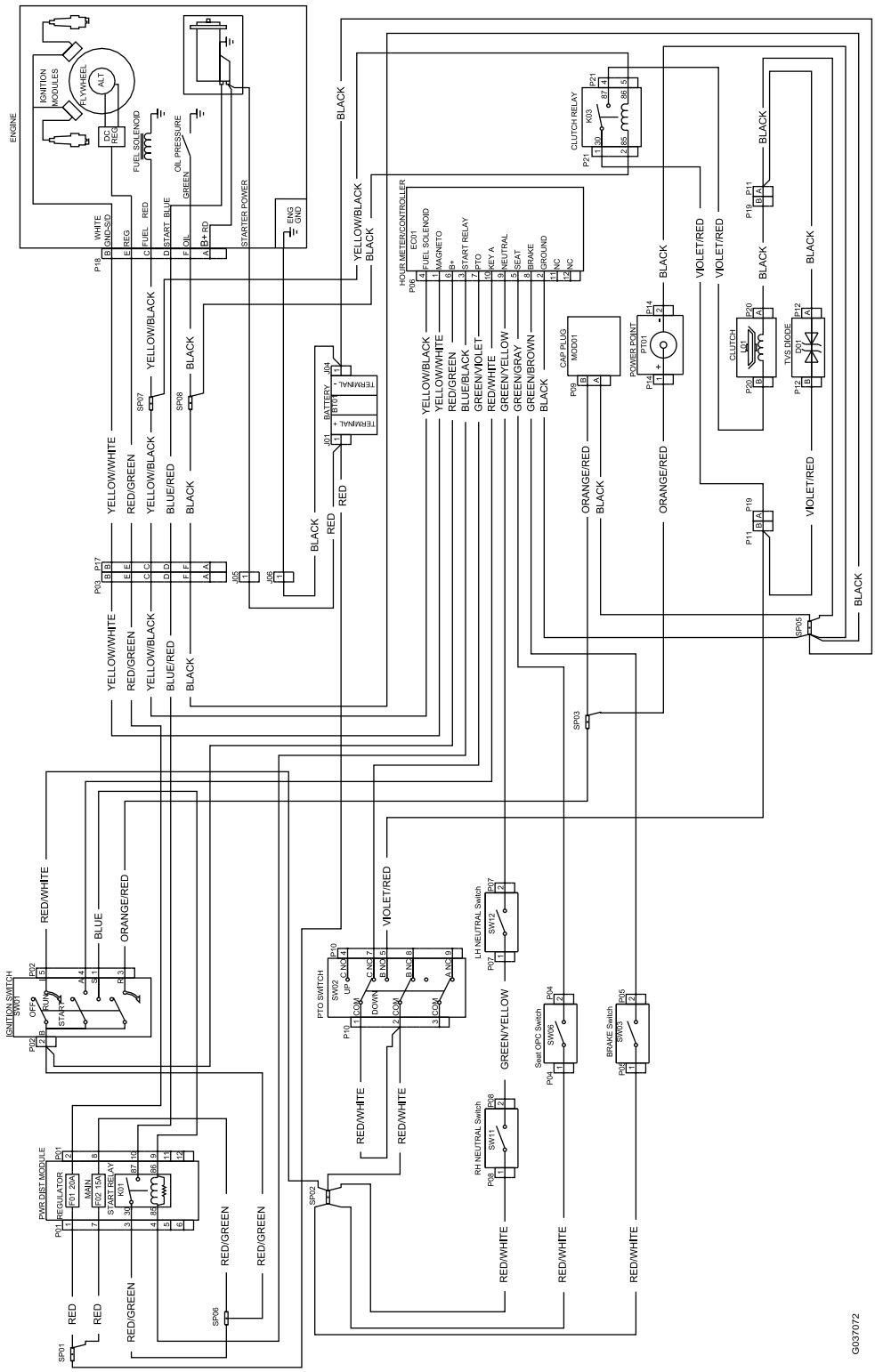

g037072

Wire Diagram—Kawasaki Engines (Rev. A)

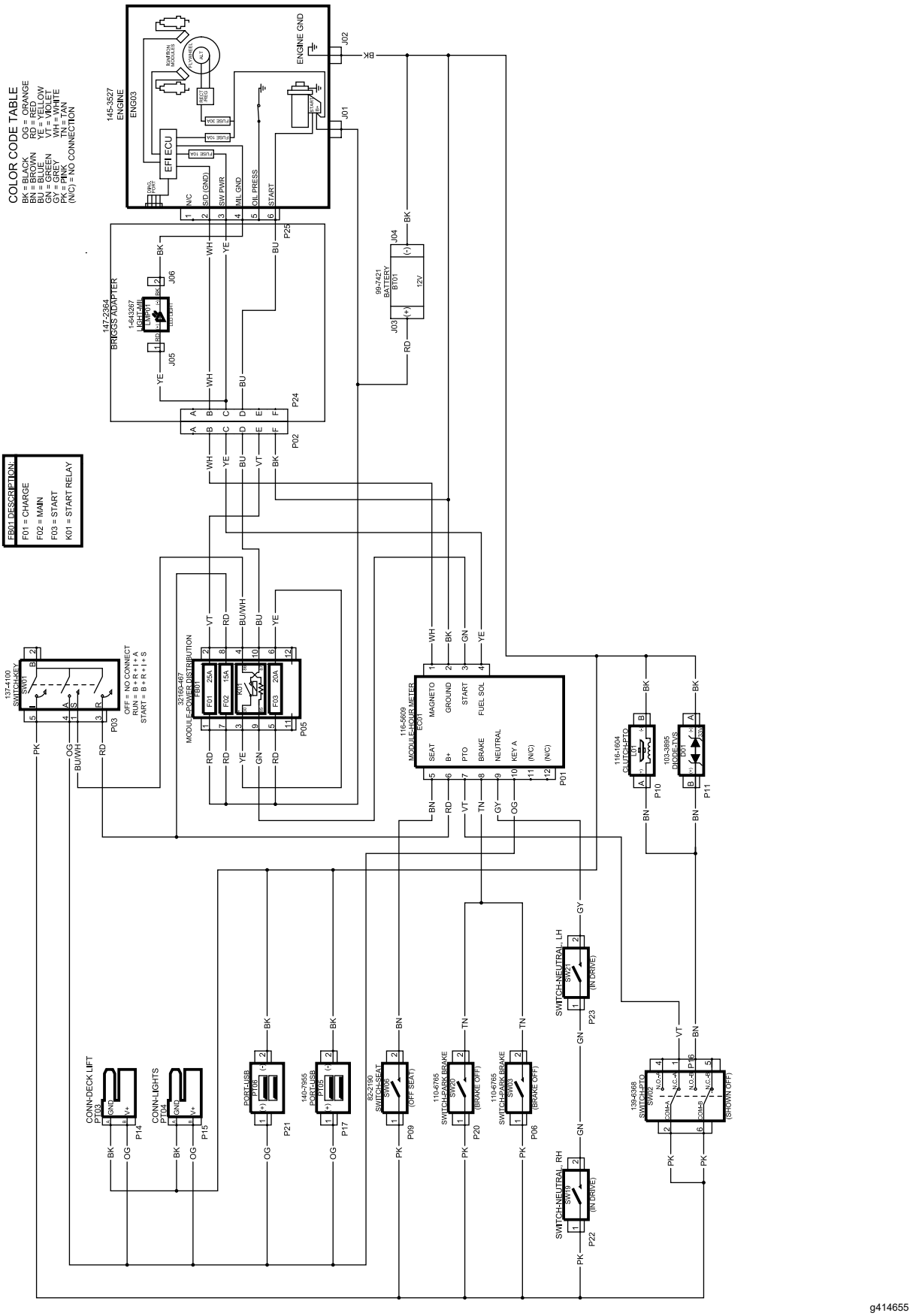

g414655

Wire Diagram—Briggs and Stratton Engines (Rev. A)

California Proposition 65 Warning Information

What is this warning?

You may see a product for sale that has a warning label like the following:



WARNING: Cancer and Reproductive Harm—www.p65Warnings.ca.gov.

What is Prop 65?

Prop 65 applies to any company operating in California, selling products in California, or manufacturing products that may be sold in or brought into California. It mandates that the Governor of California maintain and publish a list of chemicals known to cause cancer, birth defects, and/or other reproductive harm. The list, which is updated annually, includes hundreds of chemicals found in many everyday items. The purpose of Prop 65 is to inform the public about exposure to these chemicals.

Prop 65 does not ban the sale of products containing these chemicals but instead requires warnings on any product, product packaging, or literature with the product. Moreover, a Prop 65 warning does not mean that a product is in violation of any product safety standards or requirements. In fact, the California government has clarified that a Prop 65 warning "is not the same as a regulatory decision that a product is 'safe' or 'unsafe.'" Many of these chemicals have been used in everyday products for years without documented harm. For more information, go to https://oag.ca.gov/prop65/faqs-view-all.

A Prop 65 warning means that a company has either (1) evaluated the exposure and has concluded that it exceeds the "no significant risk level"; or (2) has chosen to provide a warning based on its understanding about the presence of a listed chemical without attempting to evaluate the exposure.

Does this law apply everywhere?

Prop 65 warnings are required under California law only. These warnings are seen throughout California in a wide range of settings, including but not limited to restaurants, grocery stores, hotels, schools, and hospitals, and on a wide variety of products. Additionally, some online and mail order retailers provide Prop 65 warnings on their websites or in catalogs.

How do the California warnings compare to federal limits?

Prop 65 standards are often more stringent than federal and international standards. There are various substances that require a Prop 65 warning at levels that are far lower than federal action limits. For example, the Prop 65 standard for warnings for lead is 0.5 µg/day, which is well below the federal and international standards.

Why don't all similar products carry the warning?

- Products sold in California require Prop 65 labelling while similar products sold elsewhere do not.
- A company involved in a Prop 65 lawsuit reaching a settlement may be required to use Prop 65 warnings for its products, but other companies making similar products may have no such requirement.
- The enforcement of Prop 65 is inconsistent.
- Companies may elect not to provide warnings because they conclude that they are not required to do so under Prop 65; a lack of warnings for a product does not mean that the product is free of listed chemicals at similar levels.

Why does Toro include this warning?

Toro has chosen to provide consumers with as much information as possible so that they can make informed decisions about the products they buy and use. Toro provides warnings in certain cases based on its knowledge of the presence of one or more listed chemicals without evaluating the level of exposure, as not all the listed chemicals provide exposure limit requirements. While the exposure from Toro products may be negligible or well within the "no significant risk" range, out of an abundance of caution, Toro has elected to provide the Prop 65 warnings. Moreover, if Toro does not provide these warnings, it could be sued by the State of California or by private parties seeking to enforce Prop 65 and subject to substantial penalties.