Operator's Manual

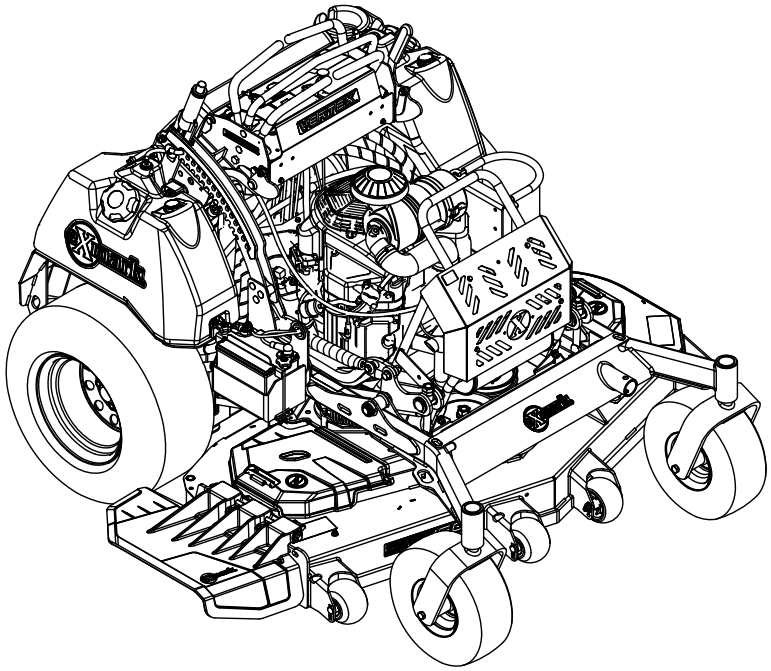

VERTEX®

X- AND S-SERIES

For Serial Nos.
417,930,746 & Higher

Part No. 4507-434 Rev. B

⚠ WARNING

CALIFORNIA
Proposition 65 Warning

The engine exhaust from this product contains chemicals known to the State of California to cause cancer, birth defects, or other reproductive harm.

Battery posts, terminals, and related accessories contain lead and lead compounds, chemicals known to the State of California to cause cancer and reproductive harm. Wash hands after handling.

Use of this product may cause exposure to chemicals known to the State of California to cause cancer, birth defects, or other reproductive harm.

Important: It is a violation of California Public Resource Code Section 4442 or 4443 to use or operate the engine on any forest-covered, brush-covered, or grass-covered land unless the engine is equipped with a spark arrester, as defined in Section 4442, maintained in effective working order or the engine is constructed, equipped, and maintained for the prevention of fire.

To acquire a spark arrester for your unit, see your Engine Service Dealer.

For all models that do not have Exmark engines, please refer to the engine manufacturer's information included with the machine.

For models with Exmark engines, refer to this manual for information.

The gross or net horsepower (or torque) of this engine was laboratory rated by the engine manufacturer in accordance with the Society of Automotive Engineers (SAE) J1940 or J2723. As configured to meet safety, emission, and operating requirements, the actual engine horsepower (or torque) on this class of mower will be significantly lower.

©2025 Exmark Mfg. Co., Inc.
415 Industrial Row
Beatrice, NE 68310

Contact us at www.Exmark.com.
Printed in the USA
All Rights Reserved

Introduction

CONGRATULATIONS on the purchase of your Exmark Mower. This product has been carefully designed and manufactured to give you a maximum amount of dependability and years of trouble-free operation.

This rotary-blade, stand-on lawn mower is intended to be used by professional, hired operators. It is designed primarily for cutting grass on well-maintained lawns on residential or commercial properties. Using this product for purposes other than its intended use could prove dangerous to you and bystanders.

This manual contains operating, maintenance, adjustment, and safety instructions for your Exmark mower.

BEFORE OPERATING YOUR MOWER, CAREFULLY READ THIS MANUAL IN ITS ENTIRETY.

By following the operating, maintenance, and safety instructions, you will prolong the life of your mower, maintain its maximum efficiency, and promote safe operation.

To maximize safety, performance, and proper operation of this machine, it is essential that all operators carefully read and fully understand the contents of the Operator's manual provided with the product. Failure to comply with the operating instructions or receive proper training may result in injury. Go to https://www.Exmark.com for additional safe operation information, such as safety tips, training materials, and Operator's manuals.

If additional information is needed, or should you require trained mechanic service, contact your authorized Exmark equipment dealer or distributor.

All Exmark equipment dealers and distributors are kept informed of the latest methods of servicing and are equipped to provide prompt and efficient service in the field or at their service stations. They carry ample stock of service parts or can secure them promptly for you from the factory.

All Exmark parts are thoroughly tested and inspected before leaving the factory, however, attention is required on your part if you are to obtain the fullest measure of satisfaction and performance.

Whenever you need service, genuine Exmark parts, or additional information, contact an Authorized Service Dealer or Exmark Customer Service and have the model and serial numbers of your product ready.

Figure 1 identifies the location of the model and serial numbers on the product. Write the numbers in the space provided.

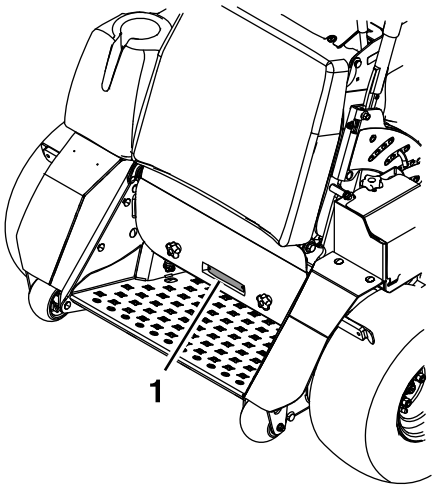

g387524

Figure 1

1. Model and serial number location

Model No. _____

Serial No. _____

For complete warranty details, see https://www.Exmark.com. You may also call us 402-223-6375 to request a written copy of the product's warranty.

Contents

Introduction 3
Safety 5
Safety Alert Symbol 5
General Safety 5
Safety and Instructional Decals 6
Specifications 15
Systems 15
Dimensions 17
Torque Requirements 18
Product Overview 19
Operation 19
Controls 19
Before Operation 22
Operating Safety 23
During Operation Safety 23
After Operation 29
Transporting 29
Maintenance 31
Maintenance Safety 31
Recommended Maintenance Schedule(s) 32
Periodic Maintenance 33
Engine Maintenance 33
Engine Safety 33
Check Engine Oil Level 34
Check Mower Blades 36
Check Safety Interlock System 38
Check for Loose Hardware 41
Service Air Cleaner 41
Change Engine Oil 41
Check Hydraulic Oil Level 42
Check Tire Pressures 42
Check Condition Of Belts 42
Lubricate Grease Fittings 43
Check Spark Plugs 44
Change Hydraulic System Filter and Fluid (X-Series) 44
Change Hydraulic System Filter and Fluid (S-Series) 46
Wheel Hub Nut Specification–S-Series Only 47
Check Spark Arrester (if equipped) 47
Thread Locking Adhesives 48
General Purpose Grease (Or Food-Grade Anti-seize) 48
Copper-Based Anti-seize 48
Dielectric Grease 48
Adjustments 49
Deck Leveling 49
Pump Drive Belt Tension 50
Mower Deck Drive Belt Tension 50
Park Brake Adjustment–S-Series Only 50
Motion Control Tracking Adjustment 50
Motion Control Neutral Lock Adjustment 51
Motion Control Lever–Drive Comfort Adjustment 51
Cleaning 53
Cleaning and Storing Safety 53
Clean Debris From Machine 53
Clean Engine and Exhaust System Area 53
Remove Engine Shroud Access Panels and Clean Cooling Fins 53
Clean Grass Build-Up Under Deck 53
Waste Disposal 54
Troubleshooting 55
Schematics 58
California Proposition 65 Warning Information 63

Safety

Safety Alert Symbol

This Safety Alert Symbol (Figure 2) is used both in this manual and on the machine to identify important safety messages which must be followed to avoid accidents.

This symbol means: **ATTENTION! BECOME ALERT! YOUR SAFETY IS INVOLVED!**



g000502

Figure 2
Safety Alert Symbol

The safety alert symbol appears above information which alerts you to unsafe actions or situations and will be followed by the word **DANGER**, **WARNING**, or **CAUTION**.

DANGER: Indicates an imminently hazardous situation which, if not avoided, **Will** result in death or serious injury.

WARNING: Indicates a potentially hazardous situation which, if not avoided, **Could** result in death or serious injury.

CAUTION: Indicates a potentially hazardous situation which, if not avoided, **May** result in minor or moderate injury.

This manual uses two other words to highlight information. **Important** calls attention to special mechanical information and **Note** emphasizes general information worthy of special attention.

General Safety

This machine is capable of amputating hands and feet and of throwing objects. Always follow all safety instructions to avoid serious personal injury and death.

- Read, understand, and follow all instructions and warnings in the Operator's Manual and on the machine, engine, and attachments. All operators and mechanics should be trained. If the operator(s) or mechanic(s) can not read this manual, it is the owner's responsibility to explain this material to them; other languages may be available on our website.
- Only allow trained, responsible, and physically capable operators that are familiar with the safe operation, operator controls, and safety signs and instructions to operate the machine. Never let children or untrained people operate or service the equipment. Local regulations may restrict the age of the operator.
- Do Not operate the machine near drop-offs, ditches, embankments, water, or other hazards.
- Keep bystanders and children out of the operating area.
- Do Not put your hands or feet near moving parts.
- Do Not operate the machine without all safety shields, guards, switches, and other devices in place and in proper working condition.
- Park machine on level ground, disengage drives, set parking brake, stop engine, remove key, or disconnect spark plug wire. Wait for all moving parts to stop before leaving the operator's position. Allow the machine to cool before servicing, adjusting, fueling, cleaning, or storing.

Safety and Instructional Decals

- Keep all safety signs legible. Remove all grease, dirt and debris from safety signs and instructional labels.
- Replace all worn, damaged, or missing safety signs.
- When replacement components are installed, be sure that current safety signs are affixed to the replaced components.
- If an attachment or accessory has been installed, make sure current safety signs are visible.
- New safety signs may be obtained from your authorized Exmark equipment dealer or distributor or from Exmark Mfg. Co. Inc.
- Safety signs may be affixed by peeling off the backing to expose the adhesive surface. Apply only to a clean, dry surface. Smooth to remove any air bubbles.
- Familiarize yourself with the following safety signs and instruction labels. They are critical to the safe operation of your Exmark commercial mower.

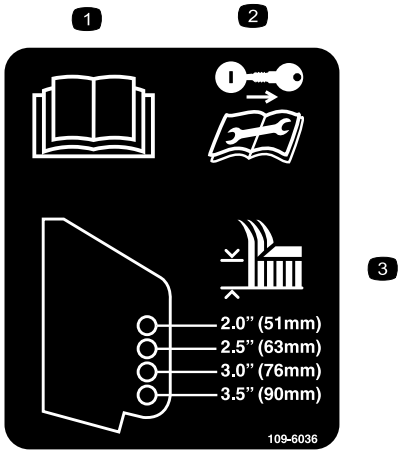

decal109-6036

109-6036

1. Read the Operator's manual
2. Remove the ignition key and read the instructions before servicing or performing maintenance.
3. Height of cut

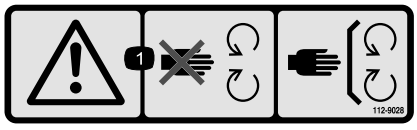

decal112-9028

112-9028

1. Warning—stay away from moving parts; keep all guards in place.



decal115-4212

115-4212

1. Hydraulic oil level
2. Read the *Operator's Manual*.
3. Warning—do not touch the hot surface.

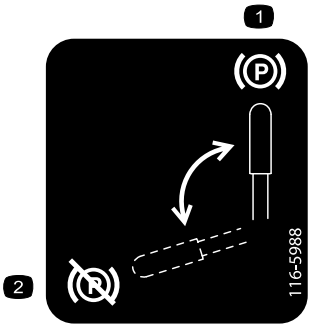

decal116-5988

116-5988

1. Parking brake—engaged
2. Parking brake—disengaged

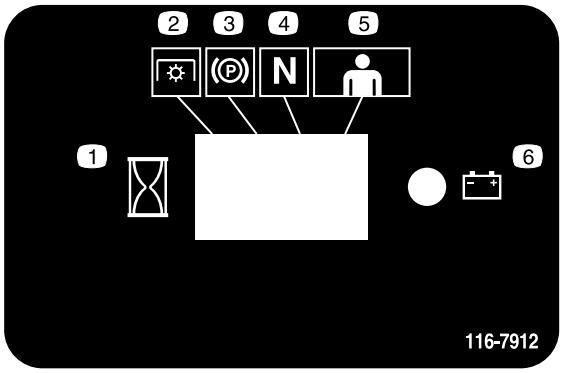

decal116-7912

116-7912

1. Interval
2. Power Take-off (PTO)
3. Parking brake
4. Neutral
5. Operator presence control
6. Battery

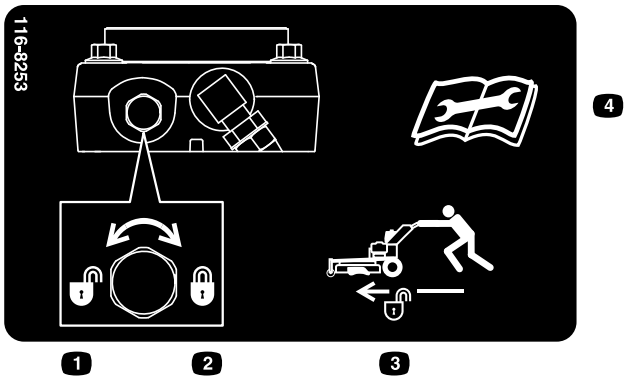

decal116-8253

116-8253

1. Rotate counterclockwise to release.
2. Rotate clockwise to lock.
3. Unlock to push machine.
4. Read the instructions before servicing or performing maintenance.

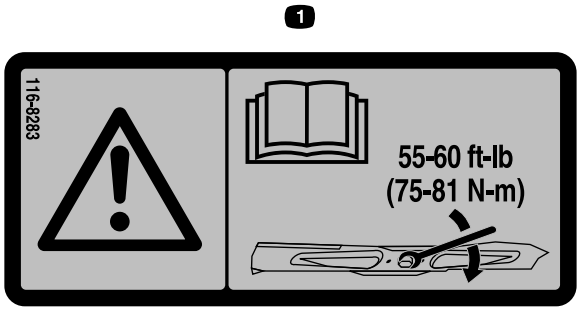

decal116-8283

116-8283

1. Warning—read the Operator's Manual for instructions on torquing the blade bolt/nut to 55-60 ft-lb (75-81 N-m).

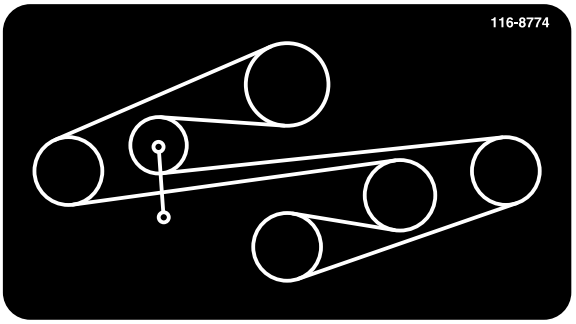

decal116-8774

116-8774

All S-Series Models and
52 Inch Deck X-Series Models

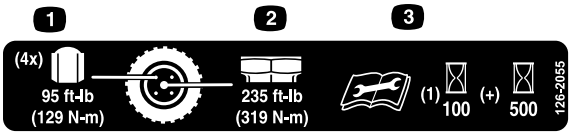

decal126-2055

126-2055

S-Series Models Only

1. Wheel lug nut—torque to 95 ft-lb (129 N-m).
2. Wheel hub nut—torque to 235 ft-lb (319 N-m).
3. Read and understand the Operator's manual before performing maintenance; check torque after first 100 hours and every 500 hours thereafter.



decal133-8062

133-8062

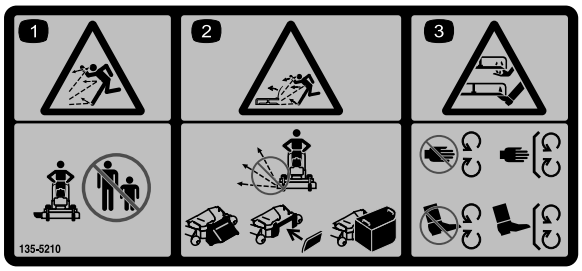

decal135-5210

135-5210

1. Thrown objects hazard - keep bystanders away.
2. Thrown objects hazard, mower - do not operate without the deflector, discharge cover or grass collection system in place.
3. Cutting/dismemberment of hand or foot - stay away from moving parts; keep all guards and shields in place.

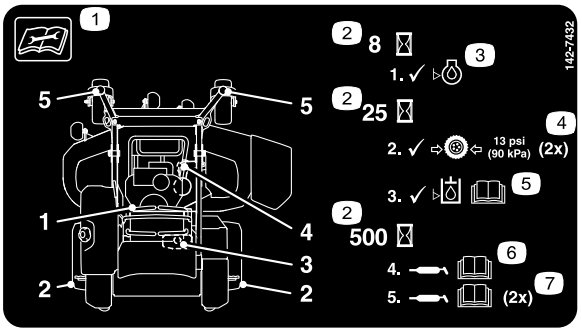

decal142-7432

142-7432

S-Series Models Only

1. Read the instructions before servicing or performing maintenance
2. Time interval
3. Check the engine oil level
4. Check tire pressure (2 locations)
5. Check hydraulic oil level; refer to the Operator's manual or further instructions
6. Grease the idler pivot; refer to the Operator's Manual for further instructions
7. Grease the caster pivots; refer to the Operator's Manual for further instructions (2 locations)

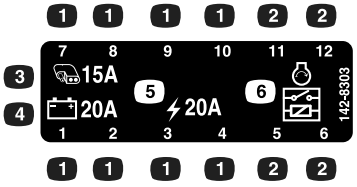

decal142-8303

142-8303

All S-Series Models and X-Series Non-EFI Models Only

1. Fuse location
2. Relay location
3. Auxiliary, 15A
4. Regulator, 20A
5. Main, 20A
6. Start relay

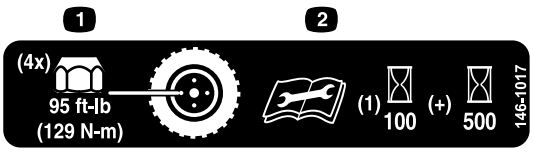

decal146-1017

146-1017

X-Series Models Only

1. Wheel lug nut—torque to 95 ft-lb (129 N-m) (4x).
2. Read and understand the Operator's manual before performing maintenance; check torque after first 100 hours and every 500 hours thereafter.

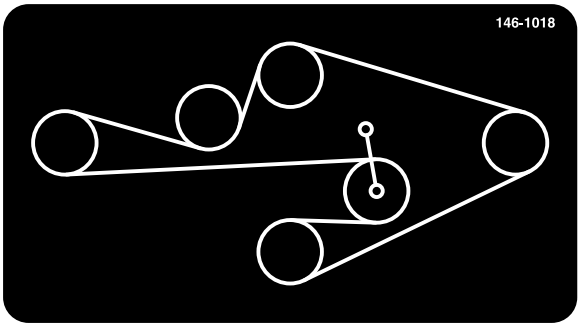

decal146-1018

146-1018

60 and 72 Inch Decks
X-Series Models Only

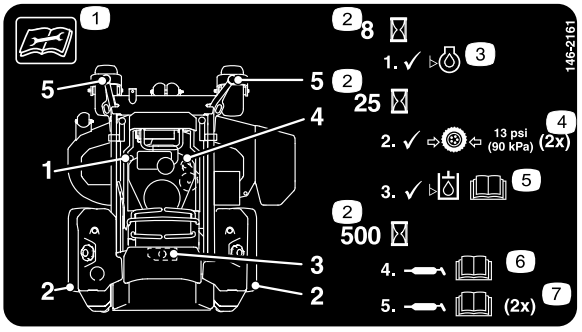

decal146-2161

146-2161

X-Series Models Only

1. Read the instructions before servicing or performing maintenance
2. Time interval
3. Check the engine oil level
4. Check tire pressure (2 locations)
5. Check hydraulic oil level; refer to the Operator's manual or further instructions
6. Grease the idler pivot; refer to the Operator's Manual for further instructions
7. Grease the caster pivots; refer to the Operator's Manual for further instructions (2 locations)

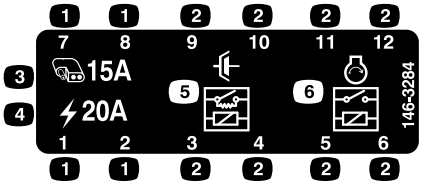

decal146-3284

146-3284

X-Series EFI Models Only

1. Fuse location
2. Relay location
3. Auxiliary, 15A
4. Main, 20A
5. Clutch saver relay
6. Start relay



g224590

Lock Symbol

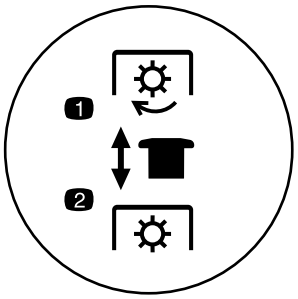

decalptoswitch

PTO Switch Symbols

S-Series Models Only

1. PTO–engage
2. PTO–disengage

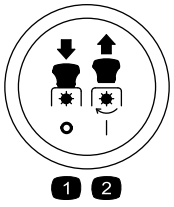

decalptosymbols

PTO Switch Symbols

X-Series Models Only

1. PTO–disengage
2. PTO–engage

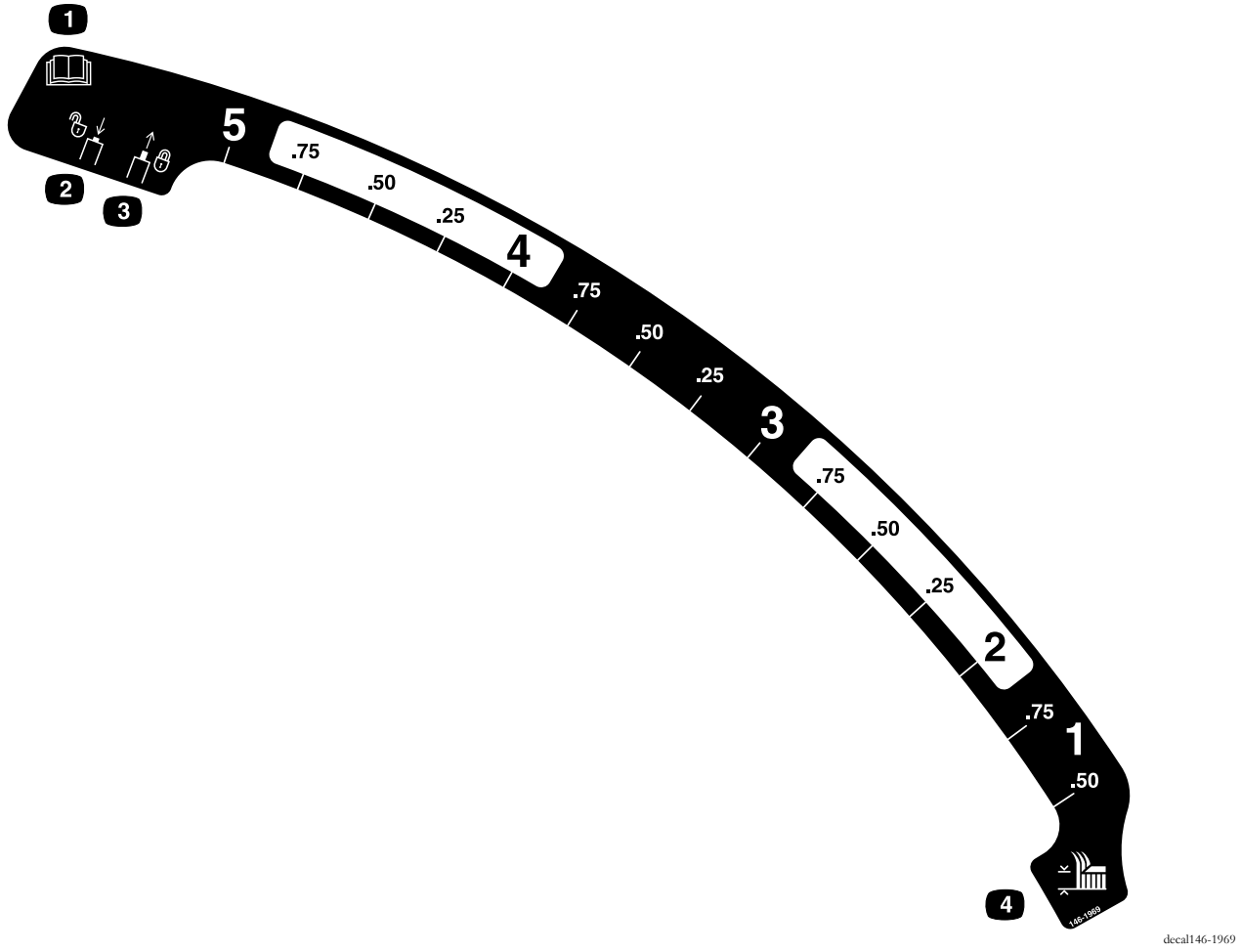

decal146-1969

146-1969

X-Series Models Only

1. Read the Operator's manual.
2. Push button down to unlock
3. Release button to lock
4. Height of cut

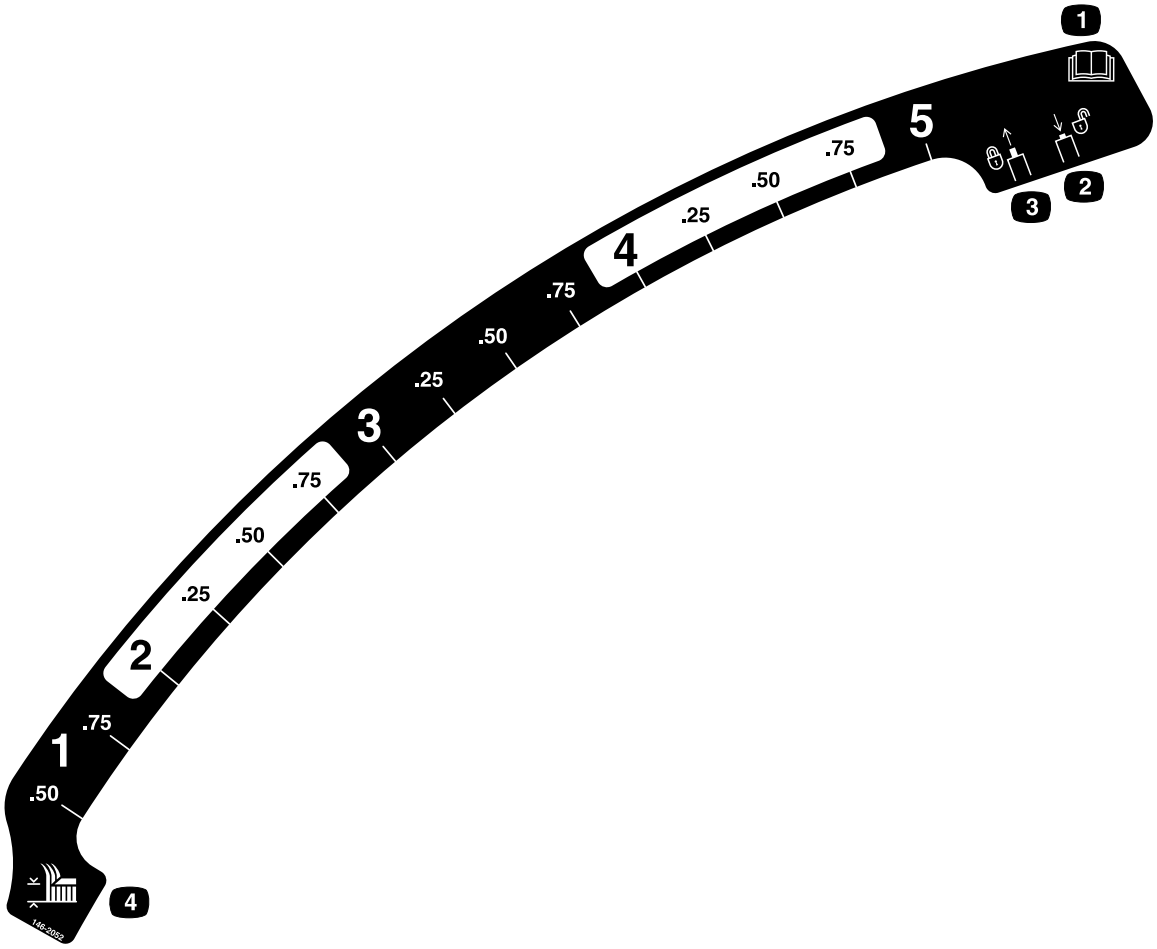

decal146-2052

146-2052

X-Series Models Only

1. Read the Operator's manual.
2. Push button down to unlock
3. Release button to lock
4. Height of cut

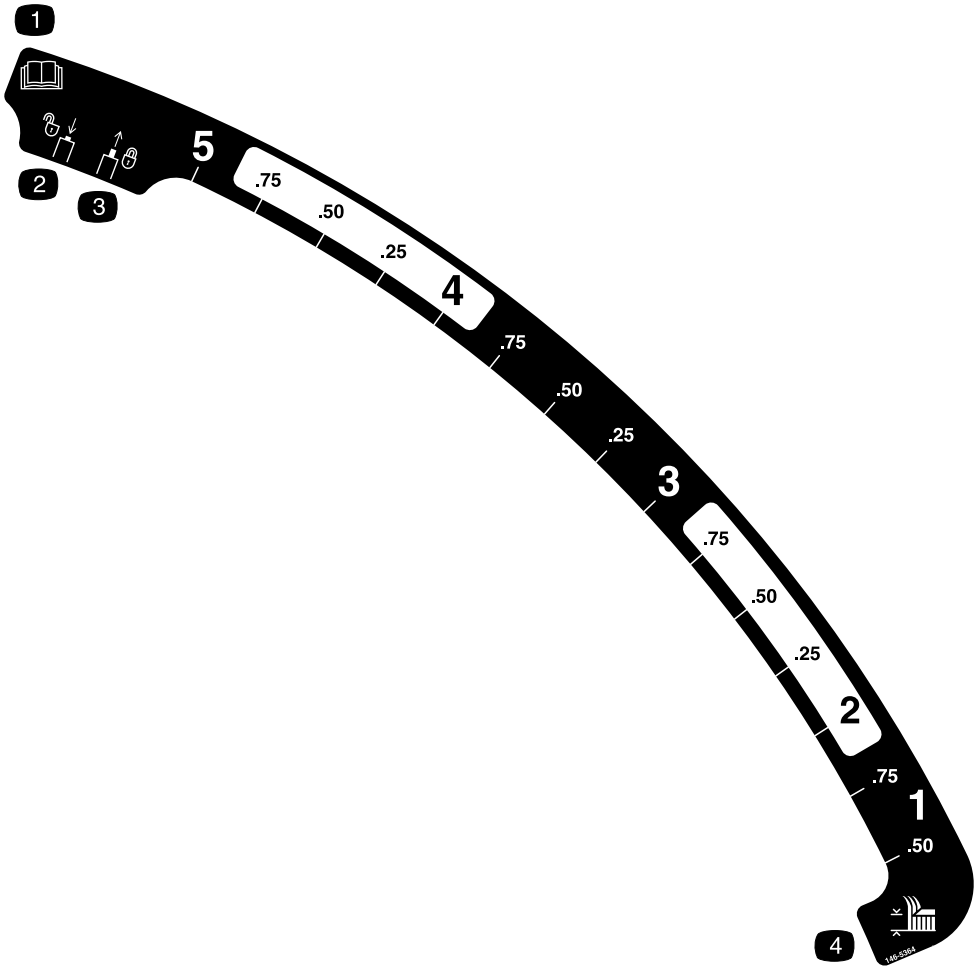

decal146-5364

146-5364

S-Series Models Only

1. Read the Operator's manual.
2. Push button down to unlock
3. Release button to lock
4. Height of cut

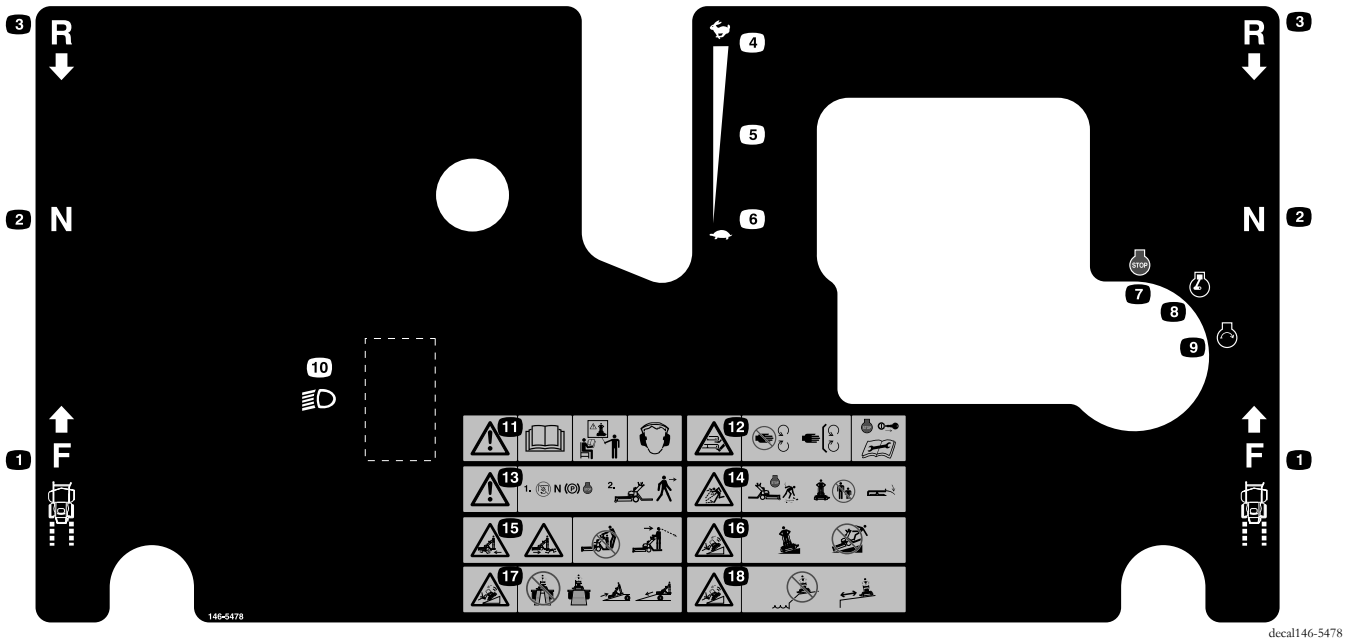

146-5478

Non-EFI Models Only

1. Forward
2. Neutral
3. Reverse
4. Throttle-fast
5. Continuous variable setting
6. Throttle-slow
7. Engine–off
8. Engine–on
9. Engine–start
10. Optional light accessory
11. Warning—Read the Operator's Manual. Do Not operate this machine unless you are trained. Wear hearing protection.
12. Warning—Stay away from moving parts; keep all guards in place. Stop engine and remove key before adjusting, servicing, or cleaning.
13. Warning—Disengage PTO, move drive levers to neutral position, engage parking brake, and stop engine before leaving the operator's position
14. Thrown object hazard—Pick up objects that could be thrown by mower. Keep bystanders away. Keep deflector in place.
15. Crushing/dismemberment hazard of bystanders—Do Not carry passengers, look forward and down when operating the machine, look behind and down when reversing.
16. Tipping hazard—Mow across slopes not up and down. Do Not mow wet slopes–use extreme caution when operating on slopes.
17. Tipping hazard—Do Not use dual ramps when loading onto a trailer; use one ramp wide enough for the machine; back up the ramp when loading the machine and drive forward off the ramp when unloading.
18. Tipping hazard—Do Not use the machine near drop-offs or on slopes; stay at least two widths of the machine away from drop-offs.

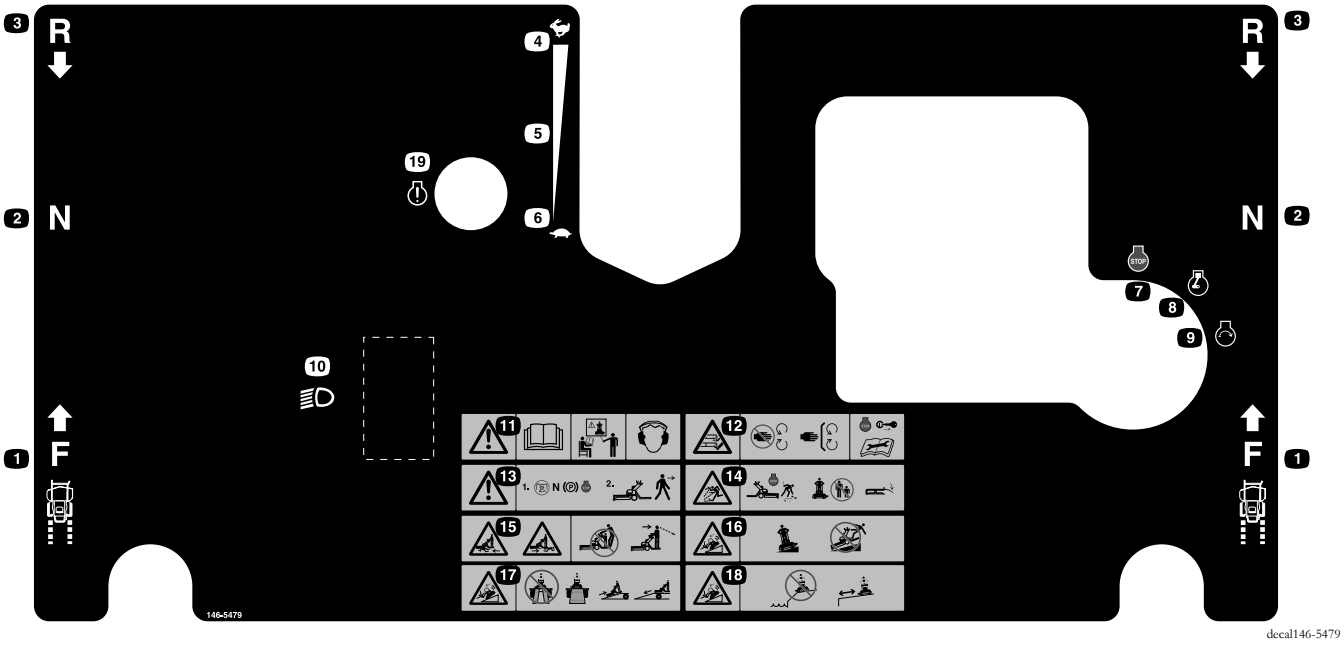

146-5479

EFI Models Only

1. Forward
2. Neutral
3. Reverse
4. Throttle-fast
5. Continuous variable setting
6. Throttle-slow
7. Engine–off
8. Engine–on
9. Engine–start
10. Optional light accessory
11. Warning—Read the Operator's Manual. Do Not operate this machine unless you are trained. Wear hearing protection.
12. Warning—Stay away from moving parts; keep all guards in place. Stop engine and remove key before adjusting, servicing, or cleaning.
13. Warning—Disengage PTO, move drive levers to neutral position, engage parking brake, and stop engine before leaving the operator's position
14. Thrown object hazard—Pick up objects that could be thrown by mower. Keep bystanders away. Keep deflector in place.
15. Crushing/dismemberment hazard of bystanders—Do Not carry passengers, look forward and down when operating the machine, look behind and down when reversing.
16. Tipping hazard—Mow across slopes not up and down. Do Not mow wet slopes–use extreme caution when operating on slopes.
17. Tipping hazard—Do Not use dual ramps when loading onto a trailer; use one ramp wide enough for the machine; back up the ramp when loading the machine and drive forward off the ramp when unloading.
18. Tipping hazard—Do Not use the machine near drop-offs or on slopes; stay at least two widths of the machine away from drop-offs.
19. Check engine

Specifications

Systems

Engine

- Engine Specifications: See your Engine Owner's Manual
- Engine Oil Type: Exmark 4-Cycle Premium Engine Oil
- RPM: Full Speed:
  - X-Series: 3600±50 RPM (No Load)
  - S-Series: 3700+75/-0 RPM (No Load)

Fuel System

- Capacity:
  - X-Series: 14.0 gal. (53 L)
  - S-Series: 8.0 gal. (30 L)
- Fuel Recommendations:
  - For best results, use only clean, fresh, unleaded gasoline with an octane rating of 87 or higher ((R+M)/2 rating method).
  - Oxygenated fuel with up to 10% ethanol or 15% MTBE by volume is acceptable.
  - **Do Not** use ethanol blends of gasoline (such as E15 or E85) with more than 10% ethanol by volume. Performance problems and/or engine damage may result which may not be covered under warranty.
  - **Do Not** use gasoline containing methanol.
  - **Do Not** store fuel either in the fuel tank or fuel containers over the winter unless a fuel stabilizer is used.
  - **Do Not** add oil to gasoline.
- Fuel Filter: Replaceable In-line

Electrical System

- Charging System: Flywheel Alternator
- Charging Capacity:
  - Kawasaki:
    - ◊ X-Series EFI Models: 30 Amp
    - ◊ All S-Series Models and X-Series Non-EFI Models: 15 Amp
  - Kohler: 20 Amp
- Battery Type: BCI group U1
- Battery Voltage: 12 Volt
- Polarity: Negative Ground
- Fuses:
  - 20 amp charging system fuse
  - 15 amp accessory fuse
  - 20 amp power fuse
- Low Voltage Light/Error Message: Center of control panel (EFI Models Only)
- Clutch Saver (X-Series EFI Models Only): Allows the throttle to automatically reduce engine RPM when the PTO switch is engaged/disengaged or when stepping off the platform. Engine RPM will resume its setting when stepping back onto the platform and resetting the PTO.

Safety Interlock System

- LCD indicators appear for the park brake, PTO, Neutral, and operator presence in the message display on the front control panel.
- PTO must be disengaged with motion control levers in the neutral position and park brake engaged to start the engine. (It is not necessary for the operator be on the platform in order to start the engine.)

  Note: The PTO Engagement Switch operates differently between the X- and S-Series models (refer to **PTO Engagement Switch** (page 21)).
- Mower blades will stop if operator steps off the platform.

Operator Controls

Steering Control: Fingertip drive control levers provide independent speed control, braking and neutral to each drive wheel for moving forward or reverse, stopping, and power turning.

Transmission

- Two Hydro-Gear variable displacement high efficiency pumps independently coupled to two high efficiency wheel drive motors:
  - X-Series: Hydro-Gear
  - S-Series: Parker
- Hydraulic Oil: Use Exmark Premium Hydro Oil.
- Hydraulic Oil Capacity:
  - X-Series: 6.73 qt. (6.4 L)
  - S-Series: 2.25 qt. (2.1 L)
- Hydraulic Filter is replaceable spin-on type.

  P/N 109-4180: 25 microns, 10 psi bypass (Summer use above 32°F (0°C))

  P/N 1-523541: 40 microns, 18 psi bypass (Winter use below 32°F (0°C))
- Speeds:
  - X-Series:
    - ◊ 0-12 mph (19 km/hr) forward.
    - ◊ 0-5.5 mph (8 km/hr) reverse.
  - S-Series:
    - ◊ 0-8.5 mph (14 km/hr) forward.
    - ◊ 0-5.5 mph (8 km/hr) reverse.
- Drive wheels release valves allow machine to be moved when engine is not running.

Tires & Wheels

All S-Series Models

Front Caster	
Semi-Pneumatic	
Quantity	2
Tread	Smooth
Size	13 x 5-6

All X-Series Models

Front Caster	
Semi-Pneumatic	
Quantity	2
Tread	Smooth
Size	15 x 6-6

S-Series

Drive			
Pneumatic (Air-Filled)			
	48 Inch Models	**52 Inch Models**	**60 Inch Models**
Quantity	2	2	2
Tread	Carlisle Turf Master	Carlisle Turf Master	Carlisle Turf Master
Size	20 x 10-8	20 x 10-8	20 x 10-8
Ply Rating	4	4	4
Pressure	13 psi (90 kPa)	13 psi (90 kPa)	13 psi (90 kPa)

X-Series

Drive			
Pneumatic (Air-Filled)			
	52 Inch Models	**60 Inch Models**	**72 Inch Models**
Quantity	2	2	2
Tread	Hoosier Grassmaster	Hoosier Grassmaster	Hoosier Grassmaster
Size	24 x 9.0-12	24 x 12.0-12	24 x 12.0-12
Ply Rating	4	4	4
Pressure	13 psi (90 kPa)	13 psi (90 kPa)	13 psi (90 kPa)

Cutting Deck

- Cutting Width:
  - 48 inches (121.9 cm)
  - 52 inches (132.1 cm)
  - 60 inches (152.4 cm)
  - 72 inches (182.9 cm)
- Discharge: Side
- Blade Size: (3 ea.):
  - 48 Inch Models: 16.25 inches (41.3 cm)
  - 52 Inch Models: 18.00 inches (45.7 cm)
  - 60 Inch Models: 20.50 inches (52.1 cm)
  - 72 Inch Models: 24.50 inches (62.2 cm)
- Blade Spindles: Solid steel spindles with 1.00 inch (25.4 mm) I.D. bearings.
- Deck Drive:
  - Electric clutch mounted on engine shaft.
  - Blades driven by one belt (w/self-tensioning idlers).
- Number of anti-scalp rollers:
  - 48 and 52 Inch Models: 3 anti-scalp rollers.
  - 60 Inch Models: 4 anti-scalp rollers.
  - 72 Inch Models: 6 anti-scalp rollers
- Deck: Full floating deck is attached to support frame, removable for service. Deck design allows for bagging, mulching or side discharge.
- Deck Depth: 5.5 inches (14 cm)
- Cutting Height Adjustment: All models adjusts from 1.5 inch (3.8 cm) to 5 inches (12.7 cm) in 1/4 inch (6.35 mm) increments.
- Mulching Kit: Optional
- Bagger: Optional

Dimensions

Overall Width:

	48 Inch Models	**52 Inch Models (S-Series)**	**52 Inch Models (X-Series)**
Deflector Up	53.25 inches (135.3 cm)	58.08 inches (147.5 cm)	61.66 inches (156.6 cm)
Deflector Down	60.05 inches (152.5 cm)	64.79 inches (164.6 cm)	64.79 inches (164.6 cm)

	60 Inch Models (S-Series)	**60 Inch Models (X-Series)**	**72 Inch Models**
Deflector Up	61.38 inches (155.91 cm)	63.76 inches (161.9 cm)	73.43 inches (186.5 cm)
Deflector Down	72.87 inches (185.09 cm)	72.87 inches (185.09 cm)	84.84 inches (215.5 cm)

Overall Length:

X-Series

52 Inch Models	**60 Inch Models**	**72 Inch Models**
70.45 inches (178.9 cm)	73.37 inches (186.3 cm)	77.12 (195.9 cm)

S-Series

48 Inch Models	**52 Inch Models**	**60 Inch Models**
65.33 inches (165.9 cm)	65.33 inches (165.9 cm)	68.24 (173.3 cm)

Overall Height:

- X-Series: 48.9 inches (124 cm)
- S-Series: 49.2 inches (125 cm)

Tread Width: (Outside to Outside of Tires, Widthwise)

48 Inch Models	52 Inch Models (S-Series)	52 Inch Models (X-Series)
47.79 inches (121.4 cm)	47.79 inches (121.4 cm)	53.66 inches (136.3 cm)

60 Inch Models (S-Series)	60 Inch Models (X-Series)	72 Inch Models
52.18 (132.5 cm)	59.04 (150.0 cm)	59.04 (150.0 cm)

Curb Weight:

48 Inch Models	52 Inch Models (S-Series)	52 Inch Models (X-Series)
925 lb (420 kg)	936 lb (425 kg)	1250 lb (567 kg)

60 Inch Models (S-Series)	60 Inch Models (X-Series)	72 Inch Models
978 lb (444 kg)	1310 lb (594 kg)	1400 lb (635 kg)

Note: Weights will vary slightly depending on deck size.

Torque Requirements

Bolt Location	Torque
Cutter Housing Spindle Nut	130-160 ft-lb (176-217 N-m)
Blade Mounting Bolt (lubricate with anti-seize)	50-60 ft-lb (68-81 N-m)
Engine Mounting Bolts	30-35 ft-lb (41-47 N-m)
Wheel Lug Nuts	85-105 ft-lb (115-142 N-m)
Wheel Hub Nuts (S-Series)	211-260 ft-lb (286-353 N-m)
Wheel Motor Mounting Bolts (X-Series)	68-82 ft-lb (92-111 N-m)
Wheel Motor Mounting Bolts (S-Series)	30-35 ft-lb (41-47 N-m)
Wheel Motor Mount to Frame (S-Series)	45-55 ft-lb (61-75 N-m)
Engine Deck to Mower Deck	85-105 ft-lb (115-142 N-m)
Rear Deck Strut to Frame Bolt (S-Series)	152-188 ft-lb (206-255 N-m)

Product Overview

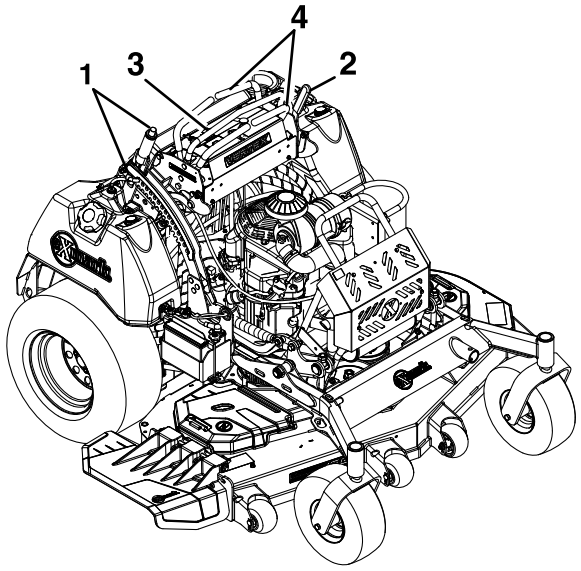

Figure 3

1. Deck lift and Height of cut
2. Park brake lever
3. Controls
4. Motion controls

Operation

Note: Determine the left and right sides of the machine from the normal operating position.

Controls

Note: Become familiar with all the controls before starting the engine and operating the machine.

Motion Control Levers

There are two sets of motion control levers, located in front and behind the reference bar on the top console, that control the forward and reverse motion of the machine.

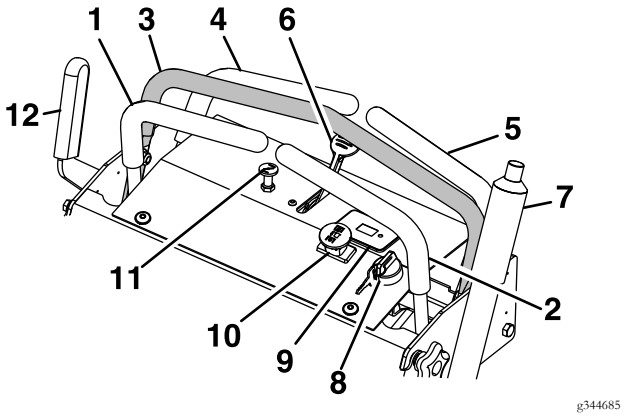

Figure 4

1. LH Motion forward control lever
2. RH Motion forward control lever
3. Reference bar
4. LH Motion reverse control lever
5. RH Motion reverse control lever
6. Throttle
7. Height of cut lever
8. Ignition
9. Message display
10. PTO engagement switch
11. Choke (All Models Except EFI)
12. Park brake

Moving the levers forward or backward turns the wheel on the same side forward or reverse respectively. Wheel speed is proportional to the amount the lever is moved.

Note: When the motion control levers are in the neutral position, and park brake is engaged, a LCD indicator displays on the message display.

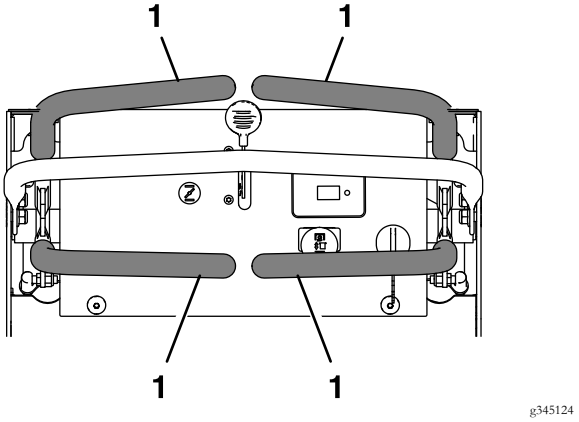

Figure 5

1. Neutral position

Choke Control (All Models Except EFI)

Located on the LH side of the control console (see Figure 4).

The choke is used to aid in starting a cold engine. Pulling up on the choke will put the choke in the "ON" position and pushing down on the choke will put the choke in the "OFF" position. Do Not run a warm engine with the choke in the "ON" position.

Throttle Control (X-Series EFI Models Only)

Located on the center of the control console (black lever).

The throttle is used to control engine speed. Moving the throttle lever forward will increase engine speed and moving the throttle lever to the rear will decrease engine speed.

The machine has a clutch saver, which allows the throttle to automatically reduce engine RPM:

- when the PTO switch is engaged or disengaged.
- when stepping off the platform with the PTO engaged.

Engine RPM will resume its setting when the PTO is reset.

Throttle Control (All S-Series and X-Series Non-EFI Models Only)

Located on the center of the control console (red lever).

The throttle is used to control engine speed. Moving the throttle lever forward will increase engine speed and moving the throttle lever to the rear will decrease engine speed. Moving the throttle forward into the detent is full throttle.

Park Brake Lever

Located on the left side of the machine.

The brake lever engages a parking brake on the drive wheels and locks the motion controls in neutral.

Note: The LCD indicator appears in the message display on the front console when the park brake is engaged (see Figure 4 and Figure 7).

Pull the lever up and rearward to engage the brake.

Push the lever forward and down to disengage the brake.

When parking on a steep slope, the wheels must be chocked or blocked in addition to the brake being engaged. The machine must be tied down and brake engaged when transporting.

Park brake must be disengaged before motion control can move out of neutral.

Ignition Switch

Located on the RH side of the control console.

The ignition switch is used to start and stop the engine. The switch has three positions "OFF", "ON" and "START". Insert key into switch and rotate clockwise to the "ON" position. Rotate clockwise to the next position to engage the starter (key must be held against spring pressure in this position). Allow the key to return to the "ON" position immediately after the engine starts.

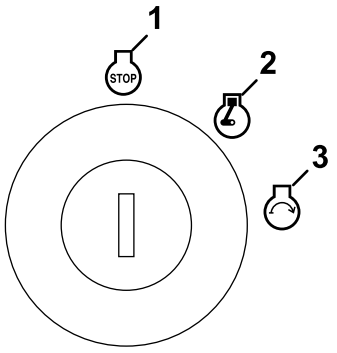

g219837

Figure 6

1. Off
2. On
3. Start

Note: To start the engine, place the motion control levers in neutral and disengage the PTO switch (it is not necessary for the operator to be on the platform).

For X-Series EFI Models:

Note: The system will not allow the machine to start with the PTO switch in the pulled out (up) position.

For All S-Series Models and X-Series Non-EFI Models:

Note: The system will allow the machine to start with the PTO switch in the pulled out (up) position, but will not engage the blades. The PTO engagement switch must be reset to engage the PTO.

Hour Meter

Located on the right side of the control console in the message display (see Figure 7).

The hour meter records the number of hours that the engine has run.

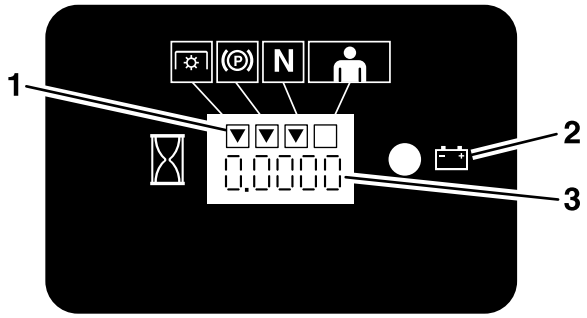

g275343

Figure 7

1. LCD Indicators
2. Low voltage indicator light
3. Hour/Voltage display

The hour meter is recording when the decimal point is flashing in Hour/Voltage display.

Hours are displayed when the key is off or when the machine is running.

Note: If the ignition key is turned to the "ON" position for a few seconds before cranking the engine, the battery voltage will display in the area where the hours are normally displayed.

Note: The LCD indicators appear when each control meets the "safe to start" mode.

Drive Wheel Release Valves

Located

- **For X-Series:** on the front of the hydrostatic pumps.
- **For S-Series:** on the rear of the hydrostatic pumps.

Drive wheel release valves are used to release the hydrostatic drive system to allow the machine to be moved by hand without the engine running.

With a 5/8 wrench, turn both valves one turn counterclockwise to release the drive system.

Turn clockwise to reset the drive system. to 110-130 in-lb (12-15 N-m). **Do Not overtighten. Do Not tow machine.**

PTO Engagement Switch

Located in the center of the console control below the hour meter (reference Figure 4).

Switch must be pulled out (up) to engage the blades. Switch is pushed in to disengage the blades.

The LCD indicator will disappear when the blades are engaged (see Figure 7).

For X-Series EFI Models:

Note: The machine has a clutch saver, which allows the throttle to automatically reduce engine RPM when the PTO switch is engaged/disengaged or when stepping off the platform. Engine RPM will resume its setting when stepping back onto the platform and resetting the PTO.

For All S-Series Models and X-Series Non-EFI Models:

The starter will crank with the PTO switch in the "ON" (pulled up) position; however, the system will disengage the PTO and a PTO reset error will occur. Engaging the PTO will require the operator to reset the PTO switch by turning it "OFF" (pushed down) and then turning it "ON".

Deck Lift Handle

Located on the RH side of the front control panel.

To unlatch from transport, slightly pull the handle rearward and push the button down on top of the lever to disengage the transport lock. Allow the handle to move forward to lower the cutting deck to the cut height that has been set.

To raise to transport position, push the button down on top of the lever to disengage the deck lift latch. Pull the handle all the way rearward and release the button to latch the cutting deck into the raised transport position.

Electronic Control Unit Malfunction Indicator

EFI Units Only:

The electronic control unit (ECU) continuously monitors operation of the EFI system. If a problem or Fault within the system is detected, the malfunction indicator light (MIL) is illuminated. The MIL is the light located in the left console panel to the left of the throttle control. Follow the Troubleshooting steps outlined in the engine operator's manual if the MIL is illuminated.

Before Operation

Before Operation Safety

- Evaluate the terrain to determine what accessories and attachments are needed to properly and safely perform the job. Only use accessories and attachments approved by Exmark.
- Inspect the area where the machine is to be used and remove all rocks, toys, sticks, wires, bones, and other foreign objects. These can be thrown or interfere with the operation of the machine and may cause personal injury to the operator or bystanders.
- This mower was designed for one operator only. Do not carry passengers.
- Wear appropriate personal protective equipment such as safety glasses, long pants, substantial slip-resistant footwear, and hearing protection. Tie back long hair and avoid loose clothing and loose jewelry which may get tangled in moving parts.
- This machine produces sound levels in excess of 85 dBA at the operator's ear and can cause hearing loss through extended periods of exposure. Wear hearing protection when operating this machine.
- Check that the following items are in place and in proper working condition: the operator presence controls, safety switches, guards, shields, discharge deflector and/or the entire grass catcher system. Do not operate the machine unless they are in proper working condition. Replace worn or deteriorated parts with genuine Exmark parts when necessary.

⚠ DANGER

It is essential that operator safety mechanisms be connected and in proper operating condition prior to use. Contacting the blade will result in serious personal injury.

Shut off the engine, remove the key, and wait for all moving parts to stop before leaving the operating position. When the key is turned to the "OFF" position, the engine should shut off and the blade should stop. If not, stop using the machine immediately and contact an Authorized Service Dealer.

- Do Not operate the mower when people, especially children, or pets are in the area. Shut off the machine and attachment(s) if anyone enters the area.
- Do Not operate the machine without the entire grass collection system, discharge deflector, or other safety devices in place and in proper working condition. Grass catcher components are subject to wear, damage and deterioration, which could expose moving parts or allow objects to be thrown. Frequently check for worn or deteriorating components and replace them with the manufacturer's recommended parts when necessary.

Fuel Safety

⚠ DANGER

Gasoline is extremely flammable and vapors are explosive.

A fire or explosion from gasoline can burn you, others, and cause property damage.

- **Fill the fuel tank outdoors on level ground, in an open area, when the engine is cold. If fuel is spilled, Do Not attempt to start the engine. Move away from the area of the spill and avoid creating any source of ignition until fuel vapors have dissipated.**
- **Do Not refill the fuel tank or drain the machine indoors or inside an enclosed trailer.**
- **Never smoke when handling gasoline, and stay away from an open flame or where gasoline fumes may be ignited by spark.**
- **Add fuel before starting the engine. Never remove the cap of the fuel tank or add fuel when engine is running or when the engine is hot.**
- **Store gasoline in an approved container and keep it out of the reach of children.**
- **Do Not operate without entire exhaust system in place and in proper working condition.**

- In certain conditions during fueling, static electricity can be released causing a spark which can ignite gasoline vapors.
  - Do Not fill containers inside a vehicle or on a truck or trailer bed with a plastic liner. Always place containers on the ground and away from your vehicle before filling.
  - When practical, remove gas-powered equipment from the truck or trailer and refuel the equipment with its wheels on the ground. If this is not possible, then refuel such equipment on a truck or trailer from a portable container, rather than from a gasoline dispenser nozzle.
  - If a gasoline dispenser nozzle is used, keep the nozzle in contact with the rim of the fuel tank or container opening at all times until fueling is complete. Do Not use a nozzle lock open device.
- Do Not overfill the fuel tank. Fill the fuel tank to the bottom of the filler neck. The empty space in the tank allows gasoline to expand. Overfilling may result in fuel leakage or damage to the engine or emission system.
- Gasoline is harmful or fatal if swallowed. Long-term exposure to vapors may cause serious injury and illness.
  - Avoid prolonged breathing of vapors.
  - Keep face away from nozzle and gas tank/container opening.
  - Keep away from eyes and skin.
- To help prevent fires:
  - Keep engine and engine area free from accumulation of grass, leaves, excessive grease or oil, and other debris which can accumulate in these areas.
  - Clean up oil and fuel spills and remove fuel soaked debris.
  - Allow the machine to cool before storing the machine in any enclosure. Do Not store the machine or fuel container, or refuel, where there is an open flame, spark, or pilot light such as on a water heater or other appliance.

Operating Safety

During Operation Safety

General Safety

The operator must use their full attention when operating the machine. **Do Not** engage in any activity that causes distractions; otherwise, injury or property damage may occur.

⚠ WARNING

Operating engine parts, especially the muffler, become extremely hot. Severe burns can occur on contact and debris, such as leaves, grass, brush, etc. can catch fire.

Clean the machine as stated in the Maintenance section. Keep engine and engine area free from accumulation of grass, leaves, excessive grease or oil, and other debris which can accumulate in these areas.

- Operate the engine only in well-ventilated areas. Exhaust gases contain carbon monoxide, which is an odorless deadly poison.

- Do not operate the machine while ill, tired, or under the influence of alcohol or drugs.
- Operate the machine only in good visibility and appropriate weather conditions. Do Not operate the machine when there is the risk of lightning.
- Keep away from holes, ruts, bumps, rocks, and other hidden hazards. Use care when approaching blind corners, shrubs, trees, tall grass or other objects that may hide obstacles or obscure vision. Uneven terrain could overturn the machine or cause the operator to lose their balance or footing.
- Start the engine with your feet well away from the blades.
- Do Not operate the machine without all safety shields, guards, switches, and other devices in place and in proper working condition.
- Keep your hands and feet away from the moving parts. Keep clear of the discharge opening.
- Do Not mow with the discharge deflector raised, removed, or altered unless there is a grass-collection system or mulch kit in place and working properly.
- Never raise the deck with blades running.
- Be aware of the mower discharge path and direct discharge away from others. Avoid discharging material against a wall or obstruction as the material may ricochet back toward the operator. Stop the blades, slow down, and use caution when crossing surfaces other than grass and when transporting the mower to and from the area to be mowed.
- Be alert, slow down and use caution when making turns. Do Not mow in reverse unless it is absolutely necessary. Always look down and behind you before moving the machine in reverse.
- Park the machine on level ground. Stop engine, wait for all moving parts to stop, and remove key.
  - Before checking, cleaning or working on the mower.
  - After striking a foreign object or abnormal vibration occurs (inspect the mower for damage and make repairs before restarting and operating the mower).
  - Before clearing blockages.
  - Whenever you leave the mower. Do Not leave a running machine unattended.
- Stop engine, wait for all moving parts to stop:
  - Before refueling.
  - Before dumping the grass catcher.
  - Before making height adjustments.
- Tragic accidents can occur if the operator is not alert to the presence of children. Children are often attracted to the machine and the mowing activity. Never assume that children will remain where you last saw them.
  - Keep children out of the mowing area and under the watchful care of another responsible adult, not the operator.
  - Be alert and turn the machine off if children enter the area.
  - Before and while backing or changing direction, look behind, down, and side-to-side for small children.
  - Never allow children to operate the machine.
  - Do Not carry children, even with the blades shut off. Children could fall off and be seriously injured or interfere with the safe operation of the machine. Children that have been given rides in the past could suddenly appear in the working area for another ride and be run over or backed over by the machine.

Slope Safety

- Slopes are a major factor related to loss of control and rollover accidents, which can result in severe injury or death. The operator is responsible for safe slope operation. Operating the machine on any slope requires extra caution. Before using the machine on a slope, the operator must:
  - Review and understand the slope instructions in the manual and on the machine.
  - Evaluate the site conditions of the day to determine if the slope is safe for machine operation. Use common sense and good judgment when performing this evaluation. Changes in the terrain, such as moisture, can quickly affect the operation of the machine on a slope.
- Operate across slopes, never up and down. Avoid operation on excessively steep or wet slopes. Poor footing could cause a slip and fall accident.
- Identify hazards at the base of the slope. Do Not operate the machine near drop offs, ditches, embankments, water or other hazards. The

machine could suddenly roll over if a wheel goes over the edge or the edge collapses. Keep a safe distance between the machine and any hazard. Use a hand held tool to operate in these areas.

- Avoid starting, stopping or turning the machine on slopes. Avoid making sudden changes in speed or direction; turn slowly and gradually.
- Do Not operate a machine under any conditions where traction, steering or stability is in question. Be aware that operating the machine on wet grass, across slopes or downhill may cause the machine to lose traction. Loss of traction to the drive wheels may result in sliding and a loss of braking and steering. The machine can slide even if the drive wheels are stopped.
- Remove or mark obstacles such as ditches, holes, ruts, bumps, rocks or other hidden hazards. Tall grass can hide obstacles. Uneven terrain could overturn the machine.
- If you lose control of the machine, step away from the direction of travel of the machine.
- Always keep the machine in gear when going down slopes. Do Not coast downhill.

Starting the Engine

1. With the motion control levers in neutral position, pull the parking brake up and rearward to engage the parking brake
2. Push down on the PTO switch to the "disengage" position.

   Note: The S-Series will allow the machine to start with the PTO switch in the pulled out (up) position, but will not engage the blades. The PTO engagement switch must be reset to engage the PTO.
3. Place the throttle midway between the "SLOW" and "FAST" positions.
4. On a cold engine, pull the choke knob upward into the "ON" position (except EFI models).

   On a warm engine, leave the choke in the "OFF" position (except EFI models).
5. Turn ignition switch to the "START" position. Release the switch as soon as the engine starts.

   Important: Do Not crank the engine continuously for more than ten seconds at a time. If the engine does not start, allow a 60 second cool-down period between starting attempts. Failure to follow these guidelines can burn out the starter motor.
6. If the choke is in the "ON" position, gradually return choke to the "OFF" position as the engine warms up.

PTO Engagement

⚠ DANGER

The rotating blades under the mower deck are dangerous. Blade contact will cause serious injury or death.

Do Not put hands or feet under the mower or mower deck when the blades are engaged.

⚠ DANGER

An uncovered discharge opening will allow objects to be thrown in an operator's or bystander's direction. Also, contact with the blade could occur. Thrown objects or blade contact can cause serious injury or death.

Never operate the mower with the discharge deflector raised, removed, or altered unless there is a grass collection system or mulch kit in place and working properly.

The PTO switch engages the cutting blades. Be sure all persons are clear of mower deck and discharge area before engaging the PTO.

1. Set throttle to "MIDWAY" position.
2. Release the parking brake.
3. Motion control levers will stay in the neutral position.
4. Pull the PTO switch outward to engage the blades.

   Note: For X-Series EFI Models Only, the engine RPM will automatically reduce when the PTO switch is engaged to extend the clutch life.
5. Place the throttle in the "FAST" position to begin mowing.

Disengaging the PTO

1. Set the throttle midway between the "SLOW" and "FAST" positions.
2. Push down on the PTO switch to disengage the blades.

Note: For X-Series EFI Models Only, the engine RPM will automatically reduce when the PTO switch is disengaged to extend the clutch life.

Stopping the Engine

1. Bring the machine to a full stop.
2. With the motion control levers in neutral position, place the throttle midway between the "SLOW" and "FAST" positions.
3. Push down on the PTO switch to disengage the blades.
4. Engage the parking brake.
5. Allow the engine to run for a minimum of 15 seconds, then turn the ignition switch to the "OFF" position to stop the engine.
6. Remove the key to prevent children or other unauthorized persons from starting engine.

Driving the Machine

⚠ CAUTION

Machine can spin very rapidly by positioning one lever too much ahead of the other. Operator may lose control of the machine, which may cause damage to the machine or injury.

- **Use caution when making turns.**
- **Slow the machine down before making sharp turns.**

Important: To begin movement (forward or backward), the brake lever must be disengaged (pushed forward) before the motion control levers can be moved.

When the motion control levers are positioned in the center the drive system is in the neutral position (Figure 5).

Note: The "N" LCD indicator appears when the levers are in the neutral position, and the brake is engaged..

With the brake disengaged, the drive system is in the operate position.

Driving Forward

1. Step onto the platform of the machine.

   Note: The OPC LCD indicator appears when the operator is on the platform.

2. Make sure the motion control levers are in the neutral position.
3. Release the parking brake.
4. To move forward in a straight line, move both rear levers forward with equal pressure.

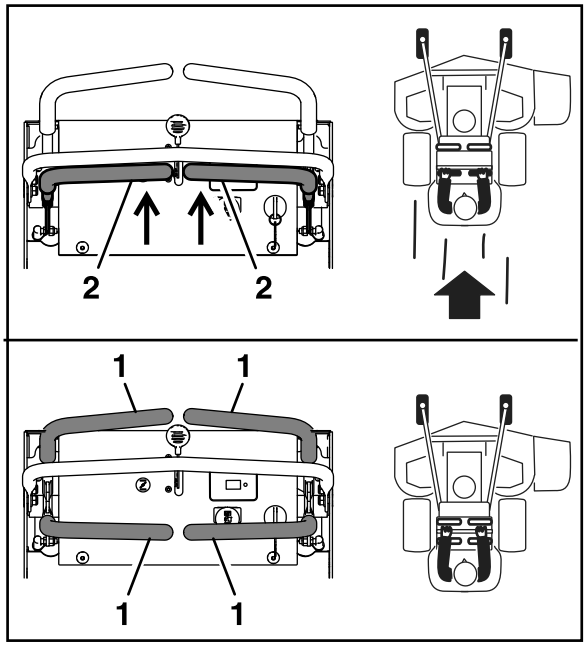

g344862

Figure 8

1. All levers in neutral position
2. Rear levers in forward position

To turn left or right, pull the motion control lever back toward neutral in the desired turn direction.

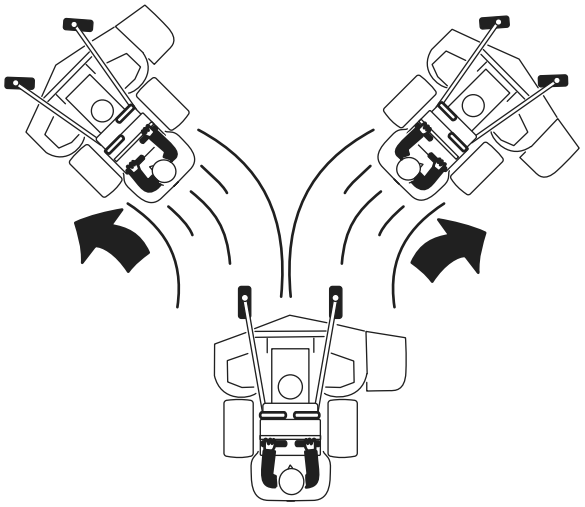

g344905

Figure 9

The machine will move faster the farther the motion control levers are moved from the neutral position.

5. To stop, position both motion control levers in the neutral operate position.

Driving in Reverse

1. Move the motion control levers to the neutral position.
2. To move rearward in a straight line, slowly move both front levers rearward with equal pressure.

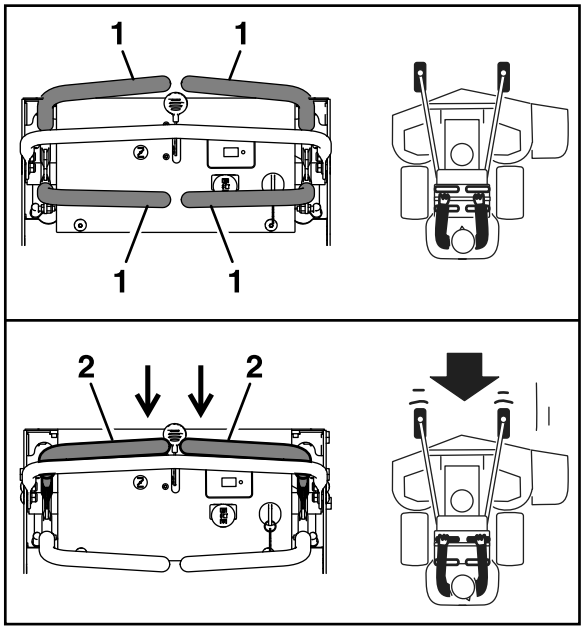

g344873

Figure 10

1. All levers in neutral position
2. Front levers in rearward position

To turn left or right, release pressure on the motion control lever toward the desired turn direction.

3. To stop, position both motion control levers in the neutral position.

Adjusting the Cutting Height

The cutting height of the mower deck is adjusted from 1 1/2 to 5 inches (3.8 cm to 12.7 cm) in 1/4 inch (6.35 mm) increments.

1. Stop the machine and move the motion control levers outward to the neutral locked position.
2. Disengage the PTO.
3. Push the button down on top of the lever to disengage the deck lift latch. Pull the handle all the way rearward and release the button to latch the cutting deck into the 5.0 inch (12.7 cm) transport position.

The deck is raised by pushing the button down on top of the lever to disengage the deck lift latch. Then pull the handle rearward and release the button to place it into the transport lock position.

Note: When changing the cutting height positions, always come to a complete stop and disengage the PTO.

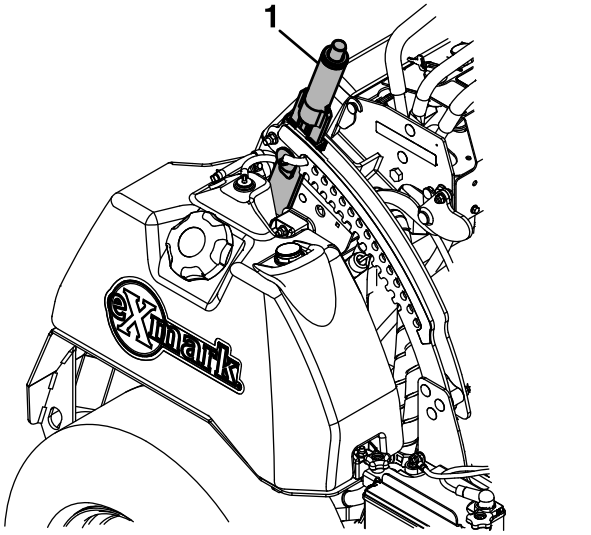

g505957

Figure 11

1. Deck lift handle

4. Insert the height adjustment pin into the hole corresponding to the desired cutting height.

   See the decal on the side of the deck lift plate for cut heights.

5. Slightly pull the deck lift handle rearward and push the button down on top of the lever to disengage the transport lock. Slowly release the handle downward to allow the deck to lower to the cutting height. Release the button.

Adjusting the Anti-Scalp Rollers

It is recommended to change the anti-scalp roller position when the height of cut has changed.

1. Stop the machine and move the drive levers to the neutral position.
2. Disengage the PTO.
3. Engage the park brake.

4. Stop the engine, remove the key and wait for all moving parts to stop.
5. After adjusting the height of cut, adjust the anti-scalp rollers by removing the nyloc nut, spacer, and bolt.
6. Adjust anti-scalp rollers for normal operating conditions. Place rollers in one of the positions shown in Figure 12. Rollers will maintain 3/4 inches (19 mm) clearance to the ground to minimize gouging and roller wear or damage.

   Note: For Maximum Deck Flotation, place rollers one hole position lower. Rollers should maintain 1/4 inch (6.35 mm) clearance to ground. Do Not adjust rollers to support the deck.

   Note: Roller may need to be removed when mowing at 1 inch (25 mm).

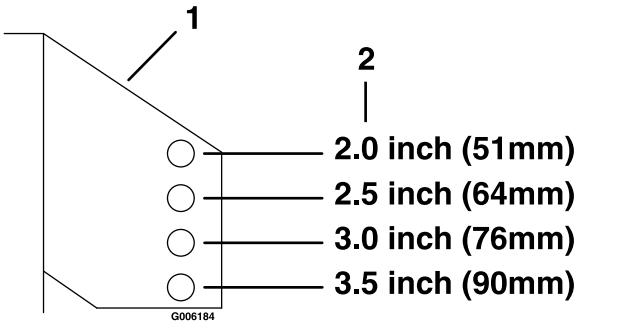

g006184

Figure 12

For cutting heights above 3.5 inches (38 mm) use the bottom hole. The rollers will still be effective against scalping.

1. Anti-scalp roller mounting bracket
2. Cutting height

7. **For S-Series:** Be sure roller bolts are installed with the spring disc washer between head of the bolt and mounting bracket.
8. Reinstall the mounting hardware:
   - **For X-Series:**

     the 3/8-16 nyloc nut to 27-33 ft-lb (37-45 N-m) (Figure 13).

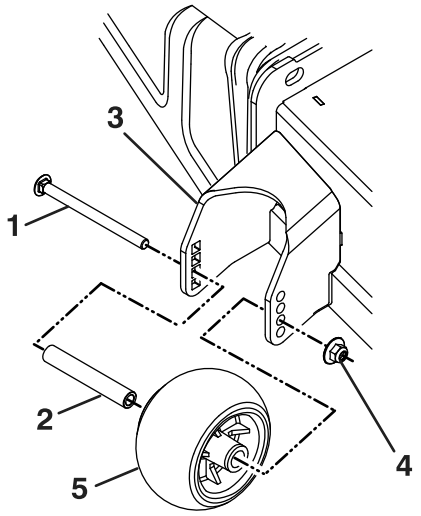

g433945

Figure 13

1. 3/8-16 x 5 inch bolt
2. Spacer
3. Front right anti-scalp bracket shown
4. 3/8 nyloc- to 27-33 ft-lb (37-45 N-m)
5. Anti-scalp roller

   - **For S-Series:**

     the 3/8-16 nyloc nut to 50–55 ft-lb (68-75 N-m) (Figure 14).

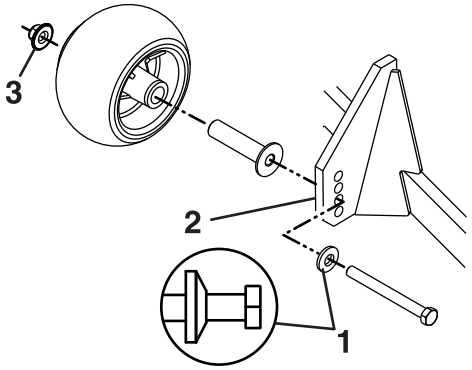

g345136

Figure 14

1. 3/8-16 x 3 3/4 Grade 8 bolt
2. Spring disc washer (cone towards bolt)
3. Front right anti-scalp bracket shown
4. 3/8 nyloc- to 50–55 ft-lb (68-75 N-m)

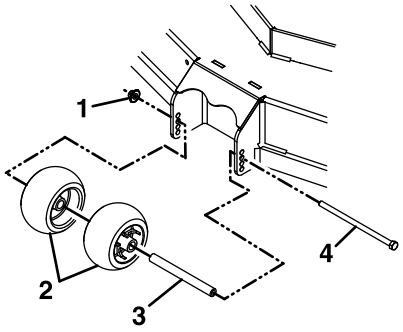

g402287

Figure 15

Center Anti-Scalp Rollers–60 Inch Decks Only

1. 3/8 nyloc- to 50–55 ft-lb (68-75 N-m)
2. Anti-scalp roller
3. Spacer
4. Bolt

After Operation

General Safety

- Park machine on level ground, disengage drives, set parking brake, stop engine, remove key or disconnect spark plug wire. Wait for all movement to stop and allow the machine to cool before adjusting, cleaning, repairing, or storing. Never allow untrained personnel to service machine.
- Clean the machine as stated in the Maintenance section. Keep engine and engine area free from accumulation of grass, leaves, excessive grease or oil, and other debris which can accumulate in these areas. These materials can become combustible and may result in a fire.
- Frequently check for worn or deteriorating components that could create a hazard. Tighten loose hardware.

Transporting

Transporting the Machine

Use a heavy-duty trailer or truck to transport the machine. Ensure that the trailer or truck has all necessary lighting and marking as required by law. Thoroughly read all of the safety instructions. Knowing this information could help you, your family, pets, or bystanders avoid injury.

To transport the machine:

- Use full width ramps when loading the machine.
- Engage the park brake, then block the wheels. Do Not rely solely on the parking brake to hold the machine on the trailer.
- Securely fasten the machine to the trailer or truck with straps, chains, cable, or ropes. If possible, both front and rear straps should be directed down and outward from the machine.
- Secure a trailer to the towing vehicle with safety chains.

⚠ WARNING

Driving on the street or roadway without turn signals, lights, reflective markings, or a slow moving vehicle emblem is dangerous and can lead to accidents causing personal injury.

Do not drive machine on a public street or roadway.

Loading the Machine

Use extreme caution when loading machines on trailers or trucks. One full width ramp that is wide enough to extend beyond the rear tires is recommended instead of individual ramps for each side of the machine. A full width ramp provides a surface to walk on behind the machine. If it is not possible to use one full width ramp, use enough individual ramps to simulate a full width continuous ramp.

A steep ramp angle may cause components to get caught as the machine moves from ramp to trailer or truck. Steeper angles may also cause the machine to tip backward. If loading on or near a slope, position the trailer or truck so it is on the down side of the slope and the ramps extends up the slope. This will minimize the ramp angle. The trailer or truck should be as level as possible.

Important: Do Not attempt to turn the machine while on the ramp, you may lose control and drive off the side.

Avoid sudden acceleration when driving up a ramp and sudden deceleration when backing down a ramp. Both maneuvers can cause the machine to tip backward.

⚠ WARNING

Loading a machine on a trailer or truck increases the possibility of backward tip-over. Backward tip-over could cause serious injury or death.

- **Use extreme caution when operating a machine on a ramp.**
- **Use only a single, full width ramp; Do Not use individual ramps for each side of the machine.**
- **If individual ramps must be used, use enough ramps to create an unbroken ramp surface wider than the machine.**
- **Avoid sudden acceleration while driving machine up a ramp to avoid tipping backward.**
- **Avoid sudden deceleration while backing machine down a ramp to avoid tipping backward.**

Maintenance

Note: Determine the left and right sides of the machine from the normal operating position.

Maintenance Safety

- Park machine on level ground, disengage drives, set parking brake, stop engine, and remove key. Wait for all moving parts to stop before leaving the operator's position. Allow the machine to cool before servicing, adjusting, fueling, cleaning, or storing.
- If you leave the key in the switch, someone could accidently start the engine and seriously injure you or other bystanders. Remove the key from the switch before you perform any maintenance.
- Never allow untrained personnel to service machine.
- Disconnect battery or remove spark plug wire before making any repairs. Disconnect the negative terminal first and the positive last. Reconnect positive first and negative last.
- Keep all guards, shields, switches, and all safety devices in place and in proper working condition. Frequently check for worn or deteriorating components and replace them with genuine Exmark parts when necessary.

⚠ WARNING

Removal or modification of original equipment, parts and/or accessories may alter the warranty, controllability, and safety of the machine. Unauthorized modifications to the original equipment or failure to use original Exmark parts could lead to serious injury or death. Unauthorized changes to the machine, engine, fuel or venting system, may violate applicable safety standards such as: ANSI, OSHA and NFPA and/or government regulations such as EPA and CARB.

⚠ WARNING

Hydraulic fluid escaping under pressure can penetrate skin and cause injury. Fluid accidentally injected into the skin must be surgically removed within a few hours by a doctor familiar with this form of injury or gangrene may result.

- **If equipped, make sure all hydraulic fluid hoses and lines are in good condition and all hydraulic connections and fittings are tight before applying pressure to hydraulic system.**
- **Keep body and hands away from pinhole leaks or nozzles that eject high pressure hydraulic fluid.**
- **Use cardboard or paper, not your hands, to find hydraulic leaks.**
- **Safely relieve all pressure in the hydraulic system by placing the motion control levers in neutral and shutting off the engine before performing any work on the hydraulic system.**

For EFI (Electronic Fuel Injection) Units:

⚠ WARNING

Fuel system components are under high pressure. The use of improper components can result in system failure, gasoline leakage and possible explosion.

Use only approved fuel lines and fuel filters for high pressure systems.

- Use care when checking blades. Wrap the blade(s) or wear gloves, and use caution when servicing them. Only replace damaged blades. Never straighten or weld them.
- Do not rely solely on mechanical or hydraulic jacks for support. Use adequate jack stands.
- Carefully release pressure from components with stored energy.

- Keep your hands and feet away from moving parts or hot surfaces. If possible, do not make adjustments with the engine running.
- Keep all parts in good working condition and all hardware tightened, especially the blade-attachment hardware.

Recommended Maintenance Schedule(s)

Maintenance Service Interval	Maintenance Procedure
After the first 5 hours	• Change the engine oil.
After the first 100 hours	• Check the wheel hub specification (S-Series Only). • Check the wheel lug nuts.
After the first 250 hours	• Change the hydraulic filter and fluid (X-Series). • Change the hydraulic filter and fluid (S-Series).
Before each use or daily	• Check the engine oil level. • Check the mower blades. • Check the safety interlock system. • Check for loose hardware. • Clean the grass and debris build-up from the machine and cutting deck. • Clean the engine and exhaust system area. • Clean the grass build-up from under the deck.
Every 40 hours	• Check the hydraulic oil level.
Every 50 hours	• Check the tire pressures. • Check the condition of the belts. • Check spark arrester (if equipped).
Every 80 hours	• Remove engine shrouds and clean cooling fins.
Every 100 hours	• Change the engine oil. (May need more often under severe conditions.)
Every 200 hours	• Check the spark plugs.
Every 250 hours	• Replace the primary air cleaner element — check secondary air cleaner element; replace if dirty. (May need more often under severe conditions. See the Engine Owner's Manual for additional information.)
Every 500 hours	• Replace the secondary air cleaner element (May need more often under severe conditions. See the Engine Owner's Manual for additional information.) • Change the hydraulic filter and fluid (Every 250 hours/Yearly if using Mobil 1 15W50)(X-Series). • Change the hydraulic filter and fluid (Every 250 hours/Yearly if using Mobil 1 15W50)(S-Series). • Check the wheel hub specification (S-Series Only). • Check the wheel lug nuts.
Yearly	• Grease the deck belt idler pivot.

Periodic Maintenance

Lift the Thigh Pad for Rear Access

Service Interval: As required

The thigh pad can be removed for easy access to the hydro oil reservoir and pumps.

1. Lift the thigh pad roughly thirty degrees and lift to remove from machine.

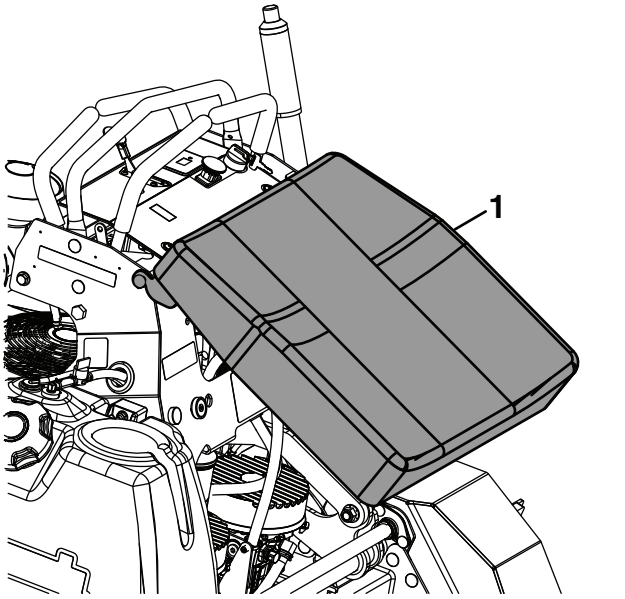

Figure 16

1. Thigh pad

2. Perform any maintenance or adjustment on the machine.

Removing the Rear Guard

Service Interval: As required

1. Remove and retain the thigh pad.
2. Remove and retain the two knobs from the rear guard as shown in Figure 17.

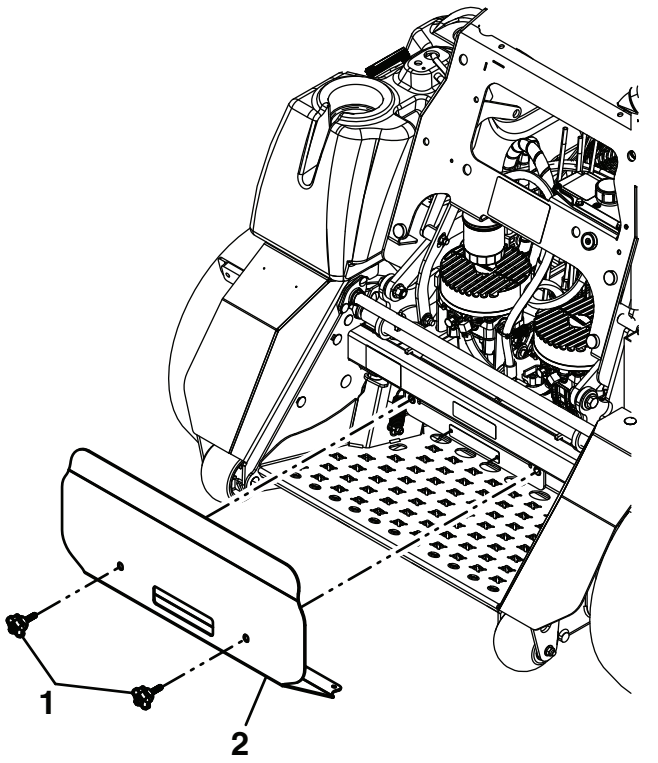

Figure 17

1. Knob
2. Rear guard

3. Pull the rear guard away from machine.
4. After the maintenance or adjustment is complete, reinstall the rear guard and hand tighten the knobs to secure the guard to the machine.
5. Reinstall the thigh pad.

Engine Maintenance

Important: For Kawasaki and Kohler Engines, refer to the Engine Owner's Manual for additional maintenance procedures.

Engine Safety

⚠ WARNING

The engine can become very hot, especially the muffler and exhaust components. Touching a hot engine can cause severe burns.

Allow the engine to cool completely before service or making repairs around the engine area.

Do Not change the engine governor setting or overspeed the engine.

Check Engine Oil Level

Service Interval: Before each use or daily

1. Stop engine and wait for all moving parts to stop. Make sure unit is on a level surface.
2. Check with engine cold.
3. Clean area around dipstick. Remove dipstick and wipe oil off. Reinsert the dipstick according to the engine manufacturer's recommendations. Remove the dipstick and read the oil level.
4. If the oil level is low, wipe off the area around the oil fill cap, remove cap and fill to the "FULL" mark on the dipstick. Exmark 4-Cycle Premium Engine Oil is recommended; refer to the Engine Owner's manual for an appropriate API rating and viscosity. **Do Not** overfill.

Important: Do Not operate the engine with the oil level below the "LOW" (or "ADD") mark on the dipstick, or over the "FULL" mark.

Check Battery Charge

Service Interval: As required

Allowing batteries to stand for an extended period of time without recharging them will result in reduced performance and service life. To preserve optimum battery performance and life, recharge batteries in storage when the open circuit voltage drops to 12.4 volts.

Note: To prevent damage due to freezing, battery should be fully charged before putting away for winter storage.

Charge batteries in an open well ventilated area, away from spark and flames. Unplug charger before connecting or disconnecting from battery. Wear protective clothing and use insulated tools.

⚠ DANGER

Charging or jump starting the battery may produce explosive gases. Battery gases can explode causing serious injury.

- **Keep sparks, flames, or cigarettes away from battery.**
- **Ventilate when charging or using battery in an enclosed space.**
- **Make sure venting path of battery is always open once battery is filled with acid.**
- **Always shield eyes and face from battery.**

⚠ DANGER

Battery electrolyte contains sulfuric acid, which is poisonous and can cause severe burns. Swallowing electrolyte can be fatal or if it touches skin can cause severe burns.

- **Wear safety glasses to shield eyes, and rubber gloves to protect skin and clothing when handling electrolyte.**
- **Do Not swallow electrolyte.**
- **In the event of an accident, flush with water and call a doctor immediately.**

⚠ CAUTION

If the ignition is in the "ON" position there is potential for sparks and engagement of components. Sparks could cause an explosion or moving parts could accidentally engage causing personal injury.

Be sure ignition switch is in the "OFF" position before charging the battery.

Check the voltage of the battery with a digital voltmeter or with the message display When the ignition is set to the accessory mode, the module will display the battery voltage. If the voltage is less than 12.4 volts, the battery may need to be charged.

Important: **Make sure the negative battery cable is disconnected and the battery charger used for charging the battery should have an output of 16 volts and 7 amps or less to avoid damaging the battery (see chart for recommended charger settings). This is especially important on EFI (Electronic Fuel Injection) units. Failure to do so may damage the ECU (Electronic Control Unit).**

Voltage Reading	Percent Charge	Maximum Charger Settings	Charging Interval
12.6 or greater	100%	16 volts/7 amps	No Charging Required
12.4 – 12.6	75–100%	16 volts/7 amps	30 Minutes
12.2 – 12.4	50–75%	16 volts/7 amps	1 Hour
12.0–12.2	25–50%	14.4 volts/4 amps	2 Hours
11.7–12.0	0–25%	14.4 volts/4 amps	3 Hours
11.7 or less	0%	14.4 volts/2 amps	6 Hours or More

Important: **For EFI units: Unplug the harness from the ECU before performing any welding on the equipment.**

Recommended Jump Starting Procedure

Service Interval: As required

1. Check the weak battery for terminal corrosion (white, green, or blue "snow"), it must be cleaned off prior to jump starting. Clean and tighten connections as necessary.

⚠ CAUTION

Corrosion or loose connections can cause unwanted electrical voltage spikes at anytime during the jump starting procedure.

Do Not attempt to jump start with loose or corroded battery terminals or damage to the engine or EFI may occur.

⚠ DANGER

Jump starting a weak battery that is cracked, frozen, has low electrolyte level, or an open/shorted battery cell, can cause an explosion resulting in serious personal injury.

Do Not jump start a weak battery if these conditions exist.

2. Make sure the booster is a good and fully charged lead acid battery at 12.6 volts or greater. Use properly sized jumper cables (4 to 6 AWG) with short lengths to reduce voltage drop between systems. Make sure the cables are color coded or labeled for the correct polarity.

⚠ CAUTION

Connecting the jumper cables incorrectly (wrong polarity) can immediately damage the electrical and/or EFI system.

Be certain of battery terminal polarity and jumper cable polarity when hooking up batteries.

Note: The following instructions are adapted from the SAE J1494 Rev. Dec. 2001 – Battery Booster Cables – Surface Vehicle Recommended Practice (SAE – Society of Automotive Engineers).

⚠ WARNING

Batteries contain acid and produce explosive gases.

- **Shield the eyes and face from the batteries at all times.**
- **Do Not lean over the batteries.**

Note: Be sure the vent caps are tight and level. Place a damp cloth, if available, over any vent caps on both batteries. Be sure the vehicles do not touch and that both electrical systems are off and at the same rated system voltage. These instructions are for negative ground systems only.

3. Connect the positive (+) cable to the positive (+) terminal of the discharged battery that is wired to the starter or solenoid as shown in Figure 18.

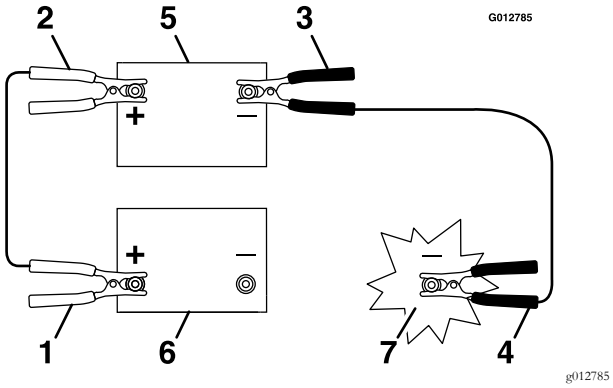

Figure 18

1. Positive (+) cable on discharged battery
2. Positive (+) cable on booster battery
3. Negative (–) cable on the booster battery
4. Negative (–) cable on the engine block
5. Booster battery
6. Discharged battery
7. Engine block

4. Connect the other end of the positive cable to the positive terminal of the booster battery.
5. Connect the black negative (–) cable to the other terminal (negative) of the booster battery.
6. MAKE THE FINAL CONNECTION ON THE ENGINE BLOCK OF THE STALLED VEHICLE (NOT TO THE NEGATIVE POST) AWAY FROM THE BATTERY. STAND BACK.
7. Start the vehicle and remove the cables in the reverse order of connection (the engine block (black) connection is the first to disconnect).

Note: A malfunctioning machine battery may cause the charging voltage to exceed 18.5 volts. The engine will turn off if there is a charge above 18.5 volts. Turn the ignition switch off, then on again to reset the engine before restarting the machine.

Check Mower Blades

Service Interval: Before each use or daily

1. Stop engine, wait for all moving parts to stop, and remove key. Engage parking brake.
2. Lift deck and secure in raised position as stated in the **Clean Grass Build-Up Under Deck** section.
3. Inspect blades and sharpen or replace as required.
4. Reinstall the blades (if they were removed) in the following order:

A. Install bushing through blade with bushing flange on bottom (grass) side of blade.

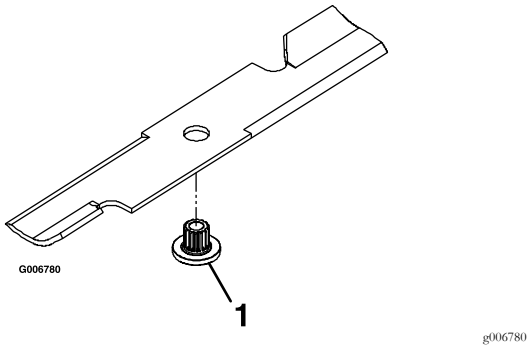

Figure 19

1. Install bushing in blade prior to installing bushing in spindle.

B. Install bushing/blade assembly into spindle.

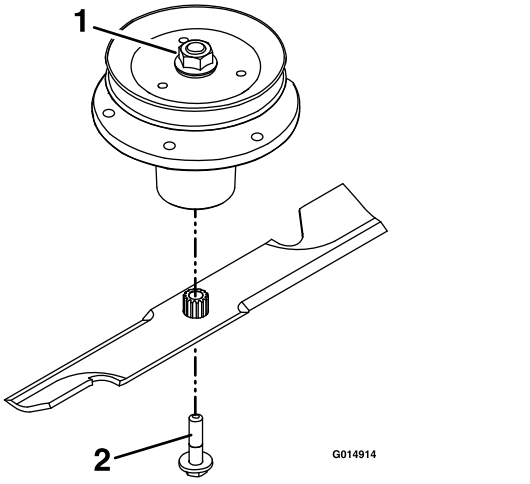

Figure 20

1. Use wrench here for blade installation. This nut has been torqued to 130-160 ft-lb (176–217 N-m)
2. Torque to 50-60 ft-lb (68-81 N-m) Apply lubricant to threads as needed to prevent seizing. Copper-based anti-seize preferable. Grease acceptable substitute.

C. Apply lubricant to threads of blade bolt as needed to prevent seizing. Copper-based anti-seize preferable. Grease acceptable substitute. Install blade bolt finger tight. Place wrench on the top spindle nut then torque the blade bolts to 50-60 ft-lb (68-81 N-m).

⚠ WARNING

Incorrect installation of the blade or components used to retain the blade can be dangerous. Failure to use all original components and assembled as shown could allow a blade or blade component to be thrown out from under the deck resulting in serious personal injury or death.

Always install the original Exmark blades, blade bushings, and blade bolts as shown.

Check Safety Interlock System

Important: It is essential that operator safety mechanisms be connected and in proper operating condition prior to use.

Note: If machine does not pass any of these tests, **Do Not** operate. Contact an Authorized Service Dealer.

Note: To prevent PTO disengagement on rough terrain, the platform has a 1/2 second time delay before the PTO disengages after the operator leaves the platform.

Check the Normal Engine Starting Chart

Service Interval: Before each use or daily

Note: It is not necessary for the operator to be on the platform to start the engine.

X- and S-Series

	System				
	Parking Brake	**PTO (Blades)**	**Motion Control Levers**	**Operator**	**Outcome**
State of System	Engaged 	Disengaged 	In neutral 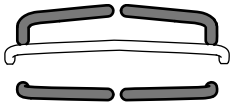	On platform or off the platform  	Starter should crank 

All S-Series Models and X-Series Non-EFI Models Only

	System				
	Parking Brake	**PTO (Blades)**	**Motion Control Levers**	**Operator**	**Outcome**
State of System	Engaged 	Up position, but blades disengaged* 	In neutral 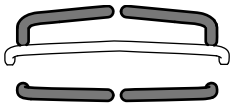	On platform or off the platform  	Starter should crank 

***Note:** The starter will crank with the PTO switch in the "ON" (pulled up) position; however, the system will disengage the PTO and a reset PTO error will occur. Engaging the PTO will require the operator to reset the PTO switch by turning it "OFF" (pushed down) and then turning it "ON".

Check Engine Starting Circuit Chart

Note: In the **Check Engine Starting Circuit Chart**, the state of system item that is bold is being checked in each scenario.

X- and S-Series

	System				
	Parking Brake	**PTO (Blades)**	**Motion Control Levers**	**Operator**	**Outcome**
State of System	**Disengaged** 	Disengaged 	In neutral 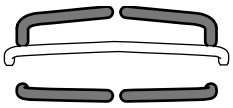	On platform or off the platform  	Starter must not crank 
State of System	Engaged 	Disengaged 	*** Levers not in neutral** both levers moved forward or rearward, or either right or left lever moved forward or rearward 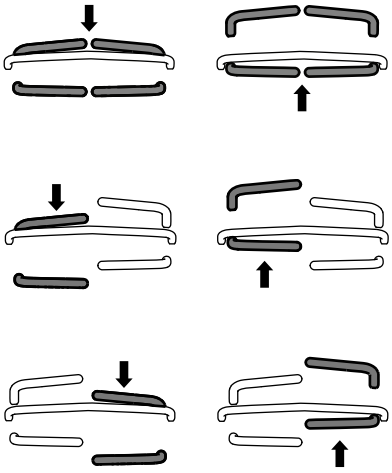	On platform or off the platform  	Starter must not crank 

***Note:** First disengage the parking brake, move the motion controls out of neutral, re-engage the parking brake, then continue checking the scenario.

Check Engine Starting Circuit Chart—continued

X-Series Only

	System				
	Parking Brake	**PTO (Switch)**	**Motion Control Levers**	**Operator**	**Outcome**
State of System	**Disengaged** 	Up position 	In neutral 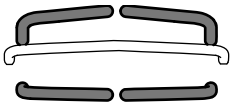	On platform or off the platform 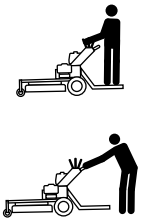	Starter must not crank 

Check Shutdown Circuit Chart

Note: The state of system item(s) that is bold is being checked in each scenario.

X- and S-Series

	System					
	Engine	**Parking Brake**	**PTO (Blades)**	**Motion Control Levers**	**Operator**	**Outcome**
State of System	Running idle (1/3 throttle) 	Engaged or Disengaged 	**Engaged** 	**In neutral** 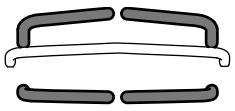	Step off of platform 	**PTO** must begin shutdown within 1 second; engine stays running. 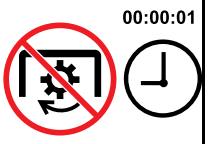

Check for Loose Hardware

Service Interval: Before each use or daily

1. Stop engine, wait for all moving parts to stop, and remove key. Engage parking brake.
2. Visually inspect machine for any loose hardware or any other possible problem. Tighten hardware or correct the problem before operating.

Service Air Cleaner

Service Interval: Every 250 hours—Replace the primary air cleaner element — check secondary air cleaner element; replace if dirty. (May need more often under severe conditions. See the Engine Owner's Manual for additional information.)

Every 500 hours—Replace the secondary air cleaner element (May need more often under severe conditions. See the Engine Owner's Manual for additional information.)

1. Stop engine, wait for all moving parts to stop, and remove key. Engage parking brake.
2. See the Engine Owner's Manual for maintenance instructions.

Check Air Filter Assembly (if equipped)

Service Interval: As required

Important: To prevent engine damage, always operate the engine with both air filters and cover installed.

1. When checking or replacing the air filter element, make sure the air filter assembly is installed in the brackets.
2. Position the air cleaner cover so that the breather valve does not interfere with the throttle mechanism.

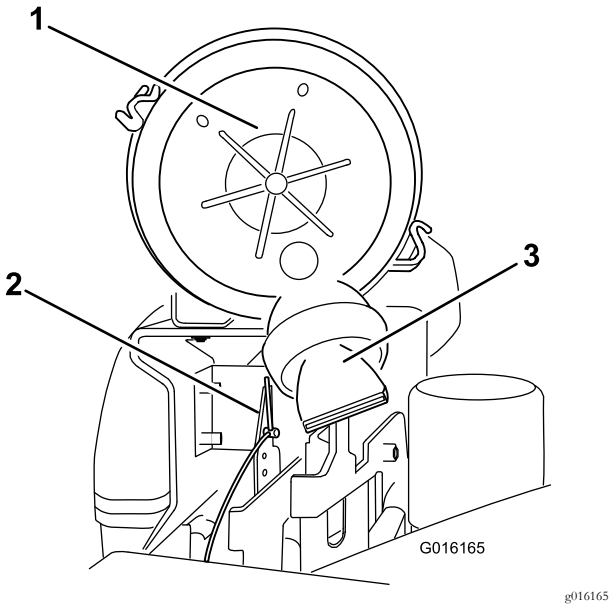

g016165

Figure 21
Kawasaki Engine Only

1. Air cleaner cover
2. Throttle mechanism
3. Breather valve

3. Secure the cover with latches.

Change Engine Oil

Service Interval: After the first 5 hours

Every 100 hours/Yearly (whichever comes first) (May need more often under severe conditions.)

1. Stop engine, wait for all moving parts to stop, and remove key. Engage parking brake.
2. Drain oil while engine is warm from operation.
3. The oil drain hose is located on left hand side of engine at the rear. Place pan under machine to catch oil. Remove plug from end of drain hose. Allow oil to drain and replace oil drain plug. Torque plug to 20-24 ft-lb.
4. Replace the oil filter every other oil change. Clean around oil filter and unscrew filter to remove. Before reinstalling new filter, apply a thin coating of Exmark 4–Cycle Premium Engine oil on the surface of the rubber seal. Turn filter clockwise until rubber seal contacts the filter adapter then tighten filter an additional 1/2 to 3/4 turn.
5. Clean around oil fill cap and remove cap. Fill to specified capacity and replace cap.

6. Use oil recommended in the **Check Engine Oil Level** section. **Do Not** overfill. Start the engine and check for leaks.
7. Wipe up any spilled oil from engine deck mounting surfaces.

Check Hydraulic Oil Level

Service Interval: Every 40 hours

1. Stop engine and wait for all moving parts to stop, and remove key. Engage parking brake.
2. Clean area around hydraulic reservoir cap and remove cap.
   - **X-Series:**
     A. Wipe the dipstick clean and re-insert the cap back into the hydro. Lightly tighten the cap.
     B. Remove the cap again and check the level of the oil on the dipstick. See Figure 22 for oil levels.

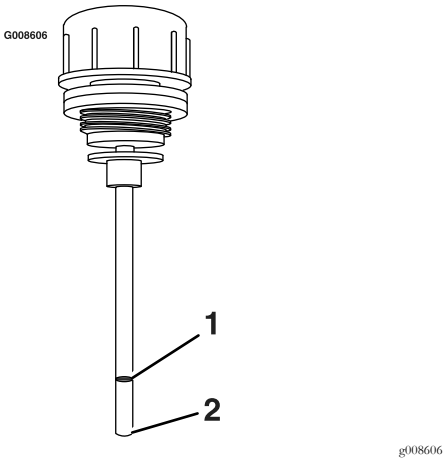

Figure 22

1. Full
2. Add

Note: The oil level on the dipstick will be incorrect if the oil is checked when the machine is hot.

Note: The dipstick has a cross-hatched area for hot oil (upper end) and cold oil (lower end). The oil level varies with the temperature of the oil. The upper end of cross-hatching shows the level of oil when it is at 225°F (107°C). The lower end of cross-hatching shows the level of the oil when it is at 75°F (24°C). Fill to the appropriate level depending upon the temperature of the oil. For example: If the oil is about 150° F (65°C), fill to halfway in the cross-hatched area. If the oil is at room temperature (about 75° F (24°C)), fill only to the lower end.

- **S-Series:**

  Oil level should be to the top of the baffle inside the tank.

  The baffle is labeled "HOT" and "COLD". The oil level varies with the temperature of the oil. The "HOT" level shows the level of oil when it is at 225°F (107°C). The "COLD" level shows the level of the oil when it is at 75°F (24°C). Fill to the appropriate level depending upon the temperature of the oil. For example: If the oil is about 150°F (65°C), fill to halfway between the "HOT" and "COLD" levels. If the oil is at room temperature (about 75°F (24°C)), fill only to the "COLD" level.

3. If the oil level is below the "ADD" or "COLD" level, add Exmark Premium Hydro Oil. **Do Not overfill.**
4. Replace hydraulic reservoir cap and tighten until snug. **Do Not overtighten.**

Check Tire Pressures

Service Interval: Every 50 hours

1. Stop engine, wait for all moving parts to stop, and remove key. Engage parking brake.
2. Check tire pressure in drive tires.
3. Inflate drive tires to 12–14 psi (83–97 kPa).
4. Semi-pneumatic caster tires do not need to be inflated.

Check Condition Of Belts

Service Interval: Every 50 hours

1. Stop engine, wait for all moving parts to stop, and remove key. Engage parking brake.
2. Look on the top side of the cutting deck to check the mower blade drive belt condition.
3. Look under the engine deck to check the pump drive belt condition.
4. Check all idler arms to be sure they pivot freely.

Lubricate Grease Fittings

Note: See chart for service intervals.

1. Stop engine, wait for all moving parts to stop, and remove key. Engage parking brake.
2. Lubricate fittings with NLGI grade #2 multi-purpose gun grease.

   Refer to the following chart for fitting locations and lubrication schedule.

Lubrication Chart

Lubrication Chart			
Fitting Locations	**Initial Pumps**	**Number of Places**	**Service Interval**
1. Deck Idler Pivot	1	2	Yearly
2. Front Caster Pivots	*0	2	*Yearly

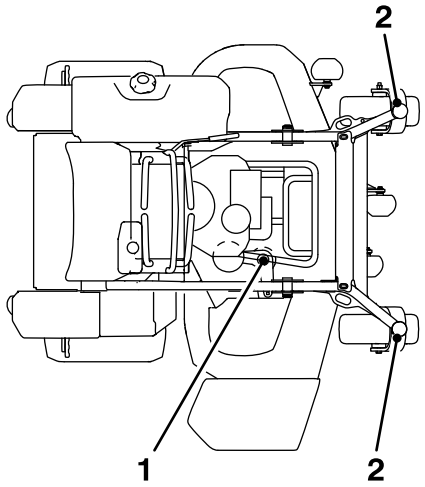

g452849

Figure 23

Lubricate Caster Wheel Hubs

Service Interval: As required

1. Stop engine, wait for all moving parts to stop, and remove key. Engage parking brake.

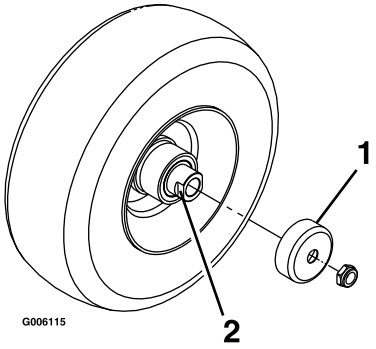

g006115

Figure 24

1. Seal guard
2. Spacer nut with wrench flats

2. Remove caster wheel from caster forks.
3. Remove seal guards from the wheel hub.
4. Remove one of the spacer nuts from the axle assembly in the caster wheel. Note that thread locking adhesive has been applied to lock the spacer nuts to the axle. Remove the axle (with the other spacer nut still assembled to it) from the wheel assembly.
5. Pry out seals, and inspect bearings for wear or damage and replace if necessary.
6. Pack the bearings with a NLGI grade #1 multi-purpose grease.
7. Insert one bearing, one new seal into the wheel.

   Note: Seals (Exmark P/N 103-0063) must be replaced.
8. If the axle assembly has had both spacer nuts removed (or broken loose), apply a thread locking adhesive to one spacer nut and thread onto the axle with the wrench flats facing outward. Do Not thread spacer nut all of the way onto the end of the axle. Leave approximately 1/8 inch (3 mm) from the outer surface of the spacer nut to the end of the axle inside the nut.
9. Insert the assembled nut and axle into the wheel on the side of the wheel with the new seal and bearing.
10. With the open end of the wheel facing up, fill the area inside the wheel around the axle full of NLGI grade #1 multi-purpose grease.

11. Insert the second bearing and new seal into the wheel.
12. Apply a thread locking adhesive to the 2nd spacer nut and thread onto the axle with the wrench flats facing outward.
13. Torque the nut to 75-80 in-lb (8-9 N-m), loosen, then re-torque to 20-25 in-lb (2-3 N-m). Make sure axle does not extend beyond either nut.
14. Reinstall the seal guards over the wheel hub and insert wheel into caster fork. Reinstall caster bolt and tighten nut fully.

Important: To prevent seal and bearing damage, check the bearing adjustment often. Spin the caster tire. The tire should not spin freely (more than 1 or 2 revolutions) or have any side play. If the wheel spins freely, adjust torque on spacer nut until there is a slight amount of drag. Reapply thread locking adhesive.

Check Spark Plugs

Service Interval: Every 200 hours

Remove spark plugs, check condition and reset gaps, or replace with new plugs. See Engine Owner's Manual.

Change Fuel Filter

Service Interval: As required

A fuel filter is installed between the fuel tank and the engine. Replace when necessary.

Note: It is important to reinstall the fuel line hoses and secure with plastic ties the same as they were originally installed at the factory to keep the fuel line away from components that could cause fuel line damage.

Change Hydraulic System Filter and Fluid (X-Series)

Service Interval: After the first 250 hours

Every 500 hours/Yearly (whichever comes first) thereafter.
(Every 250 hours/Yearly if using Mobil 1 15W50 thereafter)

Note: Use only Exmark Part No. 109-4180 for Summer use above 32°F (0°C) or P/N 1-523541 for Winter use below 32°F (0°C) (Refer to **Transmission** section in Specifications for filter specifications).

1. Stop engine, wait for all moving parts to stop, and remove key or spark plug wire(s). Engage parking brake.
2. Remove and retain the thigh pad and rear guard.
3. Raise the rear of machine up and support with jack stands (or equivalent support) just high enough to allow drive wheels to turn freely.

⚠ CAUTION

Raising the mower for service or maintenance relying solely on mechanical or hydraulic jacks could be dangerous. The mechanical or hydraulic jacks may not be enough support or may malfunction allowing the unit to fall, which could cause injury.

Do Not rely solely on mechanical or hydraulic jacks for support. Use adequate jack stands or equivalent support.

4. Remove and retain right and left drive tires and lug nuts.
5. Use a catch pan when draining the hydro oil.
6. There are three drains that need to be removed to do a complete fluid change. Place a pan under each drain from the following components: hydraulic filter and the left and right wheel motors.

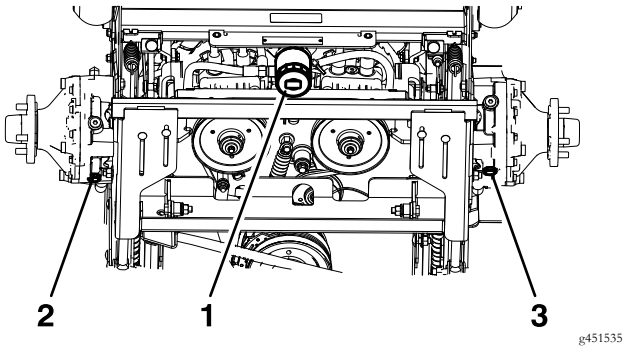

Figure 25

Some components removed for clarity

1. Hydraulic filter
2. Left wheel motor plug
3. Right wheel motor plug

7. Carefully clean area around filter. It is important that no dirt or contamination enter hydraulic system.

8. Unscrew the filter to remove and allow fluid to drain from the reservoir.

   Important: Before reinstalling new filter, fill it with 6 oz (.18 L) Exmark Premium Hydro oil and apply a thin coat of oil on the surface of the rubber seal.

   Install a new filter and turn the filter clockwise until the rubber seal contacts the filter adapter, then tighten the filter an additional 2/3 to 3/4 turn.

9. Remove the lowest plugs on the left and right wheel motors and allow the fluid to drain.

10. Reinstall both wheel motor plugs. The wheel motor drain plugs are magnetic; wipe clean before reinstalling.

11. Remove the fill port plug which is located near the "A" port on each wheel motor.

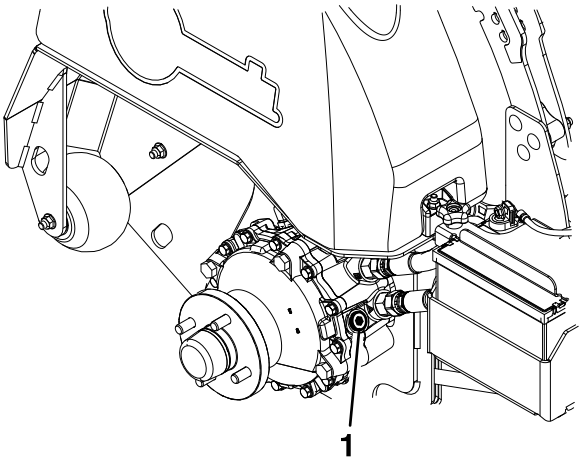

Figure 26

1. Fill port

   A. Fill the right-hand wheel motor up to the fill plug (approximately 29 oz (.95 L)).

   B. Fill the left-hand wheel motor up to the fill plug (approximately 42 oz (1.24 L)).

   C. Reinstall the plugs and torque to 46-50 ft-lb (62-68 N-m).

12. Exmark Premium Hydro Oil is recommended to fill the reservoir. Refer to the chart for an acceptable alternative:

Hydro Oil	Service Interval
Exmark Premium Hydro Oil (Preferred)	After first 250 hours *Every 500 hours/Yearly thereafter
Mobil 1 15W50	After first 250 hours *Every 250 hours/Yearly thereafter

   *May need more often under severe conditions.

13. Fill reservoir as stated in **Check Hydraulic Oil Level.**

14. Remove the reservoir cap from the fluid tank.

15. Add 48 oz (1.41 L) of oil to the reservoir.

    Note: The machine may need to be started and ran in order to add all 48 oz (1.42 L) to the reservoir (reference Step 16 and Step 17). Total amount of oil added will be approximately 125 oz (3.9 qt (3.7L)). The reservoir will be overfull at this point, but the level will drop slightly once the machine is started and oil fills the rest of the system.

16. Reinstall the drive tires and torque the lug nuts as recommended (see **Torque Requirements** (page 18)).

17. Start engine and move throttle control ahead to full throttle position. Disengage parking brake and move motion control levers forward with equal pressure, and run for one minute. Shut down the machine, allow the hydros to cool.

18. Check the level of the hydraulic oil; refer to **Check Hydraulic Oil Level** section.

    Add enough oil to put the level in the cross-hatched area on the dipstick. Reinstall the cap.

19. If either drive wheel does not rotate, one or both of the charge pumps may have lost their "prime." Refer to **Hydraulic System Air Purge** section.

20. Reinstall the rear guard and thigh pad.

21. Remove the jack stands.

Note: Do Not change hydraulic system oil (except for what can be drained when changing filter), unless it is felt the oil has been contaminated or been extremely hot.

Changing oil unnecessarily could damage hydraulic system by introducing contaminates into the system.

Change Hydraulic System Filter and Fluid (S-Series)

Service Interval: After the first 250 hours

Every 500 hours/Yearly (whichever comes first) thereafter. (Every 250 hours/Yearly if using Mobil 1 15W50 thereafter)

Note: Use only Exmark Part No. 109-4180 for Summer use above 32°F (0°C) or P/N 1-523541 for Winter use below 32°F (0°C) (Refer to **Transmission** section in Specifications for filter specifications).

1. Stop engine, wait for all moving parts to stop, and remove key or spark plug wire(s). Engage parking brake.
2. Remove and retain the thigh pad and rear guard.
3. Raise the rear of machine up and support with jack stands (or equivalent support) just high enough to allow drive wheels to turn freely.
4. Use a catch pan when draining the hydro oil.
5. Place a catch pan under the hydro filter.
6. Carefully clean area around filter. It is important that no dirt or contamination enter hydraulic system.
7. Unscrew filter to remove and allow oil to drain from reservoir. Remove clamp and one hose from the reservoir to fully drain the machine.

   Important: Before reinstalling new filter, fill it with Exmark Premium Hydro oil and apply a thin coat of oil on the surface of the rubber seal.

   Turn filter clockwise until rubber seal contacts the filter adapter, then tighten the filter an additional 2/3 to 3/4 turn.
8. Reinstall the hose and clamp onto reservoir fitting.
9. Exmark Premium Hydro Oil is recommended to fill the reservoir. Refer to the chart for an acceptable alternative:

Hydro Oil	Service Interval
Exmark Premium Hydro Oil (Preferred)	After first 250 hours *Every 500 hours/Yearly thereafter
Mobil 1 15W50	After first 250 hours *Every 250 hours/Yearly thereafter

*May need more often under severe conditions.

10. Fill reservoir as stated in **Check Hydraulic Oil Level.**
11. Loosen filter 1/2 turn and allow a small amount of oil to leak from the oil filter (this allows air to be purged from the oil filter and supply hose from the hydraulic reservoir). Turn filter clockwise until rubber seal contacts the filter adapter. Then tighten the filter an additional 2/3 to 3/4 turn.
12. Start engine and move throttle control ahead to full throttle position. Disengage parking brake and move motion control levers forward with equal pressure, and run for one minute. Shut down the machine, allow the hydros to cool.
13. Check the level of the hydraulic oil; refer to **Check Hydraulic Oil Level** section.
14. If either drive wheel does not rotate, one or both of the charge pumps may have lost their "prime." Refer to **Hydraulic System Air Purge** section.
15. Reinstall the rear guard and thigh pad.
16. Remove the jack stands.

Note: Do Not change hydraulic system oil (except for what can be drained when changing filter), unless it is felt the oil has been contaminated or been extremely hot.

Changing oil unnecessarily could damage hydraulic system by introducing contaminates into the system.

Hydraulic System Air Purge

Service Interval: As required

Air must be purged from the hydraulic system when any hydraulic components, including oil filter, are removed or any of the hydraulic lines are disconnected.

The critical area for purging air from the hydraulic system is between the oil reservoir and each charge pump located on the top of each variable displacement pump (Figure 27). Air in other parts of the hydraulic system will be purged through normal operation once the charge pump is "primed".

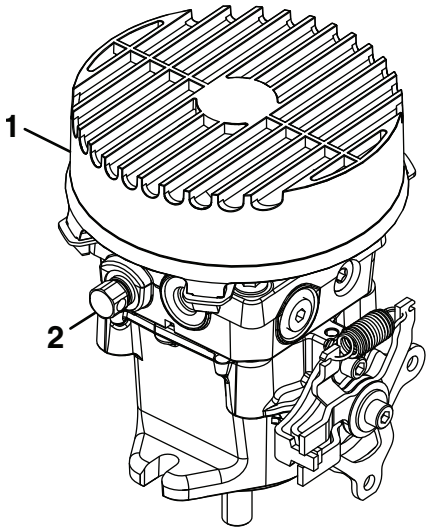

Figure 27

1. Pump fan and guard
2. Bypass valve

1. Stop engine and wait for all moving parts to stop. Raise the rear of the machine up onto jack stands high enough to raise the drive wheels off the ground.
2. Check oil level as stated in **Check Hydraulic Oil Level** section.
3. Start engine and move throttle control ahead to full throttle position. Disengage parking brake and move motion control levers forward with equal pressure.

   If either drive wheel does not rotate, it is possible to assist the purging of the charge pump by carefully rotating the tire in the forward position.

   Note: It is necessary to lightly touch the pump to check the pump temperature. If the pump is too hot to touch, turn off engine. The pumps may be damaged if the pump becomes too hot.

   If either drive wheel still does not rotate continue with step 4.
4. Open the bypass valve (shown in Figure 27).
5. With the bypass valve open and the engine running, slowly move the motion control levers in both forward and reverse directions five to six times. As air is purged from the unit, the oil level in the reservoir will drop.
6. Close the bypass valve. With the bypass valve closed and the engine running, slowly move the motion control levers in both forward and reverse directions five to six times.
7. Allow unit to run several minutes after the charge pumps are "primed" with drive system in the full speed position. Check oil level as stated in **Check the Hydraulic Oil Level** section.
8. Check hydro drive linkage adjustment as stated in **Hydro Drive Linkage Adjustment** section in Adjustments.

Wheel Hub Nut Specification–S-Series Only

Service Interval: After the first 100 hours
Every 500 hours thereafter

Torque the nut on the wheel motor tapered shaft to 211-260 ft-lb (286-352 N-m).

Note: Do **Not** use anti-seize compound on the wheel hub.

Check Spark Arrester (if equipped)

Service Interval: Every 50 hours

⚠ WARNING

Hot exhaust system components may ignite gasoline vapors even after the engine is stopped. Hot particles exhausted during engine operation may ignite flammable materials. Fire may result in personal injury or property damage.

Do Not refuel or run engine unless spark arrester is installed.

1. Stop engine, wait for all moving parts to stop, and remove key. Engage parking brake.
2. Wait for muffler to cool.
3. If any breaks in the screen or welds are observed, replace arrester.
4. If plugging of the screen is observed, remove arrester and shake loose particles out of the arrester and clean screen with a wire brush (soak in solvent if necessary). Reinstall arrester on exhaust outlet.

Thread Locking Adhesives

Thread locking adhesives such as "Loctite 242" or "Fel-Pro, Pro-Lock Nut Type" are used on the following fasteners:

- Pump sheave screws.
- Sheave retaining bolt in end of engine crankshaft.

General Purpose Grease (Or Food-Grade Anti-seize)

General purpose grease (or food-grade anti-seize) is used in the following locations:

—Between splines of the cutter housing spindle and sheave.

Copper-Based Anti-seize

Copper-based anti-seize is used in the following locations:

- On threads of Blade Bolts. See **Check Mower Blades** section.
- Between engine crankshaft, PTO shaft, and PTO pulley.
- Between pump shafts and sheaves.

Dielectric Grease

Dielectric grease is used on all blade type electrical connections to prevent corrosion and loss of contact. Dielectric grease should not be applied to sealed connectors.

Adjustments

Note: Disengage PTO, shut off engine, wait for all moving parts to stop, engage parking brake, and remove key before servicing, cleaning, or making any adjustments to the machine.

Deck Leveling

Note: Small adjustments can be accomplished by increasing the tire pressure in the tire on the low side.

1. Adjust the height — to increase, turn the adjuster screw clockwise; to decrease, turn counterclockwise.
2. Loosen the jam nuts on the top of each deck adjuster. Fine tune the adjuster on the front deck lift assembly by turning it to get the correct height for the center deck left and right front blade tips
3. Measure the back tip height. Fine tune rear adjusters as required
4. Re-measure until all four sides are the correct height. Tighten all the jam nuts on the deck lift arm assemblies

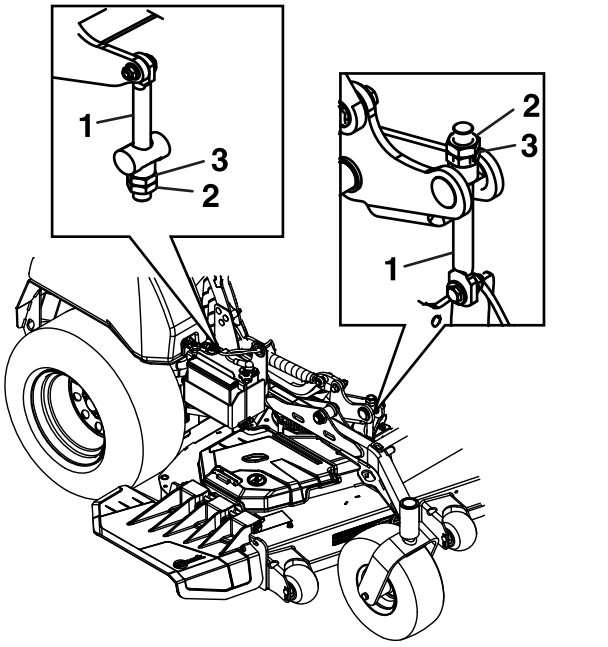

g505988

Figure 28

1. Adjuster link
2. Adjuster
3. Jam nut

5. Position the mower on a flat surface.
6. Stop engine, wait for all moving parts to stop, and remove key. Engage parking brake.
7. Check the tire pressure in drive tires and pneumatic front caster tires (if equipped). Proper inflation pressure for tires is 13 psi (90 kPa). Adjust if necessary
8. Push the button down on top of the lever to disengage the deck lift latch. Pull the handle all the way rearward and release the button to latch the cutting deck into the raised transport position.
9. Insert the height adjustment pin into the 3 inch (7.6 cm) cutting height location.
10. Slightly pull the handle rearward and push the button down on top of the lever to disengage the transport lock. Allow the handle to move forward to lower the cutting deck to the cutting height.
11. Raise the discharge deflector.
12. Carefully rotate the blades front to rear. Measure from the level surface to the front tip of the center blade. The measurement should read 3 inches (7.6 cm).

Note: In most conditions, the back tips on the side blades should be adjusted 1/8-1/4 inch (3.2-6.4 mm) higher than the front.

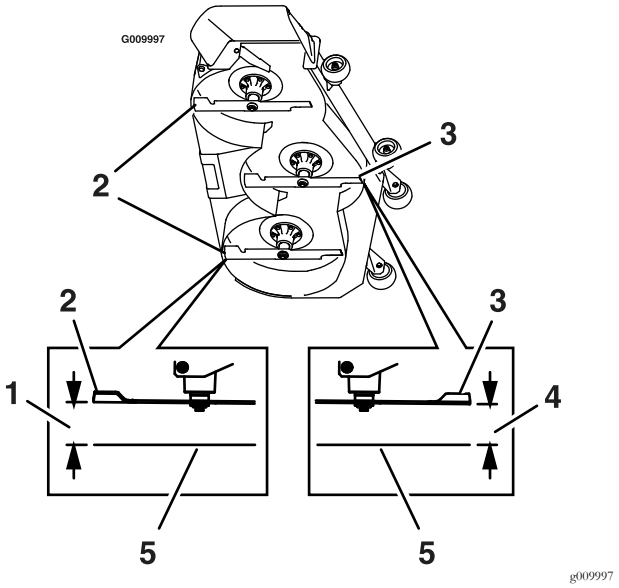

g009997

Figure 29

1. 3 1/8-3 1/4 inches (7.9-8.3 cm)
2. Back blade tip
3. Front blade tip
4. 3 inches (7.6 cm)
5. Level surface

13. Raise the deck to transport position.

Pump Drive Belt Tension

Self-tensioning - No adjustment necessary.

Mower Deck Drive Belt Tension

Self-tensioning - No adjustment necessary.

Park Brake Adjustment–S-Series Only

If the parking brake does not hold securely, an adjustment is required.

1. Park the machine on a level surface.
2. Shut off engine and wait for all moving parts to stop.
3. When the park brake is released, the brake bars should lift off the tires and the hand lever should travel forward. When the brake is disengaged, the gap between the brake snubber teeth and drive tire on the right side of the machine should measure 1/4–3/8 inch (6–10 mm) (see Figure 30).
   - 48 and 52 Inch Models: Measure from center teeth
   - 60 Inch Model: Measure from outer tooth

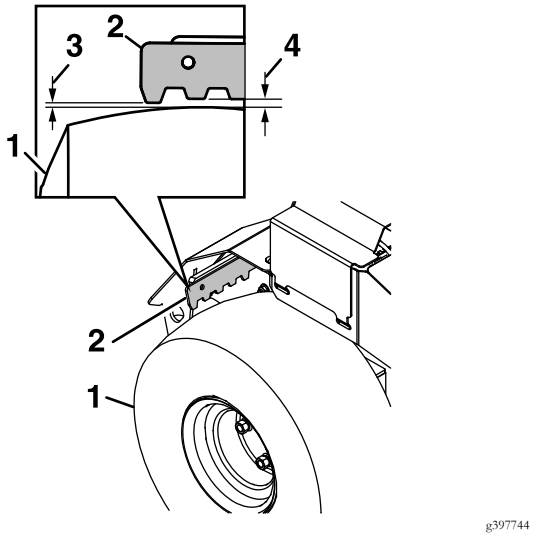

Figure 30

1. Tire
2. Brake snubber teeth
3. 1/4–3/8 inch (6–10 mm)—60 Inch Model
4. 1/4–3/8 inch (6–10 mm)—48 and 52 Inch Models

4. If the parking brake still does not hold securely, an adjustment is required. To adjust the brake, loosen whizlock nuts and slide the lower link up or down until the measurement is achieved.

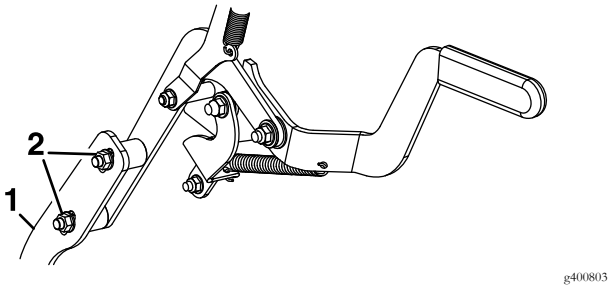

Figure 31

1. Lower link
2. Whizlock nut

5. Tighten the whizlock nuts to 27-33 ft lb (37-45 N-m).

Motion Control Tracking Adjustment

If the machine travels or pulls to one side when the motion control levers are in the full forward position, adjust the rear control links.

1. Remove the thigh pad.
2. Adjust the rear control link (see Figure 32).
   A. Shorten link to increase speed.
   B. Lengthen link to decrease speed.

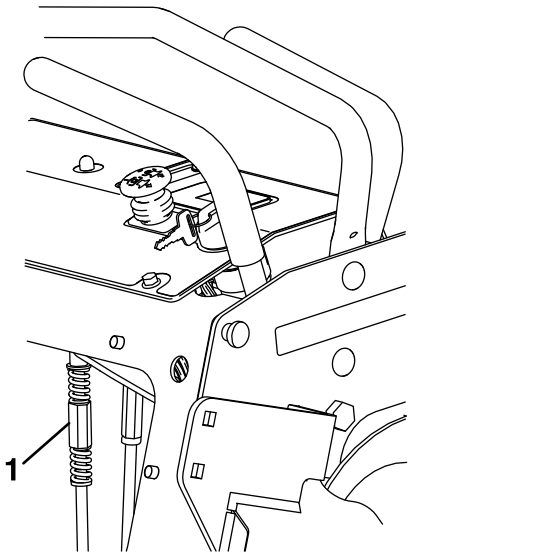

Figure 32

1. Link

3. Replace thigh pad.
4. Drive the machine and check the full forward tracking.
5. Repeat steps 1 through 4 until desired tracking is obtained.

Note: The motion control lever needs to be in neutral while making any necessary adjustments.

Motion Control Neutral Lock Adjustment

There is a plate under the control panel that engages notches in the motion controls when the brake is applied in neutral. If the parking brake plate tabs do not engage these notches, adjust the front control links.

1. Slowly apply the brake while observing the tabs of the brake plate engaging the notches in the motion controls. The lock plate should drop easily and freely into the notches on each side.
2. Check that controls are in neutral. Adjust each side via the front control link (see Figure 33).

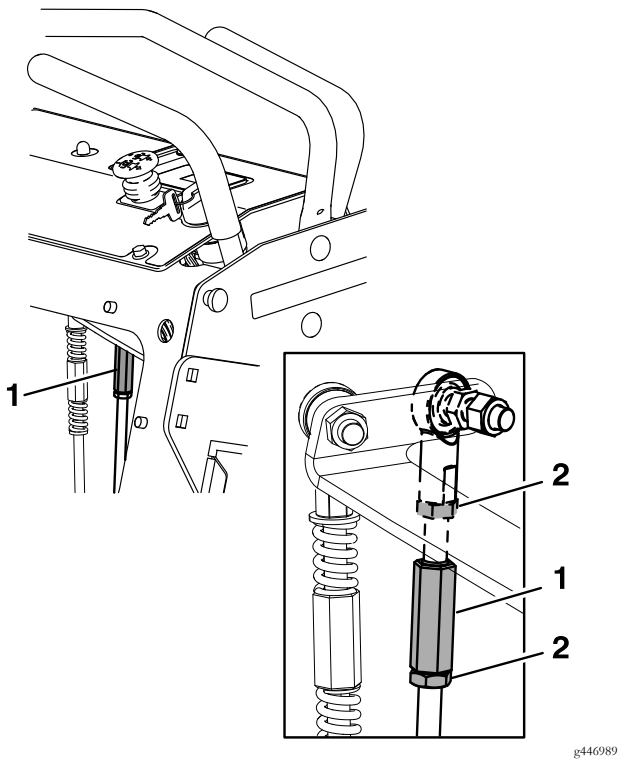

Figure 33

1. Link
2. Jam nut

3. Remove the thigh pad.
4. Loosen upper and lower jam nuts at the top of the front control link.
   A. Lengthen link to move control rearward.
   B. Shorten link to move control forward.
5. Partially cycle brake on and off to observe plate movement in and out of notch.
6. Tighten jam nuts.
7. Replace thigh pad.
8. Check full forward tracking.

Motion Control Lever–Drive Comfort Adjustment

1. Remove the thigh pad.
2. The motion control link can be adjusted into the following positions to decrease the amount of force on the motion control levers.

   - **Maximum force (factory setting) / Maximum speed forward and reverse:**

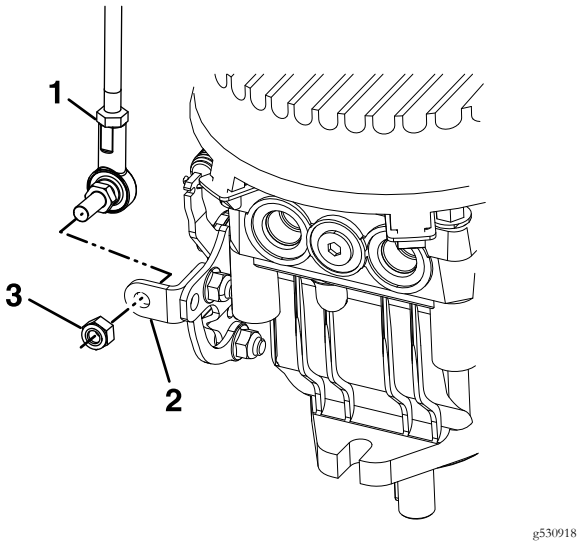

Figure 34
Right side shown

1. Motion control link
2. Pump control bracket
3. Nut

   - **Medium force / Reduced speed forward and reverse**:

     Remove the pump control bracket and position the link directly to the inside of the pump control arm.

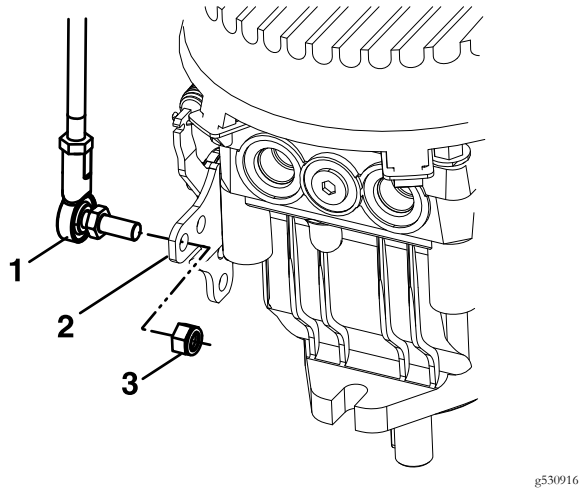

Figure 35
Right side shown

1. Motion control link
2. Pump control arm
3. Nut

- **Minimum force / Slowest speed forward and reverse:**

  Place the linkage on the outside of the pump control bracket.

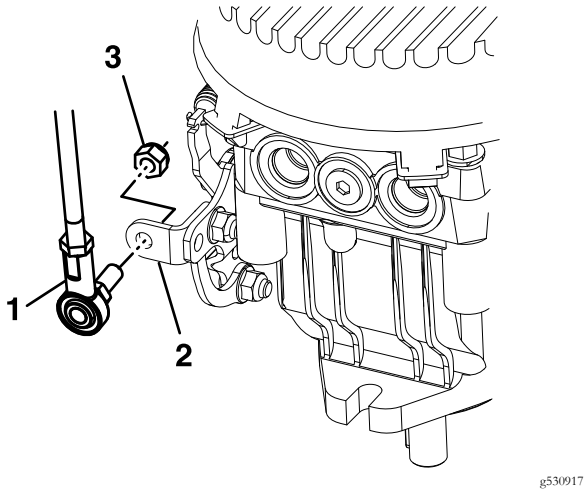

Figure 36
Right side shown

1. Motion control link
2. Pump control bracket
3. Nut

Cleaning

Cleaning and Storing Safety

- Park machine on level ground, disengage drives, set parking brake, stop engine, remove key, and disconnect spark plug wire. Wait for all moving parts to stop before leaving the operator's position. Allow the machine to cool before servicing, adjusting, fueling, cleaning, or storing.
- Clean grass and debris from the cutting unit, muffler, drives, grass catcher, and engine compartment to prevent fires.
- Allow the machine to cool before storing the machine in any enclosure. Do not store the machine or fuel container, or refuel, where there is an open flame, spark, or pilot light such as on a water heater or other appliance.

Clean Debris From Machine

Service Interval: Before each use or daily

1. Stop engine, wait for all moving parts to stop, and remove key. Engage parking brake.
2. Clean off any oil, debris, or grass build-up on the machine and cutting deck, especially under deck belt shields, around the fuel tank, around engine and exhaust area.

   Important: You can wash the machine with mild detergent and water. Do not pressure wash the machine. Avoid excessive use of water, especially near the control panel, around the engine, hydraulic pumps, and motors.

Clean Engine and Exhaust System Area

Service Interval: Before each use or daily (May be required more often in dry or dirty conditions.)

⚠ CAUTION

Excessive debris around engine cooling air intake and exhaust system area can cause engine, exhaust area, and hydraulic system to overheat which can create a fire hazard.

Clean all debris from engine and exhaust system area.

1. Stop engine, wait for all moving parts to stop, and remove key. Engage parking brake.
2. Clean all debris from rotating engine air intake screen, around engine shrouding, and exhaust system area.
3. Wipe up any excessive grease or oil around the engine and exhaust system area.
4. Clean oil coolers (if equipped) of all debris, dirt, and oil.

Remove Engine Shroud Access Panels and Clean Cooling Fins

Service Interval: Every 80 hours

1. Stop engine, wait for all moving parts to stop, and remove key. Engage parking brake.
2. Remove cooling shroud access panels from engine and clean cooling fins. Also clean dust, dirt, and oil from external surfaces of engine which can cause improper cooling.
3. Make sure cooling shroud access panels are properly reinstalled. Operating the engine without cooling shroud access panels will cause engine damage due to overheating.

Clean Grass Build-Up Under Deck

Service Interval: Before each use or daily

1. Stop engine, wait for all moving parts to stop, and remove key. Engage parking brake.
2. Raise deck to the transport (maximum cutting height) position. Lift the front of unit and support machine using jack stands or equivalent support.
3. Clean out any grass build-up from underside of deck and in discharge deflector.

Waste Disposal

Motor Oil Disposal

Engine oil and hydraulic oil are both pollutants to the environment. Dispose of used oil at a certified recycling center or according to your state and local regulations.

Battery Disposal

⚠ DANGER

Battery electrolyte contains sulfuric acid, which is poisonous and can cause severe burns. Swallowing electrolyte can be fatal or if it touches skin can cause severe burns.

- **Wear safety glasses to shield eyes, and rubber gloves to protect skin and clothing when handling electrolyte.**
- **Do Not swallow electrolyte.**
- **In the event of an accident, flush with water and call a doctor immediately.**

Federal law states that batteries should not be placed in the garbage. Management and disposal practices must be within relevant federal, state, or local laws.

If a battery is being replaced or if the unit containing the battery is no longer operating and is being scrapped, take the battery to a local certified recycling center. If no local recycling is available return the battery to any certified battery reseller.

Troubleshooting

Important: It is essential that all operator safety mechanisms be connected and in proper operating condition prior to mower use.

When a problem occurs, do not overlook the simple causes. For example: starting problems could be caused by an empty fuel tank.

The following table lists some of the common causes of trouble. Do Not attempt to service or replace major items or any items that call for special timing of adjustments procedures (such as valves, governor, etc.). Have this work done by your **Engine Service Dealer**.

Note: When disconnecting electrical connectors Do Not pull on the wires to separate the connectors.

Problem	Possible Cause	Corrective Action
Starter does not crank.	1. PTO is engaged.	1. Disengage the PTO.
	2. One of the speed control levers are not in neutral position.	2. Ensure the speed control lever is in the neutral position.
	3. Battery does not have a full charge.	3. Charge the battery. See **Check Battery Charge** and **Recommended Jump Starting Procedure** sections in Maintenance.
	4. Parking brake is disengaged.	4. Engage parking brake.
	5. Electrical connections are corroded, loose or faulty.	5. Check the electrical connections for good contact. Clean connector terminals thoroughly with electrical contact cleaner, apply dielectric grease and reconnect.
	6. Fuse is blown.	6. Replace the blown fuse.
	7. Neutral LCD indicator does not illuminate.	7. Check reed switch.
	8. Relay or switch is defective.	8. Contact an Authorized Service Dealer.
	9. Faulty battery shutdown during boost.	9. Cycle key switch off, then on. If cycling does not resolve issue, replace battery.
Engine will not start, starts hard, or fails to keep running	1. Fuel tank is empty.	1. Fill the fuel tank.
	2. The throttle and choke are not in the correct position.	2. Be sure the throttle control is midway between the "SLOW" and "FAST" positions, and the choke is in the "ON" position for a cold engine or the "OFF" position for a warm engine.
	3. Dirt in fuel filter.	3. Replace the fuel filter.
	4. Dirt, water, or stale fuel is in the fuel system.	4. Contact an Authorized Service Dealer.
	5. Air cleaner is dirty.	5. Clean or replace the air cleaner element.
	6. Electrical connections are corroded, loose or faulty.	6. Check the electrical connections for good contact. Clean connector terminals thoroughly with electrical contact cleaner, apply dielectric grease and reconnect.
	7. Relay or switch is defective.	7. Contact an Authorized Service Dealer.
	8. Faulty spark plug.	8. Clean, adjust or replace spark plug.
	9. Spark plug wire is not connected.	9. Check the spark plug wire connection.

Troubleshooting

Problem	Possible Cause	Corrective Action
Engine loses power	1. Engine load is excessive 2. Air cleaner is dirty. 3. Oil level in the crankcase is low. 4. Cooling fins and air passages for the engine are plugged. 5. Vent system filter plugged. 6. Dirt in fuel filter. 7. Dirt, water, or stale fuel is in the fuel system.	1. Reduce the ground speed. 2. Clean or replace the air cleaner element. 3. Add oil to the crankcase. 4. Remove the obstructions from the cooling fins and air passages. 5. Inspect vent filter; replace if dirty. 6. Replace the fuel filter. 7. Contact an Authorized Service Dealer.
Engine overheats	1. Engine load is excessive 2. Oil level in the crankcase is low. 3. Cooling fins and air passages for the engine are plugged.	1. Reduce the ground speed. 2. Add oil to the crankcase. 3. Remove the obstructions from the cooling fins and air passages.
Mower pulls left or right (with levers fully forward).	1. Tire pressure in drive tires not correct. 2. Tracking needs adjustment.	1. Adjust tire pressure in the drive tires. 2. Adjust the tracking by turning turnbuckle on the link the direction that the mower needs to be adjusted to. Rotate the turnbuckle in 1/4 turn increments until the mower tracks correctly.
Machine does not drive.	1. Bypass valve is not closed tight. 2. Drive or pump belt is worn, loose or broken. 3. Drive or pump belt is off a pulley.	1. Tighten the bypass valve. 2. Change the belt. 3. Change the belt.
Uneven cutting height.	1. Blade(s) not sharp. 2. Cutting blade(s) is/are bent. 3. Mower deck is not level. 4. Underside of mower is dirty. 5. Tire pressure in drive tires not correct. 6. Blade spindle bent. 7. Tips of adjacent blades are at an uneven cutting height. Blades tips should be even within 3/16 inch which is approximately one blade thickness.	1. Sharpen the blade(s). 2. Install new cutting blade(s). 3. Level mower deck from side-to-side and front-to-rear. 4. Clean the underside of the mower. 5. Adjust tire pressure in the drive tires. 6. Contact an Authorized Service Dealer. 7. Replace blades, spindles and (or) check for damage to mower deck.
Abnormal vibration	1. Cutting blade(s) is/are bent or unbalanced. 2. Blade mounting bolt is loose. 3. Engine mounting bolts are loose. 4. Loose engine pulley, idler pulley, or blade pulley. 5. Engine pulley is damaged. 6. Blade spindle is bent. 7. Belt is damaged.	1. Install new cutting blade(s). 2. Tighten the blade mounting bolt. 3. Tighten the engine mounting bolts. 4. Tighten the appropriate pulley. 5. Contact an Authorized Service Dealer. 6. Contact an Authorized Service Dealer. 7. Install new belt.
Blades do not rotate.	1. Drive belt is off pulley. 2. Deck belt is worn, loose or broken. 3. Deck belt is off pulley. 4. Broken or missing idler spring. 5. Damaged electric clutch.	1. Check belt for damage; replace if necessary. Install drive belt and check adjusting shafts and belt guides for correct position. 2. Install new deck belt. 3. Install deck pulley and check the idler pulley, idler arm and spring for correct position and function. 4. Replace the spring. 5. Contact an Authorized Service Dealer.

Problem	Possible Cause	Corrective Action
Clutch will not engage.	1. Fuse is blown.	1. Replace fuse. Check coil resistance, battery charge, charging system, and wiring connections and replace if necessary.
	2. Low voltage supply at the clutch.	2. Check coil resistance, battery charge, charging system, and wiring connections and replace if necessary.
	3. Damaged coil.	3. Replace clutch.
	4. Inadequate current supply.	4. Repair or replace clutch lead wire or electrical system. Clean connector contacts.
	5. Rotor/armature airgap is too large.	5. Remove shim or replace clutch.
Engine idles at full throttle.	1. Clutch saver relay failure.	1. Replace clutch saver relay or contact an Authorized Service Dealer.

Schematics

Electrical Logic Schematic- Kawasaki for X-Series EFI Models

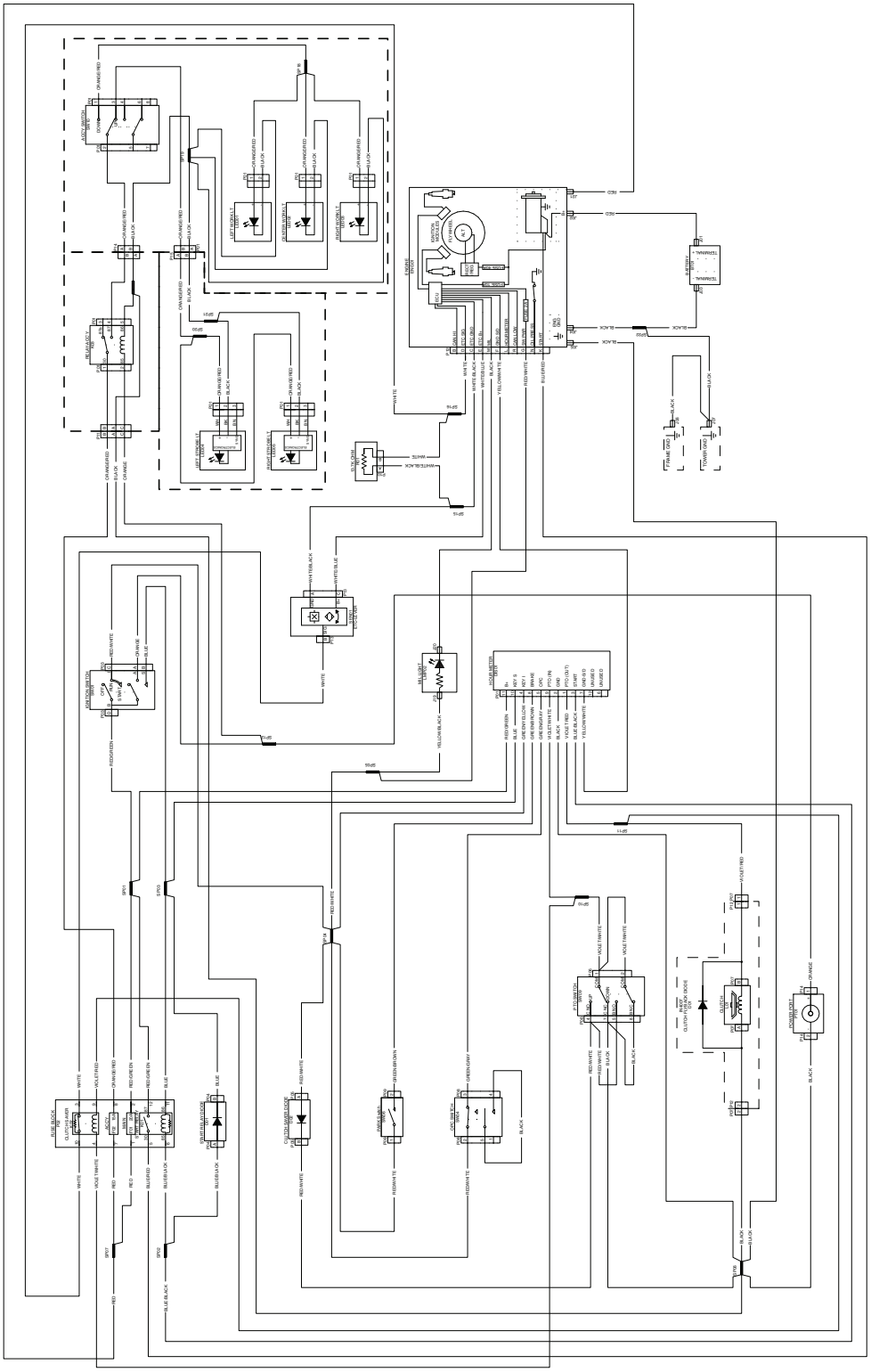

g449418

Electrical Logic Schematic- Kawasaki for X-Series Non-EFI Models

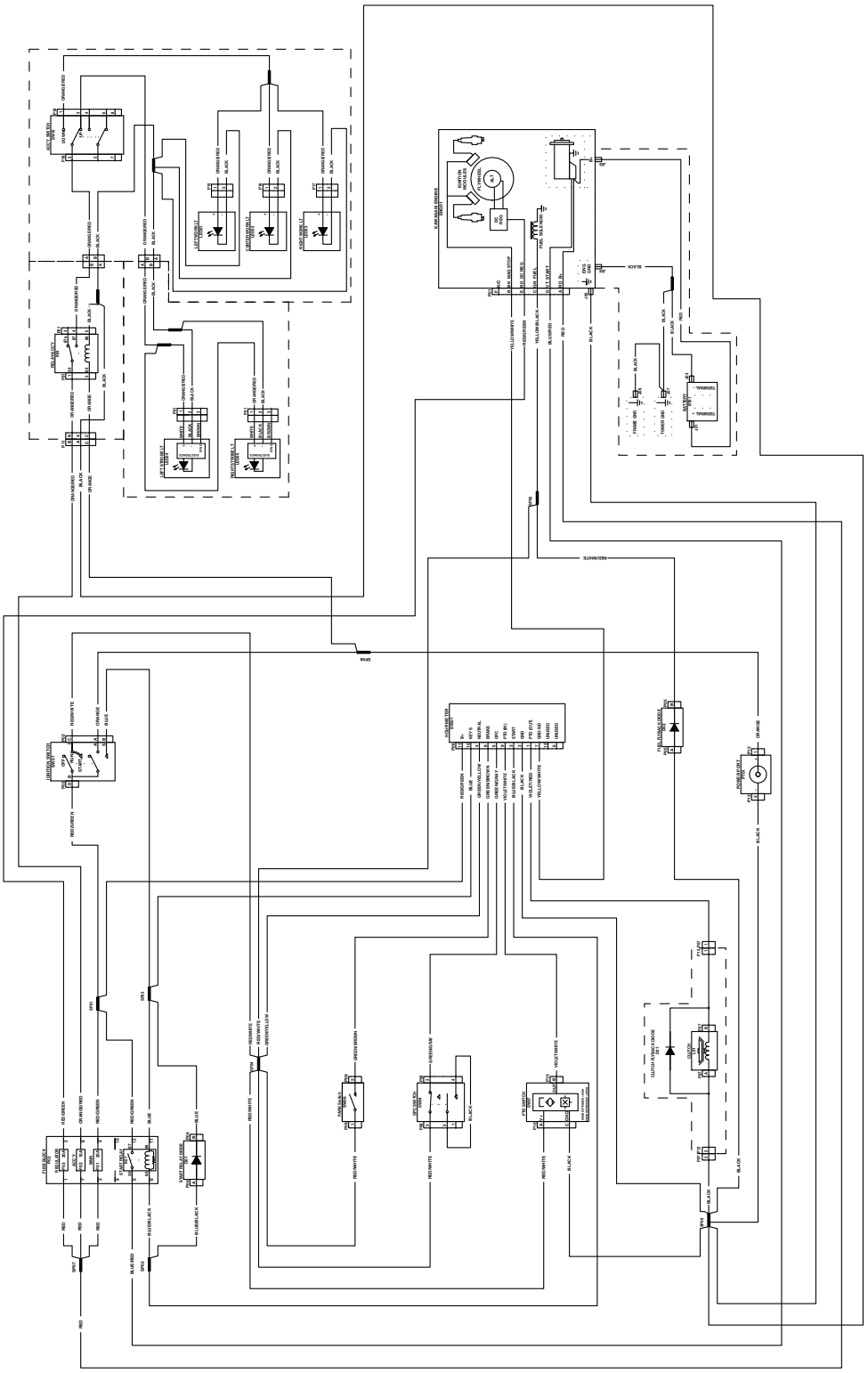

g462015

Electrical Logic Schematic- Kawasaki for S-Series Models

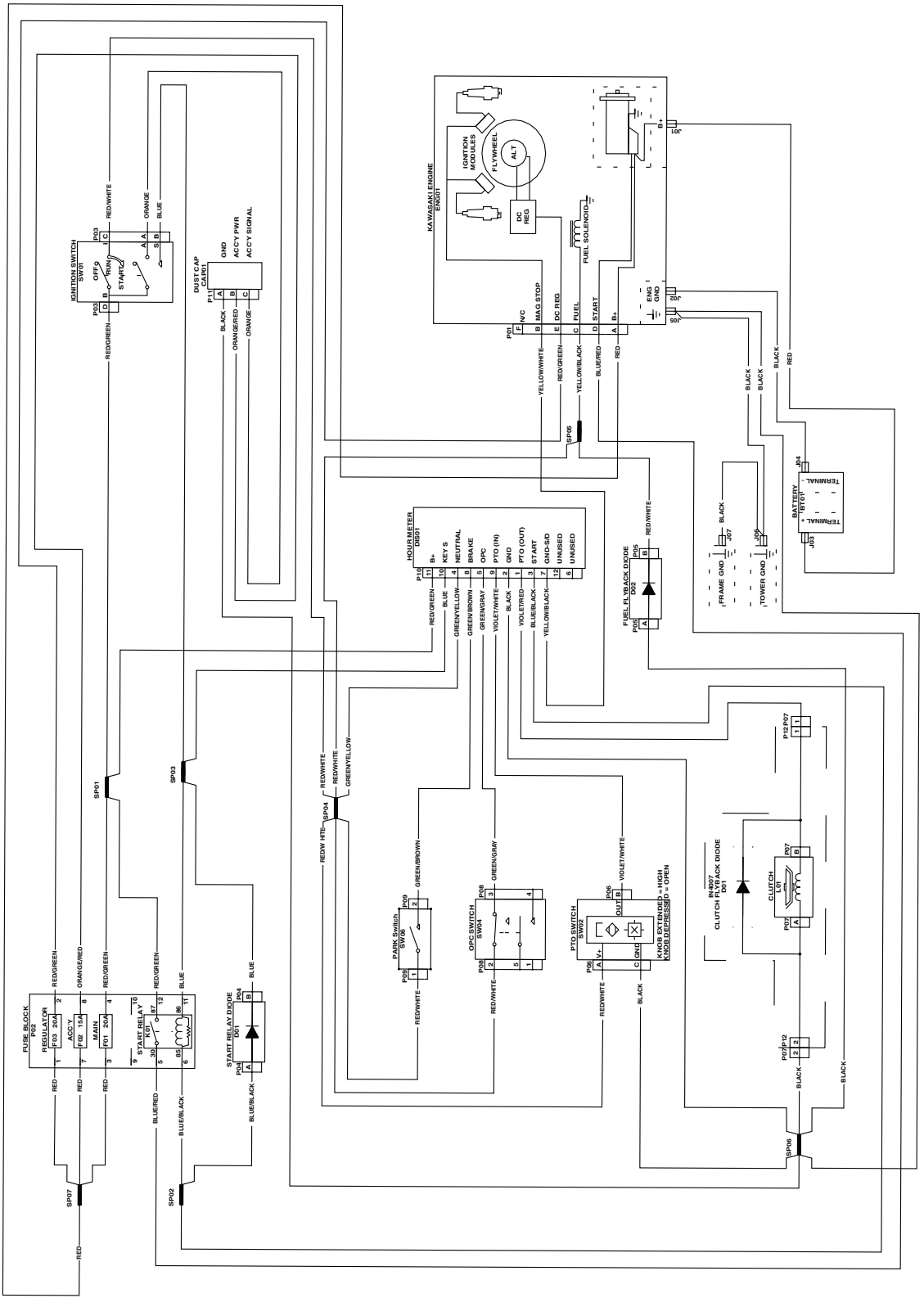

g375992

Electrical Logic Schematic- Kohler EFI

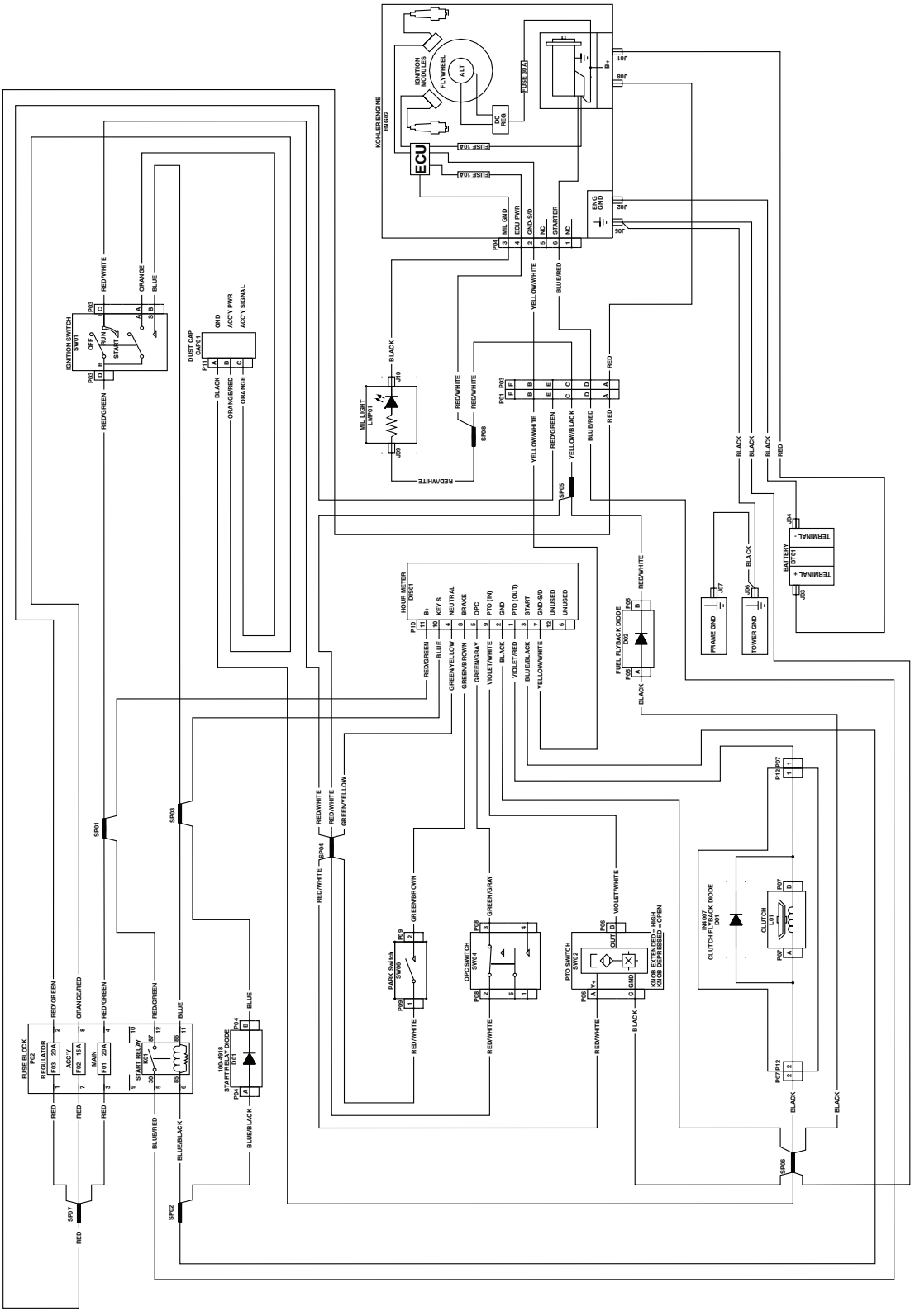

Hydraulic Diagram—X-Series Models

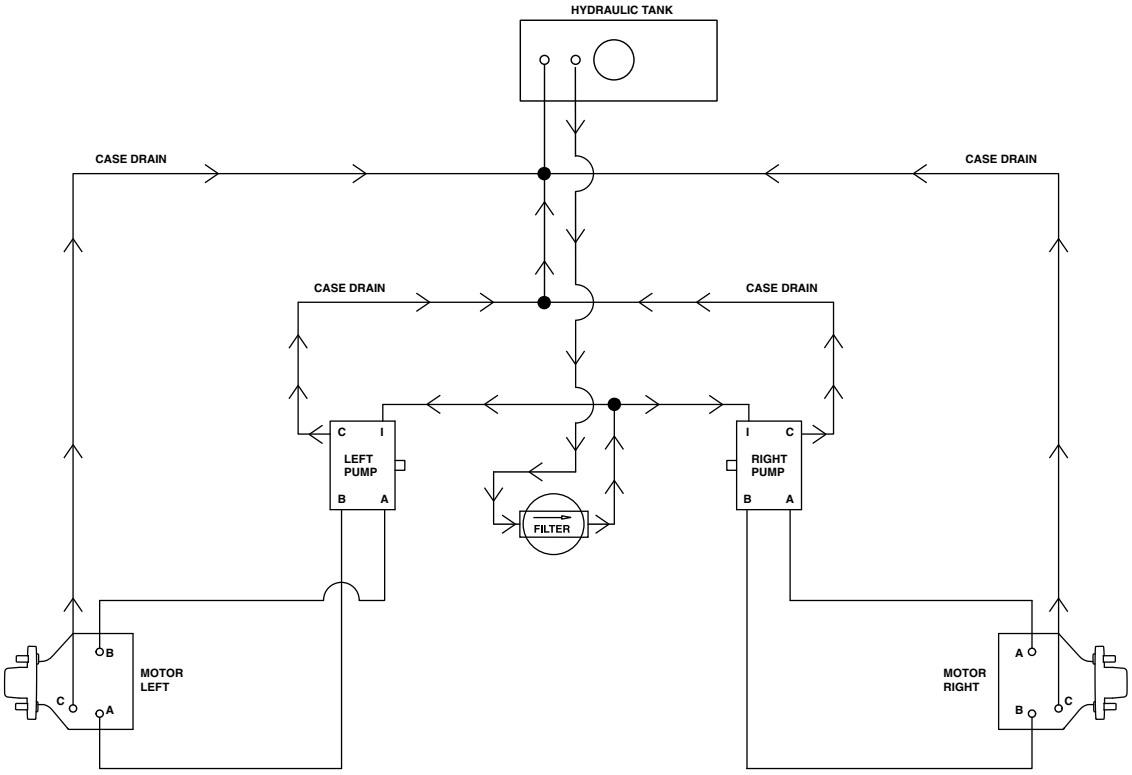

g451618

Hydraulic Diagram—S-Series Models

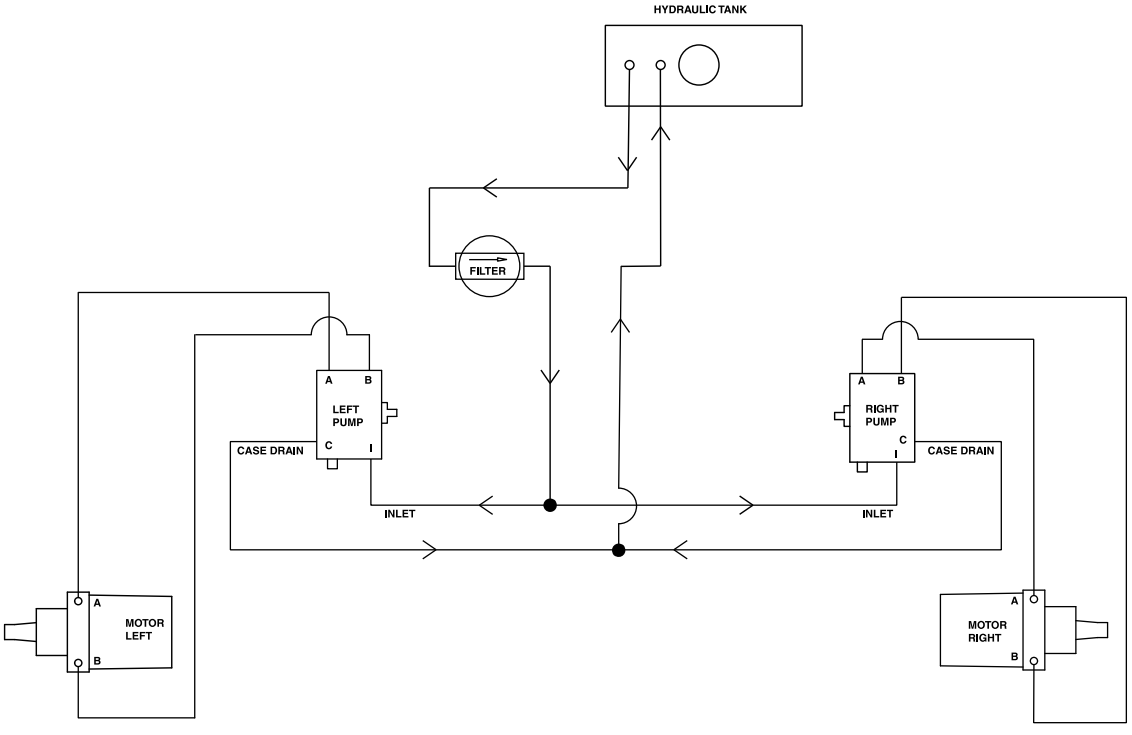

g376004

California Proposition 65 Warning Information

What is this warning?

You may see a product for sale that has a warning label like the following:



WARNING: Cancer and Reproductive Harm—www.p65Warnings.ca.gov.

What is Prop 65?

Prop 65 applies to any company operating in California, selling products in California, or manufacturing products that may be sold in or brought into California. It mandates that the Governor of California maintain and publish a list of chemicals known to cause cancer, birth defects, and/or other reproductive harm. The list, which is updated annually, includes hundreds of chemicals found in many everyday items. The purpose of Prop 65 is to inform the public about exposure to these chemicals.

Prop 65 does not ban the sale of products containing these chemicals but instead requires warnings on any product, product packaging, or literature with the product. Moreover, a Prop 65 warning does not mean that a product is in violation of any product safety standards or requirements. In fact, the California government has clarified that a Prop 65 warning "is not the same as a regulatory decision that a product is 'safe' or 'unsafe.'" Many of these chemicals have been used in everyday products for years without documented harm. For more information, go to https://oag.ca.gov/prop65/faqs-view-all.

A Prop 65 warning means that a company has either (1) evaluated the exposure and has concluded that it exceeds the "no significant risk level"; or (2) has chosen to provide a warning based on its understanding about the presence of a listed chemical without attempting to evaluate the exposure.

Does this law apply everywhere?

Prop 65 warnings are required under California law only. These warnings are seen throughout California in a wide range of settings, including but not limited to restaurants, grocery stores, hotels, schools, and hospitals, and on a wide variety of products. Additionally, some online and mail order retailers provide Prop 65 warnings on their websites or in catalogs.

How do the California warnings compare to federal limits?

Prop 65 standards are often more stringent than federal and international standards. There are various substances that require a Prop 65 warning at levels that are far lower than federal action limits. For example, the Prop 65 standard for warnings for lead is 0.5 µg/day, which is well below the federal and international standards.

Why don't all similar products carry the warning?

- Products sold in California require Prop 65 labelling while similar products sold elsewhere do not.
- A company involved in a Prop 65 lawsuit reaching a settlement may be required to use Prop 65 warnings for its products, but other companies making similar products may have no such requirement.
- The enforcement of Prop 65 is inconsistent.
- Companies may elect not to provide warnings because they conclude that they are not required to do so under Prop 65; a lack of warnings for a product does not mean that the product is free of listed chemicals at similar levels.

Why does Exmark include this warning?

Exmark has chosen to provide consumers with as much information as possible so that they can make informed decisions about the products they buy and use. Exmark provides warnings in certain cases based on its knowledge of the presence of one or more listed chemicals without evaluating the level of exposure, as not all the listed chemicals provide exposure limit requirements. While the exposure from Exmark products may be negligible or well within the "no significant risk" range, out of an abundance of caution, Exmark has elected to provide the Prop 65 warnings. Moreover, if Exmark does not provide these warnings, it could be sued by the State of California or by private parties seeking to enforce Prop 65 and subject to substantial penalties.

Notes:

Notes:

Service Record

Date:	Description of Work Done:	Service Done By:

MAXIMIZE THE PERFORMANCE OF YOUR EXMARK MACHINE.



EXMARK® PREMIUM ENGINE OIL

Exmark now offers a family of engine oil viscosities to perform well in any environment. Each viscosity has the same synthetic formulation to give you what you need in punishing conditions. We designed each grade to the highest quality, making it ideal even for diesel applications. Coupled with Exmark Premium Fuel Treatment, we have the performance products to make your machine hum.

EXMARK PREMIUM ENGINE OIL SAE 30/10W-30

- Meets zero shear requirements of a straight grade SAE 30 as well as the cold temp properties of a 10W-30.
- Most versatile oil in the industry.
- Superior corrosion protection over conventional oil - even in corrosive, humid environments.

EXMARK PREMIUM ENGINE OIL SAE 10W-50

- Full synthetic formulation gives you peak performance. Don't settle for less.
- Wide span multi-grade combines easy starting in cold weather with maximum protection in high temperature operation.
- Reduce friction & wear over standard mineral formulations.

EXMARK PREMIUM ENGINE OIL UTV FORMULATION

- 4-cycle high-temp formulation.
- Heavier viscosity, full synthetic, perfect for your UTV.

EXMARK PREMIUM ENGINE OIL SAE 20W-50

- Perfect for your big block engine, or any application in severe service.
- Same full synthetic formulation as all other Exmark Premium viscosities.
- Also effective for use in severe service small block engines.

EXMARK PREMIUM ENGINE OIL SAE 0W-40

- The perfect choice for when the weather turns cold or unpredictable, and your Exmark UTV has to perform.
- Commercial quality for severe service.
- Advanced additive package helps prevent corrosion from long-term storage.

EXMARK PREMIUM UTV EXTREME CONDITIONS GEAR OIL

- SAE 80W-90, designed to keep your UTV performing at its peak.
- Shear stable, hypoid gear lube.
- Includes a premium additive system to combat wear, oxidation, rust & corrosion.

Available from your local Exmark dealer. Find your closest dealer at exmark.com

EXMARK ACCESSORIES AND OPTIONS*

MID-MOUNT RIDING ACCESSORIES AND OPTIONS

CUSTOM RIDE SEAT SUSPENSION SYSTEM
FULL SUSPENSION SEAT
DECK LIFT ASSIST KIT
HITCH KIT
LIGHT KIT
12V POWER PORT
MICRO-MULCH SYSTEM
OPERATOR CONTROLLED DISCHARGE
SUN SHADE
TRASH CONTAINER
TURF STRIPER
ULTRA VAC COLLECTION SYSTEM
ULTRA VAC QUICK DISPOSAL SYSTEM

OUT-FRONT RIDING ACCESSORIES AND OPTIONS

CUSTOM RIDE SEAT SUSPENSION SYSTEM
DUAL-TAIL WHEEL
FLOOR PAN EXTENDER
HITCH KIT
LIGHT KIT
MICRO-MULCH SYSTEM
ROLL OVER PROTECTION SYSTEM (ROPS)
SNOW BLADE
SNOWBLOWER
SUN SHADE
TRASH CONTAINER
ULTRA VAC COLLECTION SYSTEM
ULTRA VAC QUICK DISPOSAL SYSTEM
WEATHER CAB

WALK-BEHIND ACCESSORIES AND OPTIONS

GRASS CATCHER
MICRO-MULCH SYSTEM
TURF STRIPER
STANDON

*Some accessories and options not available for some models.

Place Model No. and Serial No. Label Here (Included in the Literature Pack) or Fill in Below

Model No. _____

Serial No. _____

Date Purchased _____

Engine Model No. and Spec. No. _____

Engine Serial No. (E/No) _____

©2025 Exmark Mfg. Co., Inc.
All Rights Reserved

415 Industrial Row
Beatrice, NE 68310
(402) 223-6300

Part No. 4507-434 Rev. B
Printed in the USA