Parrot Uncle

F6028BK
F6028CR

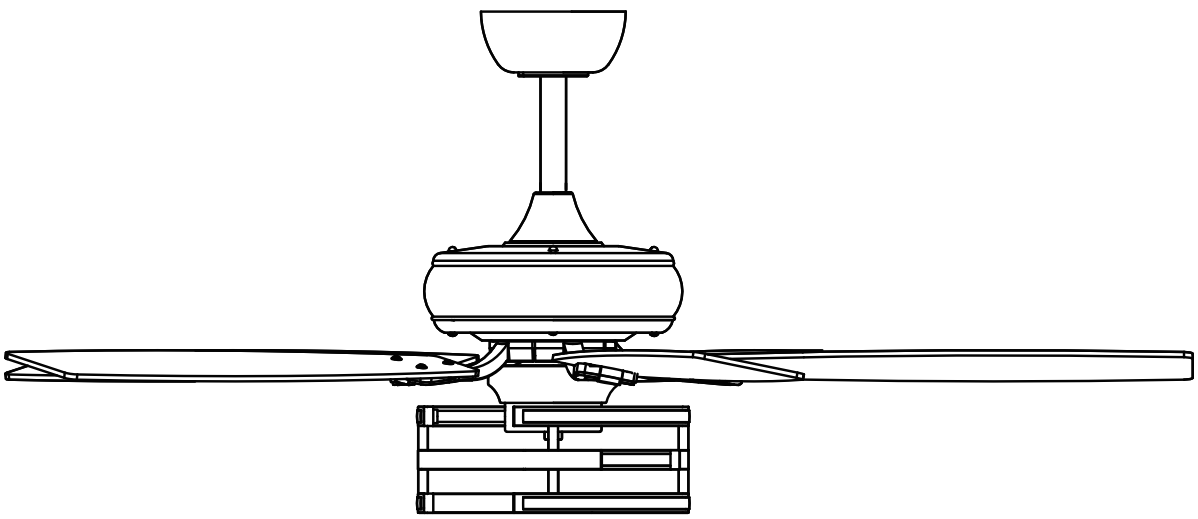

English

www.parrotuncle.com

Parrot Uncle

F6028BK
F6028CR

Installation & Operating Instructions for the
Parrot uncle Owner's Installation ,Manual

WARNING: SHUT POWER OFF AT FUSE OR CIRCUIT BREAKER

Sicherheit information

1. To reduce the risk of an electrical blow, electricity on the protective switch or the safety box went out before starting.
2. All wiring must correspond to the NASI/NFPA 70-1999 National Electric Code and local electrical regulations. The electrical installation must be carried out by a qualified and approved electrician.
3. The connection box and support construction must be assembled safely and 35 pounds (15.9 kilos) must be able to transport reliably. Use only output boxes listed with labeling

   "Accepted for fans with a weight of £ 35 (15.9 kilos) or less."

4. The fan must be installed with a minimum distance of 2.1 m (7 feet) from the posterior edge of the blades to the floor. Make sure that there is a space of at least 30 cm between the fan's blades and any wall or other obstacle with which they could collide.It is important to note that the greater the distance,the more efficient the airflow would be.

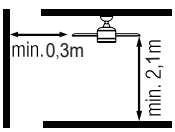

5. Do not operate the reverse switch if the fan blades are moving. You have to turn off the fan and stop the blades before reverse the direction of the blades.
6. Do not place objects on the road to blades.
7. To avoid lesions or damage to the fan and other objects, be careful if you work on the fan or clean it.
8. Electrical diagrams only serve as a reference. The lighting rates that are not delivered with the fan must be listed and marked with the valve model that will be installed for use. The switches must be general use switches UL. Take into account the instructions for the appropriate installation included in the lighting rates and the switches.
9. After the electrical connections have been made, the size staircase must be turned up and carefully push to the plug box. The cables must be distributed in such a way that the ground connected driver and the device head are next to the socket.

   All fixing screws must be verified before installation and, if necessary, followed.

WARNING: To reduce the risk of injury, blade brackets cannot be folded during installation or after installation. Do not put any object on the path of blades.

WARNING: Remove rubber motor attacks at the bottom of the fan before mounting the blades or try the motor.

WARNING: To avoid the risk of a fire or an electrical blow, this fan should not be used with a semiconductor speed controller.

WARNING: To avoid a possible electric shock, turn off the current in the main security box before wiring. If you feel that you do not have enough knowledge or experience in electrical wiring, communicate with a license electrician.

WARNING: Electrical diagrams only serve as a reference. The optional use of an lighting rate must be on the list and marked with this fan for use.

WARNING: To reduce the risk of fires, electrical discharges or injuries, assemble the device in a socket that with the inscription accepted for fans with a weight of £ 35) or less. It is marked and use the screws supplied with the plug.

TECHNICAL INFORMATION

SKU	Nominal voltage	Nominal output (motor)	light
F6028BK	110-120V AC	29W	21W 3000/4500/6500K, dimmable
F6028CR	110-120V AC	29W	21W 3000/4500/6500K, dimmable

Parrot Uncle

F6028BK
F6028CR

Installation & Operating Instructions for the
Parrot uncle Owner's Installation ,Manual

WARNING: SHUT POWER OFF AT FUSE OR CIRCUIT BREAKER

- Plastic wire nut (3PCS)
- Blade screw (16PCS)
- Washer (16PCS)
- Balancing sticker (2PCS)
- Balancing clip (1PC)

- Mounting screw(2PCS)
- Washer(2PCS)

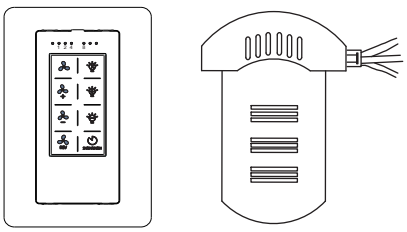

Remote control (1 PC)

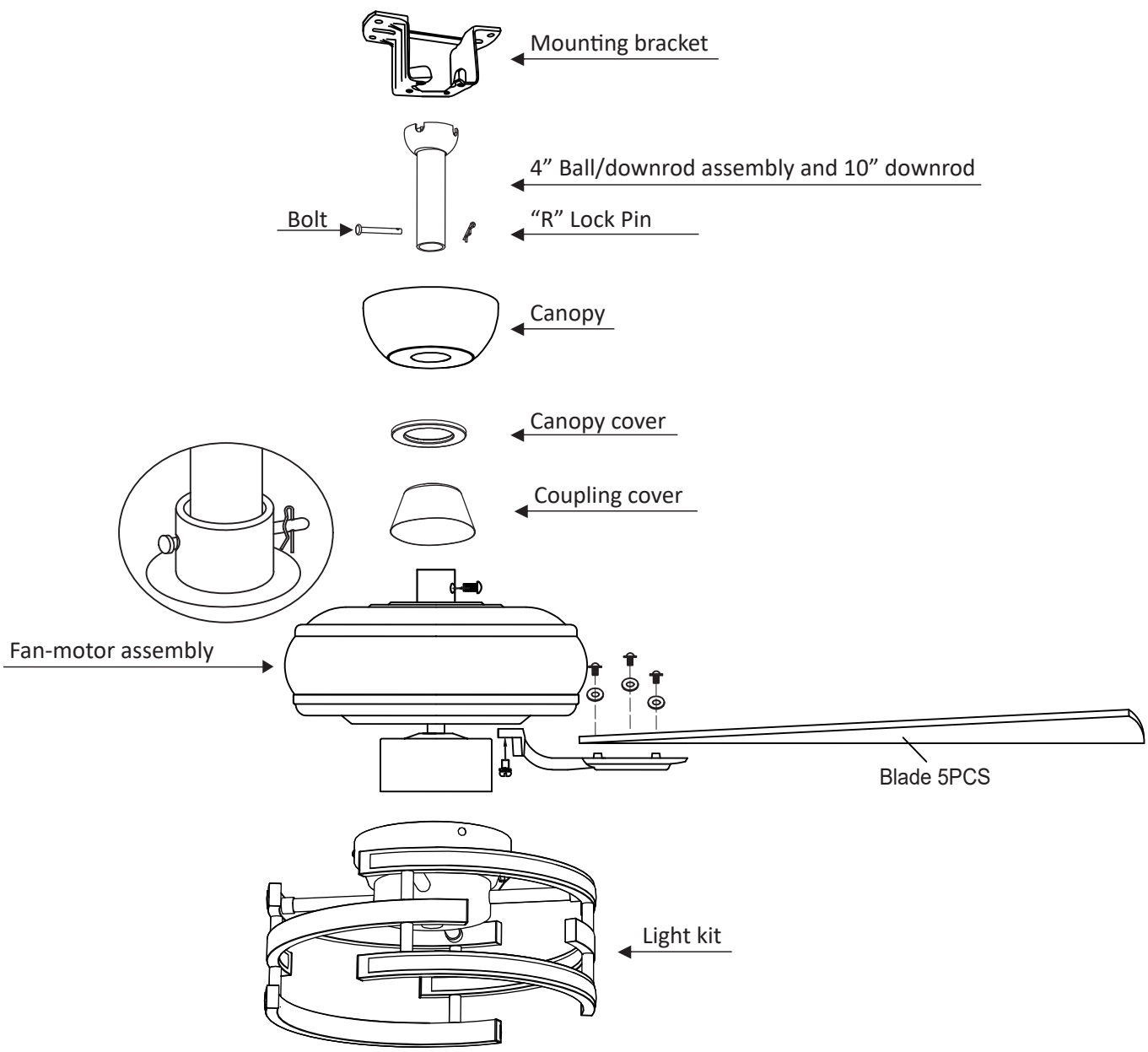

Pls check whether above accessories are completed or not?Yes,and install.

Parrot Uncle

F6028BK
F6028CR

Installation & Operating Instructions for the Parrot uncle Owner's Installation ,Manual

WARNING: SHUT POWER OFF AT FUSE OR CIRCUIT BREAKER

1

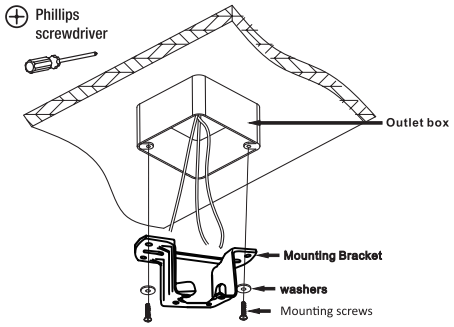

Warning:Failure to disconnect power supply prior to installation may result in serious injury.

For safety and best operating results,recommend you have a qualified electrician install this fan.

Secure mounting bracket to outlet box by tightening mounting screws & washers.

The ceiling fan must be installed in a location with a minimum of 300mm spacing from the tip of the blade to the nearest objects or walls.Secure the mounting bracket to the ceiling joist or structure that is capable of carrying a load of at least 15.9kgs,with two long screws provided.

Ensure at least 30mm of the screws is threaded into the support.

Note:For ease of wiring feed house wires through mounting bracket.

2

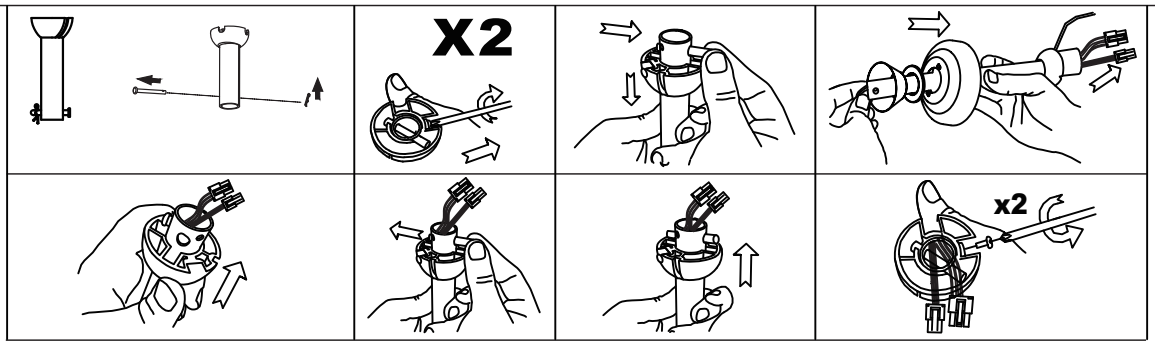

Remove the bolt,"R" lock pin and 2 set screws from the downrod and then take down the hanger ball.

Feed the motor wire plug up through the inside of the downrod,then tighten the 2 set screws for hanger ball firmly.

3

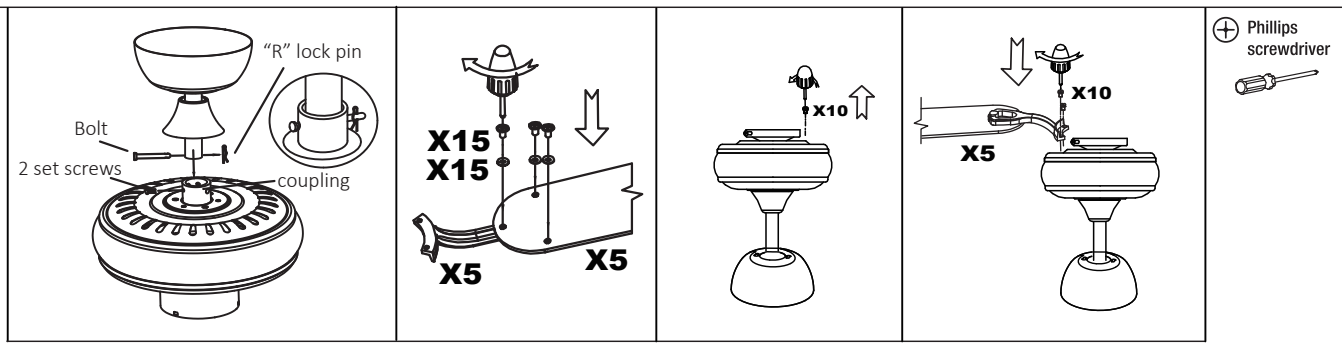

Insert the downrod into the coupling.

Gently push the bolt through the holes alighed with the base of the coupling and downrod.

Insert "R" lock pin into bolt and secure downrod with 2 set screws.

CAUTION: DO NOT force the bolt.Gently wiggle and rotate it until glides through both holes.

Attach 5 blades to 5 blade brackets using blade screws and washers provided. Tighten screws securely.

Install 5 blade brackets assembly to motor using the pre-installed screws. Tighten screws securely.

4

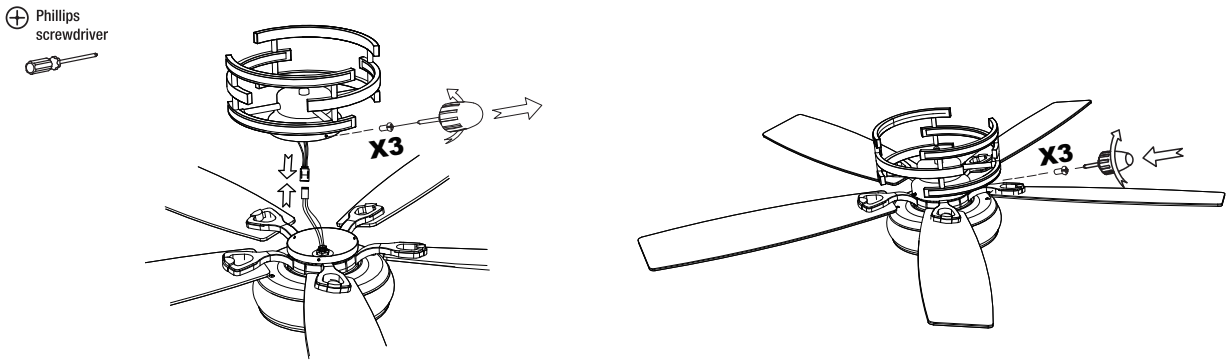

Remove 3 screws from the light kit, and then connect 2 connectors.

Install the light kit to the motor with 3 screws.

Parrot Uncle

F6028BK
F6028CR

Installation & Operating Instructions for the
Parrot uncle Owner's Installation ,Manual

WARNING: SHUT POWER OFF AT FUSE OR CIRCUIT BREAKER

5

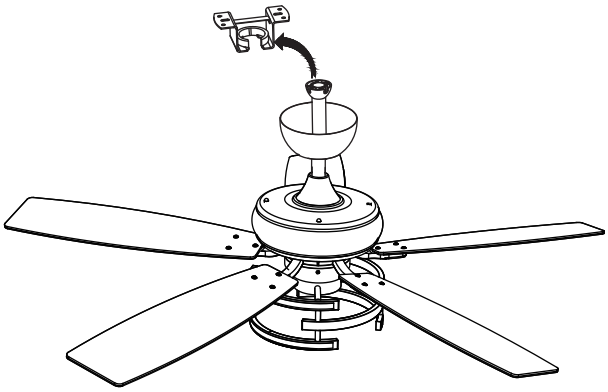

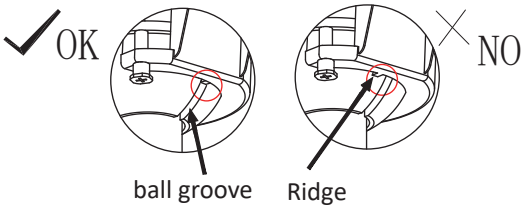

Hang the fan into mounting bracket.
Aligh ball groove on hanger ball with ridge on hanger bracket.
Ensure hanger ball sitting into hanger bracket correctly.
If fan doesnot sit properly,hold the downrod and twist it until fan has been secured into hanger bracket.

WARNING: Failure to aligh ball groove with ridge may result in serious injury.

6

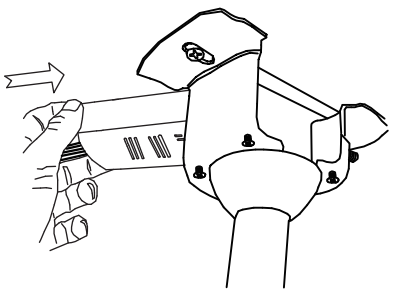

WARNING: To avoid possible electrical shock, be sure electricity is turned off at the main fuse box before wiring.

Insert the receiver into the mounting bracket with the flat side of the receiver facing the ceiling.
Make the wire connection between the Fan and power supply.
Make sure all connections are secured.

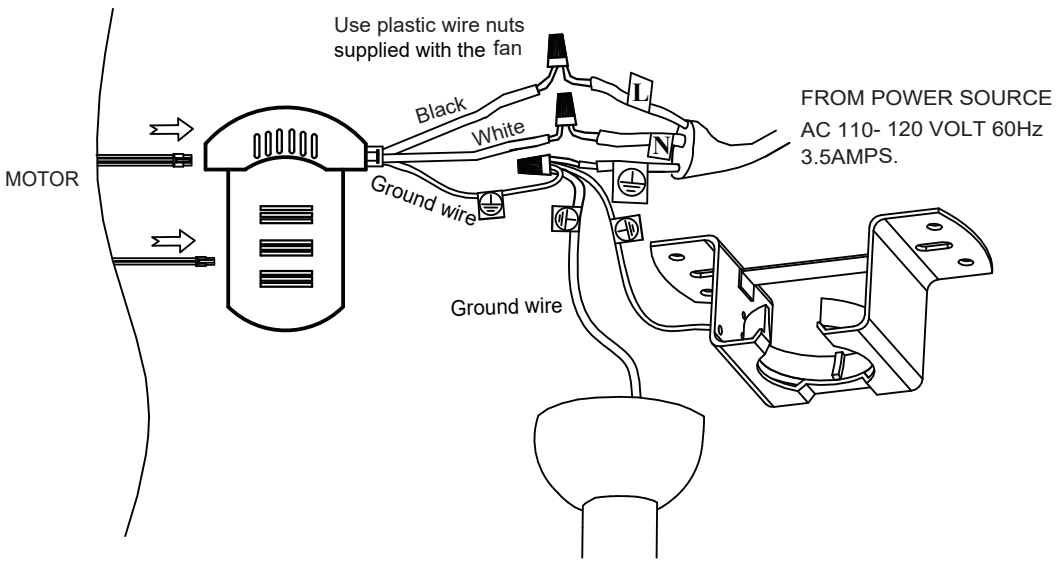

7

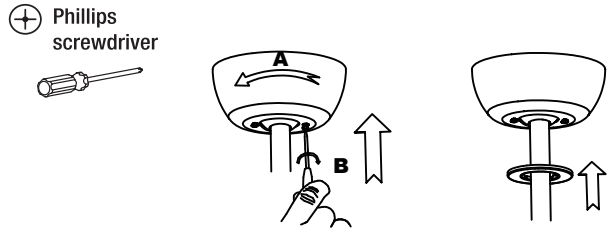

Slide the canopy up to ceiling and align the keyhole slots on the canopy with the 2 preassembled screws on the hanger bracket.
Twist clockwise until it locks. Tighten two screws to fix the canopy securely.
Clip the canopy cover in to secure it onto the canopy.

Parrot Uncle

F6028BK

F6028CR

Installation & Operating Instructions for the
Parrot uncle Owner's Installation ,Manual

WARNING: SHUT POWER OFF AT FUSE OR CIRCUIT BREAKER

Remote controller
GENERAL INFORMATION

1.INSTALLING RECEIVER IN CEILING FAN

A. Safety precautions:

WARNING: HIGH VOLTAGE! Disconnect power by removing fuse or switching off circuit breaker.

Electrical wire must meet all local and national electrical code requirements.

B. Electrical rating: 110/120V 50/60Hz

Otherwise power can cause serious injury or death.

2.OPERATING TRANSMITTER:

A. Install CR2032 3 volt battery.
(To prevent damage to transmitter, remove the battery if not used for a long time).

B. Store the transmitter away from excessive heat or humidity.

C. Operating the buttons on the panel of the transmitter.

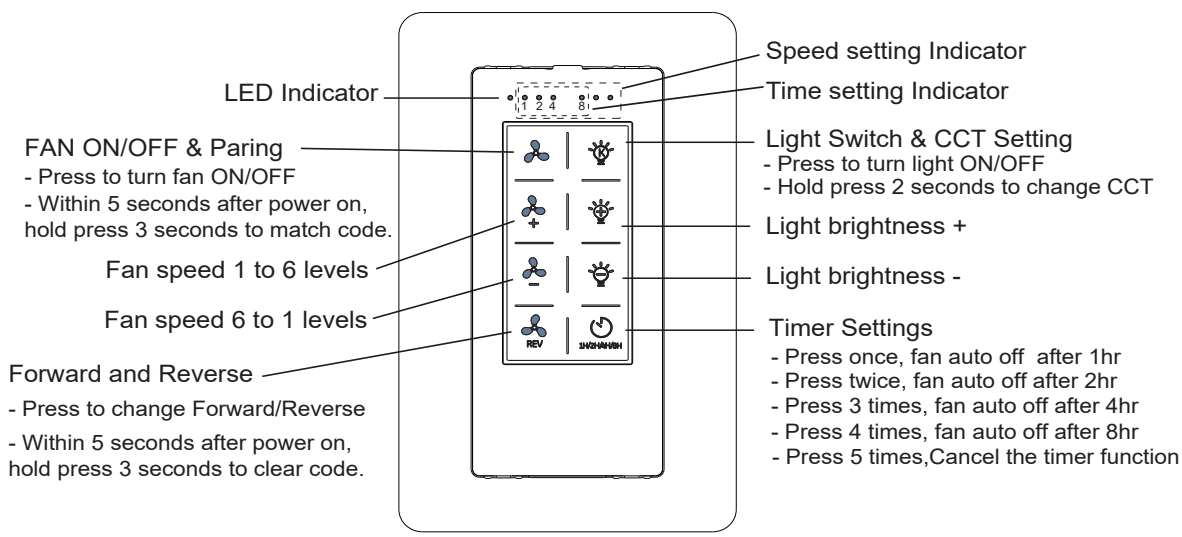

D. Setting the codes on the receiver:

Learning code matching mode is used between REMOTE CONTROL and receiver.
Turn on the supply power within 5 seconds and press the REMOTE CONTROL“FAN ON/OFF” button for 3 seconds, it can load normally after hearing a long sound “bee”, which means learning successfully and it can works normally.

(PS: Learning mode is not accepted after turn “ON” the supply power for 5 seconds)

Parrot Uncle

F6028BK
F6028CR

Installation & Operating Instructions for the
Parrot uncle Owner's Installation ,Manual

WARNING: SHUT POWER OFF AT FUSE OR CIRCUIT BREAKER

size of product

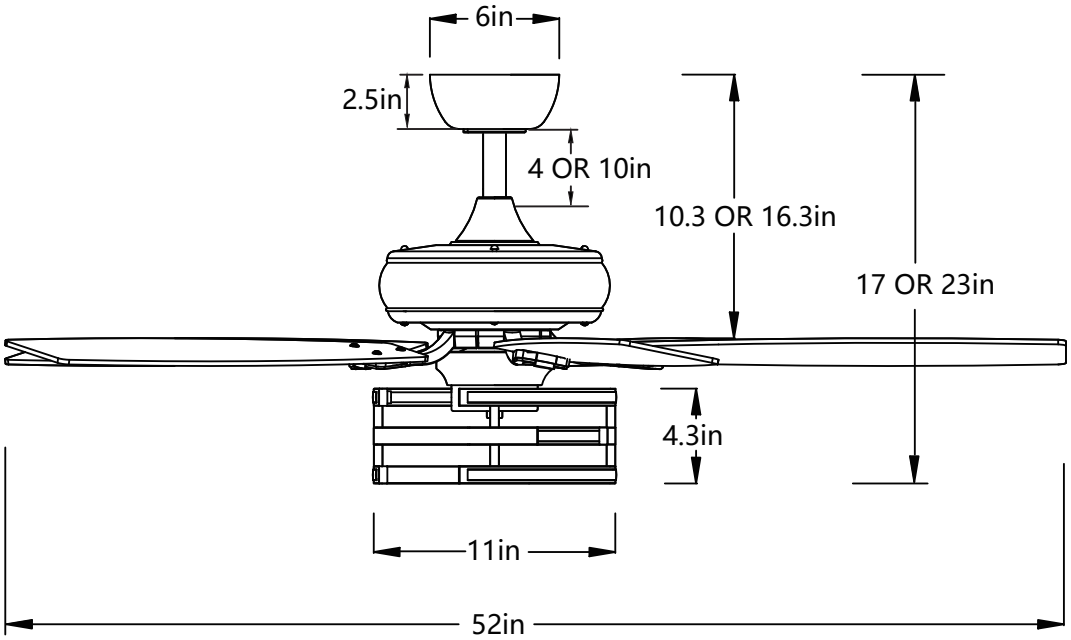

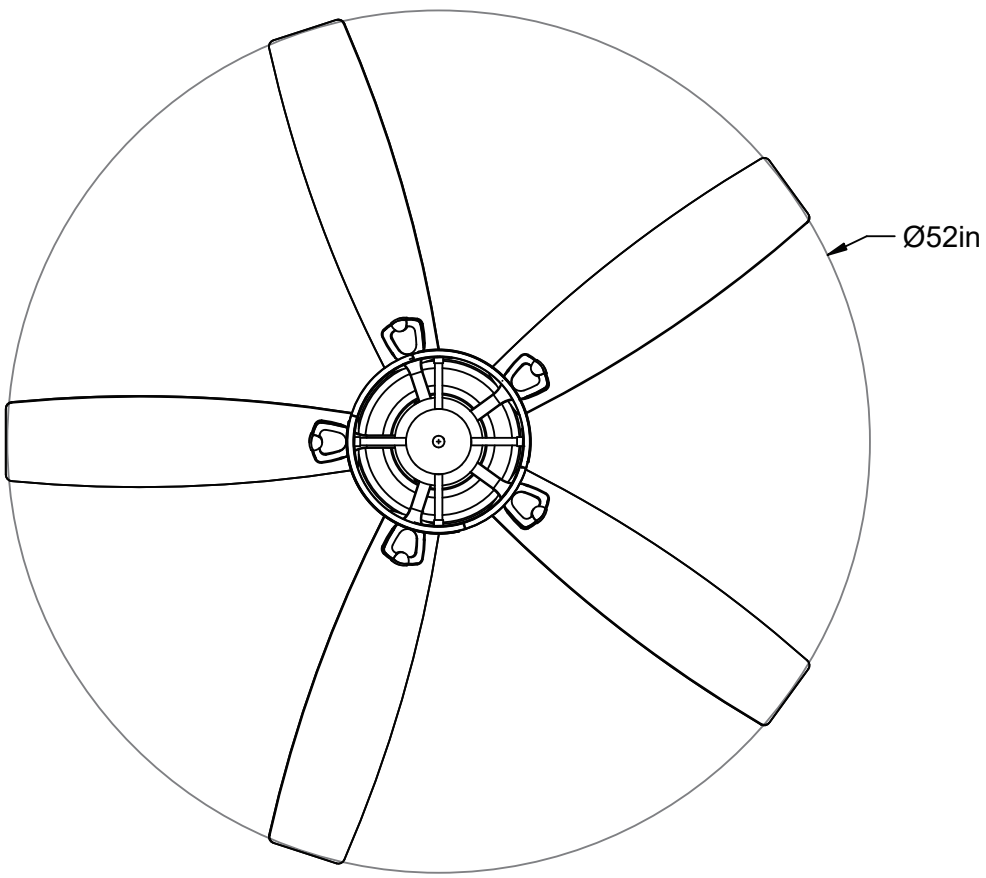

Parrot Uncle

F6028BK
F6028CR

Installation & Operating Instructions for the
Parrot uncle Owner's Installation ,Manual

WARNING: SHUT POWER OFF AT FUSE OR CIRCUIT BREAKER

AFTER INSTALLATION

WOBBLE”

The fan blades have been adjusted in the factory to minimize any wobble

NOTE:CEILING FANS TEND TO MOVE DURING OPERATION DUE TO THE FACT THAT THEY ARE MOUNTED ON A RUBBER CROMMET. IF THE FAN WAS MOUNTED RIGIDLY TO THE CEILING, IT WOULD CAUSE EXCESS VIBRATION. MOVEMENT OF A FEW CENTIMENTERS IS QUITE ACCEPTABLE AND DOES NOT SUGGEST ANY PROBLEM

TO REDUCE THE FAN WOBBLE: PLEASE CHECK THAT ALL SCREWS WHICH SECURED THE MOUNTING BRACKET AND DOWNROD ARE SECURE.

BALANCING A WOBBLING CEILING FAN:

1.Check that all blade and blade arm screws are secure.

2.Most fan wobbling problems are caused when blade levels are unequal. Check this level by selecting a point on the ceiling above the tip of one of the blades. Measure this distance.Rotate the fan until the next blade is positioned for measurement. Repeat for each blade. The distance deviation should be equal within 1/8"(0.32cm).

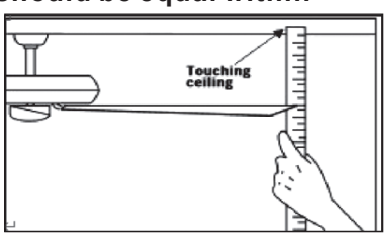

3.If the blade wobble is still noticeable, interchanging two adjacent (side by side) blades can redistribute the weight and possibly result in smoother operation. WARNING: TO REDUCE THE RISK OF PERSONAL INJURY, DO NOT BEND THE BLADE ARM WHILE INSTALLING, BALANCING THE BLADES, OR CLEANING THE FAN. DO NOT INSERT FOREIGN OBJECTS BETWEEN ROTATING FAN BLADES.

NOISE

When it is quiet(especially at night) you may hear occasional small noises. This is normal. Please allow a 24-hour “breaking-in” period, most noises associated with a new fan disappear during the time.

CARE AND CLEANING

1.Periodic cleaning of your ceiling fan is the only maintenance required. Use a soft brush or lint free cloth to avoid scratching the paint finish. Please make sure to turn off electricity power before you clean your fan

2.Do not use water when cleaning your ceiling fan. It could damage the motor or the blades and create the possibility of an electrical shock.

3.Motor has permanently lubricated ball bearing. No need to oil

NOTE: MAKE SURE THE POWER IS OFF AT THE ELECTRICAL PANEL BOX BEFORE YOU ATTEMPT ANY CLEANING OR REPAIRS.



Parrot Uncle