Midea

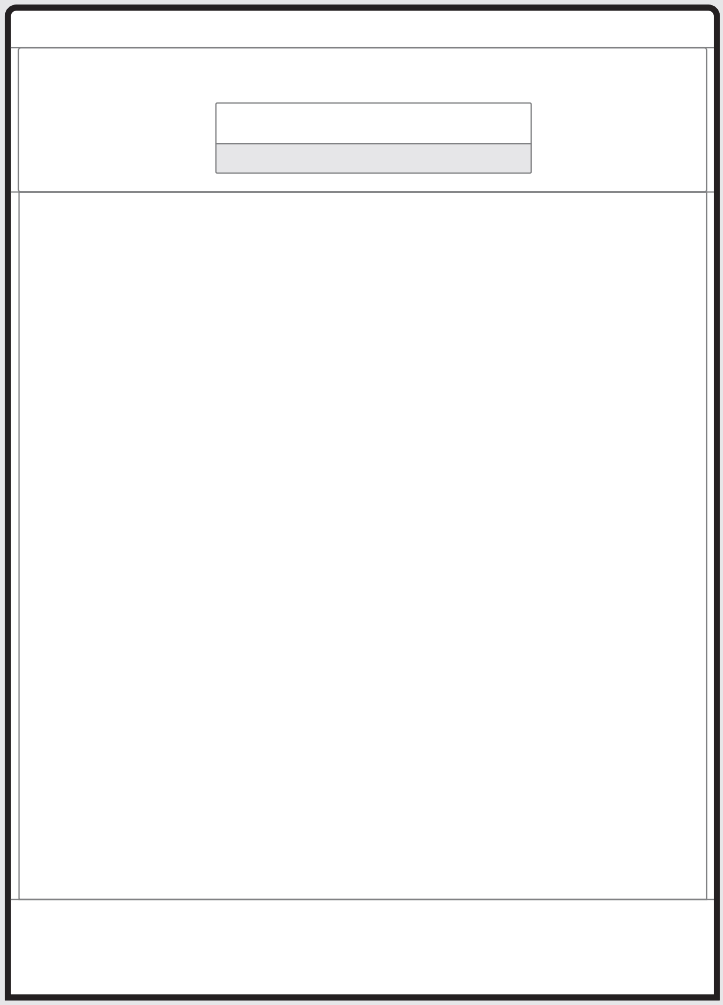

Dish Washer

SmartHome

Download the app
& activate product

USER MANUAL

MDWEF1433G(SS)-WUG-UK

Warning notices: Before using this product, please read this manual carefully and keep it for future reference.
The design and specifications are subject to change without prior notice for product improvement.
Consult with your dealer or manufacturer for details.
The diagram above is just for reference. Please take the appearance of the actual product as the standard.

THANK YOU LETTER

Thank you for choosing Midea! Before using your new Midea product, please read this manual thoroughly to ensure that you know how to operate the features and functions that your new appliance offers in a safe way.

CONTENTS

THANK YOU LETTER 01

SAFETY INSTRUCTIONS 02

SPECIFICATIONS 08

PRODUCT OVERVIEW 10

QUICK START GUIDE 11

PRODUCT INSTALLATION 12

OPERATION INSTRUCTIONS 16

APP SETUP AND OPERATION 34

CLEANING AND MAINTENANCE 36

TROUBLESHOOTING 39

TRADEMARKS, COPYRIGHTS AND LEGAL STATEMENT 43

DISPOSAL AND RECYCLING 44

DATA PROTECTION NOTICE 45

DECLARATION OF CONFORMITY 46

SAFETY INSTRUCTIONS

Intended Use

- The following safety guidelines are intended to prevent unforeseen risks or damage from unsafe or incorrect operation of the appliance. Please check the packaging and appliance on arrival to make sure everything is intact to ensure safe operation. If you find any damage, please contact the retailer or dealer.
- Please note modifications or alterations to the appliance are not allowed for your safety concern. Unintended use may cause hazards and loss of warranty claims.

Explanation of Symbols

	Danger This symbol indicates that there are dangers to the life and health of persons due to extremely flammable gas.
	Warning of electrical voltage This symbol indicates that there is a danger to life and health of persons due to voltage.
	Warning The signal word indicates a hazard with a medium level of risk which, if not avoided, may result in death or serious injury.

⚠	**Caution** The signal word indicates a hazard with a low degree of risk which, if not avoided, may result in minor or moderate injury.
💡	**Attention** The signal word indicates important information (e.g. damage to property), but not danger.
🔧	**Observe instructions** This symbol indicates that a service technician should only operate and maintain this appliance in accordance with the operating instructions.

Read these operating instructions carefully and attentively before using/commissioning the unit and keep them in the immediate vicinity of the installation site or unit for later use!

⚠ DANGER: Risk of Fire/Flammable materials

- **When using your dishwasher, follow the precautions listed below:**
- Installation and repair can only be carried out by a qualified technician.
- This appliance is intended to be used in household and similar applications such as:
  -staff kitchen areas in shops, offices and other working environments;
  -farm houses;
  -by clients in hotels, motels and other residential type environments;
  -bed and breakfast type environments.
- This appliance can be used by children aged from 8 years and above and persons with reduced physical, sensory or mental capabilities or lack of experience and knowledge if they have been given supervision or instruction concerning use of the appliance in a safe way and understand the hazards involved.
- Children shall not play with the appliance. Cleaning and user maintenance shall not be done by children without supervision. (For EN60335-1)
- This appliance is not intended for use by persons (including children) with reduced physical, sensory or mental capabilities, or lack of experience and knowledge, unless they have been given supervision or instruction concerning use of the appliance by a person responsible for their safety. (For IEC60335-1)
- Packaging material could be dangerous for children!
- Children should be supervised to ensure that they do not play with the appliance.
  This appliance is for indoor household use only.

To protect against the risk of electrical shock, do not immerse the unit, cord or plug in water or other liquid.

- Please unplug before cleaning and maintenance the appliance. Use a soft cloth moisten with mild soap, and then use a dry cloth to wipe it again.
- If the supply cord is damaged, it must be replaced by the manufacturer or its service agent or a similarly qualified person in order to avoid a hazard.

⚠ Earthing Instructions

- This appliance must be earthed. In the event of a malfunction or breakdown, earthing will reduce the risk of an electric shock by providing a path of least resistance of electric current. This appliance is equipped with an earthing conductor plug.
- The plug must be plugged into an appropriate outlet that is installed and earthed in accordance with all local codes and ordinances.
- Improper connection of the equipment-earthing conductor can result in the risk of an electric shock.
- Check with a qualified electrician or service representative if you are in doubt whether the appliance is properly grounded.
- Do not modify the plug provided with the appliance if it does not fit the outlet.
- Have a proper outlet installed by a qualified electrician.
- Do not abuse, sit on, or stand on the door or dish rack of the dishwasher.
- Do not operate your dishwasher unless all enclosure panels are properly in place.
- Open the door very carefully if the dishwasher is

operating, there is a risk of water squirting out.

- Do not place any heavy objects on or stand on the door when it is open. The appliance could tip forward.
- When loading items to be washed:
  1) Locate sharp items so that they are not likely to damage the door seal;
  2) Warning: Knives and other utensils with sharp points must be loaded in the basket with their points facing down or placed in a horizontal position.
- Some dishwasher detergents are strongly alkaline. They can be extremely dangerous if swallowed. Avoid contact with the skin and eyes and keep children away from the dishwasher when the door is open.
- Check that there are no detergent residues after completion of the wash cycle.
- Do not wash plastic items unless they are marked “dishwasher safe” or the equivalent.
- For unmarked plastic items not so marked, check the manufacturer's recommendations.
- Use only detergent and rinse agents recommended for use in an automatic dishwasher.
- Never use soap, laundry detergent, or hand washing detergent in your dishwasher.
- The door should not be left open, since this could increase the risk of tripping.
- During installation, the power supply must not be excessively or dangerously bent or flattened.
- Do not tamper with controls.
- The appliance needs to be connected to the main water valve using new hose sets. Old sets should not be reused.

- To save energy, in stand by mode, the appliance will switch of automatically after 15 minutes without any user interaction.
- The maximum number of place settings to be washed is 14.
- The maximum permissible inlet water pressure is 1MPa.
- The minimum permissible inlet water pressure is 0.04MPa.

Disposal

- For disposing of package and the appliance please go to a recycling center.
  Therefore cut off the power supply cable and make the door closing device unusable.
- Cardboard packaging is manufactured from recycled paper and should be disposed in the waste paper collection for recycling.
- By ensuring this product is disposed of correctly, you will help prevent potential negative consequences for the environment and human health, which could otherwise be caused by inappropriate waste handling of this product.
- For more detailed information about recycling of this product, please contact your local city office and your household waste disposal service.
- **DISPOSAL: Do not dispose this product as unsorted municipal waste. Collection of such waste separately for special treatment is necessary.**

SPECIFICATIONS

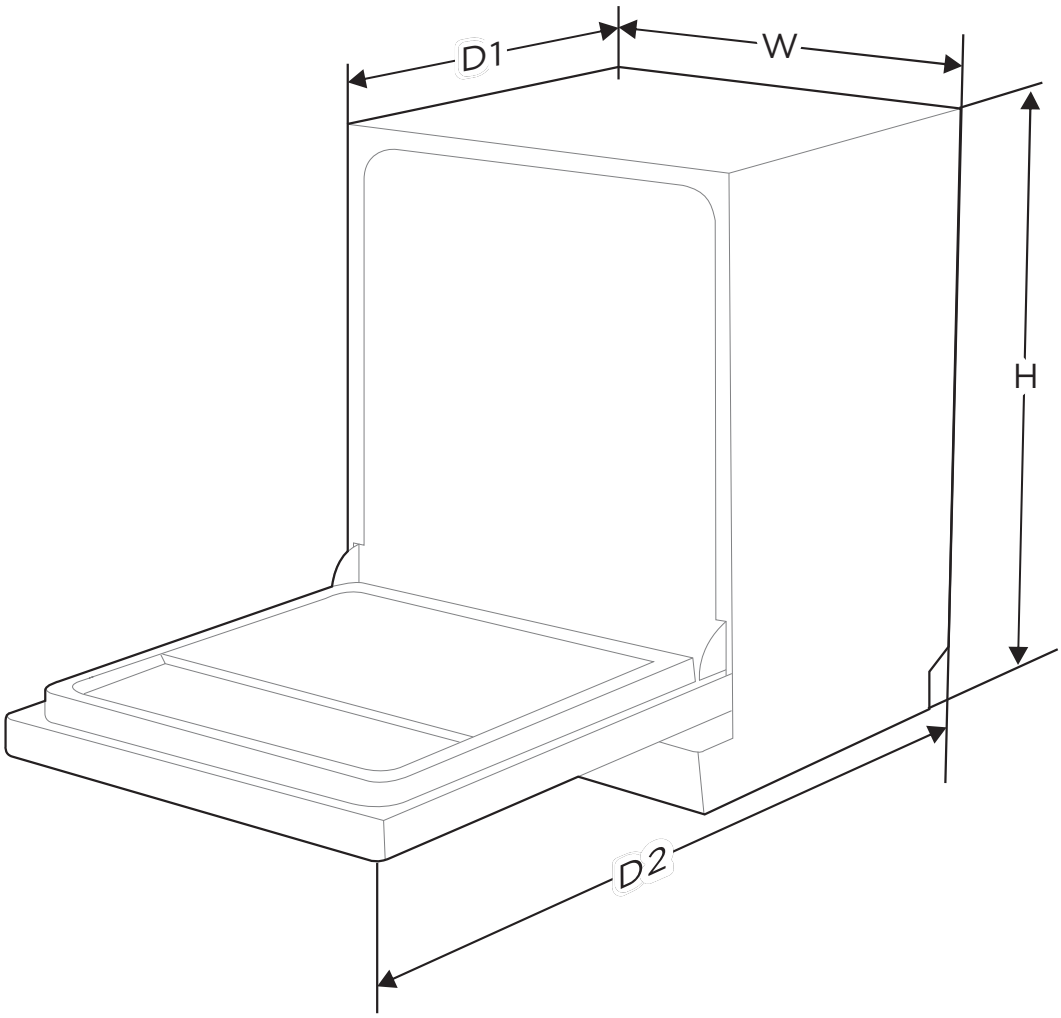

Height (H)	845 mm
Width (W)	598 mm
Depth (D1)	600 mm (with the door closed)
Depth (D2)	1175 mm (with the door opened 90°)

Product information sheet (EN60436)

Supplier's name or trade mark: MIDEA

Supplier's address ([b]): 16 Blackfriars St, Salford, Manchester, United Kingdom, M3 5BQ

Model identifier: MDWEF1433G(SS)-WUG-UK

General product parameters:

Parameter	Value	Parameter	Value	
Rated capacity ([a]) (ps)	14	Dimensions in cm	Height	85
			Width	60
			Depth	60
EEI ([a])	37,9	Energy efficiency class ([a])	B ([c])	
Cleaning performance index ([a])	1,125	Drying performance index ([a])	1,065	
Energy consumption in kWh [per cycle], based on the eco program using cold water fill. Actual energy consumption will depend on how the appliance is used.	0,645	Water consumption in litres [per cycle], based on the eco program. Actual water consumption will depend on how the appliance is used and on the hardness of the water.	9,8	
Program duration ([a]) (h:min)	3:40	Type	Free standing	
Airborne acoustical noise emissions ([a]) (dB(A) re 1 pW)	40	Airborne acoustical noise emission class ([a])	B ([c])	
Off-mode (W)	0,49	Standby mode (W)	1,00	
Delay start (W) (if applicable)	1,00	Networked standby (W) (if applicable)	2,00	

Minimum duration of the guarantee offered by the supplier ([b]): 12 months

Additional information:

Weblink to the supplier's website, where the information in point 6 of Annex II to Commission Regulation (EU) 2019/2022 ([1]) ([b]) is found: www.midea.com/uk

(a) for the eco program.
(b) changes to these items shall not be considered relevant for the purposes of paragraph 4 of Article 4 of Regulation (EU) 2017/1369.
(c) if the product database automatically generates the definitive content of this cell the supplier shall not enter these data.

(d) Commission Regulation (EU) 2019/2022 of 1 October 2019 laying down eco design requirements for household dishwashers pursuant to Directive 2009/125/EC of the European Parliament and of the Council amending Commission Regulation (EC) No 1275/2008 and repealing Commission Regulation (EU) No 1016/2010 (see page 267 of this Official Journal).

PRODUCT OVERVIEW

Product

IMPORTRANT

To get the best performance from your dishwasher, read all operating instructions before using it for the first time.

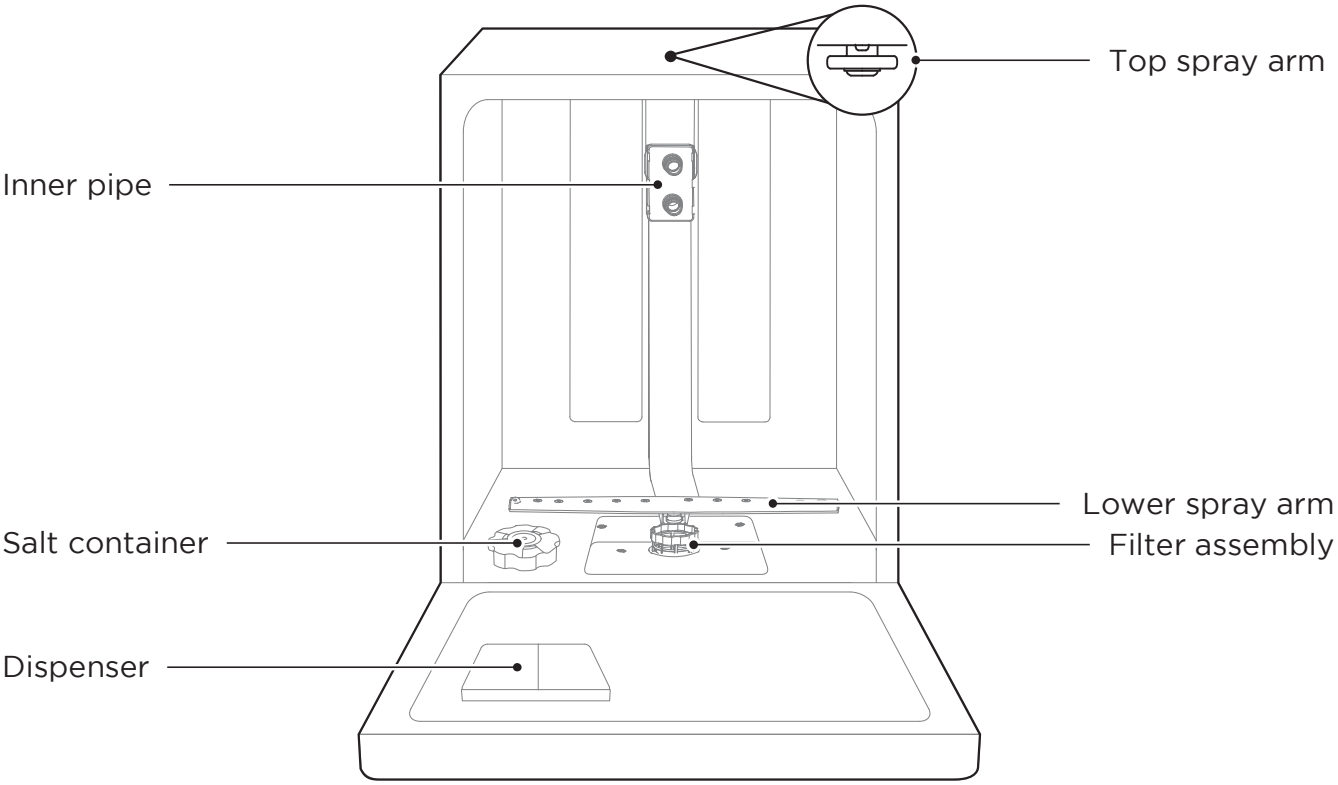

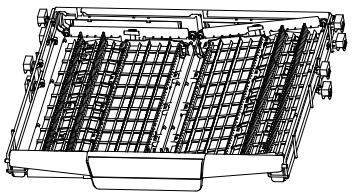

Cutlery rack

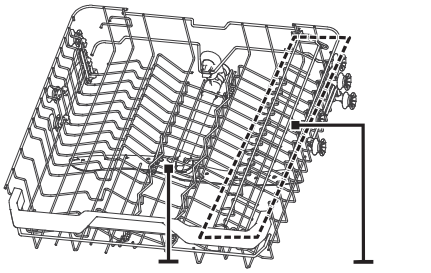

Upper basket

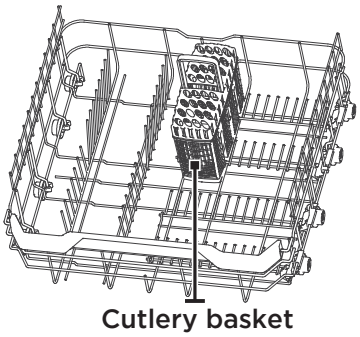

Lower basket

NOTE

Pictures are only for reference, different models may be different.

QUICK START GUIDE

Please read the corresponding content in the instruction manual for detailed operating method.

1.Install the dishwasher

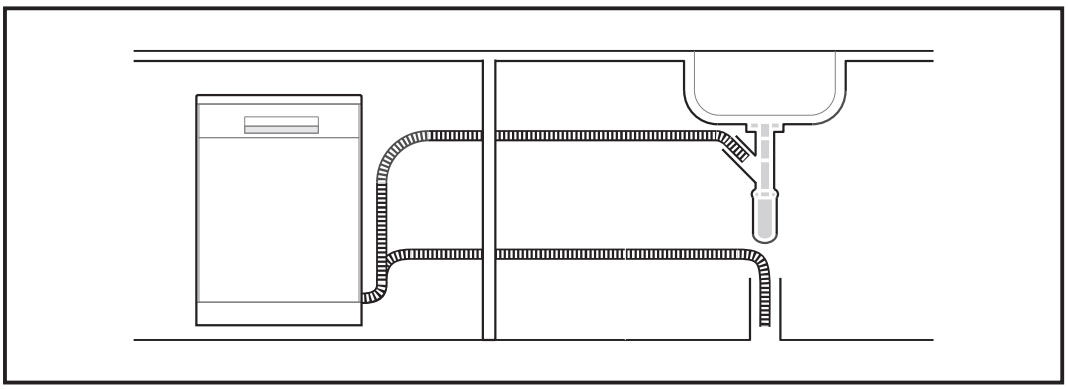

2. Remove larger residue from dishes.
   Avoid pre-rinsing.

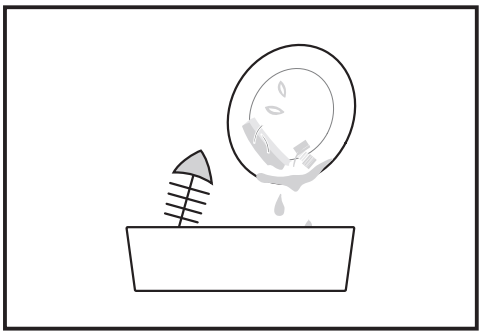

3. Load the baskets.

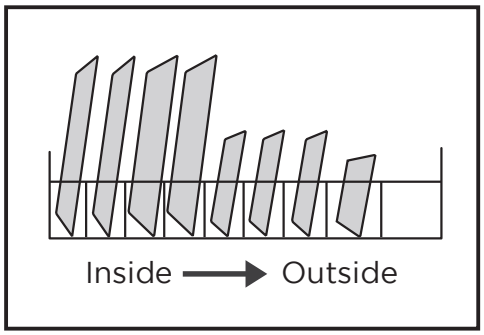

4. Fill the dispenser with detergent and rinse aid.

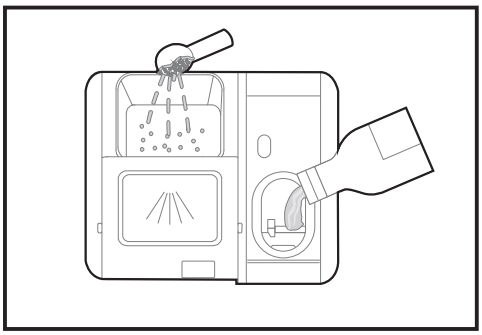

5. Select a suitable program and start the dishwasher.

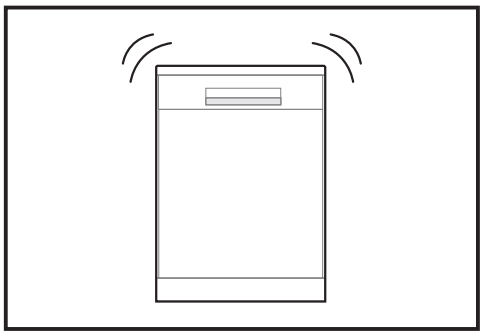

PRODUCT INSTALLATION

⚠ WARNING

Electrical Shock Hazard
Disconnect electrical power before installing dishwasher.
Failure to do so could result in death or electrical shock.

⚠ Attention

The installation of the pipes and electrical equipments should be done by professionals.

About Power Connection

⚠ WARNING

For personal safety:
Do not use an extension cord or an adapter plug with this appliance.
Do not, under any circumstances, cut or remove the earthing connection from the power cord.

Electrical requirements

Please look at the rating label to know the rating voltage and connect the dishwasher to the appropriate power supply. Use the required fuse 10A/13A/16A, time delay fuse or circuit breaker recommended and provide separate circuit serving only this appliance.

Electrical connection

Ensure the voltage and frequency of the power being corresponds to those on the rating plate. Only insert the plug into an electrical socket which is earthed properly.
If the electrical socket to which the appliance must be connected is not appropriate for the plug, replace the socket, rather than using a adaptors or the like as they could cause overheating and burns.

⚠ Ensure that proper earthing exists before use

Water Supply And Drain

Cold water connection

Connect the cold water supply hose to a threaded 3/4(inch) connector and make sure that it is fastened tightly in place.
If the water pipes are new or have not been used for an extended period of time, let the water run to make sure that the water is clear. This precaution is needed to avoid the risk of the water inlet to be blocked and damage the appliance.

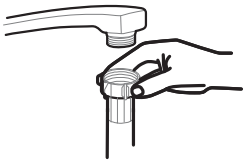

ordinary supply hose

safety supply hose

About the safety supply hose

The safety supply hose consists of the double walls. The system guarantees its intervention by blocking the flow of water in case of the supply hose breaking and when the air space between the supply hose itself and the outer corrugated hose is full of water.

How to connect the safety supply hose

1. Pull the safety supply hoses out from storage compartment located at rear of dishwasher.
2. Tighten the screws of the safety supply hose to the faucet with thread 3/4inch.
3. Turn the water fully on before starting the dishwasher.

How to disconnect the safety supply hose

1. Turn off the water.
2. Unscrew the safety supply hose from the faucet.

Connection Of Drain Hoses

Insert the drain hose into a drain pipe with a minimum diameter of 4 cm, or let it run into the sink, making sure to avoid bending or crimping it. The height of drain pipe must be less than 1000 mm. The free end of the hose must not be immersed in water to avoid the back flow of it.

⚠ Please securely fix the drain hose in either position A or position B

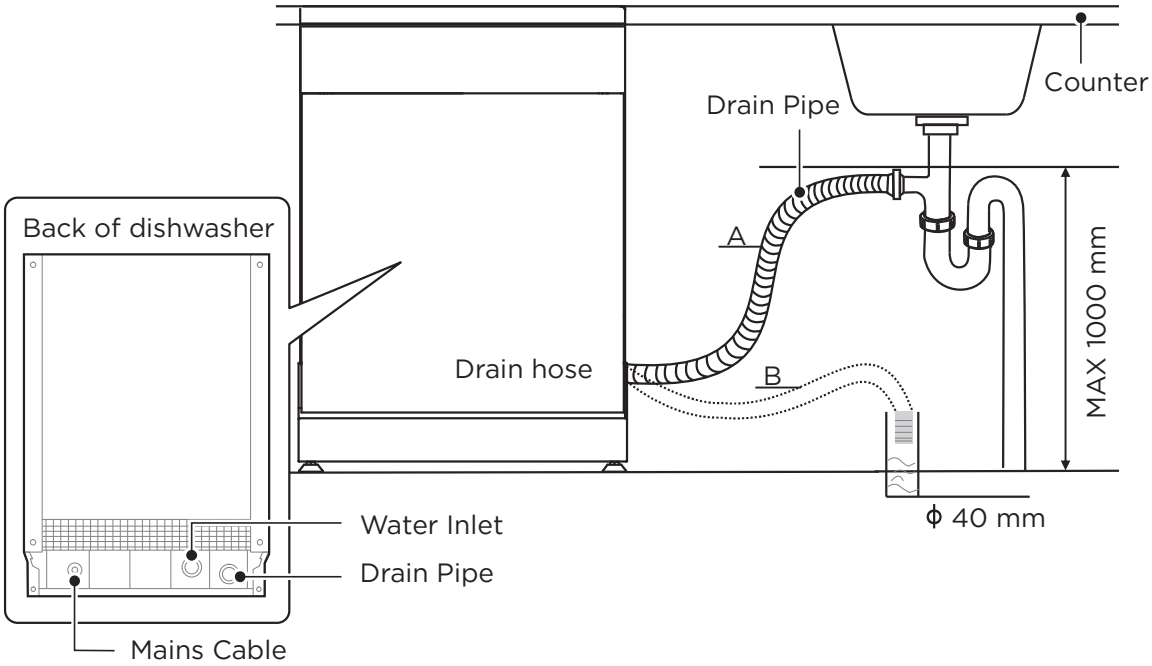

How to drain excess water from hoses

If the connection to the drain pipe is positioned higher than 1000 mm, excess water may remain in the drain hose. It will be necessary to drain excess water from the hose into a bowl or suitable container that is held outside and lower than the sink.

Water outlet

Connect the water drain hose. The drain hose must be correctly fitted to avoid water leaks. Ensure that the water drain hose is not kinked or squashed.

Extension hose

If you need a drain hose extension, make sure to use a similar drain hose.
It must not be longer than 4 meters, otherwise the cleaning effect of the dishwasher could be reduced.ance.

Syphon connection

The waste connection must be at a height less than 1000 mm (maximum) from the bottom of the dishwasher.

Positioning The Appliance

Position the appliance in the desired location. The back should rest against the wall behind it, and the sides, along the adjacent cabinets or walls. The dishwasher is equipped with water supply and drain hoses that can be positioned either to the right or the left sides to facilitate proper installation.

Levelling the appliance

Once the appliance is positioned for levelling, the height of the dishwasher may be altered via adjustment of the screwing level of the feet.
In any case, the appliance should not be inclined more than 2°

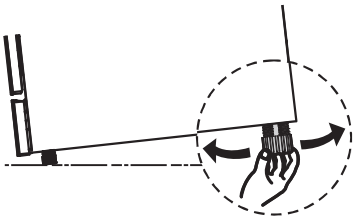

Free Standing Installation

Type 1: Fitting between existing carbinets

The height of the dishwasher, 845 mm, has been designed in order to allow the machine to be fitted between existing cabinets of the same height in modern fitted kitchens. The feet can be adjusted so that correct height is reached.
The laminated top of the machine does not require any particular care since it is heatproof, scratchproof and stainproof.

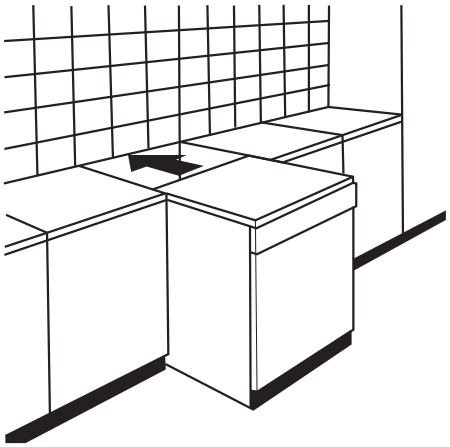

Type 2: Underneath existing work top

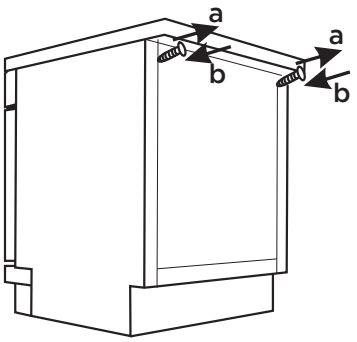

(When fitting beneath a work top)
In most modern fitted kitchens there is only one single work top under which cabinets and electrical appliances are fitted. In this case remove the work top of the dishwasher by unscrewing the screws under the rear edge of the top (a).

⚠ Attention

After removing the work top, the screws must be screwed again under the rear edge of the top (b).

Selecting the best location for the dishwasher

The installation position of the dishwasher should be near the existing inlet and drain hose and power socket.
Illustrations of cabinet dimensions and installation position of the dishwasher.

1. Less than 5 mm between the top of dishwasher and cabinet and the outer door aligned to cabinet.

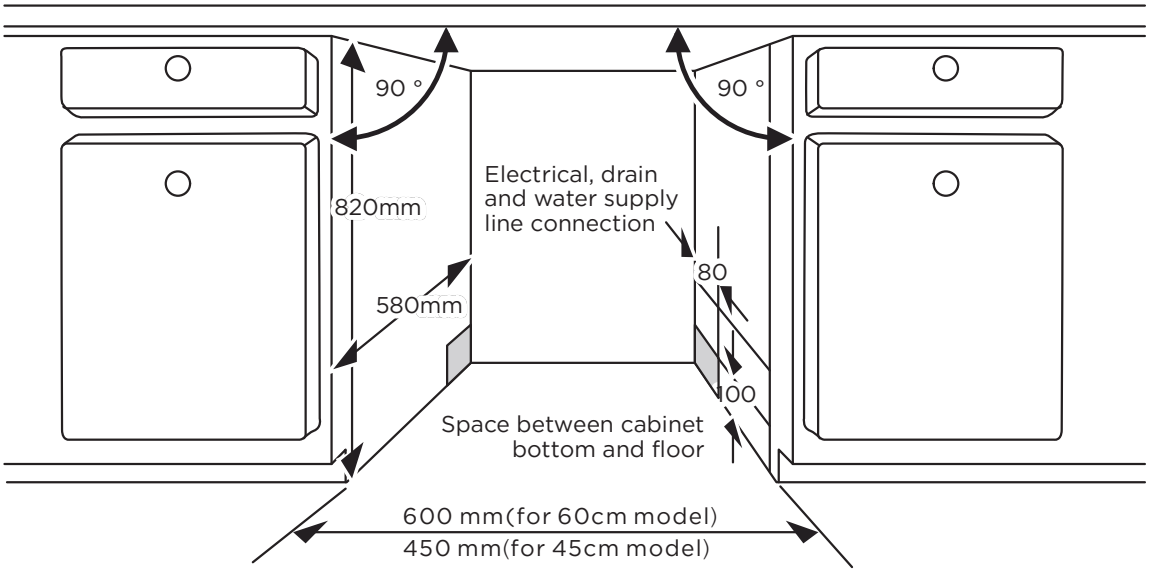

2. If dishwasher is installed at the corner of the cabinet, there should be some space when the door is opened.

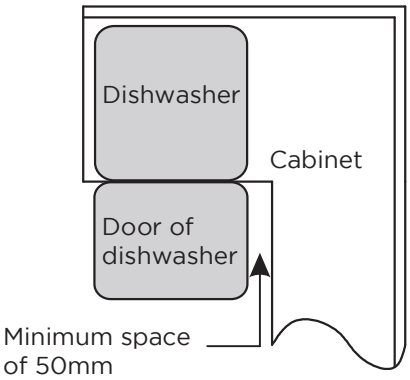

⚠ Depending on where your electrical outlet is, you may need tocut a hole in the opposite cabinet side.

OPERATION INSTRUCTIONS

Control Panel

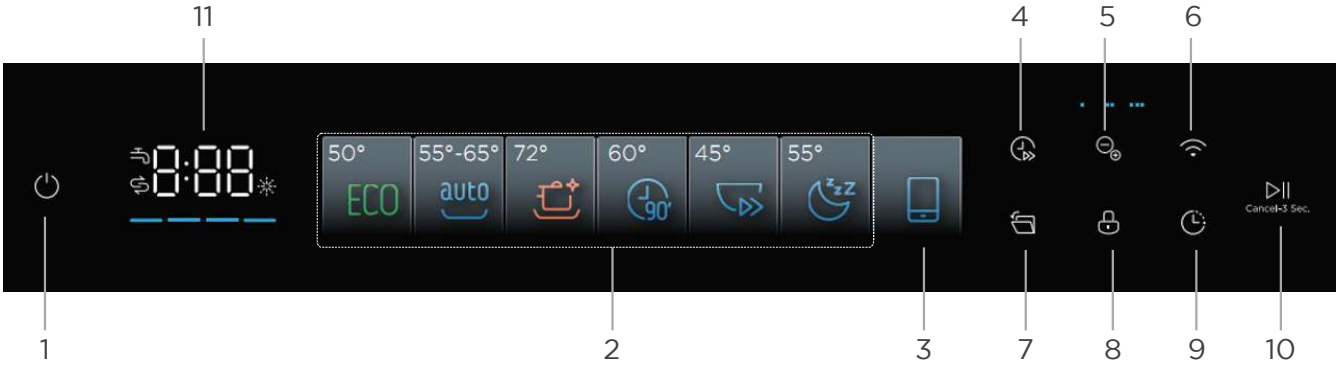

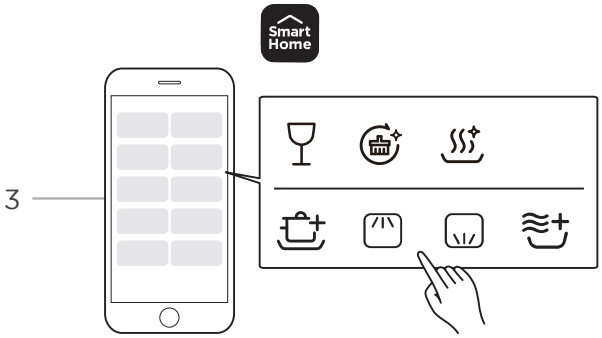

		Description
No.1	Power	• Press this button to turn on your dishwasher.
No.2 Program buttons	ECO	• This is standard program, it is suitable to clean normally soiled tableware and it is the most efficient program in terms of its combined energy and water consumption for that type of tableware.
	Auto	• Auto sensing wash, lightly, normally or heavily soiled crockery, with or with out dried-on food.
	IntensiveCare+	• For the heaviest soiled crockery, and normally soiled pots, pans, dishes etc. With dried-on food.
	90 min	• For normally soiled loads that need 90 min wash.
	Rapid	• A shorter wash for lightly soiled loads that do not need drying.
	Whisper	• Lower noise and normally energy consumption, used for washing in evening.
Smart Home No.3	Cloud wash	• This program refers to a variety of washing programs or function that can be selected in the APP. Press this button to select the last washing program that was started in the APP. If the washing program has not been activated in the APP, the Glass will be activated by default.

		Description
Smart Home No.3	Cloud wash	Glass For lightly soiled crockery and glass. MachineCare+ This program provides an effective cleaning of the dishwasher itself. HygieneCare+ Use to sanitize your dishes and glassware. The highest water temperature is 72°C.
	Function on APP only	Power wash To wash very dirty, hard to clean dishes. (It can only be used with ECO, Auto, IntensiveCare+, 90min, Whisper, Glass, HygieneCare+) Upper wash When you select Upper, only the dishes in the upper rack will be washed. The spray system of the lower basket will not operate. Lower wash When you select Lower, only the dishes in the lower rack will be washed. The spray system of the upper basket will not operate. Extra Drying To dry dishes more completely. (It can only be used with ECO, Auto, IntensiveCare+, 90min, Glass, HygieneCare+)
No.4	Turbo speed+	• Reduce the program time. (It can't be used with Auto, Rapid, MachineCare+)
No.5	Ion Dishfresh	• Press the button to choose the time of 30min, 45min and 60min for Ion Dishfresh running seperately and the corresponding icon on the panel will be lit.
No.6	Connect	• Press the button for more than 3 seconds. After a short bleeping and the icon starts to blink slowly, it's in the network linking status to APP. • Indicator light flashing slowly shows DW is waiting for connection. • Indicator light flashing quickly shows DW is connecting. • Indicator light always on shows DW is connected to your wireless router. • Turn off the wireless: When the dishwasher is powered off, press the Connect button for 10 seconds to turn off the wireless. Repeat this operation to turn on wireless. • Unbinding device: When the dishwasher is powered on, press the Connect button for 15 seconds to unbind the device. • Connect indicator: If the network connection is not successful, the hotspot and Connect indicator will be automatically turned off after 10 minutes.

		Description
No.7	Auto open	• After washing, the door will open automatically to achieve better drying effect.(It can't be used with Rapid) Press the button for 3 seconds simultaneously to select or cancel this function. You can press the button to activate or remove the Auto Open option. The dishwasher door must not be blocked when set to open automatically. This can disrupt door lock functionality.
No.8	Child lock	• This function allows you to lock the buttons on the control panel, so children cannot accidently start the dishwasher by pressing the buttons on the panel. Only the Power button remains active. To lock or unlock the buttons on the control panel, press and hold the buttons for 3 seconds simultaneously.
No.9	Delay	• Press the button to increase the delay start time. Delay a cycle for up to 24 hours in one-hour increments.
No.10	Start/Pause	• After completing program and function selection or delay time setting, press this button to start. When the washing program is running, after the program is suspended by opening the door, press and hold this button for 3 seconds to cancel the current program and function.
No.11 Screen	8:88	• To show the reminding time, delay time, error code etc.
	Water Faucet	• If the " " indicator is lit, it means that no water is reaching the dishwasher.
	Salt	• If the " " indicator is lit, it means the dishwasher is low on dishwasher salt and needs to be refilled.
	Rinse Aid	• If the " " indicator is lit, it means the dishwasher is low on dishwasher rinse aid and requires a refill.

Programs

The table below shows which programs are best for the levels of food residue on them and how much detergent is needed. It also show various information about the programs. Consumption values and program duration are only indicative except for the ECO program.

(●)indicates that the program uses rinse aid in the last rinse.

Program	Description Of Cycle	Detergent Pre/Main Wash	Running Time(min)	Energy (kWh)	Water (L)	Rinse Aid
50° ECO (*EN60436)	Pre-wash Wash (50°C) Rinse Rinse (40°C) Drying	4/18g 1 or 2 tabs	220	0.645	9.8	●

Program	Description Of Cycle	Detergent Pre/Main Wash	Running Time(min)	Energy (kWh)	Water (L)	Rinse Aid
Auto	Prewash (45°C) Wash (55-65°C) Rinse Rinse (50-55°C) Drying	4/18g 1 or 2 tabs	85-150	0.850-1.550	8.5~18.7	●
IntensiveCare+	Pre-wash Wash (72°C) Rinse Rinse (70°C) Drying	4/18g 1 or 2 tabs	178	1.575	14.7	●
90 min	Wash (60°C) Rinse Rinse (50°C) Drying	22g 1 tab	90	1.180	11.9	●
Rapid	Wash (45°C) Rinse (45°C)	12g 1 tab	30	0.820	11.3	○
Whisper	Pre-wash (30°C) Wash (55°C) Rinse Rinse (55°C) Drying	4/18g 1 or 2 tabs	270	1.415	14.9	●
Glass	Pre-wash Wash (50°C) Rinse (50°C) Rinse (50°C) Drying	4/18g 1 or 2 tabs	120	0.995	14.8	●
MachineCare+	Wash (72°C) Rinse Rinse (65°C) Drying	4/18g 1 or 2 tabs	150	1.350	10.8	●
HygieneCare+	Pre-wash Wash (72°C) Rinse Rinse (70°C) Drying	22g 1 or 2 tabs	159	1.485	14.5	●

NOTE

ECO (*EN60436) : The ECO program is suitable to clean normally soiled tableware, that for this use, it is the most efficient program in terms of its combined energy and water consumption, and it is used to assess compliance with the EU ecodesign legislation.

Preparing And Loading Dishes

Consider buying utensils which are identified as dishwasher-proof.
For particular items, select a program with the lowest possible temperature.
To prevent damage, do not take glass and cutlery out of the dishwasher immediately after the program has ended.

For washing the following cutlery/dishes
Are not suitable
Cutlery with wooden, horn china or mother-of-pearl handles
Plastic items that are not heat resistant
Older cutlery with glued parts that are not temperature resistant
Bonded cutlery items or dishes
Pewter or cooper items
Crystal glass
Steel items subject to rusting
Wooden platters
Items made from synthetic fibres

Are of limited suitability
Some types of glasses can become dull after a large number of washes
Silver and aluminum parts have a tendency to discolor during washing
Glazed patterns may fade if machine washed frequently

Recommendations for loading the dishwasher
Scrape off any large amounts of leftover food. Soften remnants of burnt food in pans. It is not necessary to rinse the dishes under running water.
For best performance of the dishwasher, follow these loading guidelines.
(Features and appearance of baskets and cutlery baskets may vary from your model.)
Place objects in the dishwasher in the following way:
tems such as cups, glasses, pots, pans, etc. must face downwards.
Curved items, or ones with recesses, should be loaded aslant so that water can run off.
All utensils are stacked securely and can not tip over.
All utensils are placed in the way that the spray arms can rotate freely during washing.
Load hollow items such as cups, glasses, pans etc. With the opening facing downwards so that water cannot collect in the container or a deep base.
Dishes and items of cutlery must not lie inside one another, or cover each other.
To avoid damage, glasses should not touch one another.
The upper basket is designed to hold more delicate and lighter dishware such as glasses, coffee and tea cups.
Long bladed knives stored in an upright position are a potential hazard!
Long and sharp items of cutlery such as carving knives must be positioned horizontally in the upper basket.
Please do not overload your dishwasher. This is important for good results and for reasonable consumption of energy.

NOTE
Very small items should not be washed in the dishwasher as they could easily fall out of the basket.

Removing the dishes

To prevent water dripping from the upper basket into the lower basket, we recommend that you empty the lower basket first, followed by the upper basket.

⚠ WARNING

Items will be hot! To prevent damage, do not take glass and cutlery out of the dishwasher for around 15 minutes after the program has ended.

Loading the upper basket

The upper basket is designed to hold more delicate and lighter dishware such as glasses, coffee and tea cups and saucers, as well as plates, small bowls and shallow pans (as long as they are not too dirty). Position the dishes and cookware so that they will not get moved by the spray of water.

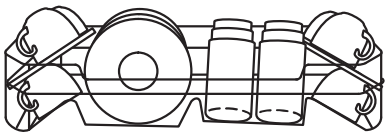

Loading the lower basket

We suggest that you place large and difficult to clean items into the lower basket: such as pots, pans, lids, serving dishes and bowls, as shown in the figure below. It is preferable to place serving dishes and lids on the side of the racks in order to avoid blocking the rotation of the top spray arm.
The maximum diameter advised for plates in front of the detergent dispenser is of 19 cm, this not to hamper the opening of it.

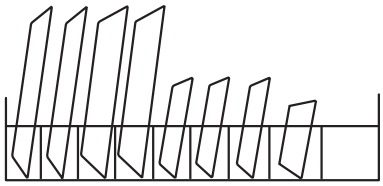

Loading the cutlery rack

Cutlery should be placed in the cutlery rack separate from each other in the appropriate positions. Avoid nesting of the cutlery to prevent insufficient cleaning performance.

LOADING THE BASKETS ACCORDING TO EN60436:

Loading the dishwasher to its full capacity will contribute to energy and water savings.

1.Upper basket:

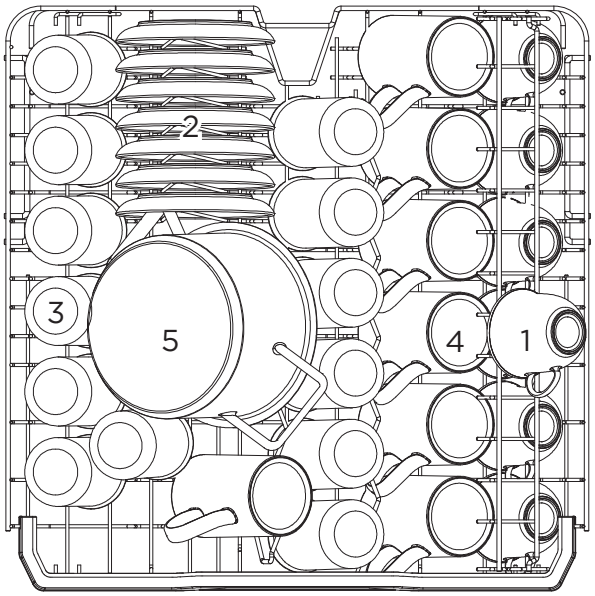

Number	Item
1	Cups
2	Saucers
3	Glasses
4	Mugs
5	Small pot

2.Lower basket:

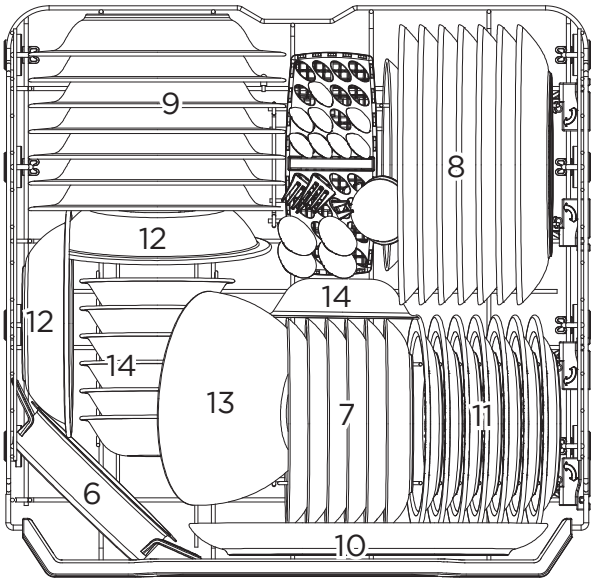

Number	Item
6	Oven pot
7	Dessert plates
8	Dinner plates
9	Soup plates
10	Oval platter
11	Melamine dessert plates
12	Melamine bowls
13	Glass bowl
14	Dessert bowls

3.Cutlery rack:

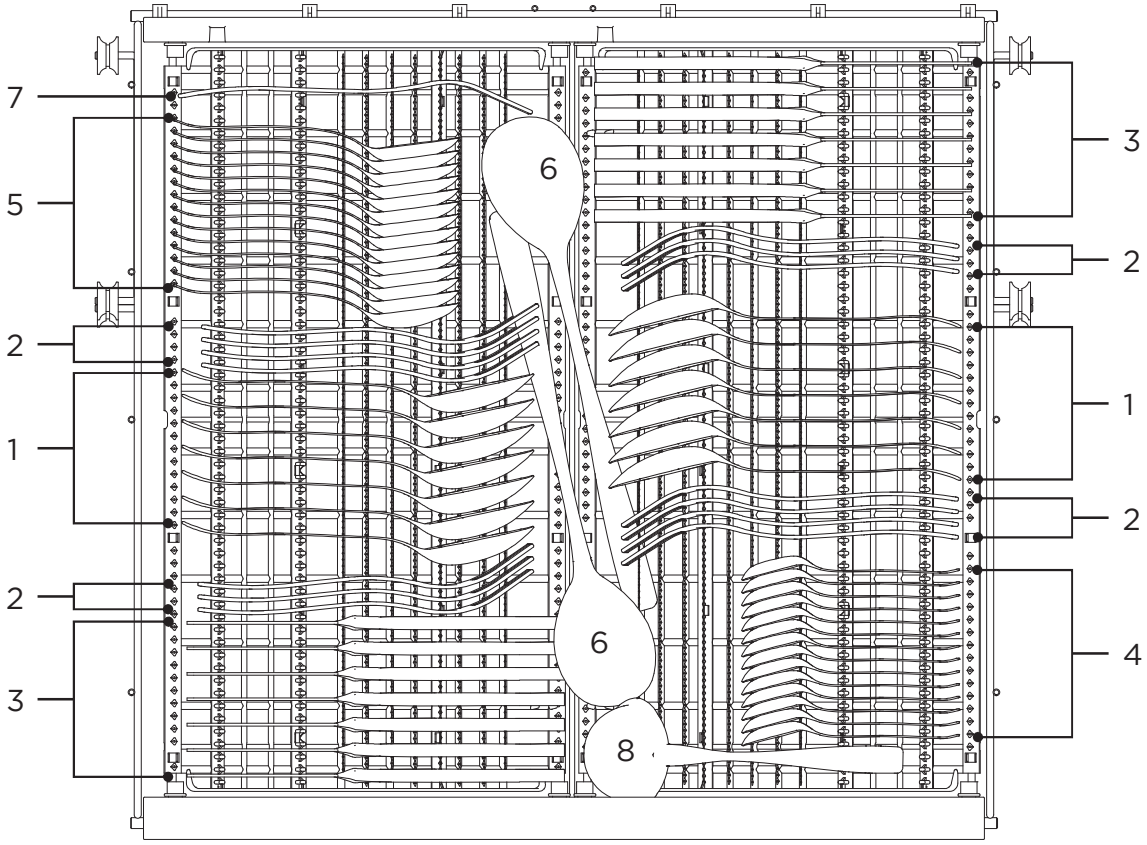

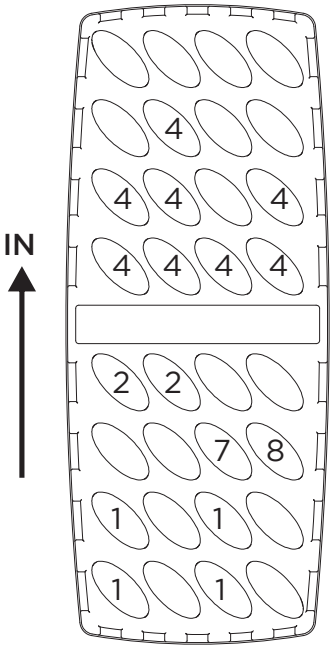

Number	Item
1	Soup spoons
2	Forks
3	Knives
4	Tea spoons
5	Dessert spoons
6	Serving spoons
7	Serving fork
8	Gravy ladle

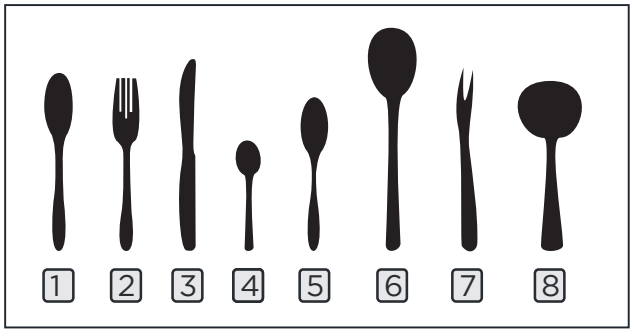

Information for comparability
tests in accordance with EN60436
Capacity: 14 place settings
Position of the upper basket: lower position
Program: ECO
Rinse aid setting: Max
Softener setting: H3

Cutlery Rack Used Tips

1. Lift the right basket up, both left and right baskets are flat.

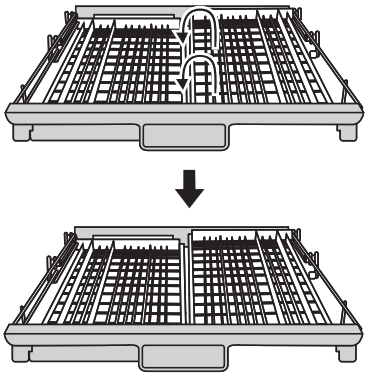

2. Move the right basket from right to left, two basket are overlapping.

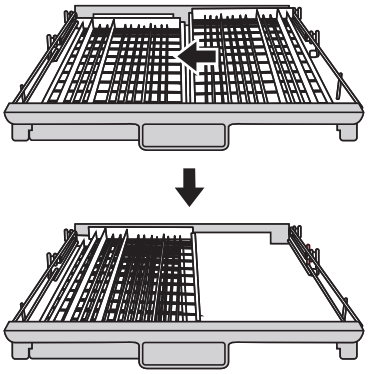

3. Remove the right basket from the tray, only has the left basket.

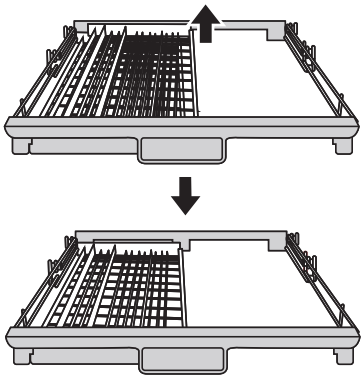

Easy removal of cutlery

Using the principle of crank slider mechanism, the cutlery are suspended. Convenient finger goes deep under the knife and fork, and holds several cutlery at a time.

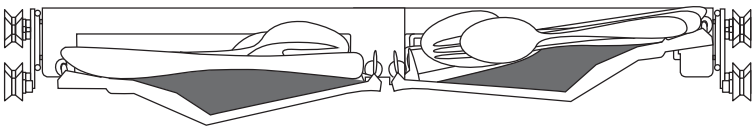

Make the most of space

It can accommodate dishes such as egg beaters, cups, etc., and does not affect the upper basket.

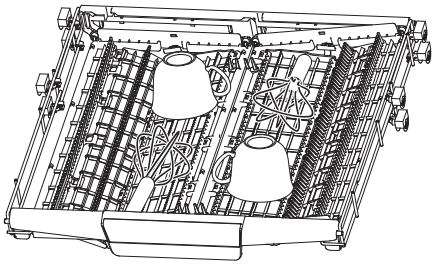

Adjust the height of the rack

Loosen the four buttons on the tray and press down gently.

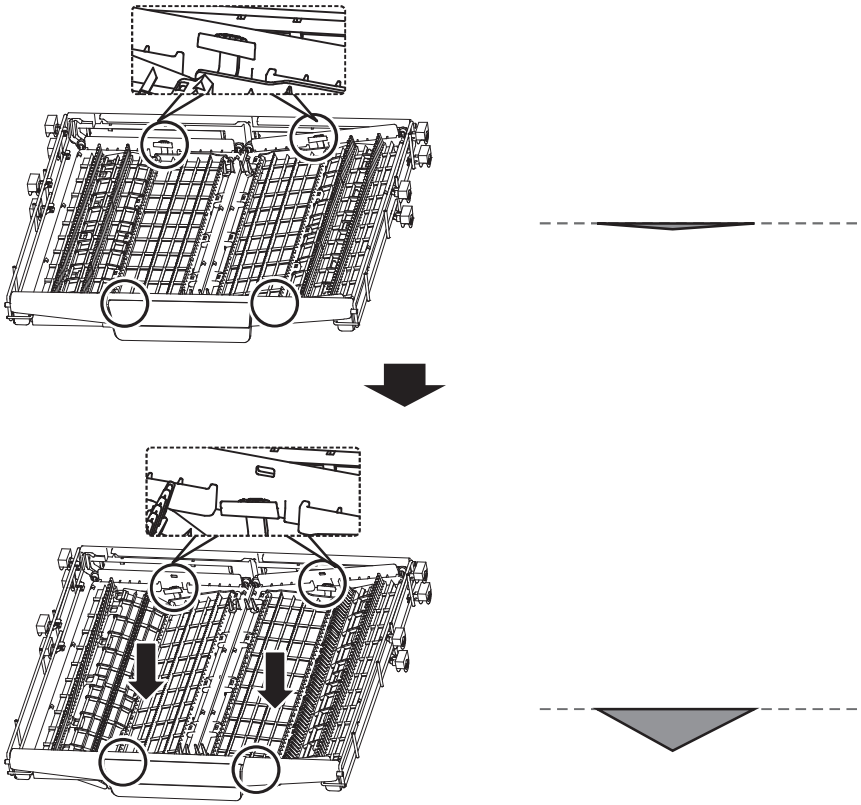

Basket Loading Tips

Adjusting the upper basket

The height of the upper basket can be easily adjusted to accommodate taller dishes in either the upper or lower basket.
To adjust the height of the upper rack, follow these steps:

1. To raise the upper basket, just lift the upper basket at the center of each side until the basket locks into place in the upper position. It is not necessary to lift the adjuster handle.

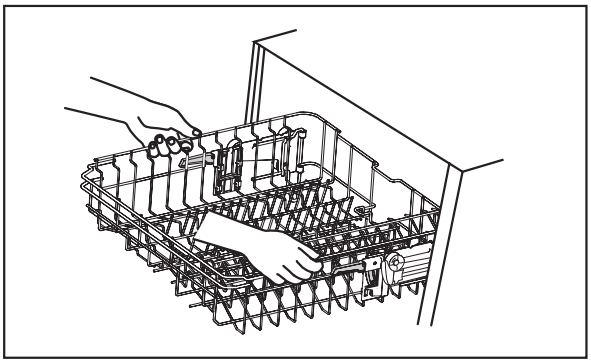

2. To lower the upper basket, lift the adjust handles on each side to release the basket and lower it to the lower position.

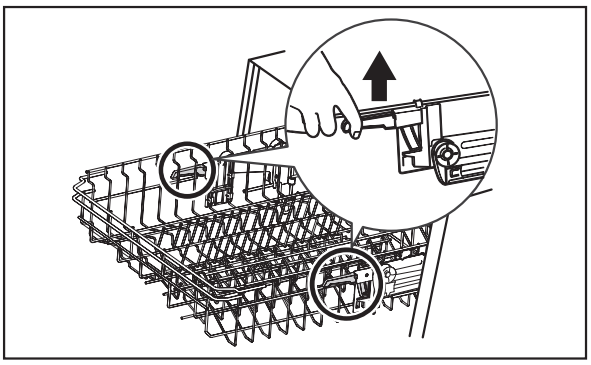

Folding back the cup shelves

To make room for taller items in the upper basket, raise the cup rack upwards.
You can then lean the tall glasses against it.

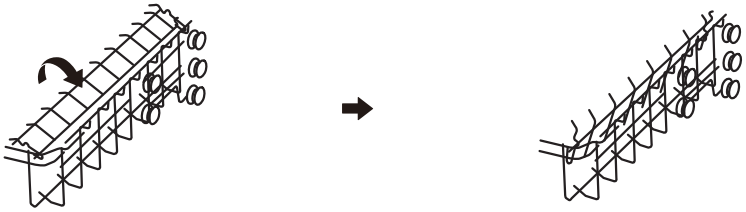

Folding back the rack shelves

The spikes of the lower basket are used for holding plates and a platter.
They can be lowered to make more room for large items.

raise upwards

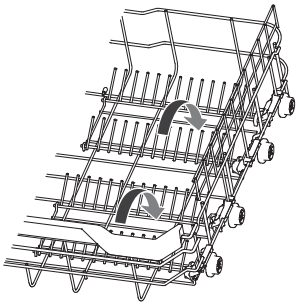

fold backwards

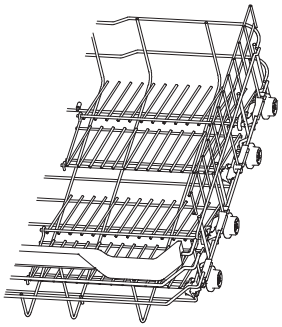

Loading The Salt Into The Softener

NOTE

If your model does not have any water softener, you may skip this section.
Always use salt intended for dishwasher use.
The hardness of the water varies from place to place. If hard water is used in the dishwasher, deposits will form on the dishes and utensils.
The appliance is equipped with a special softener that uses a salt container specifically designed to eliminate lime and minerals from the water.
The salt container is located beneath the lower basket and should be filled as explained in the following:

WARNING

Only use salt specifically designed for dishwashers use!
Every other type of salt not specifically designed for dishwasher use, especially table salt, will damage the water softener. In case of damages caused by the use of unsuitable salt the manufacturer does not give any warranty nor is liable for any damages caused.
Only fill with salt before running a cycle.
This will prevent any grains of salt or salty water, which may have been spilled, remaining on the bottom of the machine for any period of time, which may cause corrosion.

Please follow the steps below for adding dishwasher salt:

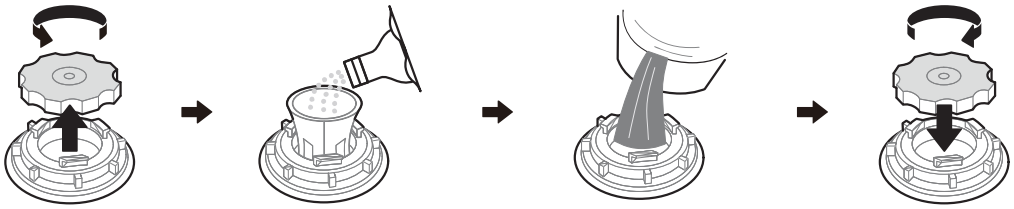

1. Remove the lower basket and unscrew the reservoir cap.
2. Place the end of the funnel (if supplied) into the hole and pour in about 1.5 kg of dishwasher salt.
3. Fill the salt container to its maximum limit with water, It is normal for a small amount of water to come out of the salt container.
4. After filling the container, screw back the cap tightly.
5. The salt warning light will turn off after the salt container has been filled with salt.
6. Immediately after filling the salt into the salt container, a washing program should be started (We suggest to use a short program). Otherwise the filter system, pump or other important parts of the machine may be damaged by salty water. This is out of warranty.

NOTE

The salt container must only be refilled when the salt warning light in the control panel comes on. Depending on how well the salt dissolves, the salt warning light may still be on even though the salt container is filled.
If there is no salt warning light in the control panel (for some models), you can estimate when to fill the salt into the softener by the cycles that the dishwasher has run.
If salt has spilled, run a soak or quick program to remove it.

Water Softener

The water softener must be set manually, using the water hardness dial.
The water softener is designed to remove minerals and salts from the water, which would have a detrimental or adverse effect on the operation of the appliance.
The more minerals there are, the harder your water is.
The softener should be adjusted according to the hardness of the water in your area.
Your local Water Authority can advise you on the hardness of the water in your area.

Adjusting salt consumption

The dishwasher is designed to allow for adjustment in the amount of salt consumed based on the hardness of the water used. This is intended to optimise and customise the level of salt consumption.
Please follow the steps below for adjustment in salt consumption.

1. Close the door, switch on the appliance;
2. Within 60 seconds after the appliance was switched on press the Cloud wash button for more than 5 seconds to enter the water softener setting mode.
3. Press the Cloud wash button again to select the proper setting according to your local water hardness, the setting will change in the following sequence: H3->H4->H5->H6->H1->H2->H3;
4. Without operation in 5 seconds or press the Power button to complete the setup and exit the setup mode.

WATER HARDNESS				Water softner level	Regeneration occurs every X program sequence 1)	Salt consumption (gram/cycle)
German °dH	French °fH	British °Clarke	Mmol/l			
0 - 5	0 - 9	0 - 6	0 - 0.94	H1	No regeneration	0
6 - 11	10 - 20	7 - 14	1.0 - 2.0	H2	10	9
12 - 17	21 - 30	15 - 21	2.1 - 3.0	H3	5	12
18 - 22	31 - 40	22 - 28	3.1 - 4.0	H4	3	20
23 - 34	41 - 60	29 - 42	4.1 - 6.0	H5	2	30
35 - 55	61 - 98	43 - 69	6.1 - 9.8	H6	1	60

1°dH=1.25 °Clarke=1.78) °fH=0.178mmol/l

The factory setting: H3

1) Every cycle with a regeneration operation consumes additional 2.0 litres of water, the energy consumption increases by 0.02 kWh and the program extents by 4 minutes.

Function Of The Rinse Aid And Detergent

The rinse aid is released during the final rinse to prevent water from forming droplets on your dishes, which can leave spots and streaks. It also improves drying by allowing water to roll off the dishes. Your dishwasher is designed to use liquid rinse aids.

⚠ WARNING

Only use branded rinse aid for dishwasher. Never fill the rinse aid dispenser with any other substances (e.g. Dishwasher cleaning agent, liquid detergent). This would damage the appliance.

When to refill the rinse aid

The regularity of the dispenser needing to be refilled depends on how often dishes are washed and the rinse aid setting used.
The Low Rinse Aid indicator ( )will be lit when more rinse aid is needed.
Do not overfill the rinse aid dispenser.

Function of detergent

The chemical ingredients that compose the detergent are necessary to remove, crush and dispense all dirt out of the dishwasher. Most of the commercial quality detergents are suitable for this purpose.

⚠ WARNING

Proper Use of Detergent
Use only detergent specifically made for dishwashers use. Keep your detergent fresh and dry.
Do not fill detergent into the dispenser until you are ready to start the dishwasher.

Dishwasher detergent is corrosive! Keep dishwasher detergent out of the reach of children.

Filling The Rinse Aid Reservoir

The rinse aid is released during the final rinse to prevent water from forming droplets on your dishes, which can leave spots and streaks. It also improves drying by allowing water to roll off the dishes. Your dishwasher is designed to use liquid rinse aids.

1. Remove the rinse reservoir cap by lifting up the handle .

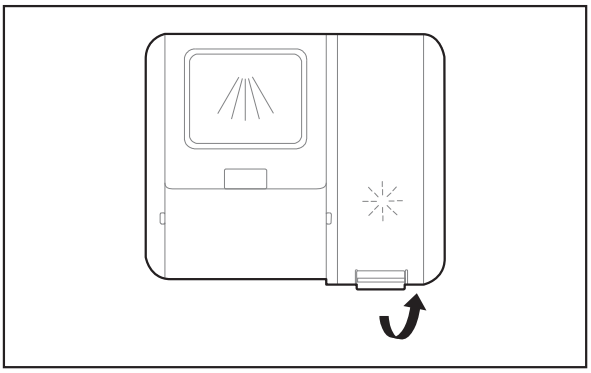

2. Pour the rinse aid into the dispenser, being careful not to overfill.

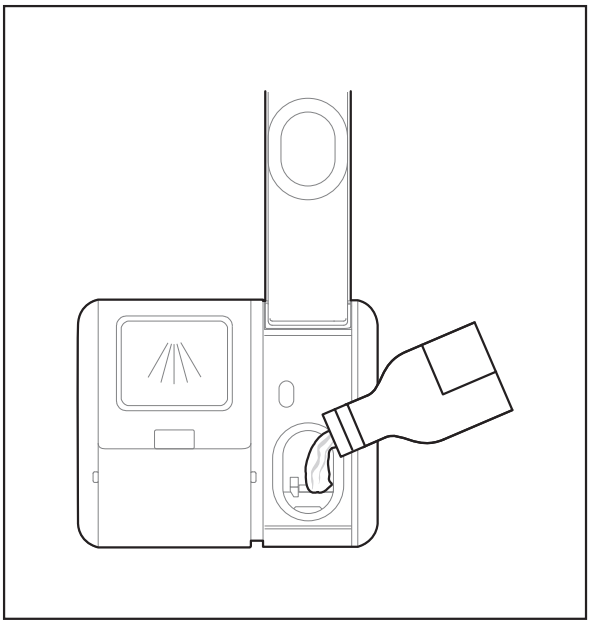

3. Close the cap after all.

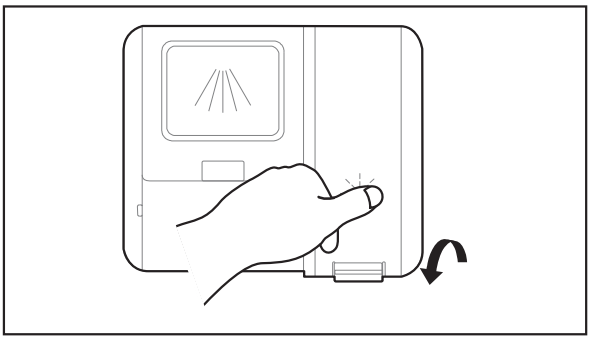

Adjusting the rinse aid reservoir

To achieve a better drying performance with limited rinse aid, the dishwasher is designed to adjust the consumption by user. Follow the below steps.

1. Close the door, switch on the appliance.
2. Within 60 seconds after the appliance was switched on press the Cloud wash button for more than 5 seconds, and then press the Delay button to enter the set model, the rinse aid indication blinks as 1Hz frequency.
3. Press the Cloud wash button again to select the proper set according to your using habits, the setting will change in the following sequence:
   d3->d4->d5->d1->d2->d3.
   The higher the number, the more rinse aid the dishwasher uses.
4. Without operation in 5 seconds or press the Power button to complete the setup and exit the setting mode.

The factory setting: d3

Filling The Detergent Dispenser

1. Please choose an open way according to the actual situation.

A. Open the cap by sliding the release latch.

B. Open the cap by pressing down the release latch.

C. Open the cap by pressing in the release latch.

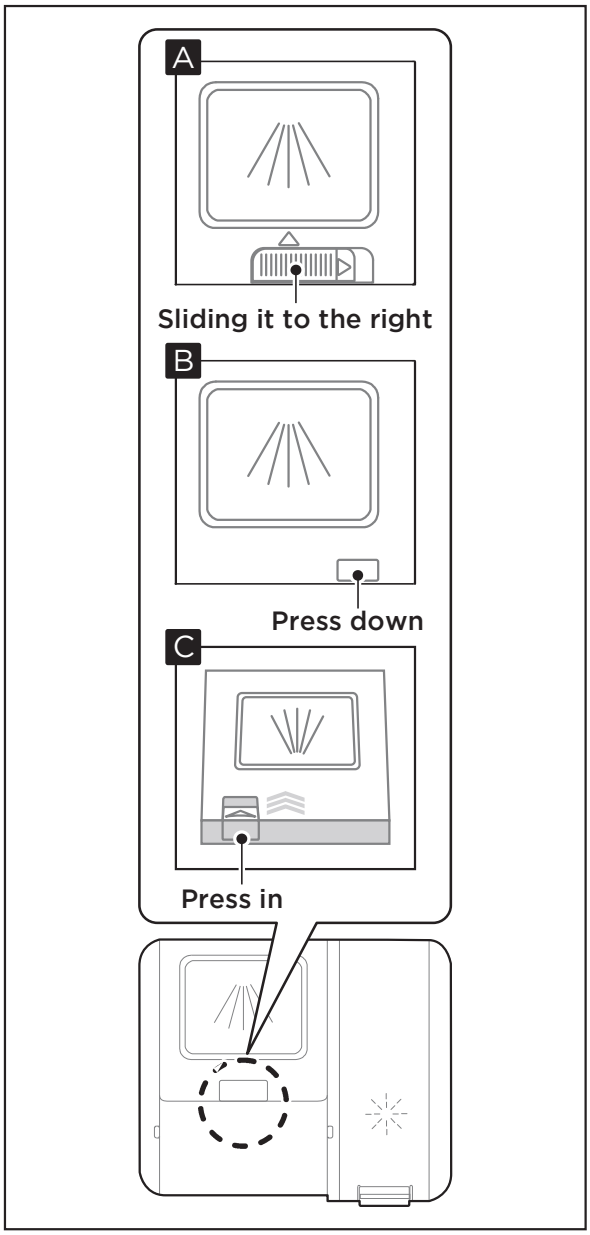

2. Add detergent into the larger cavity (A) for main wash.
For better cleaning result, especially if you have very dirt items, pour a small amount of detergent onto the door.
The additional detergent will activate during the pre-wash phase.

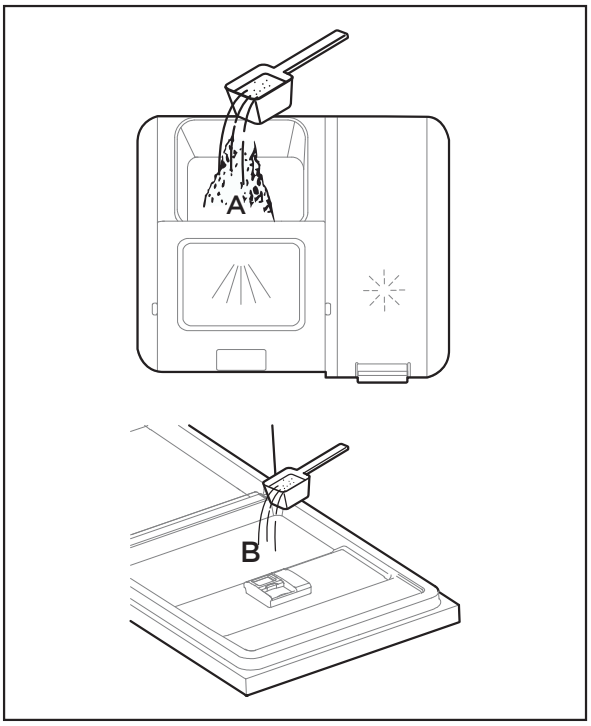

3. Close the flap by sliding it to the front and then pressing it down.

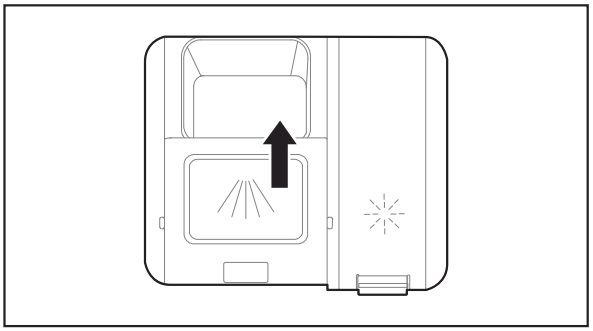

NOTE

Please observe the manufacturer's recommendations on the detergent packaging.

Saving Energy

1. Pre-rinsing of tableware items leads to increased water and energy consumption and is not recommended.
2. Washing tableware in a household dishwasher usually consumes less energy and water in the use phase than hand dishwashing when the household dishwasher is used according to the instructions.

Starting A Program

1. Draw out the lower and upper basket, load the dishes and push them back. It is commended to load the lower basket first, then the upper one.
2. Pour in the detergent.
3. Insert the plug into the socket. The power supply refer to last page ”Product fiche”. Make sure that the water supply is turned on to full pressure.
4. Close the door, press the Power button.
5. Choose a program, the response light will turn on. Then press the Start/Pause button, the dishwasher will start its cycle after a few seconds.

Changing The Program Mid-cycle

A program can only be changed if it has been running only for a short period of time, otherwise the detergent may have already been released or the the wash water with detergent has already been drained. If this is the case, the dishwasher needs to be reset and the detergent dispenser must be refilled. To reset the dishwasher, follow the instructions below:

1. Press the Start/Pause button to pause the washing.
2. Press the Start/Pause button for more than 3 seconds the machine will be in program selection mode.
3. Press a Program or Ion Dishfresh button to select the desired program.
4. Press the Start/Pause button, the dishwasher will start after a few seconds.

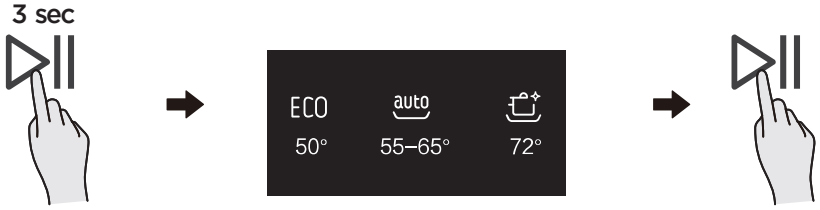

Forget To Add A Dish?

A forgotten dish can be added any time before the detergent dispenser opens. If this is the case, follow the instructions below:

1. Press the Start/Pause button to pause the washing.
2. After the spray arms stopped working, you can open the door completely.
3. Add the forgotten dishes.
4. Close the door.
5. Press the Start/Pause button, the dishwasher will continued to run.

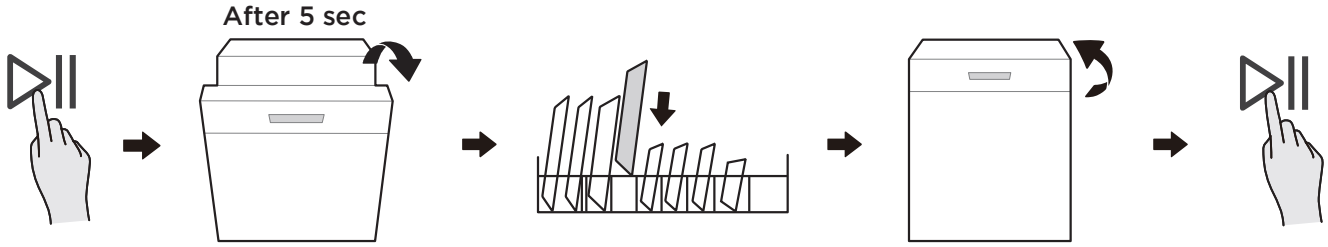

⚠ WARNING

It is dangerous to open the door mid-cycle, as hot steam may scald you.

How to use Ion Dishfresh?

Ion Dishfresh sterilize the dishwasher and also keep it odor-free. It can work individually or within whole drying phase.

1. It works during the drying phase of a cycle. You don't need to be set and it will keep working at whole drying phase of a washing cycle acquiescently except for Rapid Cycle.
2. You can also run Ion Dishfresh function individually. You can set the time with 30 min, 45 min or 60 min on APP or and on dishwasher. After setting the time, the corresponding indicator on the panel will be lit. Press Start/Pause button, it will run.

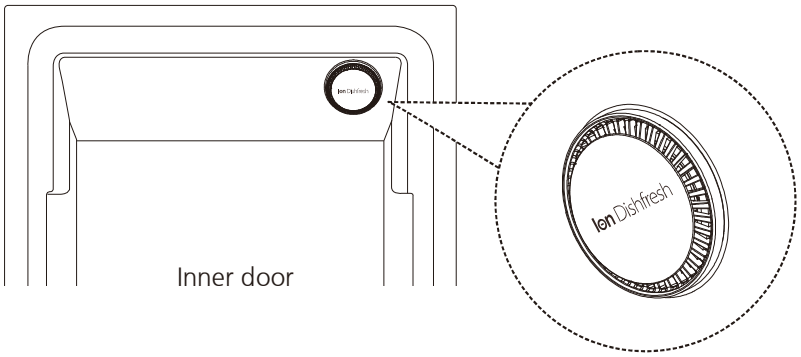

APP SETUP AND OPERATION

How to connect with SmartHome APP

Before you start, make sure that:

1. Your smartphone is connected to home wireless network, and you know the network password.
2. You are next to the appliances.
3. The 2.4GHz band wireless signal is enabled on your wireless router.
4. Turn on your mobile phone's Bluetooth and allows the APP to discover the smart device nearby.

Download the SmartHome app

On an app market (Google Play Store, Apple App Store), search for **SmartHome*** and find the SmartHome app. Download and install it on your phone. You can also download the app by scanning the QR code below.

Register and log in

Open the SmartHome app, and create a new account to start (you can also register through a third-party account). If you already have an existing account, use the account to log in.

Connect your devices to SmartHome

1. Please make sure your mobile phone is connected to a wireless network. If it is not, go to Settings and enable wireless networks and Bluetooth.
2. Please power on your devices.
3. Open SmartHome app on your phone.
4. If a message of "Smart devices discovered nearby" appears, click to add.

5. If no message appears, select "+" on the page and select your device in the list of nearby devices available. If your device is not listed, please add your device manually by the device category and device model.

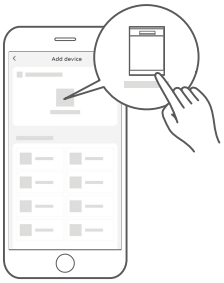

6. Connect your device to the wireless network according to instructions on app. If the connection fails, please follow the instructions provided by the app to continue with the operation.

NOTE

1. Make sure your devices are powered on.
2. Keep your mobile phone close enough to your device when you are connecting your device to the network.
3. Connect your mobile phone to the wireless network at home, and make sure you know the password of the wireless network.
4. Check if your wireless router supports 2.4 GHz band and turn it on. If you are not sure whether the router supports 2.4 GHz band, please contact the router manufacturer.
5. The device cannot connect to the wireless network that requires authentication, and it usually appears in public areas such as hotels,restaurants, etc. Please connect to a wireless network that does not require authentication.
6. Turn off the WLAN+ (Android) or WLAN Assistant (iOS) function of your mobile phone when connecting your device to the network.
7. In the case that your device connected to a wireless network before but it needs to reconnect, please click "+" on the app Home page, and add your device again by the device category and model according to the instructions on app.

CLEANING AND MAINTENANCE

External Care

The door and the door seal

Clean the door seals regularly with a soft damp cloth to remove food deposits.When the dishwasher is being loaded, food and drink residues may drip onto the sides of the dishwasher door. These surfaces are outside the wash cabinet and are not accessed by water from the spray arms. Any deposits should be wiped off before the door is closed.

The control panel

If cleaning is required, the control panel should be wiped with a soft damp cloth only.

⚠ WARNING

To avoid penetration of water into the door lock and electrical components, do not use a spray cleaner of any kind.
Never use abrasive cleaners or scouring pads on the outer surfaces because they may scratch the finish. Some paper towels may also scratch or leave marks on the surface.

Internal Care

Filtering system

The filtering system in the base of the wash cabinet retains coarse debris from the washing cycle, including foreign objects such as tooth picks or shards. The collected coarse debris may cause the filters to clog. Check the condition of the filters regularly, carefully remove foreign objects and clean the parts of the filtering system if necessary with water. Follow the steps below to clean the filter.

⚠ WARNING

Pictures are only for reference, different models of the filtering system and spray arms may be different.

1. Hold the coarse filter and rotate it anticlockwise to unlock the filter. Lift the filter upwards and out of the dishwasher.

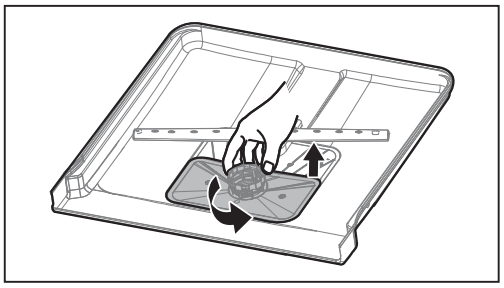

2. The fine filter can be pulled off the bottom of the filter assembly. The coarse filter can be detached from the main filter by gently squeezing the tabs at the top and pulling it away.

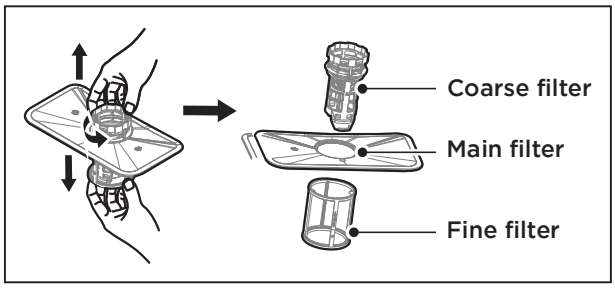

3. Larger food remnants can be cleaned by rinsing the filter under running water. For a more thorough clean, use a soft cleaning brush.

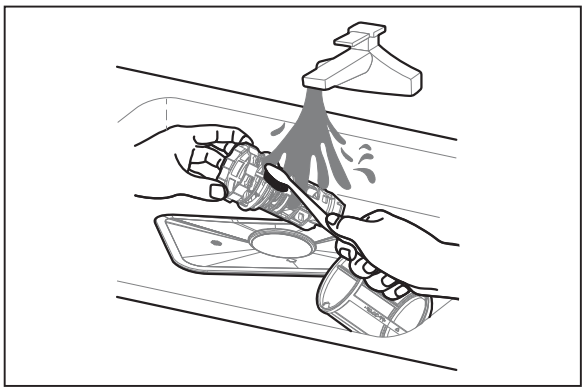

4. Reassemble the filters in the reverse order of the disassembly, replace the filter insert, and rotate clockwise to the close arrow.

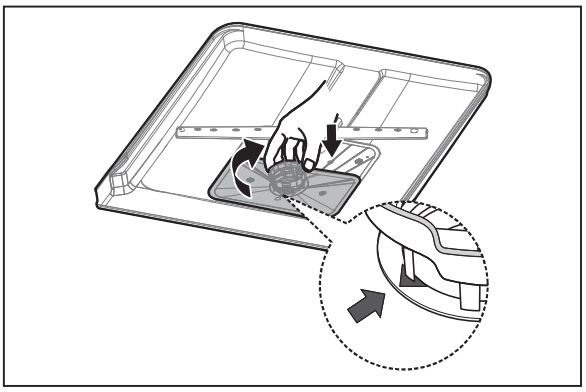

⚠ WARNING

Do not over tighten the filters. Put the filters back in sequence securely, otherwise coarse debris could get into the system and cause a blockage.
Never use the dishwasher without filters in place. Improper replacement of the filter may reduce the performance level of the appliance and damage dishes and utensils.

Spray arms

It is necessary to clean the spray arms regularly for hard water chemicals will clog the spray arm jets and bearings.
To clean the spray arms, follow the instructions below:

1. To remove the upper spray arm, hold the nut in the center still and rotate the spray arm counterclockwise to remove it.

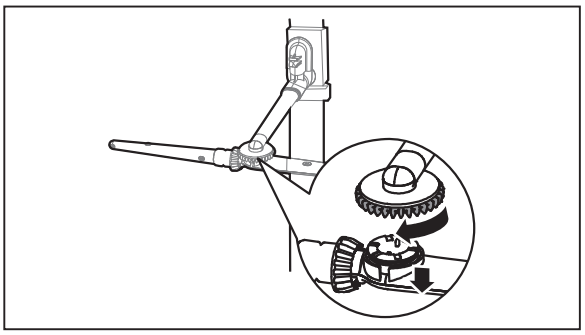

2. To remove the lower spray arm, pull out the spray arm upward.

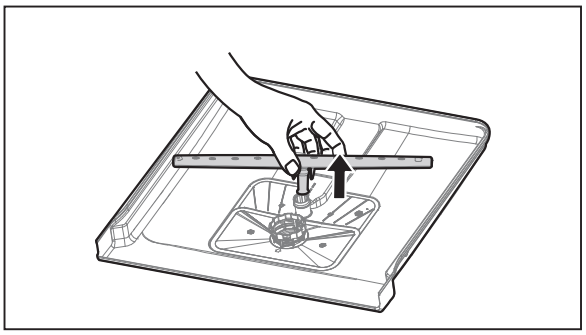

3. Wash the arms in soapy and warm water and use a soft brush to clean the jets.

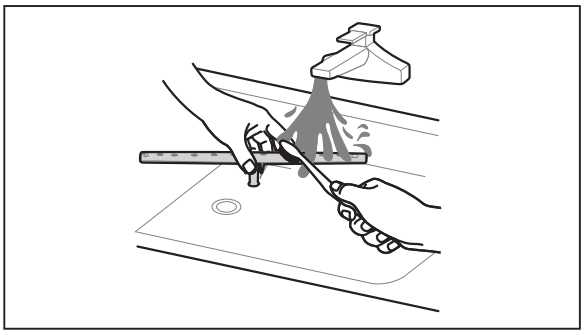

Caring For The Dishwasher

Frost precaution

Please take frost protection measures on the dishwasher in winter. Every time after washing cycles, please operate as follows:

1. Cut off the electrical power to the dishwasher at the supply source.
2. Turn off the water supply and disconnect the water inlet pipe from the water valve.
3. Drain the water from the inlet pipe and water valve. (Use a pan to gather the water)
4. Reconnect the water inlet pipe to the water valve.
5. Remove the filter at the bottom of the tub and use a sponge to soak up water in the sump.

After every wash

After every wash, turn off the water supply to the appliance and leave the door slightly open for a while so that moisture and odors are not trapped inside.

Remove the plug

Before cleaning or performing maintenance, always remove the plug from the socket.

No solvents or abrasive cleaning

To clean the exterior and rubber parts of the dishwasher, do not use solvents or abrasive cleaning products. Only use a cloth with warm soapy water.
To remove spots or stains from the surface of the interior, use a cloth dampened with water an a little vinegar, or a cleaning product made specifically for dishwashers.

When not in use for a long time

It is recommend that you run a wash cycle with the dishwasher empty and then remove the plug from the socket, turn off the water supply and leave the door of the appliance slightly open. This will help the door seals to last longer and prevent odors from forming within the appliance.

Moving the appliance

If the appliance must be moved, try to keep it in the vertical position. If absolutely necessary, it can be positioned on its back.

Seals

One of the factors that cause odours to form in the dishwasher is food that remains trapped in the seals. Periodic cleaning with a damp sponge will prevent this from occurring.

TROUBLESHOOTING

Before Calling For Service
Reviewing the charts on the following pages may save you from calling for service.

Problem	Possible reason	Solution
Dishwasher doesn't start	• Fuse blown, or the circuit break tripped.	Replace fuse or reset circuit breaker. Remove any other appliances sharing the same circuit with the dishwasher.
	• Power supply is not turned on.	Make sure the dishwasher is turned on and the door is closed securely. Make sure the power cord is properly plugged into the wall socket.
	• Water pressure is low	Check that the water supply is connected properly and the water is turned on.
	• Door of dishwasher not properly closed.	Make sure to close the door properly and latch it.
Water not pumped form dishwasher	• Twisted or trapped drain hose.	Check the drain hose.
	• Filter clogged.	Check the filter system.
	• Kitchen sink clogged.	Check the kitchen sink to make sure it is draining well. If the problem is the kitchen sink that is not draining , you may need a plumber rather than a serviceman for dishwashers.
Foam in the tub	• Wrong detergent.	Use only the special dishwasher detergent to avoid suds. If this occurs, open the dishwasher and let suds evaporate. Add 1 liter of cold water to the bottom of the dishwasher. Close the dishwasher door, then select any cycle. Initially, the dishwasher will drain out the water. Open the door after draining stage is complete and check if the suds have disappeared. Repeat if necessary.
	• Spilled rinse aid.	Always wipe up rinse aid spills immediately.
Stained tub interior	• Detergent with colourant may have been used.	Make sure that the detergent has no colourant.

Problem	Possible reason	Solution
There are rust stains on cutlery	• The affected items are not corrosion resistant.	Avoid washing items that are not corrosion resistant in the dishwasher.
	• A program was not run after dishwasher salt was added. Traces of salt have gotten into the wash cycle.	Always run a wash program without any crockery after adding salt. Do not select the Turbo function (if present), after adding dishwasher salt.
	• The lid of the softer is loose.	Check the softener lid is secure.
Knocking noise in the dishwasher	• A spray arm is knocking against an item in a basket	Interrupt the program and rearrange the items which are obstructing the spray arm.
Rattling noise in the dishwasher	• Items of crockery are loose in the dishwasher.	Interrupt the program and rearrange the items of crockery.
Knocking noise in the water pipes	• This may be caused by on-site installation or the cross-section of the piping.	This has no influence on the dishwasher function. If in doubt, contact a qualified plumber.
The dishes are not clean	• The dishes were not loaded correctly.	See the “Preparing And Loading Dishes”.
	• The program was not powerful enough.	Select a more intensive program.
	• Not enough detergent was dispensed.	Use more detergent, or change your detergent.
	• Items are blocking the movement of the spray arms.	Rearrange the items so that the spray can rotate freely.
	• The filter combination is not clean or is not correctly fitted in the base of wash cabinet. This may cause the spray arm jets to get blocked.	Clean and/or fit the filter correctly. Clean the spray arm jets.
Cloudiness on glassware.	• Combination of soft water and too much detergent.	Use less detergent if you have soft water and select a shorter cycle to wash the glassware and to get them clean.
White spots appear on dishes and glasses.	• Hard water area can cause limescale deposits.	Check water softener settings or fill status of salt container.

Problem	Possible reason	Solution
Black or grey marks on dishes	• Aluminium utensils have rubbed against dishes	Use a mild abrasive cleaner to eliminate those marks.
Detergent left in dispenser	• Dishes block detergent dispenser	Re-loading the dishes properly.
The dishes aren't drying	• Improper loading	Use gloves if detergent residue can be found on dishes to avoid skin irritations.
	• Dishes are removed too soon	Do not empty your dishwasher immediately after washing. Open the door slightly so that the steam can come out. Take out the dishes until the inside temperature is safe to touch. Unload the lower basket first to prevent the dropping water from the upper basket.
	• Wrong program has been selected.	With a short program, the washing temperature is lower, decreasing cleaning performance. Choose a program with a long washing time.
	• Use of cutlery with a low-quality coating.	Water drainage is more difficult with these items. Cutlery or dishes of this type are not suitable for washing in the dishwasher.

⚠ WARNING

Self-repair or non-professional repair may cause serious risks to the safety of the user of the appliance and impact warranty.

Availability Of Spare Parts

- Seven years after placing the last unit of the model on the market:
  Motor, circulation and drain pump, heaters and heating elements, including heat pumps (separately or bundled), piping and related equipment including all hoses, valves, filters and aqua stops, structural and interior parts related to door assemblies (separately or bundled), printed circuit boards, electronic displays, pressure switches, thermostats and sensors, software and firmware including reset software.
- Ten years after placing the last unit of the model on the market:
  Door hinge and seals, other seals, spray arms, drain filters, interior racks and plastic peripherals such as baskets and lids.

ERROR CODES

If there is a malfunction the dishwasher will display an error code. The following table shows possible error codes and their causes.

Problem	Possible reason	Solution
E1	• Longer inlet time.	Faucets is not opened, or water intake is restricted, or water pressure is too low.
E3	• Not reaching required temperature.	Malfunction of heating element.
E4	• Overflow.	Some element of dishwasher leaks.
E8	• Failure of orientation of distributary valve.	Open circuit or break of distributary valve.
E9	• Keep pressing a button more than 30 seconds.	Water or something on the button.
Ec	• Washing control system fail.	PCB or motor fail.
Ed	• Failure of communication between main circuit board with display circuit board.	Open circuit or break wiring for the communication

⚠ WARNING

- If overflow occurs, turn off the main water supply before calling a service.
- If there is water in the base pan because of an overfill or small leak, the water should be removed before restarting the dishwasher.
- If there is an error code that cannot be solved, please request professional assistance.

TRADEMARKS, COPYRIGHTS AND LEGAL STATEMENT

Midea logo, word marks, trade name, trade dress and all versions thereof are valuable assets of Midea Group and/or its affiliates ("Midea"), to which Midea owns trademarks, copyrights and other intellectual property rights, and all goodwill derived from using any part of an Midea trademark. Use of Midea trademark for commercial purposes without the prior written consent of Midea may constitute trademark infringement or unfair competition in violation of relevant laws.

This manual is created by Midea and Midea reserves all copyrights thereof. No entity or individual may use, duplicate, modify, distribute in whole or in part this manual, or bundle or sell with other products without the prior written consent of Midea.

All the described functions and instructions were up to date at the time of printing this manual. However, the actual product may vary due to improved functions and designs.

DISPOSAL AND RECYCLING

Important instructions for environment

Compliance with the WEEE Directive and Disposing of the Waster Product:
This product complies with EU WEEE Directive (2012/19/EU). This product bears a classification symbol for waster electrical and electronic equipment (WEEE).

This symbol indicates that this product shall not be disposed with other household wastes at the end of its service life. Used device must be returned to official collection point for recycling of electrical electronic devices. To find these collection systems please contact to your local authorities or retailer where the product was purchased. Each household performs important role in recovering and recycling of old appliance. Appropriate disposal of used appliance helps prevent potential negative consequences for the environment and human health.

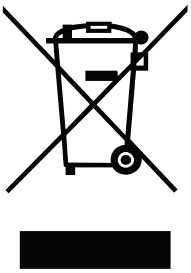

Compliance with RoHS Directive

The product you have purchased complies with EU RoHS Directive (2011/65/EU). It does not contain harmful and prohibited materials specified in the Directive.

Package information

Packaging materials of the product are manufactured from recyclable materials in accordance with our National Environment Regulations. Do not dispose of the packaging materials together with the domestic or other wastes. Take them to the packaging material collection points designated by the local authorities.

DATA PROTECTION NOTICE

For the provision of the services agreed with the customer,
we agree to comply without restriction with all stipulations of applicable data protection law, in line with agreed countries within which services to the customer will be delivered, as well as, where applicable, the EU General Data Protection Regulation (GDPR).

Generally, our data processing is to fulfil our obligation under contract with you and for product safety reasons, to safeguard your rights in connection with warranty and product registration questions. In some cases, but only if appropriate data protection is ensured, personal data might be transferred to recipients located outside of the European Economic Area.

Further information are provided on request. You can contact our Data Protection Officer via **MideaDPO@midea.com**. To exercise your rights such as right to object your personal date being processed for direct marketing purposes, please contact us via **MideaDPO@midea.com**. To find further information, please follow the QR Code.

DECLARATION OF CONFORMITY

RED Declaration of Conformity (DoC)

We,
Foshan Shunde Midea Washing Appliances Mfg. Co., Ltd.
No. 20, Gangqian Road, Beijiao, Shunde, Foshan, Guangdong, 528311 P.R.China
Declare under our sole responsibility that the product:
Product name: Dishwasher
Trade name: Midea
Type or model: MDWEF1433G(SS)-WUG-UK
Relevant supplementary information: .....
(e.g. lot, batch or serial number, sources and numbers of items)
To which this declaration relates is in conformity with the essential requirements and other relevant requirements of the RE Directive (2014/53/EU).
The product is in conformity with the following standards and/or other normative documents:
HEALTH & SAFETY (Art. 3(1)(a)):
EN 62311:2008, EN 50665:2017,
EN 60335-2-5:2015, EN 60335-1:2012/A2:2019,
EN 62233:2008
EMC (Art. 3(1)(b)): ETSI EN 301 489-17 V3.2.4 (2020-09) ,
ETSI EN 301 489-1 V2.2.3 (2019-11) , EN 55014-1:2017, EN 55014-2:2015,
EN IEC 61000-3-2:2019, EN 61000-3-3:2013/A1:2019
SPECTRUM (Art. 3(2)): ETSI EN 300 328 V2.2.2 (2019-07)
OTHER (incl. Art. 3(3) and voluntary specs):
.....
(title and/or number and date of issue of the standard(s) or other normative document(s))

Limitation of validity (if any): .....

Supplementary information:

Notified body involved:.....

Technical file held by:. Foshan Shunde Midea Washing Appliances Mfg. Co., Ltd.

Place and date of issue (of this DoC): .Foshan/2020-12-25.....

Signed by or for the manufacturer: .....
(Signature of authorised person)

Name (in print):.....Ke Ningsheng.....

Title:.....Product Engineer.....

Statement of compliance for UK PSTI

We Foshan Shunde Midea Washing Appliances Mfg. Co., Ltd.
hereby declare for below product that we meet mandatory below requirements and standards.

Brand: Midea

Product Name: Dishwasher

Product Model/type: MDWEF1433G(SS)-WUG-UK

Batch/serial no.: See the serial no. in the machine

Support period with end date Period: 3 years End date: 1st May 2027

The product meets the following requirements of PSTI Schedule 1 or Schedule2:

Clause	Requirements/Standards in PSTI we met
Passwords	☐ 1(1) to (4) of Schedule 1 ☑ 1(1) of Schedule 1 and 5.1-1&5.1-2 of ETSI EN 303645 v2.1.1(2020-06)
Information on how to report security issues	☐ 2(1) to (3) of Schedule 1 ☑ 2(1) of Schedule 1 and 5.2-1 of ETSI EN 303645 v2.1.1(2020-06) ☐ 2(1) and 2(3) of Schedule 1 and paragraph 6.2.2&6.2.5&6.5 of ISO/IEC 29147:2018(2018-10) &2(4) of Schedule 2
Information on minimum security update periods	☐ 3(1) to (6) of Schedule 1 ☑ 3(1)&3(3)&3(5)&3(6) of Schedule 1 and 3(3) to (4) of Schedule 2: 5.3-13 of ETSI EN 303645 v2.1.1(2020-06)

To which this Statement of compliance is presented, meeting the relevant requirements of 2023 No. 1007 The Product Security and Telecommunications Infrastructure (Security Requirements for Relevant Connectable Products) Regulations 2023, Schedule 2 Conditions for Deemed Compliance with Security Requirements based on product self-assessment.

Signed for and
on behalf of: Foshan Shunde Midea Washing Appliances Mfg. Co., Ltd

Address: No. 20, Gangqian Road, Beijiao, Shunde, Foshan, Guangdong, P.R.China

Name: Ke Ningsheng

Signature:

Function: Certification Engineer

Date of issue: 29st March 2024

Place of issue: Foshan, Guangdong , PEOPLE'S REPUBLIC OF CHINA

make yourself at home

Midea Home Appliances UK Ltd
16 Blackfriars St, Salford, Manchester, United Kingdom, M3 5BQ

www.midea.com

0000000000000000

此红框内丝印此用户手册对应的14位物料编码 红色框不需印刷
字体为Gotham-Book 8pt 位置大小严格按图纸操作