WORX NITRO

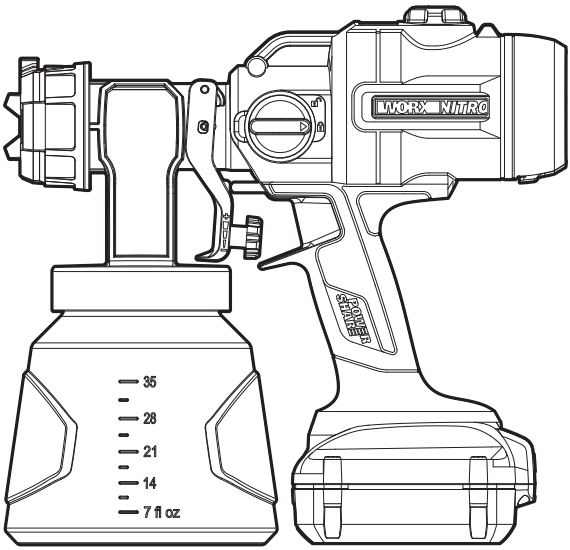

20V Cordless Brushless Paint Sprayer	**EN**	**P08**
Pulvérisateur de peinture à moteur sans balais et sans fil 20V	**F**	**P14**
Pulverizador de pintura de 20 V sin escobillas y sin cable	**ES**	**P20**

HELPLINE NUMBER
NUMÉRO DU SERVICE D'ASSISTANCE
NÚMERO DE LÍNEA DE AYUDA
1-866-354-WORX (9679)

WX020L WX020L.X

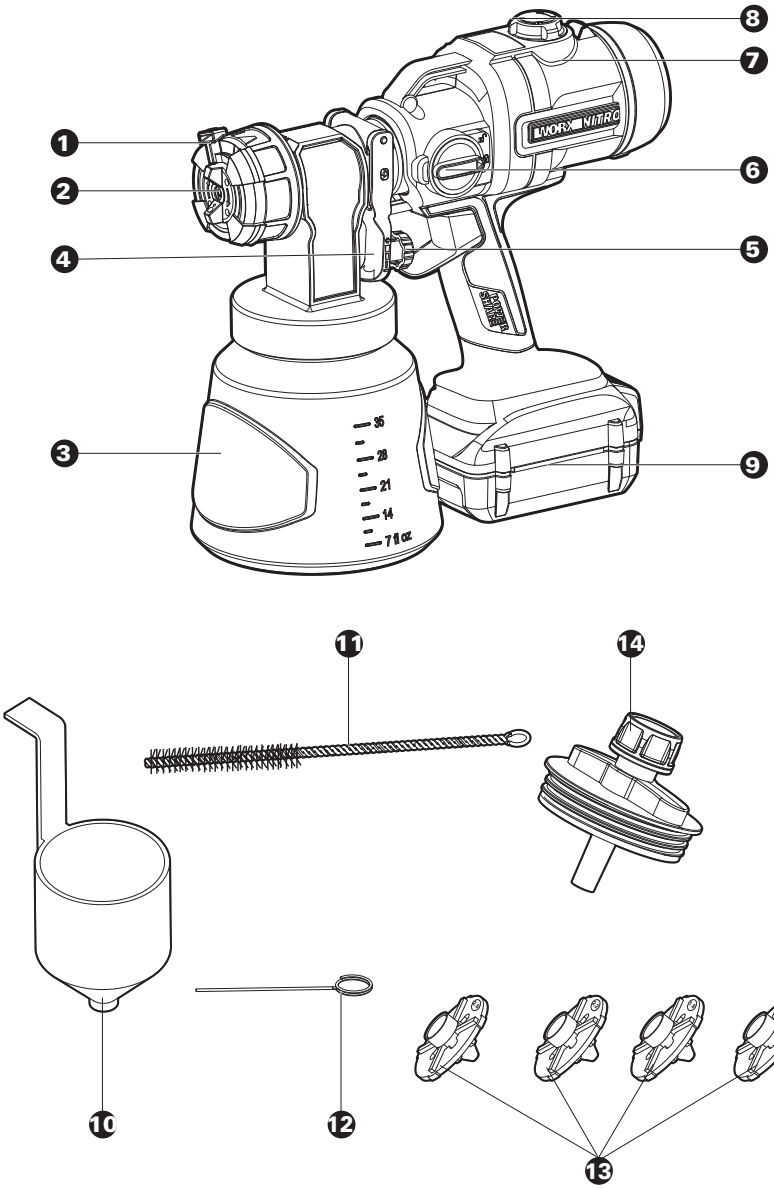
1
2
3
4
5
6
7
8
9
10
11
12
13
14
WORX NITRO
35
28
21
14
7 fl oz

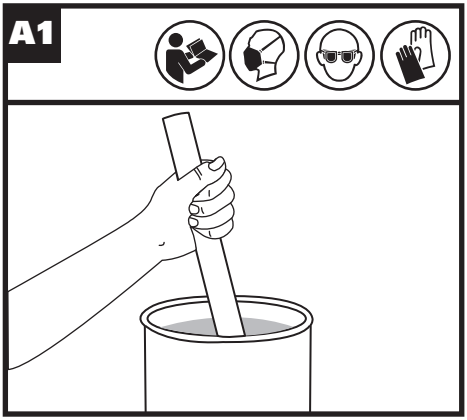
A1

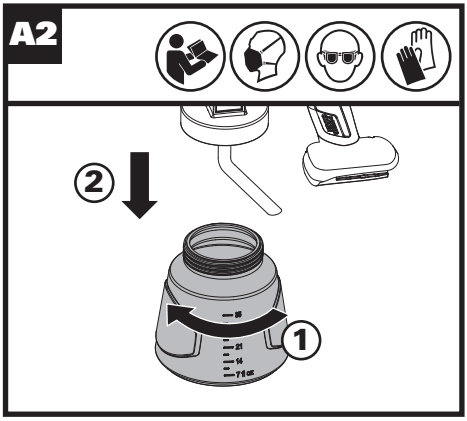
A2
2
1

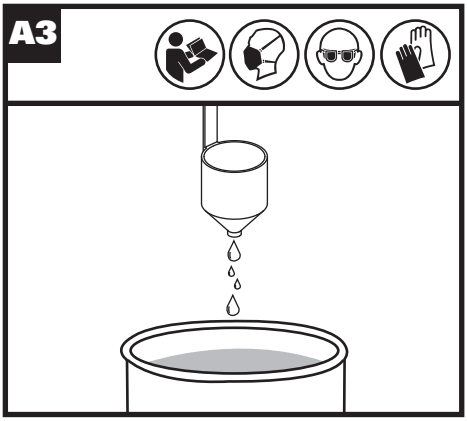
A3

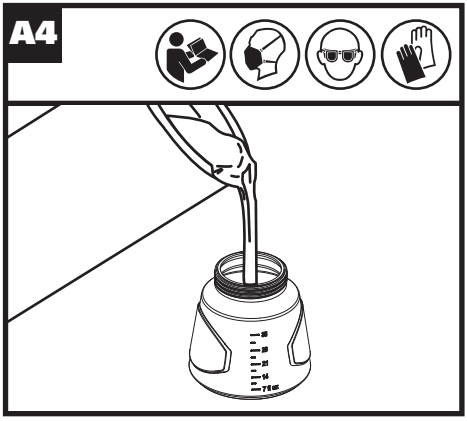
A4

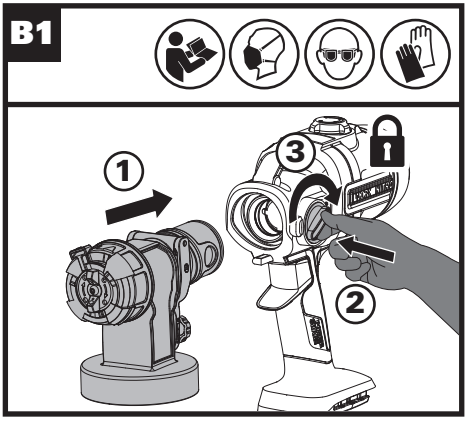
B1
1
3
2

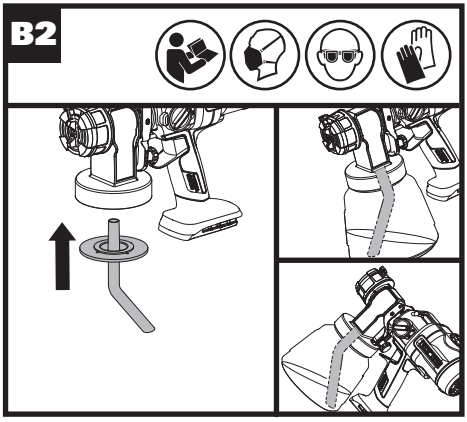
B2

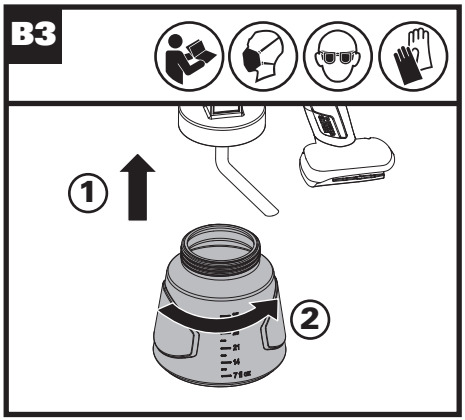
B3
1
2

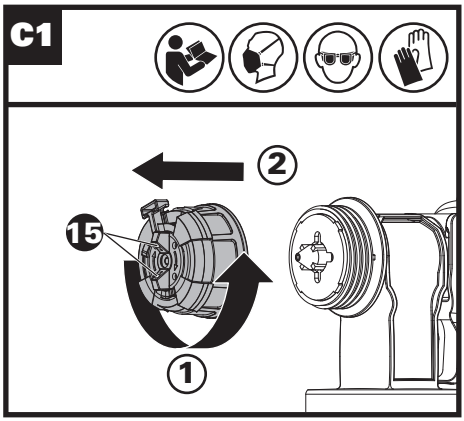
C1
2
15
1

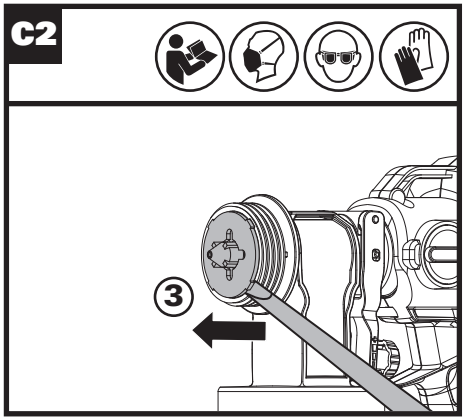
C2
3

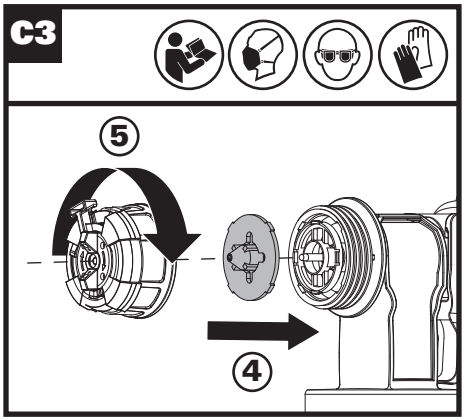
C3
5
4

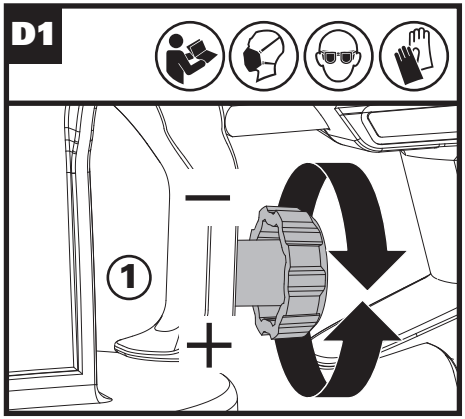
D1
1

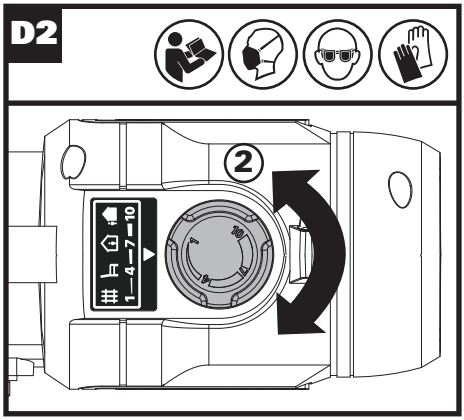
D2
2

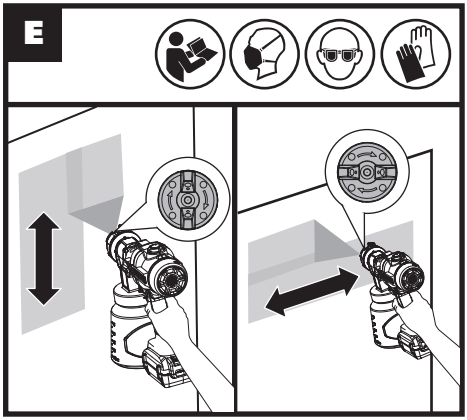
E

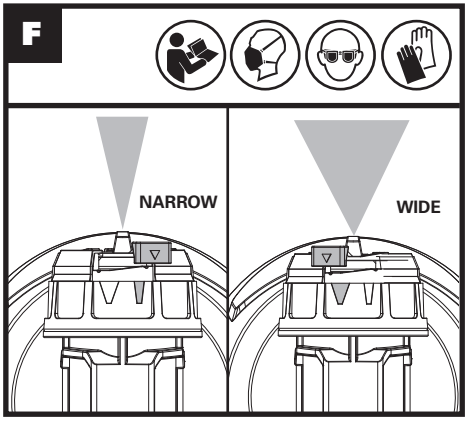
F
NARROW
WIDE

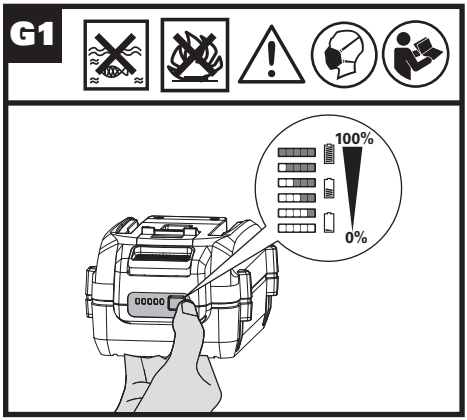
G1
100%
0%

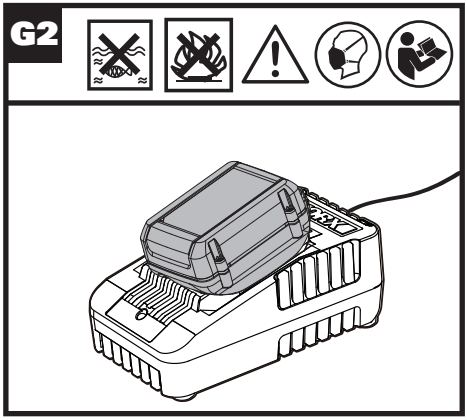
G2

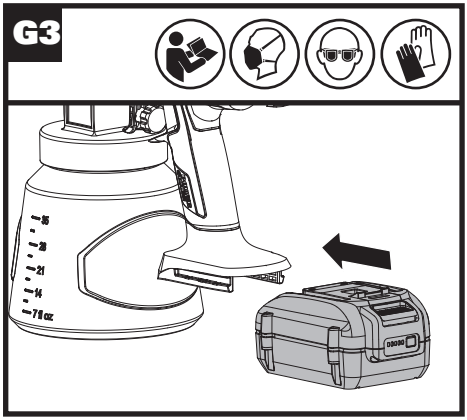
G3

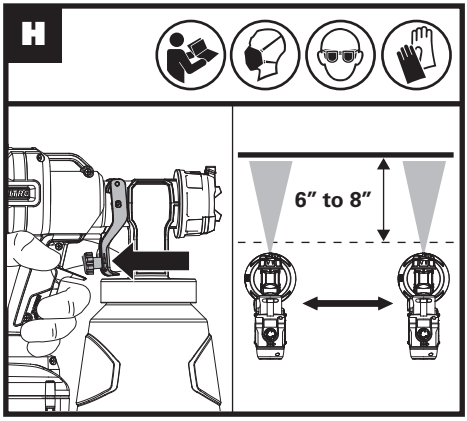
H
6” to 8”

I1

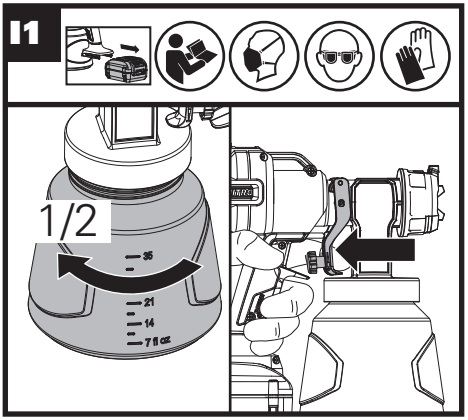

I2

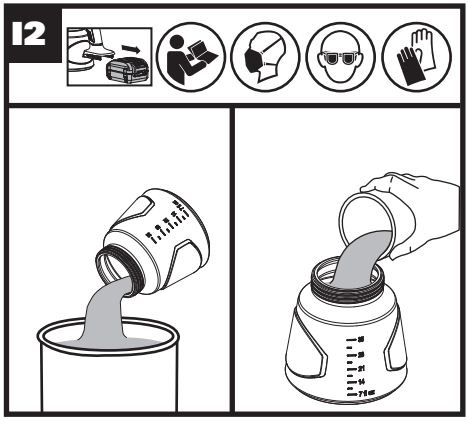

I3

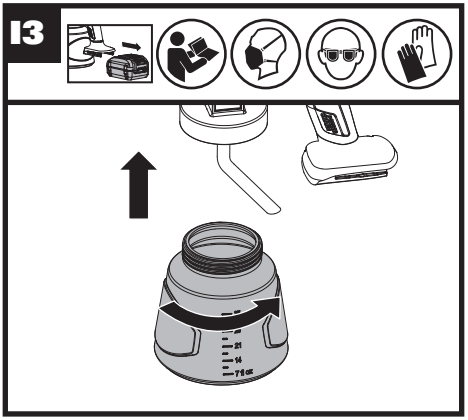

I4

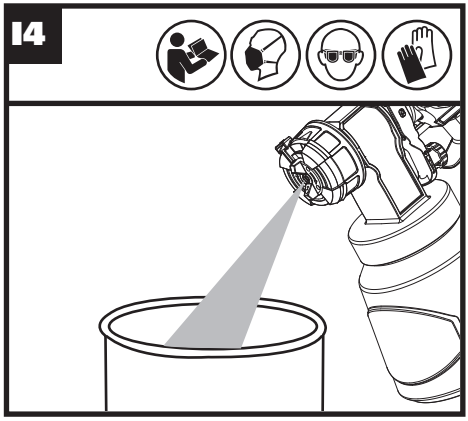

J1

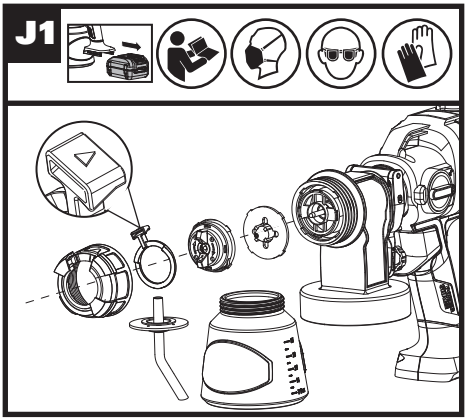

J2

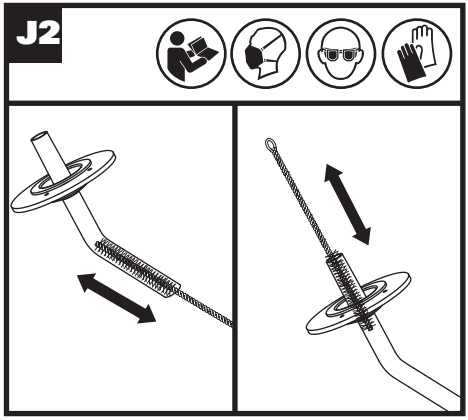

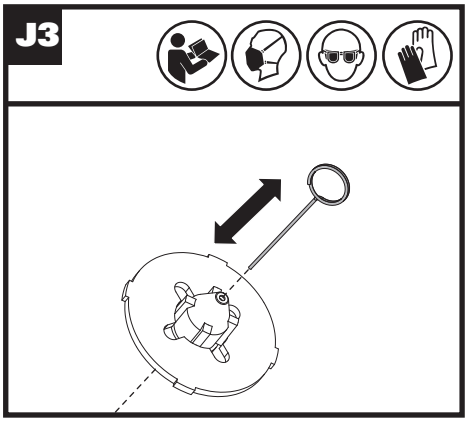
J3

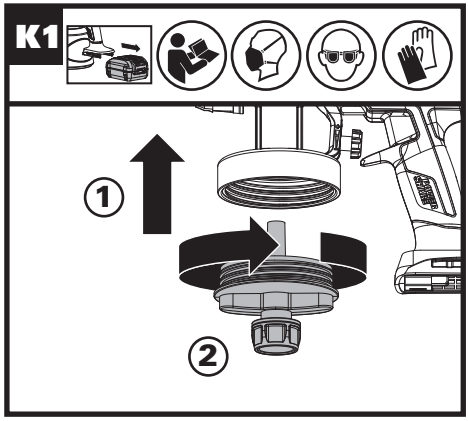
K1
1
2

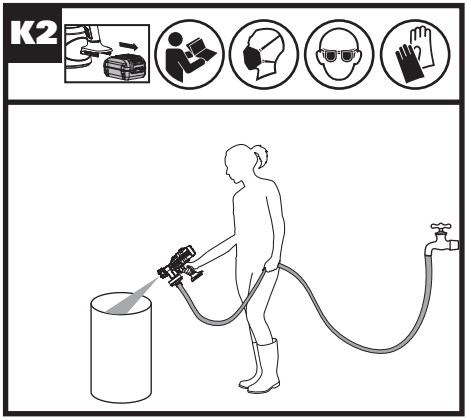
K2

TABLE OF CONTENTS

1. SAFETY INSTRUCTIONS
2. COMPONENT LIST
3. TECHNICAL DATA
4. CONTROLS AND FUNCTIONS
5. INTENDED USE
6. OPERATING INSTRUCTIONS
7. NOZZLE AND PRESSURE SELECTION
7. CLEANING
8. STORAGE
9. TROUBLESHOOTING

1. SAFETY INSTRUCTIONS

PRODUCT SAFETY

⚠ WARNING: This product can expose you to chemicals including lead and Di(2-ethylhexyl)phthalate (DEHP) which are known to the State of California to cause cancer and birth defects or other reproductive harm. For more information go to www.P65Warnings.ca.gov.

⚠ WARNING Read all safety warnings and all instructions. Failure to follow the warnings and instructions may result in electric shock, fire and/or serious injury.

Save all warnings and instructions for future reference.

1. Hot Surface — To reduce the risk of burns, do not touch.
2. To Reduce the Risk of Electric shock or Injury,
3. To reduce the risk of electric shock, Do not expose to rain. Store indoors.
4. Household Use Only.
5. Risk of Injury — Do not direct air stream at body.
6. When a combustible liquid is sprayed there can be danger of fire or explosion, especially in a closed area. Read instruction manua before operating.
7. Risk of Explosion — Do not spray flammable liquids.

SAFETY WARNINGS FOR BATTERY PACK

a) Do not dismantle, open or shred battery pack.
b) Do not expose battery pack to heat or fire. Avoid storage in direct sunlight.
c) Do not short-circuit a battery pack. Do not store battery packs haphazardly in a box or drawer where they may short-circuit each other or be short-circuited by other metal objects. When battery pack is not in use, keep it away from other metal objects, like paper clips, coins, keys, nails, screws or other small metal objects, that can make a connection from one terminal to another. Shorting the battery terminals together may cause burns or fire.
d) Do not subject battery pack to mechanical shock.
e) In the event of battery leaking, do not allow the liquid to come in contact with the skin or eyes. If contact has been made, wash the affected area with copious amounts of water and seek medical advice.
f) Do not use any battery pack which is not designed for use with the equipment.
g) Keep battery pack out of the reach of children.
h) Always purchase the battery pack recommended by the device manufacturer for the equipment.
i) Keep battery pack clean and dry.
j) Wipe the battery pack terminals with a clean dry cloth if they become dirty.
k) Battery pack needs to be charged before use. Always use the correct charger and refer to the manufacturer's instructions or equipment manual for proper charging instructions.
l) Do not leave battery pack on prolonged charge when not in use.
m) After extended periods of storage, it may be necessary to charge and discharge the battery pack several times to obtain maximum performance.
n) Recharge only with the charger specified by WorxNITRO. Do not use any charger other than that specifically provided for use with the equipment.
p) Retain the original product literature for future reference.
q) Use only the battery pack in the application for which it was intended.
r) Remove the battery pack from the equipment when not in use.
s) Dispose of properly.
t) Keep the battery away from microwaves and high pressure.

SYMBOLS

	Read Instruction Manual and All Markings Before Operating.
	Warning
	Wear eye protection
	Wear dust mask
	Protective gloves
	Make sure the battery is removed prior to changing accessories.
	Batteries may enter water cycle if disposed improperly, which can be hazardous for ecosystem. Do not dispose of waste batteries as unsorted municipal waste.
	Do not burn
	Li-Ion battery, battery must be recycled



call2recycle®

POSITEC Inc. has established a partnership with the RBRC Corporation to recycle any Positec batteries with the RBRC-call2recycle seal. For environmental protection, please do not discard batteries in the trash. After the batteries' life cycle is ended, then please call 1-800-822-8837 for a free service that will properly dispose of the battery.

2. COMPONENT LIST

1.	SPRAY WIDTH LEVER
2.	AIR CAP
3.	MATERIAL CONTAINER
4.	TRIGGER
5.	VOLUME KNOB
6.	LOCK ON/OFF DIAL
7.	TURBINE
8.	AIR FLOW CONTROL
9.	BATTERY PACK*
10.	VISCOSITY CUP
11.	WIRE BRUSH
12.	DECLOGGING NEEDLE
13.	NOZZLE*
14.	GARDEN HOSE ADAPTER
15.	AIR CAP EAR(SEE FIG. C1)

***Not all the accessories illustrated or described are included in standard delivery.**

3. TECHNICAL DATA

	WX020L WX020L.X**
Rated voltage	20 V ⎓ Max***
Maximum pressure	3 PSI(20 KPa)
Machine weight (bare tool)	2.23 lbs(1.01 kg)

** X may be followed by one or two characters. All models are the same except model number and trademark. The suffix in models may be number from "1" to "999" or English letter "A" to "Z" or "M1" to" M9" which means different package or the various of accessories packed in the package.

***Voltage measured without workload. Initial battery voltage reaches maximum of 20 volts. Nominal voltage is 18 volts.

Category	Type	Capacity
20V Battery	WA3012	4.0Ah
20V Charger	WA3881	2.0A

We recommend that you purchase your accessories from the same store that sold you the tool. Refer to the accessory packaging for further details. Store personnel can assist you and offer advice.

4. CONTROLS AND FUNCTIONS

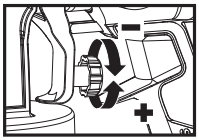

Volume knob
Set the material flow by turning the volume knob on the trigger of the sprayer

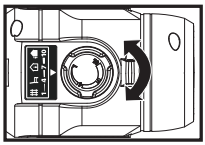

Air flow control
The air flow can be adjusted from 1-10 by turning the air flow control.

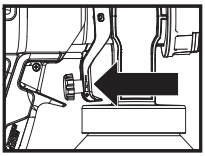

Trigger
Pull the trigger to deliver spray material from the material container to the nozzle assembly, where it is sprayed.

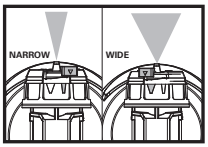

Spray Width Lever
The spray width lever determines the width of the spray pattern.

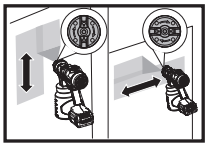

Air cap ear
Adjust the spray pattern by turning the air cap ears.
Horizontal pattern ('up and down' spraying motion)
Vertical pattern ('side to side' spraying motion)

5. INTENDED USE

Interior and exterior painting and staining of decks, outdoor furniture, fences, and walls

6. OPERATING INSTRUCTIONS

NOTE: Please read the instructions carefully before use.

ASSEMBLY AND OPERATION

ACTION	FIGURE
BEFORE OPERATION	
Material preparation - Stir the spraying material thoroughly. - Unscrew the container . - Fill the material container to desired level when the material has been appropriately thinned**** and strained.	See Fig. A1, A2,A3,A4
Turbine assembly **NOTE :**Press and turn lock on/off dial clockwise to lock on during operation.	See Fig. B1
Suction tube assembly - Tube end should be facing toward the front of nozzle if spraying downward - Tube end should be facing toward the rear of nozzle if spraying upward	See Fig. B2
Container assembly **NOTE:** Make sure the container is tightened firmly.	See Fig. B3
Material Flow setting	
Selecting the right nozzle according to your work Use the srewdriver(not supplied) to take out the nozzle and replace it with the right one according to your work. **NOTE :**The smaller the diameter of nozzle is,the more delicate work it can deal with.	See Fig. C1,C2,C3
Setting the volume -Turn the volume knob on the trigger clockwise to increase the volume. -Turn the volume knob on the trigger counter-clockwise to decrease the volume.	See Fig. D1
Adjusting the air flow Turn the air flow control from 1-10 according to your work .	See Fig. D2
Spray pattern adjustment	

Adjusting spray shape -Horizontal pattern ('up and down' spraying motion) - Vertical pattern('side to side'spraying motion)	See Fig. E
Adjusting spray width -Wide pattern (for spraying large surfaces) -Narrow pattern(For spraying smaller areas, corners and edges)	See Fig.F
OPERATION	
Checking the battery charge condition **NOTE:** Fig. G1 only applies for the battery pack with battery indicator light.	See Fig. G1
Charging the battery pack	See Fig.G2
Installing the battery pack	See Fig.G3

Press the trigger **USER TIPS** 1. Position the tool six (6) to eight (8) inches from the spray pattern size desired .Spray parallel to the surface with smooth passes at a consistent speed. 2. Apply a thin layer of material on the first pass and allow to dry before applying a second, slightly heavier coat. 3. It is recommended to partially pull trigger first in order to start the turbine before a spray pass is made.	See Fig. H

****It is not necessary for most materials when used with the nozzle of larger diameter. For use with the nozzle of smaller diameter , thinning may be needed to acheive a finer finish.If thinning is necessary, use the Viscosity cup to adjust as you need(See Fig.A3).

7. NOZZLE AND PRESSURE SELECTION

See table for recommended spray pressure for your material.

	Materials					
	Interior Stains/ Interior & Exterior Clears	Exterior Solid Stains	Primers	Enamels	Interior Latex Paints	Exterior Latex Paints
Speed control	1-5	6-10	6-10	6-10	6-10	6-10
Nozzles size						
0.06''(1.5 mm)	✓	✓				
0.07''(1.8 mm)	✓	✓				
0.09''(2.2 mm)			✓	✓	✓	
0.1''(2.6 mm)			✓	✓	✓	✓

8. CLEANING

Note: When cleaning, use appropriate cleaning solutions (warm, soapy water for latex materials; mineral spirits for oil-based materials).

UNIT FLUSHING (SEE FIG. I1, I2, I3,I4)
Remove the battery pack.For relieving any pressure left over in the too, loosen the container by 1/2 turn ,but not totally remove it .
Pull the trigger so that the material inside the nozzle drains back into the container.Unscrew the container and remove. Empty any remaining material back into the material bucket.Pour a small amount of the appropriate cleaning solution into the container.Assemble the container and install the battery pack.Spray the cleaning solution into a safe area.
Remove the battery pack. For relieving any pressure left over in the too, loosen the container by 1/2 turn ,but not totally remove it . Pull the trigger so that the material inside the nozzle drains back into the container.

SUCTION TUBE AND NOZZLE CLEANING(SEE FIG. J1, J2, J3)
Remove the battery pack.Unscrew the nut and remove the air cap and nozzle.Use declogging needle to clean the nozzle and wire brush to clean suction tube.

QUICK CLEANING WITH GARDEN HOSE (FOR WATER PAINT ONLY) (SEE FIG. K1 ,K2)
Remove the battery pack and container.Assemble the garden hose adapter to the tool. Connect one end of the garden hose to the adapter and another end to the waterspout.Press the trigger to have a quick clean .

9. STORAGE

Always store your power tool in a dry place. Keep the motor ventilation slots clean. Keep all working controls free of dust. Occasionally you may see sparks through the ventilation slots. This is normal and will not damage your power tool.

10. TROUBLESHOOTING

Issue	Causes	Solutions
Little or no material flow	1. Nozzle clogged. 2. Suction tube clogged. 3. Material flow sets too low. 5. Suction tube loose. 6. No pressure builds up in container. 7. Spray material is too thick.	1. Clean. 2. Clean. 3. Increase material flow setting. 5. Remove and replace as tightly as possible. 6. Tighten container. 7. Thin****.
Material is leaking	1. Nozzle loose. 2. Nozzle worn. 3. Material build-up on air cap and nozzle	1. Tighten. 2. Replace. 3. Clean.
Spray pattern is too thick, runs and sags	1. Material flow sets too high. 3. Applying too much material. 4. Nozzle is clogged. 6. Too little pressure builds up in container. 7. Spray material is too thick.	1. Decrease material flow setting. 3. Adjust material flow or increase movement of spray gun. 5. Change. 6. Tighten container. 7. Thin****.
Spray jet pulsates	1. Material in container runs out.	1. Refill.
Too much overspray	1. Gun is too far from spray object.	1. Reduce distance (6"-8" is ideal).
Pattern is very light and spotted	1. Moving the spray gun too fast. 2. Material flow setting too low.	1. Adjust material flow or decrease movement of spray gun. 2. Increase material flow setting.