QUADLOGIC QCom NOTES AND SPECIFICATIONS:

1. THE QCom HAS THREE HALF DUPLEX (2 WIRE) RS-485 MODBUS PORTS.
2. QCom MAY HAVE A MAXIMUM 480 METERING POINTS SHARED ACROSS THE THREE RS-485 PORTS TOTALING APPROXIMATELY (80 QBrick, 80 QLIC, 20 miniQloset24, OR 30 miniQloset16 METERS).
3. FOR HARDWIRED SYSTEMS, A RS-485 REPEATER MUST BE INSTALLED AFTER EVERY 16TH DEVICE TO BOOST THE COMMUNICATION SIGNAL ACROSS THE BUS.
4. ALL METERS AND REPEATERS MUST BE DAISY CHAINED TOGETHER ON THEIR RESPECTIVE RS-485 BUS.

PREFERRED INSTALLATION GUIDELINES FOR 2W RS-485 BUS :

- USE #22 AWG SHIELDED TWISTED PAIR WIRE OR LARGER WITH A RUN NO LONGER THAN 3000 FEET.
- WIRE OPTIONS INCLUDE:
  - 2-WIRE, NO SIGNAL GROUND: BELDEN 3105A OR EQUIVALENT.
  - 2-WIRE, WITH SIGNAL GROUND: BELDEN 3106A OR EQUIVALENT.
- #24 AWG CAN BE USED BUT SHOULD ONLY BE LIMITED TO A MAX RUN OF 2000 FEET.
- CAT-5 CABLE CAN ONLY BE USED FOR RUNS UNDER 500 FEET IN A LOW ELECTRICAL NOISE ENVIRONMENT.
- CONNECT ALL SHIELDS TOGETHER THROUGHOUT THE RUN. CONNECT THE SHIELD TO THE SYSTEM GROUND AT ONLY A SINGLE POINT ON A SINGLE RS485 NETWORK.

PERFORMANCE RECOMMENDATIONS FOR CABLES RUN OVER 3000 FEET OR LONGER:

- FOR BUS LENGTHS OVER 3000 FEET, THE CABLE MUST HAVE A CHARACTERISTIC IMPEDANCE OF 120Ω OR TERMINATED WITH A 120Ω RESISTOR AND BIAS INSTALLED. NOTE THAT THIS STEP CAN BE DONE LAST, AND ONLY IF TESTING INDICATES THAT IT IS NECESSARY.
- THE RS485 BUS MUST HAVE A DIFFERENTIAL VOLTAGE OF AT LEAST 200mV WHEN NO UNITS ARE TRANSMITTING.
- IF AN EXTERNAL BIAS SUPPLY IS REQUIRED, ADD A 5VDC POWER SUPPLY CONNECTED TO THE DATA LINES. EACH LEAD FROM THE POWER SUPPLY (POSITIVE AND NEGATIVE) SHOULD HAVE A 470Ω RESISTOR IN SERIES CONNECTED TO IT.
- IF THE GROUND IS CONNECTED TO PREVENT NOISE, THE CABLE USED MUST HAVE AN ADDITIONAL CONDUCTOR. IT IS NOT CORRECT TO USE THE SHIELD IN ORDER TO INTERCONNECT THE SIGNAL GROUNDS OF THE DEVICES. INSTEAD, THE CABLE USED MUST PROVIDE AN ADDITIONAL SEPARATE CONDUCTOR WHICH IS CONNECTED TO SIGNAL GROUND AT EACH DEVICE. NOTE THAT THE SHIELD SHOULD BE CONNECTED TO THE GROUND AT ONLY ONE POINT, SO THE SHIELD IS NOT APPROPRIATE AS THE SIGNAL GROUND CONNECTION.

QUADLOGIC QCom Meter Data Hub With Enclosure

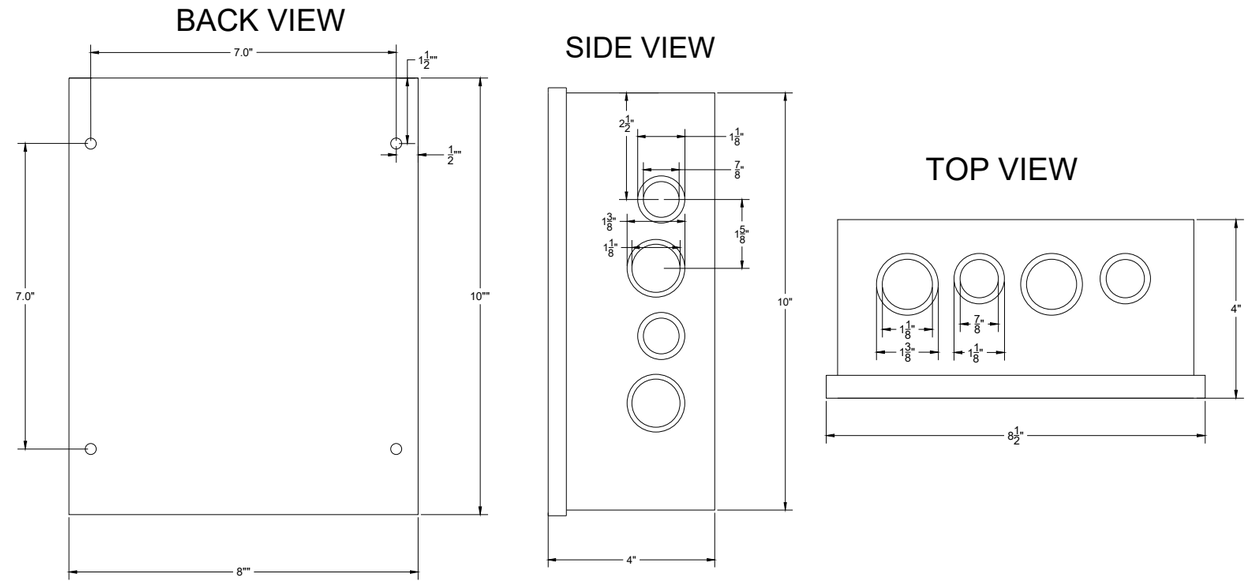

Front View

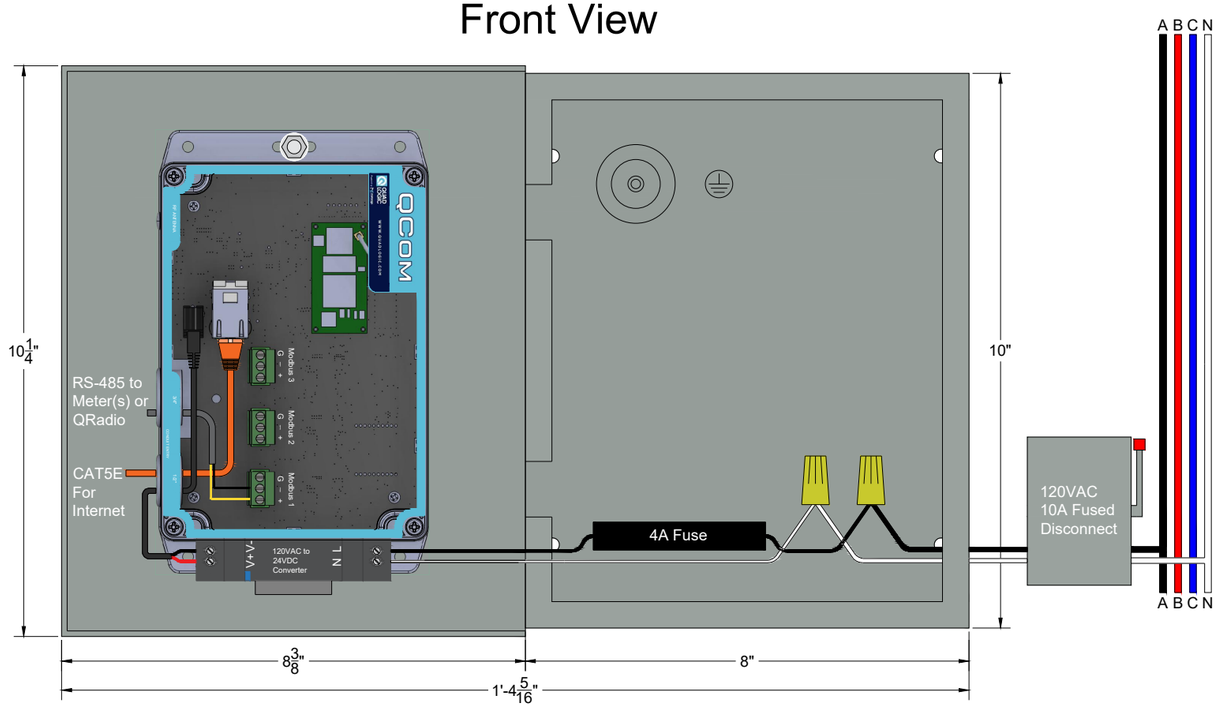

Detail 12 QCom METERING WIRING CONNECTIONS AND DIMENSIONS

COMMON AREA METER SCHEDULE

ELECTRICITY	SUB-METERS
RESIDENTIAL	301
ASHRAE	350

No.	DATE	DESCRIPTION	BY
1	2024.09.24	INITIAL DRAFT	RL

DESTROY ALL DRAWINGS DATED PREVIOUS TO FINAL DATE ABOVE

REVISIONS

THESE DRAWINGS ARE THE PROPERTY OF METERGY SOLUTIONS & SHALL BE RETURNED UPON REQUEST:
30-30 47th Avenue, Suite 540, Long Island City, NY, 11101

DRAWING IS BASED ON ELECTRICAL & MECHANICAL DRAWINGS PREPARED BY:

PROJECT:
TEST SITE
43-14 QUEENS STREET
LONG ISLAND CITY, NY 11101

TITLE: QCom DATA COLLECTOR DETAILS

DRAWN BY: METERGY SOLUTIONS

GL NO.: 21154

SCALE: N.T.S.

DATE: 2024-09-05

DRAWING NO.: MSI-E-09