Owner's Manual & Safety Instructions

Save This Manual Keep this manual for the safety warnings and precautions, assembly, operating, inspection, maintenance and cleaning procedures. Write the product's serial number in the back of the manual near the assembly diagram (or month and year of purchase if product has no number). Keep this manual and the receipt in a safe and dry place for future reference. 22j

CENTRAL® MACHINERY

6" SWIVEL VISE



59104

Visit our website at: http://www.harborfreight.com
Email our technical support at: productsupport@harborfreight.com

When unpacking, make sure that the product is intact and undamaged. If any parts are missing or broken, please call 1-888-866-5797 as soon as possible.

Copyright© 2021 by Harbor Freight Tools®. All rights reserved.
No portion of this manual or any artwork contained herein may be reproduced in any shape or form without the express written consent of Harbor Freight Tools.
Diagrams within this manual may not be drawn proportionally. Due to continuing improvements, actual product may differ slightly from the product described herein.
Tools required for assembly and service may not be included.

⚠WARNING

Read this material before using this product.
Failure to do so can result in serious injury.
SAVE THIS MANUAL.

Specifications

Base Type	360° Swivel Base
Jaw Opening	6″ Maximum
Throat Depth	2-3/8"
Anvil Size	3-3/4″ x 3-3/8″
Base	6-1/2" x 6-1/2"

Important Safety Information

1. Mount before use according to these instructions. Improper mounting can create hazards.
2. Wear ANSI-approved safety goggles and heavy-duty work gloves during mounting and use.
3. Keep work area clean and well lit.
4. Keep bystanders out of the area during use.
5. Verify that installation surface has no hidden utility lines before drilling or driving bolts.
6. Do not use when tired or when under the influence of alcohol, drugs or medication.
7. This product is not a toy. Do not allow children to play with or near this item.
8. Use as intended only.
9. Inspect before every use; do not use if parts are loose or damaged.
10. Maintain product labels and nameplates. These carry important safety information. If unreadable or missing, contact Harbor Freight Tools for a replacement.
11. When working with the Anvil, do not strike with a hardened tool. It could chip the Anvil and/or the tool.
12. Damage could occur to your vise and/or workpiece if you overtighten the Handle.

SAVE THESE INSTRUCTIONS.

PLEASE READ THE FOLLOWING CAREFULLY

THE MANUFACTURER AND/OR DISTRIBUTOR HAS PROVIDED THE PARTS LIST AND ASSEMBLY DIAGRAM IN THIS DOCUMENT AS A REFERENCE TOOL ONLY. NEITHER THE MANUFACTURER OR DISTRIBUTOR MAKES ANY REPRESENTATION OR WARRANTY OF ANY KIND TO THE BUYER THAT HE OR SHE IS QUALIFIED TO MAKE ANY REPAIRS TO THE PRODUCT, OR THAT HE OR SHE IS QUALIFIED TO REPLACE ANY PARTS OF THE PRODUCT. IN FACT, THE MANUFACTURER AND/OR DISTRIBUTOR EXPRESSLY STATES THAT ALL REPAIRS AND PARTS REPLACEMENTS SHOULD BE UNDERTAKEN BY CERTIFIED AND LICENSED TECHNICIANS, AND NOT BY THE BUYER. THE BUYER ASSUMES ALL RISK AND LIABILITY ARISING OUT OF HIS OR HER REPAIRS TO THE ORIGINAL PRODUCT OR REPLACEMENT PARTS THERETO, OR ARISING OUT OF HIS OR HER INSTALLATION OF REPLACEMENT PARTS THERETO.

Record Serial Number Here: _____

Note: If product has no serial number, record month and year of purchase instead.

Note: Some parts are listed and shown for illustration purposes only, and are not available individually as replacement parts. Specify number when ordering.193175454812.

Mounting Instructions

⚠ **WARNING! TO PREVENT SERIOUS INJURY:** Verify that installation surface has no hidden utility lines before drilling or driving bolts.

1. Place Vise on flat, solid surface capable of supporting weight of Vise and workpiece.
2. Using Vise as template, mark four mounting holes.
3. Drill appropriated size holes for bolts (sold separately).
4. Secure Vise with appropriate bolts, washers and nuts (sold separately).

Operation Instructions

1. Loosen the two Base Handles to allow the Base to pivot. Tighten the Base Handles before working.
2. Turn Handle counterclockwise to open Jaws.
3. Place workpiece inside Jaws.

CAUTION! Keep fingers away from Jaws while tightening them.

4. Turn Handle clockwise to tighten Jaws against workpiece until it is held securely. Do not overtighten.

Maintenance

1. Keep moving parts lubricated. Wipe off excess lubricant on Handle and Jaws.
2. Keep Jaws clean. Remove Jaws for cleaning by removing Screws.
3. Periodically, check and tighten mounting hardware.

Parts List and Diagram

Part	Description	Qty
1	Fixed base	1
2	Jaws	2
3	Locking T-Handles	2
4	Swivel Base	1
5	Handle	1
6	Anvil	1

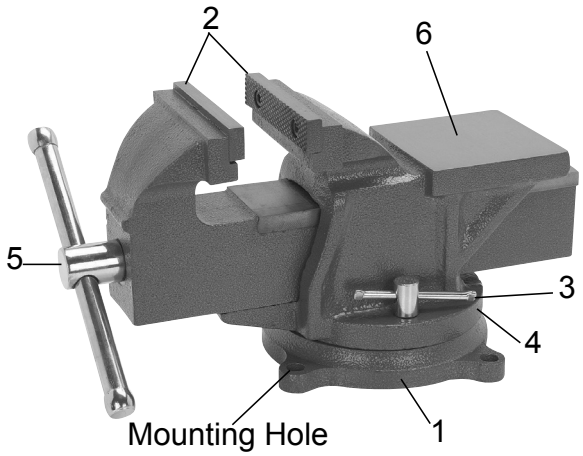

Limited 90 Day Warranty

Harbor Freight Tools Co. makes every effort to assure that its products meet high quality and durability standards, and warrants to the original purchaser that this product is free from defects in materials and workmanship for the period of 90 days from the date of purchase. This warranty does not apply to damage due directly or indirectly, to misuse, abuse, negligence or accidents, repairs or alterations outside our facilities, criminal activity, improper installation, normal wear and tear, or to lack of maintenance. We shall in no event be liable for death, injuries to persons or property, or for incidental, contingent, special or consequential damages arising from the use of our product. Some states do not allow the exclusion or limitation of incidental or consequential damages, so the above limitation of exclusion may not apply to you. THIS WARRANTY IS EXPRESSLY IN LIEU OF ALL OTHER WARRANTIES, EXPRESS OR IMPLIED, INCLUDING THE WARRANTIES OF MERCHANTABILITY AND FITNESS.

To take advantage of this warranty, the product or part must be returned to us with transportation charges prepaid. Proof of purchase date and an explanation of the complaint must accompany the merchandise. If our inspection verifies the defect, we will either repair or replace the product at our election or we may elect to refund the purchase price if we cannot readily and quickly provide you with a replacement. We will return repaired products at our expense, but if we determine there is no defect, or that the defect resulted from causes not within the scope of our warranty, then you must bear the cost of returning the product.

This warranty gives you specific legal rights and you may also have other rights which vary from state to state.

CENTRAL®
MACHINERY

26677 Agoura Road • Calabasas, CA 91302 • 1-888-866-5797