Parts:

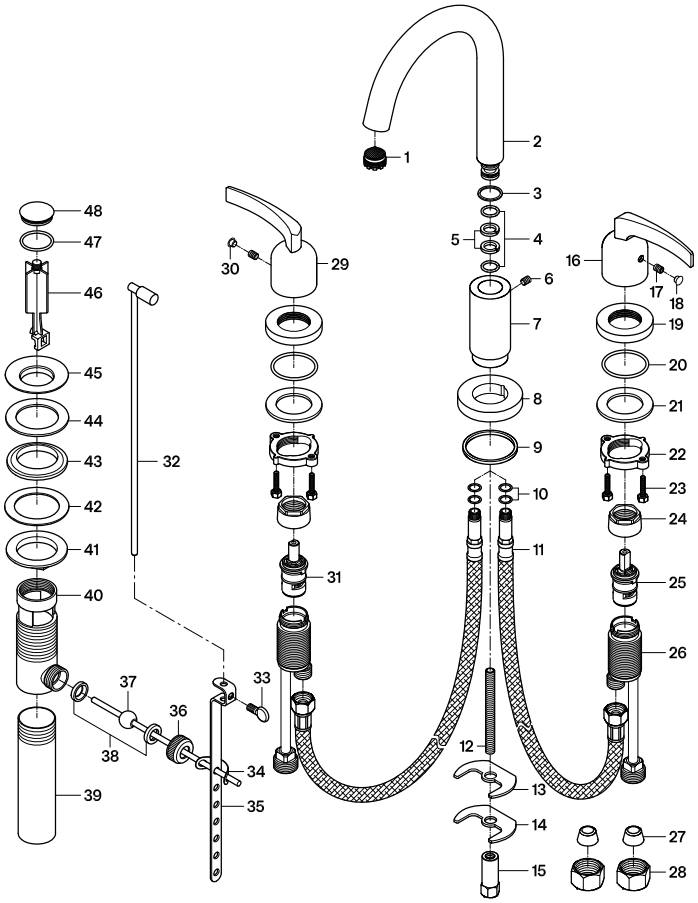

Replacement Parts:

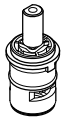

Hot Cartridge:
FSCRP1971HC

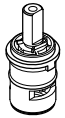

Cold Cartridge:
FSCRP1971CC

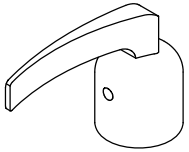

Hot Handle: KBH8961EFLH

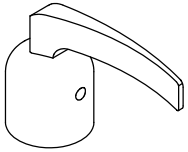

Cold Handle: KBH8961EFLC

KINGSTON

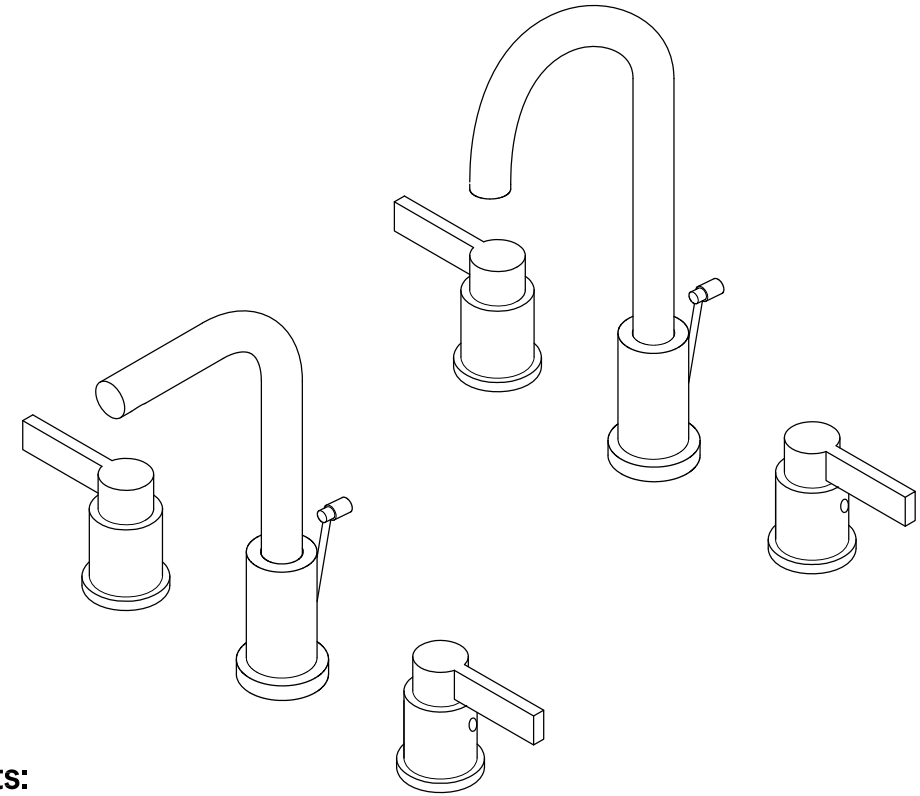

Parts:

Metal Washer & Rubber Washer	Lock Nut	Cone Washer & Coupling Nut	Washer & Screw & Metal Nut	Pop-Up
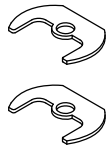		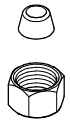	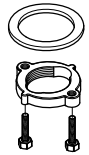	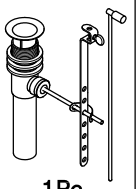
1 Pc	1 Pc	2 Pcs	2 Pcs	1 Pc

CARE AND MAINTENANCE OF YOUR FAUCET

Your KINGSTON faucet has been finished to the most strict standards; however, due to the high content of minerals in the water, your finish may appear dull and tarnished after time. These are some do's and don'ts to maintain the luster on your faucet for many years to come.

DO
1. Use a silicon based caulking when installing.
2. Clean your faucet with only a mild soap and water solution.
3. Dry your faucet after using it.
4. Give it a coat of Carnauba Wax periodically.

DON'T
1. Use plumbers putty when installing the faucet.
2. Use any abrasive cleaning agents.

It may seem like a very simple and short list but it is that simple to maintain your faucet, looking shiny and new.

If your faucet is already looking somewhat dull and tarnished, before replacing it, try cleaning it with a 50/50 solution of vinegar and water, you may need to soak some rags and wrap around those stubborn areas, leave
overnight and rinse completely in the morning, apply Carnauba wax once you have removed the mineral deposits.

NOTICE

Failure to follow all directions may cause leaks which may result in water damage

www.kingstonbrass.com

TOLL-FREE CUSTOMER SERVICE: 1-877-2-KBRASS
TECHNICAL SUPPORT E-mail: service@kingstonbrass.com
12775 Reservoir Street, Chino, CA 91710

KINGSTON

INSTALLATION INSTRUCTIONS
Widespread Lavatory Faucet with Pop-Up

BEFORE BEGINNING INSTALLATION:

1. Flush plumbing lines to clear any debris.
2. Shut off both supply lines after flushing.

Need Tools:

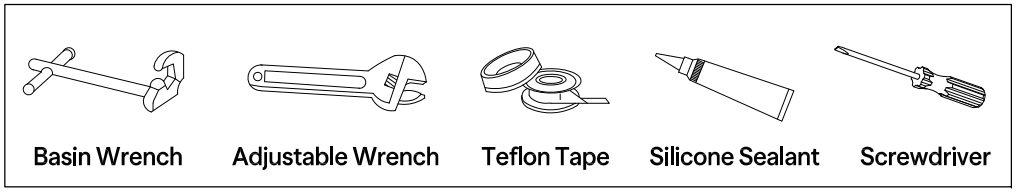

1

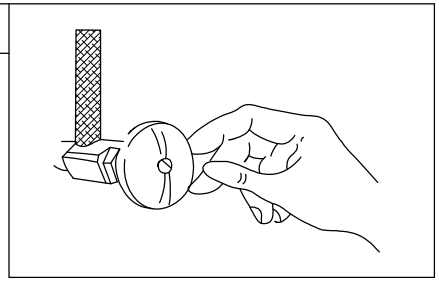

1. Shut off hot and cold water supply under sink. Plug sink drain with cloth to avoid losing small parts. Remove old faucet.

2

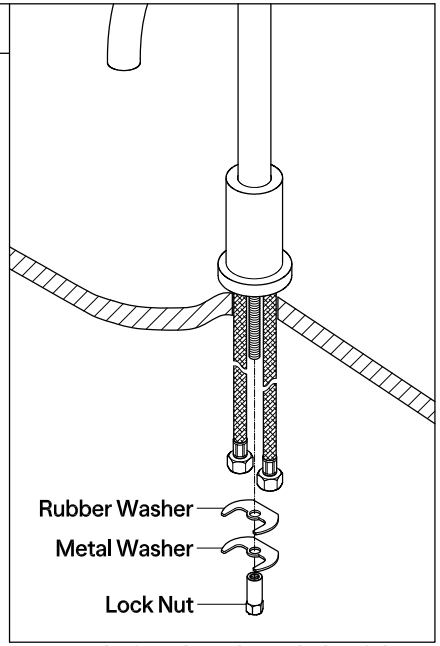

2. Insert the inlet bolt through the sink holes, and press down. Assemble the rubber washer and brass washer from the bottom, and then tighten the locknut by basin wrench.

3

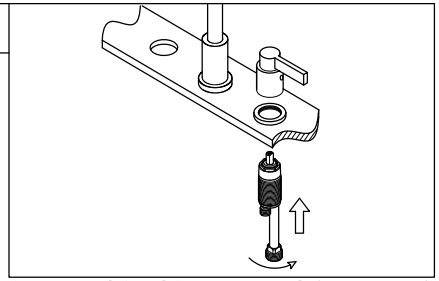

3. Hot and Cold Stem assemblies are easily Identifiable by a Red(Hot) or Blue(Cold) band, insert stem assembly through side holes from below making sure to have bottom nut and metal washer threaded on stem assembly.

4

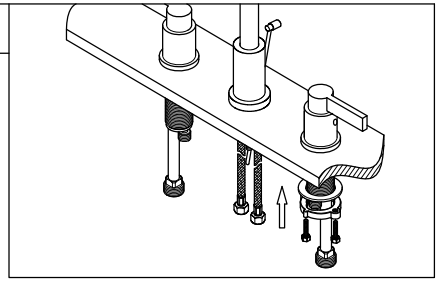

4. While holding from under the sink install trim ring and thread escutcheon on to stem assembly, adjust to a suitable height to allow sufficient space for handle to operate smoothly. Tighten bottom nut, please make sure to align direction of lever handles before tightening stem.

5

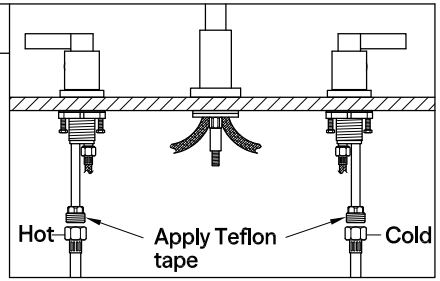

5. Apply Teflon tape on all male threading and install inlet supply lines (not included) to bottom inlet port of hot and cold valve assembly.

6

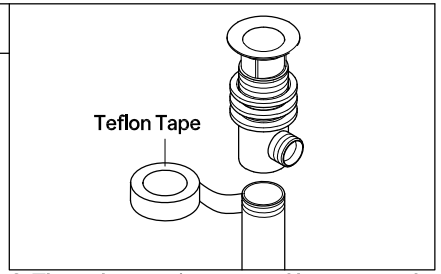

6. Thread mounting nut and bottom gasket onto drain body. Wrap the threaded end of the drain body with Teflon tape.

7

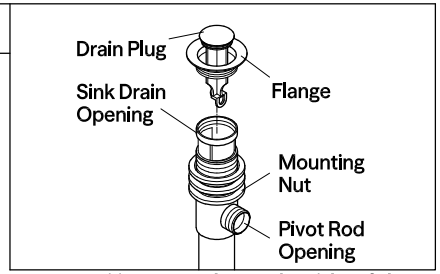

7. Apply silicone to the underside of the flange. Install the flange body up through the drain opening, positioning it with the pivot rod opening facing the back of the sink. While holding it in place, hand-tighten the mounting nut. Be sure to clean off any excess silicone.

8

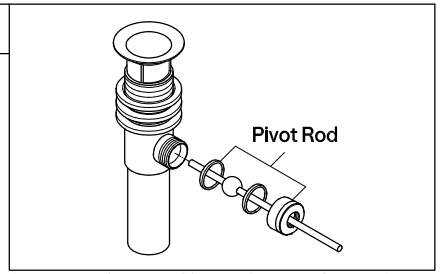

8. Place pivot rod into pivot rod opening. Slide pivot nut over pivot rod and thread it on the drain body. Tighten firmly.

9

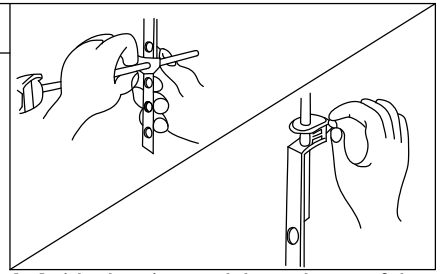

9. Guide the pivot rod through one of the holes on the lift rod strap and secure it with the spring clip. Then adjust the height of the lift rod by resetting the clevis screw. With lift rod in position on the faucet, insert lift rod through lift rod strap and secure with the clevis screw.

10

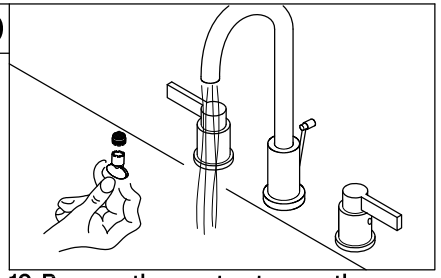

10. Remove the aerator, turn on the faucet, let water run for at least one minute, this will clear any debris left in the line, reinstall aerator.

Warning!!!

- Do not over-tighten nut during installation.
- Over-tighten may crack the valve and cause severe leak.

©2025 LVC Kingston LLC. All Rights Reserved.
2025-09-G

KINGSTON

Mounting nut

Installation Instructions

To install the mounting hardware:

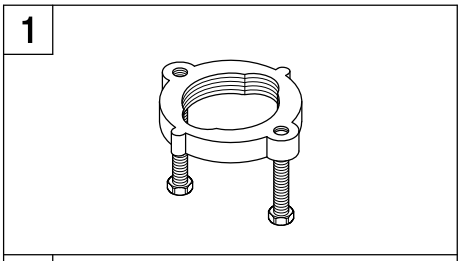

1. Unscrew Both adjustment screws as much as possible without removing them.

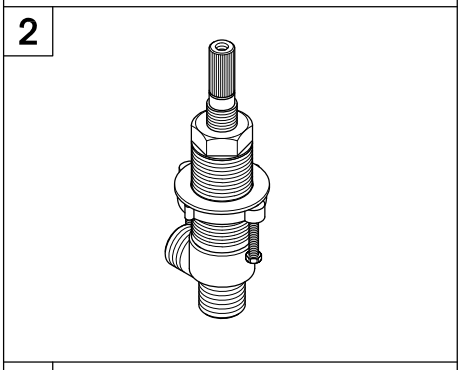

2. Thread lock nut onto the valve assembly and slip on the metal washer.

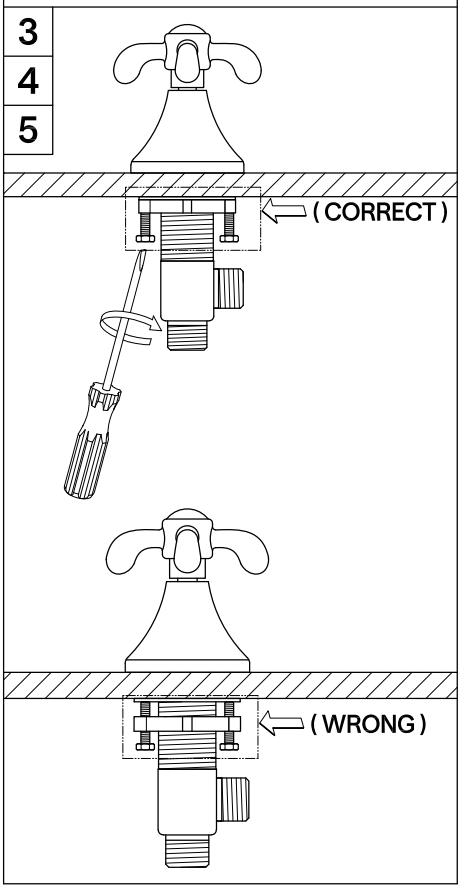

3. Once the valve assembly has been secured from the top, hand tighten brass lock nut all the way to the top.

4. Gently secure the screws to lock the valve assembly in place using only a Phillips head screw driver. Do not over-tighten as this may damage steel washer, see illustration.

5. Do not use any power tools as this may damage the valve assembly and cause leaking.

www.kingstonbrass.com

TOLL-FREE CUSTOMER SERVICE: 1-877-2-KBRASS
TECHNICAL SUPPORT E-mail: service@kingstonbrass.com
12775 Reservoir Street, Chino, CA 91710

©2025 LVC Kingston LLC. All Rights Reserved.

2025-06-TG