Miele

Operating instructions
Washer-dryer

To avoid the risk of accidents or damage to the appliance, it is **essential** to read these instructions before it is installed and used for the first time.

en-AU, NZ

M.-Nr. 12 959 320

Contents

Caring for the environment **5**

Environmentally friendly washing and drying **6**

Warning and Safety instructions **7**

Operating the washer-dryer **14**
Control panel 14
How the control panel works 15
Applications 15

Before the first use **16**
Requirements for networking 17
Setting up Miele@home 17
Running the first wash programme 18

Washing **19**
1. Preparing the laundry 19
2. Loading the drum 20
3. Selecting a programme 21
4. Adding detergent 22
5. Starting the programme 25
6. End of the programme/unloading laundry 26
Spin cycle 27
Programme chart 29
Programme sequence 31
Detergent 33
Water softeners 33
Fabric softeners, liquid starch, starch 33
Colour run and dye removers/dyes 34

Drying **37**
1. Preparing the laundry 37
2. Loading the drum 37
3. Selecting a programme 38
4. Selecting programme settings 39
5. Starting the programme 39
6. End of the programme/unloading laundry 40
Programme chart 41
Thermospin 43

Washing and Drying **44**
1. Preparing the laundry 44
2. Loading the drum 44
3. Selecting a programme 44
4. Selecting programme settings 44
5. Adding detergent 45

6. Programme start/finish 45
After each washing or drying programme 45

Rinse out fluff programme **46**

Changing the programme sequence **47**
Changing the programme (safety lock) 47
Cancelling a programme 47
Adding laundry - AddLoad 47

Delay start/SmartStart **48**
Delay start 48

Cleaning and care **50**
Cleaning the external casing and fascia panel 50
Cleaning the detergent dispenser drawer 50
Cleaning the drum 52
Cleaning the water inlet filter 52
Descaling the washer-dryer 53
Carrying out descaling 53

Problem solving guide **54**
A programme cannot be started 54
Programme cancellation and fault indicator light 54
Fault indicator light lights up at the end of a programme 55
Symbols in the time display 56
General problems with the washer-dryer 57
An unsatisfactory wash result 59
Unsatisfactory drying result 60
The door will not open 61
Opening the door in the event of a blocked drain outlet and/or power cut 62

Service **64**
Contact in case of fault 64
Optional accessories 64
Warranty 64

Garment care label symbols **65**

Installation **66**
Front view 66
Rear view 67
Installation surface 68
Carrying the washer-dryer to its installation site 68
Removing the transit bars 68
Refitting the transit bars 69

Contents

Additional installation requirements 70
Installing under a continuous worktop 70
Levelling the washer-dryer 70
The Miele water protection system 71
Water intake 72
Drainage 72
Electrical connection 74

Technical data 75

Consumption data 76

Programmable functions 77
Choosing and selecting programmable functions 77
Editing and saving the programmable function 78
Exiting the programming level 78
P11 Buzzer duration 78
P12 Buzzer 78
P13 Keypad tone 78
P14 PIN code 79
P22 Control panel switch-off status 79
P24 Memory 80
P28 Gentle action 80
P29 Temperature reduction 80
P32 Maximum rinse level 80
P33 Suds cooling 81
P49 Low water pressure 81
P62 Display brightness 81
P70 Cottons drying levels 81
P71 Minimum iron drying levels 82
P72 Extended cool down 82
P77 Compressed laundry protection 82
P90 Operating hours 82
P97 Remote control 83
P98 SmartGrid (only functional in selected countries) 83
P99 RemoteUpdate 83
P00 Factory default setting 85
Switching off Wi-Fi 85
Copyright and licences for the communication module 86

Disposal of the packing material

The transport and protective packaging has been selected from materials which are environmentally friendly for disposal, and can normally be recycled.

Recycling the packaging reduces the use of raw materials in the manufacturing process and also reduces the amount of waste in landfill sites. Ensure that any plastic wrappings, bags etc. are disposed of safely and kept out of the reach of babies and young children. Danger of suffocation.

Only for Australia: Note for installer: Expanded polystyrene (EPS) packaging included. Please retain and dispose of EPS packaging responsibly. For further information, please contact Miele.

Disposing of your old appliance

Electrical and electronic appliances often contain valuable materials. They also contain specific materials, compounds and components, which were essential for their correct function and safety. These could be hazardous to human health and to the environment if disposed of with your domestic waste or if handled incorrectly. Please do not, therefore, dispose of your old appliance with your household waste.

Please dispose of it at your local community waste collection / recycling centre for electrical and electronic appliances. You are also responsible for deleting any personal data that may be stored on the appliance prior to disposal. Please ensure that your old appliance poses no risk to children while being stored prior to disposal.

Environmentally friendly washing and drying

Energy and water consumption

- Use the maximum load size for the current programme. The energy and water consumption will then be the lowest in relation to the size of the load.
- Programmes that are more efficient with regard to energy and water consumption generally have a longer programme running time. By extending the programme running time, the wash temperature that is actually reached can be reduced while still providing the same wash results. For example, the *ECO 40-60* programme has a longer programme running time than the *Cottons* 40°C or 60°C programme. The *ECO 40-60* programme, however, is more efficient in terms of energy and water consumption.
- Use the *Express* programme for small, lightly soiled loads.
- Modern detergents make it possible to wash at lower temperatures (e.g. 20°C). Using lower temperature settings will save energy.
- To maintain the hygiene of the machine, carry out a hot wash (above 60°C) at regular intervals. The **i** indicator light lights up in the control panel and *1* appears in the time display of the washer-dryer to remind you.

Detergent

- Do not exceed the amounts of detergent recommended by the manufacturer on the packaging.
- Adjust the dosage to the degree of soiling of the laundry.
- Reduce the amount of detergent with smaller loads (e.g. reduce the amount of detergent by ⅓ when washing a half load).

Information about subsequent tumble drying

To save energy when tumble drying, select the highest possible spin speed for the wash programme and for the thermospin.

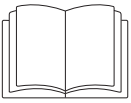

▶ It is **essential** to read these instructions.

This washer-dryer complies with all current local and national safety requirements. However, inappropriate use can lead to personal injury and damage to property.

Read the operating instructions carefully before using the washer-dryer. They contain important information on safety, installation, use and maintenance of the appliance. This prevents both personal injury and damage to the washer-dryer.

In accordance with standard IEC 60335-1, Miele expressly and strongly advises that you read and follow the instructions in "Installation", as well as in the "Warning and Safety instructions".

Miele cannot be held liable for injury or damage caused by non-compliance with these instructions.

Keep these operating instructions in a safe place and pass them on to any future owner.

Correct application

▶ This washer-dryer is intended for use in domestic households and similar residential environments, by guests in hotel or motel rooms, bed & breakfasts and other typical living quarters. This does not include common/shared facilities or commercial facilities within hotels, motels or bed & breakfasts.

▶ This washer-dryer is intended for the following applications only:

- washing textiles which have a care label stating that they are washable.
- drying textiles which have been washed in water and have a care label stating that they are suitable for tumble drying.

All other types of use are not permitted. Miele cannot be held liable for damage resulting from incorrect or improper use or operation.

▶ The washer-dryer is not intended for outdoor use.

▶ This appliance is not intended for use by persons (including children) with reduced physical, sensory or mental capabilities, or lack of experience and knowledge, unless they have been given supervision or instruction concerning its use by a person responsible for their safety.

Safety with children

▶ Young children must be kept away from the washer-dryer unless they are constantly supervised.

▶ Older children may only use the washer-dryer unsupervised if they have been shown how to use it safely. Children must be able to understand and recognise the possible dangers caused by incorrect operation.

▶ Children must not be allowed to clean or maintain the washer-dryer unsupervised.

▶ Please supervise young children in the vicinity of the washer-dryer. Never allow children to play with the appliance.

Technical safety

▶ Before installation check the washer-dryer for visible signs of damage. Do not install or use a damaged appliance.

▶ Before connecting the appliance, make sure that the connection data on the data plate (voltage, frequency, and connected load) match the mains electricity supply. If in doubt, consult a qualified electrician.

▶ The electrical safety of this appliance can only be guaranteed when continuity is complete between it and an effective earthing system which complies with current local and national safety regulations.
It is essential that this standard safety requirement is observed and regularly tested. If in any doubt, have the electrical installation inspected by a qualified electrician.
Miele cannot be held liable for the consequences of an inadequate earthing system (e.g. electric shock).

▶ Do not connect the washer-dryer to the mains electricity supply by a multi-socket adapter, extension lead or similar. These do not guarantee the required safety of the machine (fire hazard due to the risk of overheating).

▶ Unauthorised repairs could result in unforeseen dangers for the user, for which the manufacturer cannot accept liability. Maintenance or repairs must only be carried out by a qualified specialist or Miele Customer Service.

▶ Please observe the instructions in “Installation” and “Technical data”.

▶ The electrical plug must be easily accessible after installation so that the washer-dryer can be disconnected from the electricity supply if necessary.

▶ In the event of a fault or for cleaning purposes, the washer-dryer must be disconnected from the mains electricity supply. It is only completely isolated from the electricity supply when:

- switched off at the wall socket and the power plug is withdrawn from the socket
- the mains circuit breaker has been switched off, or
- the screw-out fuse is removed (in countries where this is applicable).

▶ The Miele water protection system protects from water damage provided the following conditions are met:

- The machine is correctly plumbed in and connected to the electricity supply.
- If a fault or damage has been identified, the washer-dryer must be repaired by a competent person before further use.

▶ The machine must only be connected to the on-site water supply using a new hose kit. Old hose kits must not be re-used. Check the condition of the hoses regularly so that you can replace them in good time and avoid the risk of any water damage.

▶ The water inlet pressure must be at least 100 kPa and must not exceed 1000 kPa.

▶ We recommend replacing faulty components with original Miele parts. If original Miele parts are installed correctly, Miele guarantees full compliance with safety requirements and the warranty remains valid.

▶ If the power supply cord is damaged, it must only be replaced with a specific power supply cord of the same type (available from Miele Customer Service). For safety reasons, replacement may only be carried out by a suitably qualified specialist or Miele Customer Service.

▶ This washer-dryer must not be operated in mobile installations (e.g. on a ship).

▶ Do not make any alterations to the washer-dryer, unless authorised to do so by Miele.

▶ Temporary or permanent operation with a self-sufficient or non-mains synchronous energy supply system (e.g. isolated networks, back-up systems) is possible. A requirement for the operation is that the energy supply system complies with all current local and national requirements that apply to stand-alone, solar and/or battery systems. The protective measures provided in the installation and in this Miele product must also be assured in their function and operation in isolated operation or in non-mains synchronous operation, or replaced with equivalent measures in the installation.

▶ The manufacturer's warranty will be invalidated if the washer-dryer is not repaired by a qualified specialist or Miele Customer Service.

▶ In areas which may be subject to infestation by cockroaches or other vermin, pay particular attention to keeping the machine and its surroundings in a clean condition at all times. Any damage which may be caused by cockroaches or other vermin will not be covered by the machine warranty.

Correct use

Warning: Risk of fire / Flammable materials. To avoid the possible danger of fire, please read these warnings carefully.

▶ Do not install the washer-dryer in rooms that are subject to frost. Frozen hoses may burst or split, and the reliability of the electronic control unit may be impaired at temperatures below freezing point.

▶ Before using the machine for the first time, check that the transit bars at the rear of the appliance have been removed (see "Installation - Removing the transit bars"). During the spin cycle, a transit bar which is still in place may result in damage to the washer-dryer and adjacent furniture or appliances.

▶ Turn off the tap if the washer-dryer is to be left for a longer period of time (e.g. while on holiday), especially if there is no floor drain (gully) in the immediate vicinity.

▶ Danger of flooding! If hooking the drain hose into a wash basin, check that the water can drain away fast enough to prevent the sink from overflowing. Secure the drain hose against slipping. The force of the water flowing out of the hose can dislodge it.

▶ Make sure that no foreign objects (e.g. nails, pins, coins, paper clips) find their way into the machine with the laundry. These may damage components of the machine (e.g. suds container, drum). Damaged components can, in turn, result in damage to the laundry.

▶ Take care to remove any detergent dispensing aids (e.g. detergent balls) before drying the laundry. These can melt during the drying programme and cause damage to the machine and the laundry.

▶ Risk of burning or scalding due to hot temperatures. The metal cap located on the inside of the door glass will be hot after drying. Open the door wide after drying. Do not touch the metal cap.

▶ Fabric softener and similar products must be used according to the instructions on the manufacturer's packaging.

▶ To prevent the risk of fire, the following textiles must **not** be dried in this washer-dryer:

- Items which have not been washed.
- Items, such as workwear, which have not been thoroughly cleaned and are still soiled with grease, oil or other deposits (such as cooking oils, cosmetics, lotions etc). If items have not been thoroughly cleaned, there is a danger that they might ignite when heated, even after they have been removed from the dryer at the end of the programme.
- Items that have been soiled with flammable substances such as cooking oil, acetone, petrol, kerosene, spot removers, turpentine, waxes, wax removers and other chemicals (e.g. mops and floor cloths).
- Items which have been splashed with hair lacquer, hair spray, nail varnish remover or similar substances.

When washing such heavily soiled items ensure that you use sufficient detergent and select a high temperature. If in doubt, wash the items several times.

▶ To prevent the risk of fire, the following textiles must never be dried in this washer-dryer:

- Items which have been cleaned using chemicals (e.g. professional dry-cleaning agents).
- Fabrics which contain a large proportion of rubber, foam rubber or rubber-like materials. For example, products made from latex foam rubber, shower caps, waterproof textiles, rubberised articles and items of clothing and pillows with foam rubber filling.
- Fabrics which contain padding or fillings (e.g. pillows, jackets). If these were damaged the filling could come out with the risk of igniting in the dryer.

▶ Only use dyes specified by the manufacturer as being suitable for use in a domestic washer-dryer, and only use them in domestic quantities. Always observe the manufacturer's instructions carefully.

▶ Dye removers contain sulphur compounds which can cause damage such as corrosion. Do not use dye removers in this washer-dryer.

▶ In many programmes, the heating phase is followed by a cooling down phase to ensure that the items are not too hot to handle when you remove them (this also reduces the risk of the laundry self-igniting). The programme is not finished until after the cooling down phase. It is advisable to remove all laundry as soon as the programme has finished.

▶ Do not switch the washer-dryer off before the end of the drying programme, unless all items are removed immediately and spread out to cool down.

▶ This washer-dryer must not be connected to a controllable socket, e.g. a timer or a peak-load switch-off device. There is a risk of the laundry igniting itself if a drying programme is cancelled before the cooling phase has finished.

▶ Fabrics that have been pre-treated in solvent-based cleaning agents must be thoroughly rinsed in clean water before being placed in the machine.

▶ Never use solvent based cleaning agents (e.g. one containing benzine) in this washer-dryer. This may result in damage to component parts and create toxic fumes. Risk of fire and explosion!

▶ If detergent has come into contact with the eyes, rinse out immediately with plenty of lukewarm water. If detergent has accidentally been ingested seek medical advice immediately. People with damaged or sensitive skin should avoid contact with the detergent.

▶ The maximum dry laundry weight is 8.0 kg for washing and 4.0 kg for drying. See the “Programme chart” for the maximum recommended loads for individual programmes.

▶ Fluff must not be allowed to accumulate in and around the tumble dryer.

▶ Oil-affected items can ignite spontaneously, especially when exposed to heat sources such as in a tumble dryer. The items become warm, causing an oxidation reaction in the oil. Oxidation creates heat. If the heat cannot escape, the items can become hot enough to catch fire. Piling, stacking or storing oil-affected items can prevent heat from escaping and so create a fire hazard.

▶ If it is unavoidable that fabrics contaminated with vegetable or cooking oil, or hair care products, are placed in a tumble dryer, they should first be washed in hot water with extra detergent - this will reduce, but not eliminate, the hazard.

▶ Remove all items from pockets (e.g. lighters, matches).

Accessories

▶ Only use genuine Miele spare parts and accessories with this machine. Using spare parts or accessories from other manufacturers will invalidate the warranty, and Miele cannot accept liability.

▶ Miele original spare parts are kept in stock for at least 10 years and up to 15 years after discontinuation of your washer-dryer.

Miele cannot be held liable for damage caused by non-compliance with these Warning and Safety instructions.

Control panel

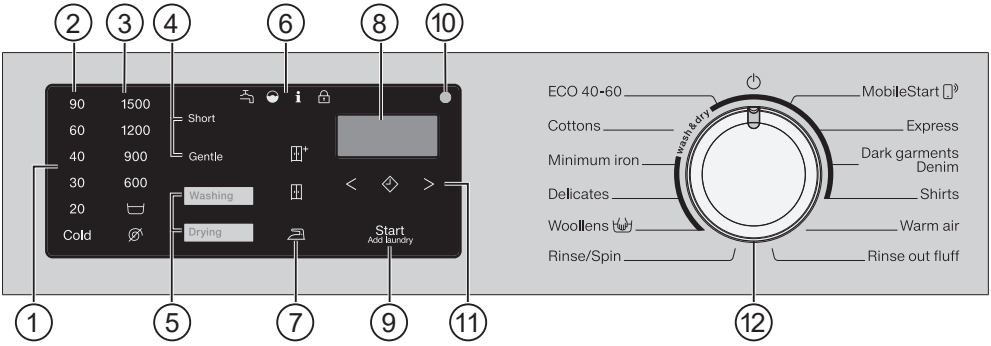

① **Control panel**
The control panel consists of a time display and various sensors. The individual sensors are explained in the following.

② **Temperature sensors**
For selecting the temperature

③ **Spin speed sensors**
For selecting the spin speed

④ **Extras sensors**
You can supplement programmes with Extras.
When a programme is selected, the sensors for the possible Extras light up.

⑤ **Washing/Drying sensors**
You can use the *Washing* and *Drying* sensors to select whether you want to wash, dry or wash and dry.

⑥ **Indicator lights**

lights up if there are faults with the water inlet and drainage

lights up if excess detergent was used

displays various information in combination with a number in the time display

The *Add laundry* function cannot be selected

⑦ **Drying level sensors**
Select the drying level of a drying programme using the , and + sensors.

⑧ **Time display**
After the programme has started, the programme duration will appear in the display in hours and minutes.
When Delay start is being used, the programme duration will appear after the Delay start time has elapsed.

⑨ ***Start/Add laundry* sensor**

– The programme can be started as soon as the sensor is flashing on and off. Touching the *Start/Add laundry* sensor starts the selected programme. The sensor lights up constantly.

– Once the programme has been started, the *Start/Add laundry* sensor allows you to add laundry.

⑩ **Optical interface**
For service technicians.

⑪ **Delay start sensor** ⏱ with arrow sensors < and >
With Delay start you can delay the start of a programme.

⑫ **Programme selector**
For selecting programmes and for switching off the appliance. The washer-dryer is switched on by selecting a programme. You can switch the washer-dryer off by turning the programme selector to the ⏻ position.

How the control panel works

The sensors react to fingertip contact. Selection is possible as long as the respective sensor is illuminated.

If a sensor is brightly lit, this means it is currently selected.

If a sensor is dimly lit, this means it can be selected.

Applications

You can use this washer-dryer to:

- **wash separately**
  Maximum load (depending on programme) 8.0 kg.
- **dry separately**
  Maximum load (depending on programme) 4.0 kg.

  or

- **wash and dry in a continuous sequence**
  Maximum load (depending on programme) 4.0 kg.

⚠ Damage resulting from incorrect installation and connection.
Installing and connecting the washer-dryer incorrectly will cause serious property damage.
Please observe the instructions in “Installation”.

This washer-dryer has undergone a complete functional test at the factory and there will be some residual water in the drum from this process.

Removing the protective foil and advertising stickers

■ Remove:

- the protective foil from the door (if present).
- any advertising stickers from the front and the lid.

Please do not remove any labels (e.g. the data plate) which are visible when you open the door.

Remove the drain hose elbow from the drum

An elbow piece for the drain hose is stored in the drum.

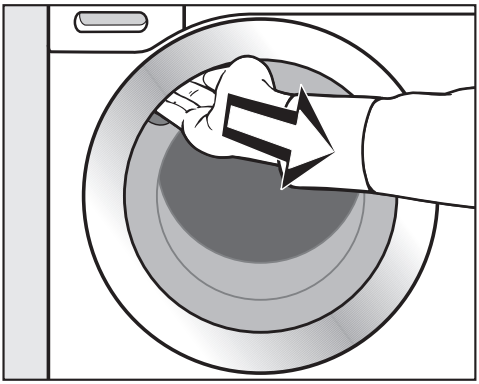

■ Reach under the door grip and pull the door open.

■ Remove the elbow piece.

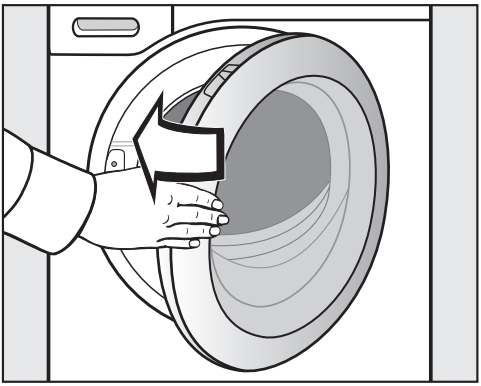

■ Shut the door with a gentle swing.

Requirements for networking

Note the following requirements for networking:

1. A home network is available at the installation site.
   Have the Wi-Fi password ready.
2. The Miele App is available on a mobile device.
3. You have a user account in the Miele App.

Miele App

You can download the Miele App from the Apple App Store® or the Google Play Store™ free of charge (only functional in selected countries).

Download on the App Store

ANDROID APP ON Google Play

Setting up Miele@home

There are 2 ways of connecting:

1. Via the Miele@mobile App (default)
2. Via WPS

Signing on via the Miele@mobile App

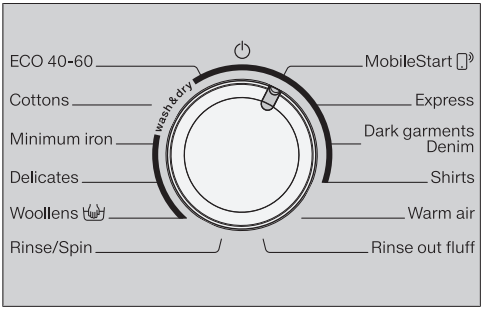

- Turn the programme selector to the *MobileStart* programme.

APP appears in the time display. The timeout time then starts to count down from 10 minutes in the time display.

The Miele@mobile App will guide you through the remaining steps.

When you have successfully connected, Con will appear in the time display.

Signing on via WPS

- Turn the programme selector to the *MobileStart* programme.
- Touch the sensor until WPS appears in the time display and a short keypad tone sounds.

The timeout time then starts to count down from 2 minutes in the time display.

When you have successfully connected, Con will appear in the time display.

Useful tip: If the connection has not been set up when the timeout has finished counting down, repeat the process.

Running the first wash programme

⚠ Damage resulting from failure to remove the transit bars.

Failure to remove the transit bars can result in damage to the washer-dryer and to adjacent cabinetry or appliances.

Remove the transit bars as described in “Installation”.

Before first use, the *Cottons* programme must be run without laundry and without detergent.

- Turn on the tap.
- Turn the programme selector to *Cottons*.

The washer-dryer is switched on and the temperature 90°C lights up on the control panel.

- Touch the *Start/Add laundry* sensor.

The programme will start.

After 10 minutes, the indicators dim, except for the *Start/Add laundry* sensor.

Opening the door at the end of the programme

The door remains locked during the Anti-crease phase. The control panel lights up for the first 10 minutes. The control panel then goes out and the *Start/Add laundry* sensor flashes.

- Turn the programme selector to the ⏻ position.

-0- appears in the time display and the 🔒 indicator light goes out.

The door will unlock.

Useful tip: After the Anti-crease phase, the washer-dryer switches off. The door is unlocked automatically. The control panel is completely dark.

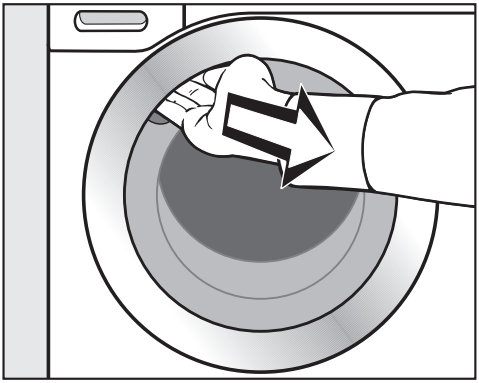

- Reach under the door grip and pull the door open.

Useful tip: For safety reasons, close the door when the machine is not in use. Otherwise there is a danger of objects being placed inadvertently in the drum. If these remain unnoticed and were washed in the next load, they could damage the laundry. An open door is also a danger to pets and children.

The appliance is now ready for use.

1. Preparing the laundry

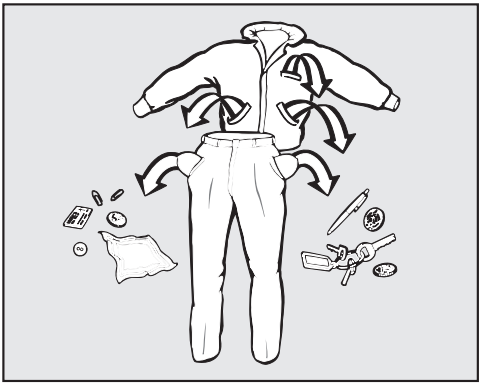

■ Empty all pockets.

⚠ Damage due to foreign objects.
Foreign objects (nails, coins, paper clips, etc.) can cause damage to garments and to components in the machine.
Check the laundry before washing and remove any foreign objects.

Sorting the laundry

■ Sort the laundry by colour and by care label. Most garments have a textile care label in the collar or side seam.

Useful tip: Dark textiles often contain excess dye and should be washed separately several times before being included in a mixed load. Wash light and dark coloured items separately.

Pre-treating stains

■ Badly soiled areas and stains should be cleaned as soon as possible, preferably whilst still fresh. Spillages should be carefully dabbed off using a soft, colourfast cloth. Do not rub.

Useful tip: Stains (e.g. blood, egg, coffee, tea) can be pre-treated using some handy tricks which can be found under the "ABC of Stains" on the Miele website.

⚠ Damage due to solvent-based cleaning agents.
Cleaning agents containing benzine, stain remover, etc., can damage plastic parts.
When pre-treating garments, make sure that any plastic parts (e.g. buttons) do not come into contact with cleaning agent.

⚠ Risk of explosion due to solvent-based cleaning agents.
If solvent-based cleaning agents are used, an explosive mixture can form.
Never use solvent-based cleaning agents in the washer-dryer.

General tips

- Curtains: remove lead weights first or place in a laundry bag.
- Remove or sew in any loose underwiring in bras or shirt collar stiffeners.
- Close any zips, attach velcro fasteners, fasten hooks and eyes, etc. before washing.
- Fasten duvet covers and pillow cases to prevent small items from being rolled up inside them.

Do not wash items which are specified by the manufacturer as **not washable** on the care label (symbol).

2. Loading the drum

Opening the door

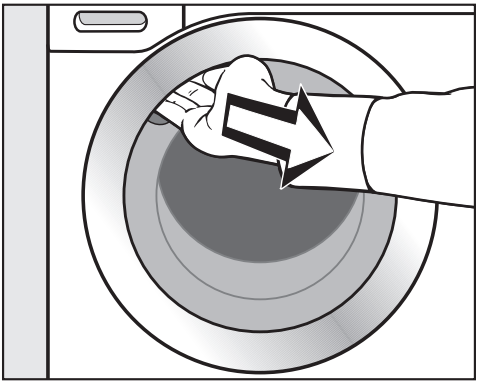

- Reach under the door grip and pull the door open.

Check the drum for pets or foreign objects before loading it with laundry.

- Unfold the laundry and load loosely in the drum.

Mixing both large and small items gives better wash results and helps distribute the load evenly during spinning.

The most efficient use of energy and water is achieved when a full load is washed. However, do not overload as this reduces cleaning efficiency and causes creasing.

Useful tip: Please note the maximum load size for different wash programmes.

Closing the door

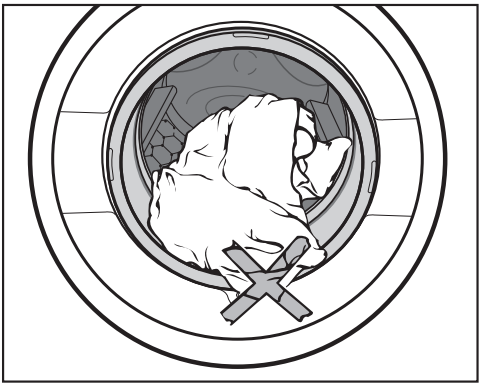

- Make sure that no items are caught between the door and the seal.

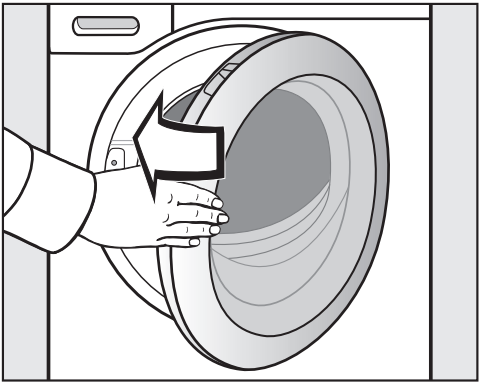

- Shut the door with a gentle swing.

3. Selecting a programme

Switching the washer-dryer on

- Turn the programme selector to a programme.

The control panel lights up.

Selecting a programme

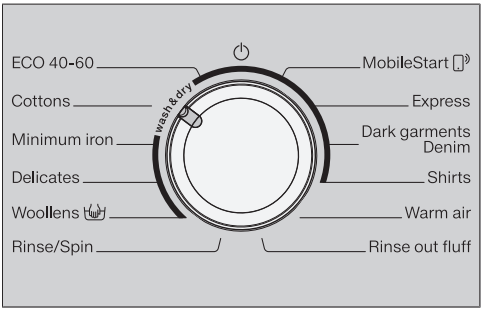

- Turn the programme selector to the required programme.

The estimated programme running time is shown in the time display and the preset temperature and spin speed light up in the control panel.

- **Using the *MobileStart* programme selector position**

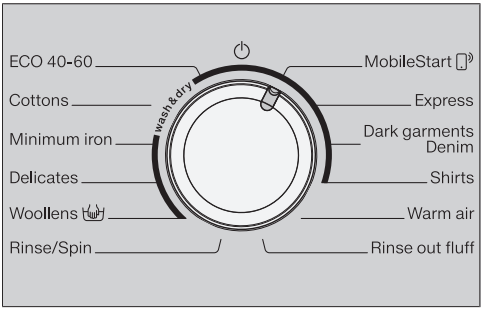

- Turn the programme selector to the *MobileStart* position.

Useful tip: In order to use MobileStart , the washer-dryer must be logged on to the Wi-Fi network and Remote control must be switched on.

Con appears in the time display.

Once the programme has started, the washer-dryer can be operated with the Miele@mobile App.

Selecting washing

- Touch the *Washing* or *Drying* sensor until just the *Washing* sensor is brightly lit up.

> The *Drying* sensor must only light up dimly as otherwise the wash programme would be followed immediately by the relevant drying programme.

Selecting the temperature and spin speed

> The wash programme's preset temperature and spin speed light up brightly. The choice of temperatures and spin speeds selectable for the wash programme light up dimly.

The temperatures reached in the wash programme might not be the same as the temperatures selected. The combination of energy input and washing time achieves an optimum washing result.

90	1500
60	1200
40	900
30	600
20	
Cold	

- Touch the sensor for the temperature you want.

The sensor lights up brightly.

- Touch the sensor for the spin speed you want.

The sensor lights up brightly.

Selecting Extras

The sensors for the *Short* and *Gentle* Extras light up dimly when they can be selected in addition to the programme.

- Touch the sensor for the Extra you want.

The sensor lights up brightly.

Gentle

Drum rotation and wash duration are reduced. Lightly soiled fabrics are washed more gently.

Short

For light soiling with no visible staining.

The duration of the main wash is reduced.

Selecting Delay start

You can use Delay start to set the start time for a programme.

- Select a Delay start time if required.

4. Adding detergent

Detergent can be dispensed via the detergent dispenser drawer Ⓐ or via CapDosing Ⓑ.

Ⓐ Detergent dispenser drawer

Any detergent suitable for automatic front loading washing machines can be used with this appliance. Please observe the instructions for use and dosage on the detergent packaging.

Adding detergent

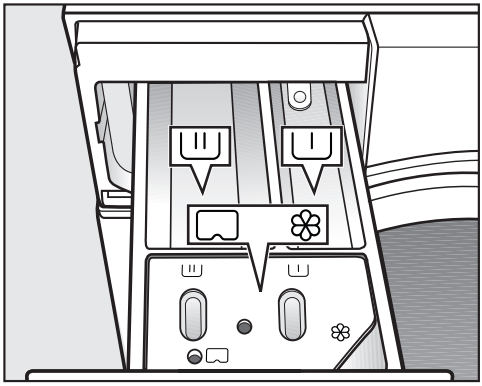

- Pull out the detergent dispenser drawer and add detergents to the compartments.

Detergent for the main wash

Fabric softener, liquid starch, or capsules

Adding fabric softener

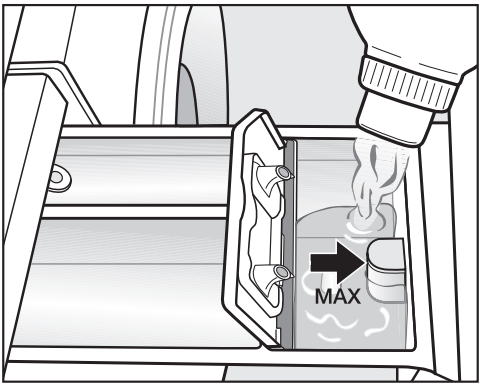

- Add the fabric softener or the liquid starch to the ❀ compartment. **Do not exceed the maximum level mark.**

This will be automatically dispensed in the final rinse. At the end of the wash programme a small amount of water remains in the ❀ compartment.

> Starch can make the siphon tube sticky. If starching frequently, thoroughly clean the detergent drawer, especially the siphon, regularly.

Tips on dosing

Adjust the detergent dosage to the level of soiling of the laundry and the size of the load. Reduce the amount of detergent with smaller load sizes (e.g. reduce the amount of detergent by 1/3 when washing a half load).

Too little detergent results in:

- laundry not getting properly clean and with time it may become grey and hard to the touch.
- a possible build-up of mould in the washer-dryer.
- grease not being completely removed from the laundry.
- possible limescale deposits on the heater elements.

Too much detergent results in:

- poor wash, rinse, and spin results.
- a higher water consumption as an extra rinse cycle is automatically activated.
- a greater burden on the environment.

See "Washing - Detergent" for further information about detergents and how much to dispense.

Using detergent tablets or pods

Always put detergent tablets or pods directly in the drum with the laundry. They cannot be added via the detergent dispenser drawer.

Ⓑ CapDosing

CapDosing can only be activated via the Miele@mobile App.

Three different types of capsules are available:

❀ = Fabric care (e.g. fabric softener, proofing agent)

= Additives (e.g. detergent enhancers)

= Detergent (for the main wash only)

Each capsule contains the correct amount for one wash cycle.

Caps are available from shop.miele.com, by contacting Miele directly, or at a Miele Experience Centre.

⚠ Capsules pose a health risk.
The ingredients of capsules can be hazardous to health if they are swallowed or come into contact with skin.
Keep capsules out of the reach of children.

Inserting a capsule

- Open the detergent dispenser drawer.

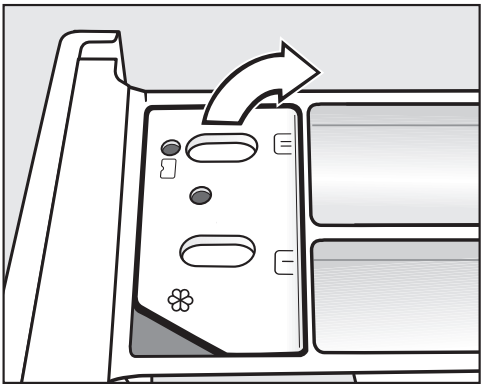

- Open the lid of the ❀/ compartment.

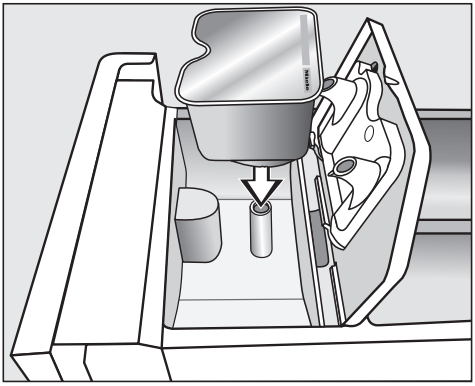

- Press the capsule in firmly.

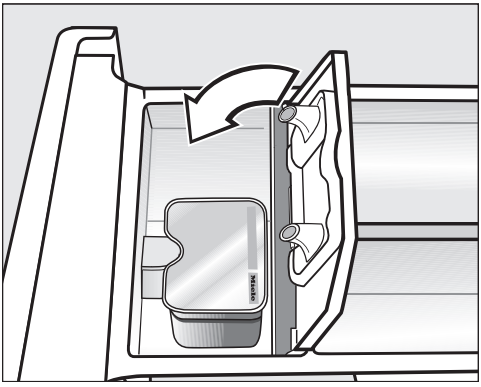

- Close the lid and press it firmly shut.
- Close the detergent dispenser drawer.

The capsule is opened by the act of inserting it in the detergent dispenser drawer. The contents can run out of the capsule if you then remove it from the detergent drawer before it is used.

In this case, dispose of the capsule and do not re-use it.

The wash programme will dispense the contents of the capsule at the correct time.

When using CapDosing, water intake to the ❀ compartment takes place solely via the capsule.

When using capsules, do not add fabric softener to the ❀ compartment.

- Remove the empty capsule at the end of the wash programme.

For technical reasons, a small amount of water will remain in the capsule.

5. Starting the programme

Automatic safety lock

The washing machine has an automatic safety lock. The washing machine can only be started within 60 seconds of the last operational step on the control panel.

If the 60 seconds are exceeded, or if the door is opened and re-closed, the display goes dark and the *Start/Add laundry* sensor control no longer flashes green. To switch the display back on, touch the ◇ sensor control.

You then have another 60 seconds in which to start the wash programme.

- Touch the flashing *Start/Add laundry* sensor.

The door will lock and the programme will start.

If a Delay start time has been selected, this counts down in the time display. At the end of the Delay start period or immediately after the programme has started, the programme running time will appear in the time display.

Laundry can be added or removed at any time, provided that the 🔒 symbol is not illuminated in the display (see “Changing the programme sequence – Adding laundry”).

Saving energy

After 10 minutes, the indicators will dim. The *Start/Add laundry* sensor flashes slowly.

You can reactivate the indicators:

- Touch the *Start/Add laundry* sensor (this does not have any effect on a programme that is running).

6. End of the programme/ unloading laundry

At the end of the programme, the drum continues to turn at intervals for up to 30 minutes. The door is locked. The control panel lights up for the first 10 minutes. The control panel then goes out and the Start/Add laundry sensor flashes.

- Turn the programme selector to the ⏻ position.

-0- appears in the time display and the 🔒 indicator light goes out.

The door will unlock.

Useful tip: The door unlocks automatically at the end of the Anti-crease phase.

- Pull open the door.
- Remove the laundry.

Items left in the drum could shrink or discolour other items in the next wash.
Remove all items from the drum.

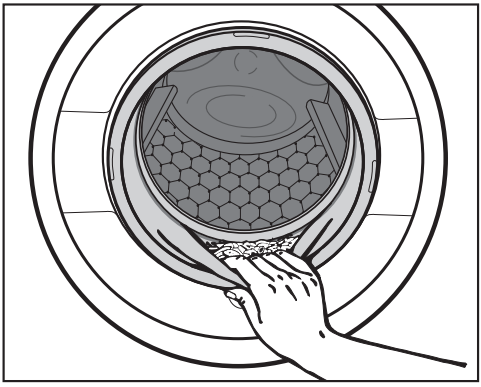

- Check the folds in the door seal for any small articles, e.g. buttons, which might be lodged there.

Useful tip: For safety reasons, close the door when the machine is not in use. Otherwise there is a danger of objects being placed inadvertently in the drum. If these remain unnoticed and were washed in the next load, they could damage the laundry. An open door is also a danger to pets and children.

- If applicable, remove the used capsule from the detergent dispenser drawer.

Useful tip: Leave the detergent dispenser drawer slightly open to allow it to dry.

Spin cycle

Final spin speed in wash programmes

When a programme is selected, the sensor for the optimum spin speed for that programme will be brightly lit up in the control panel.

A faster spin speed can be selected for certain wash programmes.

The highest selectable spin speed is indicated in the table.

Programme	rpm
ECO 40-60	1500
Cottons	1500
Minimum iron	1200
Delicates	900
Woollens	1200
Rinse/Spin	1500
Express	1200
Dark garments/Denim	900
Shirts	900

Interim spin

There is a spin cycle after the main wash and between the rinses. A reduction in the final spin speed will also reduce the interim spin speed as appropriate.

Omitting the final spin (Rinse hold)

- Touch the sensor (Rinse hold).

The laundry is not spun after the final rinse and remains in the rinse water. This helps prevent creasing if the laundry is not going to be removed from the drum immediately after the end of the programme.

To start the final spin:

The sensor for the optimum spin speed lights up in the control panel. You can change the spin speed.

- Start the final spin with the *Start/Add laundry* sensor.

To end the programme:

- Touch the sensor (no spin).
- Touch the *Start/Add laundry* sensor.

The water will be pumped away.

Deselecting the interim spin and the final spin

■ Touch the ⊘ sensor (no spin).

After the last rinse, the water will be pumped away and the Anti-crease phase will switch on.

In some programmes an additional rinse is introduced with this setting.

Programme chart

ECO 40-60		Max. load 8.0 kg
Items	Normally soiled cotton garments.	
Notes	- A laundry load consisting of mixed cottons that are intended for washing at 40°C or 60°C can be washed in the same wash cycle. - This programme is the most efficient in terms of energy and water consumption for washing cottons.	
Energy labelling programme according to AS/NZS 2040.1 & AS/NZS 2040.2 (refer to www.energyrating.gov.au website for consumption data), with default settings (i.e. temperature selection 40°C).		
Cottons	**Cold to 90°C**	**Max. load 8.0 kg**
Items	Cottons, linens or cotton mix fabrics, e.g. table linen, towelling, underwear, T-shirts etc.	
Notes	- Select the temperature according to the instructions on the care label, the detergent, the type of soiling and the hygiene requirements. - For dark-coloured fabric, use a colour detergent.	
Minimum iron	**Cold to 60°C**	**Max. load 3.5 kg**
Items	Synthetic, mixed fibre and easy care cotton.	
Notes	Reduce the spin speed for items which crease easily.	
Delicates	**Cold to 40°C**	**Max. load 2.0 kg**
Items	Delicate garments made from synthetic fibre, mixed fibre, rayon and viscose.	
Notes	For items which crease easily, deselect the spin.	
Woollens	**Cold to 40°C**	**Max. load 2.0 kg**
Items	Machine-washable or hand-washable wool or wool blend fabric. If the care label does not specify a temperature, wash using the cold setting.	
Notes	Reduce the spin speed for fabrics that crease easily.	

Rinse/Spin		**Max. load 8.0 kg**
Items	Rinsing and spinning hand-washed items	
Notes	- Make sure you select the appropriate spin speed. - Spin only: select the *Short* Extra. - Rinse only: set spin speed to ⊘.	
MobileStart		
Notes	The Miele App is used for selecting programmes and operating the machine.	
Express	**Cold to 40°C**	**Max. load 3.5 kg**
Items	Cotton garments that have hardly been worn or are only very lightly soiled.	
Dark garments/Denim	**Cold to 60°C**	**Max. load 3.0 kg**
Items	Black and dark garments made from cotton, mixed fibres and denim.	
Notes	- Wash inside out. - Denim often contains excess dye and may run during the first few washes. Wash light and coloured items separately. - Close any zips, do up buttons etc. before washing.	
Shirts	**Cold to 40°C**	**Max. load 2.0 kg**
Items	Shirts and blouses made of cotton and mixed fibre.	
Notes	- Pre-treat collars and cuffs if necessary. - Turn shirts and blouses inside out, do up buttons and turn collars and cuffs inwards.	
Warm air	⇨ "Programme chart – Drying"	
Rinse out fluff	⇨ "Rinse out fluff programme"	

Programme sequence

	Main wash		Rinses		Spin cycle
	Water level	Wash rhythm	Water level	Rinses	
ECO 40-60		A		2–3[2]	✓
Cottons		A		2-4[1,2]	✓
Minimum iron		B		2-3[2]	✓
Delicates		C		2-3[2]	✓
Woollens		E		2	✓
Rinse/Spin	–	–		1	✓
Express		A		1	✓
Dark garments		B		3-4[2]	✓
Shirts		C		3	✓

Please see the next page for a description of the symbols.

= low water level

= medium water level

= high water level

Ⓐ = intensive rhythm

Ⓑ = normal rhythm

Ⓒ = sensitive rhythm

Ⓔ = handwash rhythm

✓ = carried out

– = not carried out

This washer-dryer has fully electronic controls with automatic load recognition. It takes in the right amount of water required for the programme depending on the amount of laundry and its absorbency rate.

The programme sequences outlined are based on the basic programme with a full load.

Special features in the programme sequence

Anti-crease

At the end of the programme, the drum continues to turn at intervals for up to 30 minutes to help prevent creasing.
Exception: there is no Anti-crease phase in the *Woollens* programme.
The drum door can be opened at any time during the Anti-crease phase.

[1] If a temperature of 60°C or higher is selected, 2 rinses are carried out. If a temperature of less than 60°C is selected, 3 rinses are carried out.

[2] An additional rinse is carried out if:

- there is too much foam in the drum
- the spin speed is less than 700 rpm

Detergent

Any detergent suitable for automatic front loading washing machines can be used with this appliance. Follow the manufacturer's instructions and dosage recommendations on the packaging.

The amount to dispense will depend on:

- the degree of soiling of the laundry
- the amount of laundry
- the water hardness

  Check with your local water supplier if you do not know the water hardness level in your area.

Water softeners

A water softener can be used to cut down on the use of detergents in areas with water hardness levels II and III. Dispense according to the amount specified on the packaging. First add detergent and then the water softener.

You can then use the recommended amount of detergent for water hardness level I.

Water hardness levels

Hardness range	Hardness level in mmol/l	German scale in °d
Soft (I)	0 – 1.5	0 – 8.4
Medium (II)	1.5 – 2.5	8.4 – 14
Hard (III)	above 2.5	above 14

Detergent dispensing aids

Use dispensing aids (e.g. balls) if these are supplied with the detergent, particularly when using liquid detergent.

Refill packs of detergent

When purchasing detergent, buy refill packs wherever possible. This helps reduce the amount of waste packaging.

Fabric softeners, liquid starch, starch

Fabric softeners make garments soft to handle and help prevent static cling when tumble drying.

Fabric shapers are synthetic starches and give an even stiffer hold.

Starch stiffens and gives body to fabric.

Using fabric softener, liquid starch or starch separately

Prepare the starch in accordance with the manufacturer's instructions on the packaging.

- Add fabric softener to the ❀ compartment.
- Add liquid starch to the ❀ compartment and powder or viscous starch to the ⊔ compartment.
- Select the *Rinse/Spin* programme.
- Change the spin speed if necessary.
- Touch the *Start/Add laundry* sensor.

Colour run and dye removers/dyes

⚠ Damage due to colour run/dye removers.
Colour run and dye removers can cause corrosion in the washer-dryer.
Do not use colour run or dye removers in this washer-dryer.

Dyes suitable for use in domestic washing machines can be used. However, please note that the salt used in the dyeing process can cause corrosion to stainless steel components in the machine if you use dye frequently. Always observe the manufacturer's instructions carefully.

Miele detergents

Miele detergents have been specially designed for everyday use in Miele washing machines.

	Miele detergents		Miele capsules		
	UltraWhite	UltraColor			
ECO 40-60	✓	✓	–	✓	✓
Cottons	✓	✓	–	✓	✓
Minimum iron	–	✓	–	✓	✓
Delicates	–	✓	✓	✓	–
Woollens	–	–	✓	–	–
Rinse/Spin	–	–	–	✓	–
Express	–	✓	–	✓	–
Dark garments/Denim	–	✓	✓	✓	–
Shirts	✓	✓	–	✓	✓

✓ Recommended

– Not recommended

Specialist detergents (e.g. WoolCare)

Fabric care (e.g. fabric softener)

Additive (e.g. booster)

Washing

The recommendations apply to the temperature ranges given in the section "Washing" in the Programme chart.

	Universal	Colour	Delicates and woollens	Special
	detergent			
ECO 40-60	✓	✓	–	–
Cottons	✓	✓	–	–
Minimum iron	–	✓	–	–
Delicates	–	–	✓	–
Woollens	–	–	✓	✓
Rinse/Spin	–	–	–	✓
Express	–	✓[1]	–	–
Dark garments/ Denim	–	✓[1]	–	–
Shirts	✓	✓	–	–

✓ Recommended

– Not recommended

[1] Liquid detergent

Separate drying

The separate drying programme should be run if the load in the wash programme is greater than the maximum load permitted for drying, or if you only want to dry part of the load that was washed.

1. Preparing the laundry

Sorting the laundry

■ Sort the laundry according to type of fibre/weave, size, garment care label symbol, and the drying level required.

This will help you to achieve an even drying result.

■ Before drying, check the drying symbol on the care label.

If there is no care label, the article should only be tumble dried in a programme specially designed for it.

Tips on drying

- Do not load the drum with items that are still soaking wet. Spin the laundry for at least 30 seconds after washing.
- Woollens and wool blends are susceptible to becoming matted or shrinking. Only use the *Woollens* programme for these textiles.
- Pure linen should only be tumble dried if it is specified as suitable on the care label. The surface of the fabric may otherwise become rough.
- Loopknit garments (e.g. T-Shirts, underwear) have a tendency to shrink after the first wash. Do not overdry these fabrics to prevent further shrinking. When buying loopknit garments, it is advisable to take their shrinkage potential into account.
- Starched laundry can be tumble dried. To achieve the usual finish, double the amount of starch should be used.
- New dark coloured garments should be washed and dried separately from light coloured garments. The colour of dark garments can run or fluff from garments of other colours may settle on them.
- Observe the maximum loads given for the drying programmes in the Programme chart.
  The drying result and amount of creasing depend on the size of the load. The smaller the load in the dryer the better the result. Therefore, if you reduce the load, you will achieve a more even drying result with less creasing.

2. Loading the drum

Opening the door

■ Reach under the door grip and pull the door open.

Check the drum for pets or foreign objects before loading it with laundry.

■ Load the laundry loosely in the drum.

Overloading places a strain on the textiles and affects drying results.
Observe the maximum loads listed in the Programme chart.

Closing the door

■ Make sure that no items are caught between the door and the seal.

■ Shut the door with a gentle swing.

Detergent dispensing aids, e.g. plastic dispenser balls, can melt during the drying programme and cause damage to the machine and the laundry.
These dispensing aids must be removed from the laundry before drying.

The mains water tap must be kept open for drying.

3. Selecting a programme

Switching the washer-dryer on

- Turn the programme selector to a programme.

The control panel lights up.

Selecting a programme

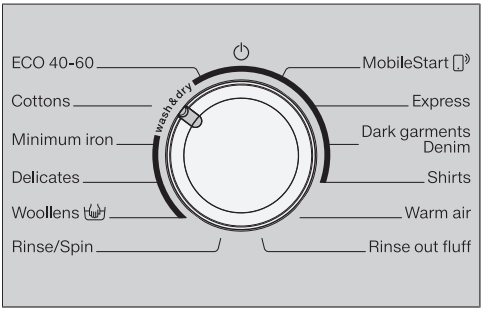

- Turn the programme selector to the required programme.

The estimated programme running time is shown in the time display and the preset temperature and spin speed light up in the control panel.

- **Using the *MobileStart* programme selector position**

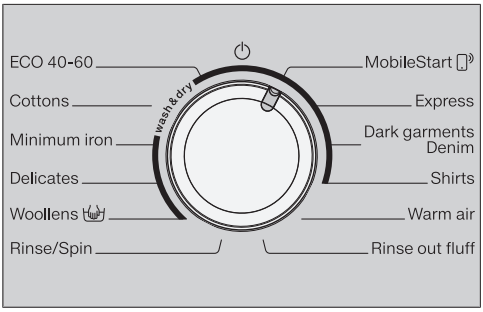

- Turn the programme selector to the *MobileStart* position.

Useful tip: In order to use MobileStart , the washer-dryer must be logged on to the Wi-Fi network and Remote control must be switched on.

Con appears in the time display.

Once the programme has started, the washer-dryer can be operated with the Miele@mobile App.

Selecting drying

- Touch the *Washing* or *Drying* sensor until just the *Drying* sensor is brightly lit up.

The *Washing* sensor must only light up dimly as otherwise the relevant wash programme would begin before the drying process.

4. Selecting programme settings

Selecting the drying level

The preset drying level for a programme can be changed if required.

- Touch the sensor for the required drying level.

- Normal plus
- Normal
- Hand iron

The sensor for the selected drying level lights up brightly.

***Warm air* programme**: Select the drying time with the < or > sensor.

Selecting a thermospin spin speed

The preset spin speed for the thermospin can be changed if required.

- Touch the sensor for the spin speed you want.

The sensor lights up brightly.

Selecting Extras

The sensor for the *Gentle* Extra lights up dimly if the *Gentle* Extra can be selected in addition to the programme.

- Touch the *Gentle* sensor.

The sensor lights up brightly.

Gentle

Delicate textiles such as acrylics are dried gently (care label symbol).

The programme running time will increase when the *Gentle* Extra is selected because of the lower temperature.

Selecting Delay start

You can use Delay start to set the start time for a programme.

- Select a Delay start time if required.

5. Starting the programme

Automatic safety lock

The washing machine has an automatic safety lock. The washing machine can only be started within 60 seconds of the last operational step on the control panel.

If the 60 seconds are exceeded, or if the door is opened and re-closed, the display goes dark and the *Start/Add laundry* sensor control no longer flashes green. To switch the display back on, touch the sensor control.

You then have another 60 seconds in which to start the wash programme.

- Touch the flashing *Start/Add laundry* sensor.

The door will lock and the drying programme will start.

If a Delay start time has been selected, this counts down in the time display. At the end of the Delay start period or immediately after the programme has started, the programme running time will appear in the time display.

Laundry can be added or removed at any time, provided that the symbol is not illuminated in the display (see “Changing the programme sequence – Adding laundry”).

Saving energy

After 10 minutes, the indicators will dim. The *Start/Add laundry* sensor flashes slowly.

You can reactivate the indicators:

- Touch the *Start/Add laundry* sensor (this does not have any effect on a programme that is running).

6. End of the programme/ unloading laundry

At the end of the programme, the drum continues to turn at intervals for up to 150 minutes. The door is locked. The control panel lights up for the first 10 minutes. The control panel then goes out and the *Start/Add laundry* sensor flashes.

- Turn the programme selector to the ⏻ position.

The door will unlock.

If you unload the laundry during the Anti-crease phase, heat can build up.
Spread the laundry out to cool it down.

The door unlocks automatically at the end of the Anti-crease phase.

- Pull open the door.
- Remove the laundry.

Items left in the dryer could be damaged by overdrying when the dryer is used the next time.
Remove all items from the drum.

Useful tip: See "Washing and Drying - After each washing or drying programme".

Programme chart

* Weights are based on the weight of dry laundry.

ECO 40-60	**Max. load 4.0 kg***
Drying levels:	
	Cotton textiles: T-shirts, underwear, baby clothes, workwear, jackets, covers, aprons, overalls, hand towels, bath towels, bathrobes and flannelette/bed linen.
Energy labelling programme according to AS/NZS 2442.1 & AS/NZS 2442.2 (refer to www.energyrating.gov.au website for consumption data).	
Cottons	**Max. load 4.0 kg***
Drying levels: , +	
Items	Single and multi-layered cotton fabric such as towelling, T-shirts, underwear, baby clothes, workwear, jackets, covers, aprons, gowns, flannelette bed linen, towels and bath robes.
Drying levels:	
Items	Cotton or linen fabric requiring further processing, e.g. table linen, bed linen, starched laundry.
Notes	Roll up laundry that you want to machine iron to prevent it from drying out until you are ready for ironing.
Minimum iron	**Max. load 3.5 kg***
Drying levels: , , +	
Items	Minimum iron items made of cotton, synthetic or mixed fibre, e.g. workwear, overalls, jumpers, dresses, trousers, table linen, tights.
Delicates	**Max. load 1.0 kg***
Drying levels: , , +	
Items	Delicate items with the symbol on the care label made of synthetic fibres, easy care cotton or blended fabric, e.g. shirts, blouses, lingerie and evening wear with sequins and beading.
Notes	Reducing the load will reduce creasing.

Drying

Woollens	**Max. load 2.0 kg***
3 minutes	
Items	Woollen garments and textiles containing wool blends, e.g. pullovers, cardigans, stockings.
Notes	- Wool and wool blend items are only fluffed up; they are not dried completely. - Remove garments as soon as the programme has finished.
MobileStart	
Notes	The Miele App is used for selecting programmes and operating the machine.
Express	**Max. load 3.5 kg***
Drying levels:	
Items	Garments suitable for the Cottons programme.
Notes	The programme running time for this programme is particularly short when washing and drying **lightly** soiled laundry in a continuous sequence.
Dark garments/Denim	**Max. load 3.0 kg***
Drying levels:	
Items	Black and dark garments made from cotton, mixed fibres and denim.
Shirts	**Max. load 1.0 kg***
Drying levels:	
Items	Shirts and blouses.
Notes	Turn shirts and blouses inside out, do up buttons and turn collars and cuffs inwards.
Warm air	**Max. load 4.0 kg***
20–120 minutes	
Items	- Multi-layered items whose layers have different drying characteristics, e.g. jackets, pillows, sleeping bags and other voluminous items. - For drying and airing individual items.
Notes	Do not select the longest drying time to start with. Check the items as you are drying them to find the optimal time.
Rinse out fluff	⇨ Rinse out fluff programme

Thermospin

A thermospin is carried out in some drying programmes to reduce energy consumption.

The maximum spin speed for the thermospin is the maximum permitted spin speed for the appropriate wash programme.

The thermospin spin speed can be reduced in some programmes to 900 rpm.

Washing and drying in one continuous sequence

It is advisable to wash and dry in a continuous sequence when the amount of laundry to be washed does not exceed the amount to be dried, and the amount to be dried does not exceed the permitted dry weight for the programme.

It is essential to read the sections “Washing” and “Drying”.

1. Preparing the laundry

- Empty all pockets.
- Sort the laundry according to colour and type of fibre/weave.
- Check the symbols on the care labels.

2. Loading the drum

- Open the door.

Check the drum for pets or foreign objects before loading it with laundry.

- Unfold the laundry and load loosely in the drum.

Detergent dispensing aids, e.g. plastic dispenser balls, can melt during the drying programme and cause damage to the machine and the laundry.
These dispensing aids must be removed from the laundry before drying.

- Close the door.

3. Selecting a programme

- Turn the programme selector and select the required programme.

The control panel lights up.

- Touch the *Washing* and *Drying* sensors until both sensor controls are brightly lit up.

4. Selecting programme settings

- Select the desired spin speed, temperature and drying level.

The sensors for the selected settings light up brightly.

The minimum spin speed cannot be lower than 900 rpm.
For some programmes the spin speed cannot be changed.

- Select Extras as required.

With the thermospin the spin speed displayed for the wash cycle is used.

- Select a Delay start time if required.

5. Adding detergent

- Dispense detergent with CapDosing or via the detergent dispenser drawer.

6. Programme start/finish

- Touch the flashing *Start/Add laundry* sensor.

The door will lock.

The programme will start.

The Anti-crease phase will start at the end of the programme.

The door remains locked during the Anti-crease phase.

- Touch the *Start/Add laundry* sensor or turn the programme selector to the ⏻ position.

The door will unlock.

If you have unloaded the drum during the Anti-crease phase, make sure you spread out the laundry to cool it down.

The door unlocks automatically at the end of the Anti-crease phase.

- Pull the door open and unload the drum.

See "After each washing or drying programme".

After each washing or drying programme

- Open the drum door **fully**.

⚠ Risk of burning due to hot metal.
The metal cap located on the inside of the door glass will be hot after drying.
Do not touch the metal cap.

- Remove the laundry.

Laundry left in the drum could shrink, discolour or be damaged in the next washing or drying programme.
Check that all items have been removed from the drum.

- Check the folds in the door seal for any small articles, e.g. buttons, which might be lodged there. After drying, remove any fluff from around the door seal and the porthole glass.

Useful tip: For safety reasons, close the door when the machine is not in use. Otherwise there is a danger of objects being placed inadvertently in the drum. If these remain unnoticed and were washed in the next load, they could damage the laundry. An open door is also a danger to pets and children.

- Turn the programme selector to the ⏻ position.

Useful tip: Leave the detergent dispenser drawer slightly open to allow it to dry.

Rinse out fluff programme

During drying, fluff is developed and can collect in the drum and suds container. Run the Rinse out fluff programme before the machine is used again so that fluff cannot be deposited on the next load or cause a blockage.

The *Rinse out fluff* programme must not be used for rinsing laundry. Ensure there are no items of laundry in the drum before starting the programme.

- Turn the programme selector to the *Rinse out fluff* programme.

Do not use detergent.

- Touch the *Start/Add laundry* sensor.

Any fluff will be rinsed away within a few minutes.

- If necessary, wipe any remaining fluff off the door seal and door glass.
- Switch the washer-dryer off.

Changing the programme (safety lock)

It is not possible to change the programme, the temperature, the spin speed or the selected Extras after the programme has started. This prevents the appliance being operated unintentionally, e.g. by children.

If the washer-dryer is switched off during active programme operation, the standby function does not switch the washer-dryer off completely after 15 minutes. Safety functions continue to be active because there may still be water inside the drum.

Cancelling a programme

You can cancel a programme at any time after it has started.

- Turn the programme selector to the ⏻ position.

The programme is interrupted.

- Then turn the programme selector to any position.

Rotating bars ... ... appear in the time display.

- During washing

The suds will be pumped away and the programme is cancelled.

The door lock is released.

- During drying

The laundry will be cooled down before the door can be opened.

Removing the laundry

- Wait until the 🔒 symbol in the display goes out and the door is unlocked.
- Pull the door open and unload the drum.

Selecting another programme

- Close the door.
- Select the required programme.
- Add detergent to the detergent dispenser drawer, if necessary.
- Touch the *Start/Add laundry* sensor.

The programme will start.

Adding laundry - AddLoad

You can add or remove items during the first few minutes after the programme has started.

Laundry **cannot** be added if the 🔒 symbol is illuminated in the display.

- Touch the *Start/Add laundry* sensor.

Rotating bars ... ... appear in the time display.

Add appears in the time display.

- Open the door.
- Add or remove laundry.
- Close the door.
- Follow the process for starting a programme again.

The programme will continue.

Laundry cannot be added or removed if:

- The suds temperature is above 55°C
- The water inside the drum is above a certain level

Delay start

Delay start is active when the *P98* SmartGrid programmable function is switched off.

With Delay start you can delay the start of a programme from 30 minutes up to a maximum of 24 hours. This allows you to make use of night-time economy electricity rates, for example.

Setting the Delay start time

- Select the programme required.
- Touch the ⏲ sensor.

The ⏲ sensor lights up brightly.

- Touch the < or > sensor repeatedly until the required Delay start time appears in the time display.

- For below 10 hours, the Delay start time changes in increments of 30 minutes.
- For more than 10 hours, the Delay start time changes in increments of 1 hour.

Starting Delay start

- Touch the flashing *Start/Add laundry* sensor.

The Delay start process starts and counts down in the time display.

Changing or cancelling Delay start

If the selected Delay start function has started, it is no longer possible to change the time.

- Turn the programme selector to the ⏻ position.
- Turn the programme selector to any programme.

Rotating bars [ ] ... [ ] ... [ ] or -0- are shown in the time display.

The Delay start process stops.

- Select a programme and a new Delay start time if required.

SmartStart (only functional in selected countries)

The *SmartStart* function is active when the *P98 SmartGrid* programmable function is switched on.

The SmartStart function lets you define a time period during which your washer-dryer will start automatically based on an external signal. The machine will start on receipt of a signal, e.g. from your energy supplier, that indicates that the electricity rate is particularly economical.

The timeframe can be defined between 30 minutes and 24 hours. During this period, the washer-dryer waits for the external signal. If no signal is sent during the defined period, the washer-dryer starts the programme.

Setting the timeframe

If the *P98* SmartGrid programmable function is activated, the function of the ⏲ sensor changes. The time display no longer shows the Delay start period, and instead shows the time period in which your washer-dryer can be started automatically (see “Programmable functions – *P98* SmartGrid”).

The procedure for setting this is the same as for setting the time for Delay start.

- Touch the ⏲ sensor.
- Set the time period you want using the < or > sensor.
- Touch the Start/Add laundry sensor.

Ctr appears in the time display.

Cleaning the external casing and fascia panel

⚠ Risk of electric shock.
The mains voltage is applied to the washer-dryer even if it is switched off.
Disconnect the machine from the electricity supply before cleaning or maintenance.

⚠ Risk of damage due to ingress of water.
The pressure of a water jet can cause water to get into the washer-dryer, resulting in damage to components.
Do not spray the washer-dryer with a water jet.

⚠ Damage caused by cleaning agents.
Solvent-based cleaning agents, abrasive cleaners, glass cleaners or multi-purpose cleaning agents can cause damage to plastic surfaces and other parts.
Do not use these cleaning agents.

- Clean the casing and control panel with a mild cleaning agent or soap and water and dry both with a soft cloth.
- The drum can be cleaned using a suitable stainless steel cleaning agent following the manufacturer's instructions on the packaging.

Cleaning the detergent dispenser drawer

Washing at low temperatures and the use of liquid detergent can lead to a build-up of mould and bacteria in the detergent dispenser drawer.

- For hygiene reasons, clean the entire drawer at regular intervals.

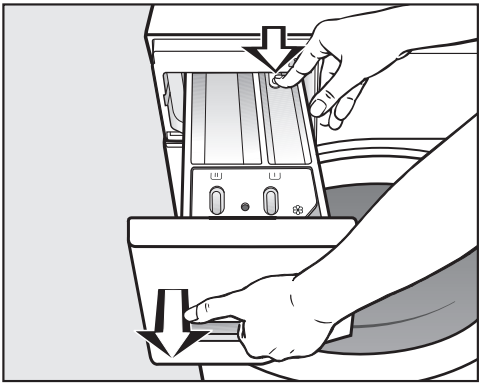

- Pull out the detergent dispenser drawer until a resistance is felt. Press down the release button and at the same time pull the drawer right out of the machine.
- Clean the detergent dispenser drawer with warm water.

Cleaning the siphon and the channel

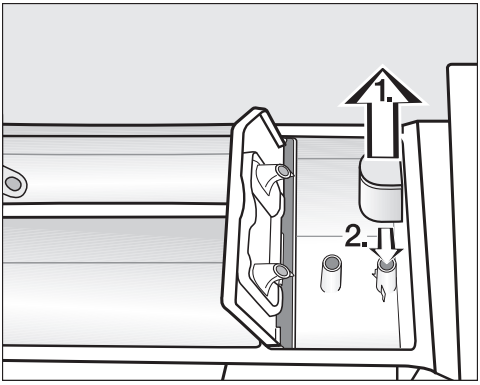

- Pull the siphon out of the ❀ compartment and clean it under warm running water.
- Clean the siphon tube in the same way.
- Refit the siphon.

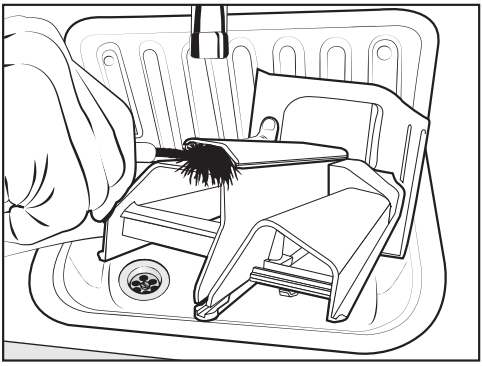

- Clean the fabric softener channel using a brush and warm water.

Liquid starch results in clogging. If clogged, the siphon in the ❀/⌐ compartment will not work and the compartment can overflow.
Clean the siphon particularly thoroughly after using liquid starch a few times.

Cleaning the detergent dispenser drawer housing

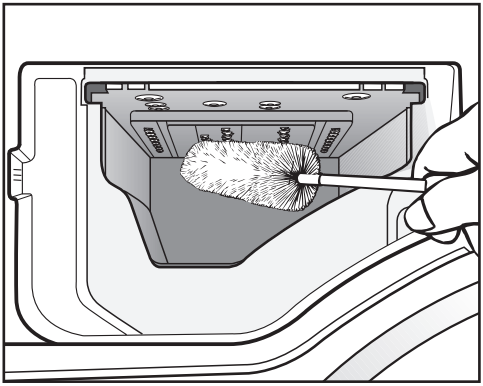

- Use a bottle brush to remove detergent residues and limescale from the jets inside the detergent dispenser drawer housing.
- Replace the detergent dispenser drawer.

Useful tip: Leave the detergent dispenser drawer slightly open to allow it to dry.

Cleaning the porthole glass

- Clean the inside of the porthole glass from time to time and the metal cap inside the porthole glass with a suitable mild cleaning agent or with soapy water.
- Dry both with a soft cloth.

Cleaning the drum

Washing at low temperatures and/or using liquid detergent can cause bacteria and unpleasant odours to build up in the washer-dryer. Use the *Cottons 90°C* programme to clean the washer-dryer. Clean the drum no later than the point at which the **i** indicator light and *1* light up in the time display.

Cleaning the water inlet filter

The washer-dryer has a filter to protect the water inlet valve. The filter at the open end of the water inlet hose should be checked approximately every 6 months. Perform this check more often if there are frequent interruptions to the external water supply.

- First turn off the tap.
- Unscrew the water inlet hose from the tap.

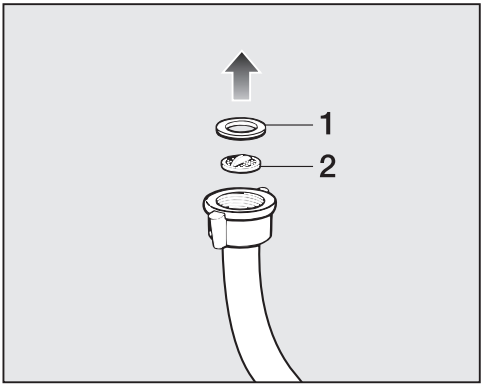

- Remove the rubber seal **1** from the recess.
- Hold the free end of the water inlet hose upside down. The plastic filter **2** will fall out.
- Clean the plastic filter.
- Reassemble in reverse order.
- Turn on the tap and check that the connection is watertight. If water drips out, tighten the connection.

Never forget to put the filter back in place after cleaning.

Descaling the washer-dryer

Descale the washer-dryer regularly depending on the water hardness. Check with your local water supplier if you do not know the water hardness level in your area. We recommend using the Miele descaler to descale the washer-dryer. The descaler is available from the Miele online shop or from Miele Experience Centres.

Cleaning recommendation:

Water hardness	Descaling programmes per year
Soft (I) (0–8.4 °dH)	0–1
Medium (II) (8.4–14 °dH)	1–2
Hard (III) (over 14 °dH)	2–3

Carrying out descaling

The drum must be **empty** and **dry**.

- Open the door.
- Add the descaler directly into the drum. Follow the manufacturer's dispensing recommendation.
- Close the door.
- Select the *Cottons* 90 °C programme.
- Start the programme.

At the end of the programme, the process is complete.

Problem solving guide

Many malfunctions and faults can be easily remedied. You can save time and money in many cases, as you do not need to contact Customer Service.

More information to help you remedy faults yourself can be found at www.miele.com.au/support/customer-assistance or www.miele.co.nz/support/customer-assistance.

A programme cannot be started

Problem	Possible cause and remedy
The control panel remains dark.	There is no power to the machine. ■ Check whether the mains plug is plugged in and switched on. ■ Check whether the circuit breaker has tripped.
	The washer-dryer has switched off automatically to save energy. ■ Switch the washer-dryer on again by turning the programme selector.
F and 34 alternate in the time display.	The door is not closed properly. The door lock could not engage. ■ Close the door again. ■ Start the programme again. ■ If the fault message appears again, contact Miele.

Programme cancellation and fault indicator light

Problem	Possible cause and remedy
The fault indicator light lights up. F and 10 alternate in the time display and the buzzer sounds.	The water inlet is blocked or restricted. ■ Check whether the tap is turned on properly. ■ Check whether the inlet hose is kinked. ■ Check whether there is sufficient water pressure.
	The filter in the water inlet is blocked. ■ Clean the filter.
The fault indicator light lights up. F and 11 alternate in the time display and the buzzer sounds.	The water outlet is blocked or restricted. The drain hose has been fixed too high. ■ Clean the drain filter and the drain pump. ■ Check whether the maximum delivery height of 1 m has been exceeded.

Problem	Possible cause and remedy
The fault indicator light 🚰 lights up. *F* and *138* alternate in the time display and the buzzer sounds.	The water protection system has reacted. ■ Turn off the tap. ■ Call Miele.
***F* and *XXX* alternate in the time display and the buzzer sounds.**	There is a fault. ■ Disconnect the washer-dryer from the electricity supply. Switch off at the wall and withdraw the plug from the socket, or switch off the mains circuit breaker. ■ Wait **at least 2 minutes** before reconnecting the washer-dryer to the electricity supply. ■ Switch the washer-dryer back on. ■ Restart the programme. ■ If the fault message appears again, contact Miele.

Fault indicator light lights up at the end of a programme

Problem	Possible cause and remedy
The indicator light ◒ lights up.	Excessive foam has built up during washing. ■ Use less detergent next time and follow the manufacturer's instructions on dosage given on the packaging.
The ℹ indicator light lights up and *1* appears in the time display.	A wash programme using a temperature above 60°C has not been run for a long time. ■ Run the *Cottons 90°C* programme using the Miele machine cleaner or a multi-purpose powder detergent. This will clean the washer-dryer and prevent a build-up of bacteria and odours.
The ℹ indicator light lights up and *3* appears in the time display.	The *Rinse out fluff* programme has not been used for a long time. ■ Start the *Rinse out fluff* programme as described in “Rinse out fluff programme”.

Problem solving guide

Problem	Possible cause and remedy
The ℹ indicator light lights up and 4 appears in the time display.	There is no laundry in the drum.
	The load is too small. The laundry is still damp because the residual moisture content in the laundry cannot be measured. ■ In the future, use the *Warm air* programme for small amounts of laundry.
	The amount of laundry exceeded the maximum load for the selected programme. ■ Observe the maximum loads listed in the Programme chart.

Symbols in the time display

Message	Possible cause and remedy
-0- is lit up in the time display.	The programme selector was moved to a different position after the programme had started. ■ Turn the programme selector back to the original position.
UP lights up when the washer-dryer is switched on.	An update is available for the washer-dryer. See "Programmable functions – P99 RemoteUpdate" for more information.
Ctr lights up briefly in the time display when a programme is selected.	The washer-dryer is indicating that it is networked.
OFF lights up in the time display when the *MobileStart* programme is selected.	The remote control function is switched off. ■ Activate the remote control programmable function P97 to operate the washer-dryer via the App.
Con lights up in the time display when the *MobileStart* programme is selected.	The washer-dryer is networked and can be operated via the App.
noC lights up in the time display when the *MobileStart* programme is selected.	Miele@home is not set up. ■ Network the washer-dryer; see "Before using for the first time – Setting up Miele@home".

Message	Possible cause and remedy
Cno lights up when the washer-dryer is switched on.	There is a fault. ■ Switch the washer-dryer off. ■ Switch the washer-dryer back on. ■ If Cno appears again, contact Miele. You can continue to use the washer-dryer. ■ Touch the illuminated ◇ sensor.

General problems with the washer-dryer

Problem	Possible cause and remedy
The display is dark.	The display has switched off automatically to save energy (Standby mode). ■ Press any button. This switches Standby off.
The washer-dryer is not steady during a spin cycle.	The machine feet are not level. ■ Level the machine and adjust the feet correctly.
Unusual pumping noises.	This is not a fault. Slurping noises occur at the end of the pump sequence as a normal part of operation.
Spinning sounds during the drying process.	This is not a fault. The machine will spin even during a drying programme (thermospin).
The laundry has not been spun properly and the laundry is still wet.	The machine detected an imbalance during the final spin and reduced the spin speed automatically. ■ Include both large and small items in the load as this will give better distribution.
Large amounts of detergent residue remain in the detergent drawer.	The water pressure is too low. ■ Clean the filters in the water inlet. ■ It may be useful to select the *Water plus* option.
	Powder detergent used in conjunction with water softeners tends to become sticky. ■ Clean the detergent dispenser drawer and, in the future, add washing powder to the dispenser drawer first, and then add the water softener.
Fabric softener is not completely dispensed or too much water remains in the ❀ compartment.	The siphon tube is not correctly positioned or clogged. ■ Clean the siphon (see “Cleaning and care - Cleaning the detergent dispenser drawer”).

Problem solving guide

Problem	Possible cause and remedy
There is water in the fabric softener compartment next to the capsule.	CapDosing was not activated or an empty capsule was not removed at the end of the last wash programme. ■ Make sure that you remember to activate CapDosing the next time you insert a capsule. ■ Remove and dispose of the empty capsule at the end of each programme.
	The small pipe in the detergent dispenser drawer onto which the capsule is placed is blocked. ■ Clean the small pipe.
At the end of the programme there is still liquid in the capsule.	The small pipe in the detergent dispenser drawer onto which the capsule is placed is blocked. ■ Clean the small pipe.
	This is not a fault. For technical reasons a small amount of water will remain in the capsule.
The programme duration remaining that is shown in the display fluctuates.	The countdown time adapts constantly to the current washing and drying situation.
Foam comes out of the detergent dispenser drawer while the *Rinse out fluff* programme is running.	There is residual detergent from the last programme in the suds container. ■ Make sure you always dispense the correct amount of detergent. ■ Follow the detergent manufacturer's dosage recommendations.
There is foam in the drum at the end of the *Rinse out fluff* programme.	The *Rinse out fluff* programme also rinses out residual detergent from the suds container. This can lead to the formation of foam. ■ Run the *Rinse out fluff* programme regularly to prevent detergent residues from accumulating in the suds container.
There is still fluff in the drum after the end of the *Rinse out fluff* programme.	You have not run the *Rinse out fluff* programme for a long time. ■ Remove the fluff from the drum. ■ Run the *Rinse out fluff* programme on a regular basis.

Problem	Possible cause and remedy
The washer-dryer smells.	The ℹ indicator light was ignored. A wash programme using a temperature above 60°C has not been run for a long time. ■ In order to prevent bacteria and unpleasant odours building up in the washer-dryer, run the *Cottons 90°C* programme using the Miele IntenseClean machine cleaner or multi-purpose powder detergent.
	The detergent dispenser drawer was left closed after washing. ■ Leave the detergent dispenser drawer slightly open to allow it to dry.

An unsatisfactory wash result

Problem	Possible cause and remedy
White residues which look like powder detergent are seen on dark textiles after washing.	The detergent contains compounds (zeolites) to aid water softening which are not soluble in water. These have ended up on the laundry. ■ Try and brush off the residues with a soft brush once the laundry is dry. ■ In the future, wash dark textiles with a detergent which contains no zeolites. Liquid detergents do not usually contain zeolites. ■ Use the *Dark garments* programme.
Grey, greasy particles cling to washed laundry.	Insufficient amounts of detergent were used. The laundry was heavily soiled with grease (oils, ointments). ■ Use more detergent or liquid detergent with this type of soiled laundry. ■ Before washing the next load, run the *Clean machine* programme using the Miele machine cleaner or a powder detergent.

Unsatisfactory drying result

Problem	Possible cause and remedy
The laundry is too damp after a drying cycle.	The load is too small. The electronics could not assess the residual moisture correctly. ■ In the future, use the *Warm air* programme for small amounts of laundry.
	During the spin cycle, the laundry formed a ring in the drum because the laundry was distributed unevenly. The laundry formed a ring during the thermospin because it was too damp or because the spin speed was set too high. ■ Open the door and loosen the laundry. ■ Start the drying programme again with a lower spin speed.
The laundry feels damp after drying.	Warm laundry can feel damp. ■ Spread the laundry out to cool it down.
The laundry is too damp or too dry after a drying cycle.	The desired residual moisture level is between two drying levels. ■ Change the level of drying as described in “Settings - Drying levels”.
There is still water in the drum after drying.	There is a blockage in the water outlet. ■ Clean the drain filter and the drain pump as described in “Opening the door in the event of a blocked drain outlet and/or power cut” and check the height of the drainage point.

The door will not open

Problem	Possible cause and remedy
The door cannot be opened while a programme is running.	The door is locked during a programme. ■ Follow the instructions in “Changing the programme sequence – Adding laundry”.
	There is still water in the drum and the washer-dryer is unable to drain. ■ Clean the drain filter and the drain pump as described in “Opening the door in the event of a blocked drain outlet and/or power cut”.
	The water level in the drum is too high. ■ Cancel the programme. The water will be pumped away.
The door cannot be opened at the end of the programme or after a programme cancellation. Flashing bars [ ]...[ ]...[ ]... are shown in the time display.	The door cannot be opened for safety reasons. The temperature in the drum exceeds 55°C during washing or 70°C during drying. ■ Wait until the temperature in the drum has decreased and the door is unlocked.
The door will not unlock. F and 35 alternate in the time display.	The door lock has jammed. ■ Call Miele.

Opening the door in the event of a blocked drain outlet and/or power cut

- Switch the washer-dryer off.

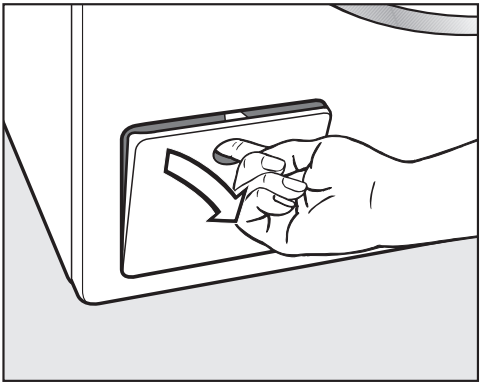

- Open the drain pump access panel.

Blocked drain outlet

If the drain outlet is blocked, a large quantity of water can remain in the washer-dryer.

> ⚠ Risk of scalding due to hot suds.
> Escaping suds will be hot if laundry has been washed at high temperatures.
> Drain the suds carefully.

Draining water from the machine

> Remove the drain filter, though not completely.

- Place a suitable container under the access panel, e.g. a universal oven tray.

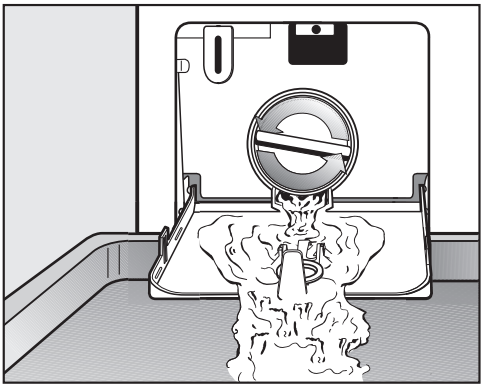

- Slowly and carefully unscrew the filter to let the water out. Be careful not to release too much water at once. If the flow of water is too strong, some water can seep into the machine base and activate the water protection float switch. This will prevent the machine from functioning.
- Tighten the drain filter back up again if you need to interrupt the flow of water.

Once the flow of water ceases:

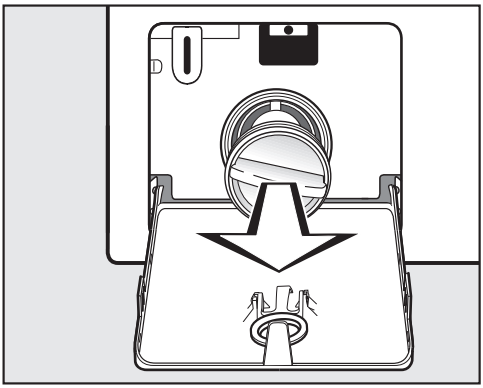

- Remove the drain filter completely.

Cleaning the drain filter

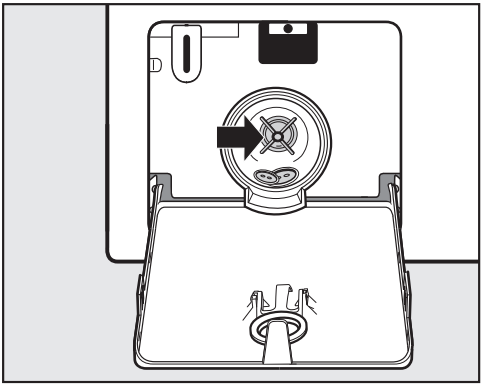

- Clean the drain filter thoroughly.
- Remove any foreign objects (e.g. buttons, coins, etc.) and clean the interior.
- Turn the impeller by hand to check that they rotate freely.
- Put the drain filter back in place and secure it.

⚠ Risk of damage from leaking water.
Water will escape from the washer-dryer if you forget to replace the drain filter.
Replace the drain filter correctly and tighten it securely.

Opening the door

⚠ Danger of injury due to rotating drum!
Reaching into a moving drum is extremely dangerous. Danger of injury!
Always make sure that the drum is stationary before reaching in to remove laundry.

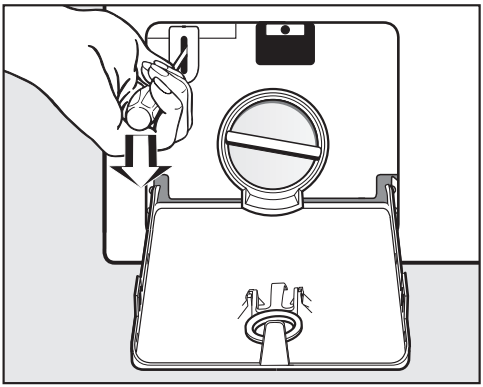

- Use a screwdriver to unlock the door of the appliance as shown.
- Pull open the door.

You can find information on how to remedy faults yourself at www.miele.com.au/support/customer-assistance or www.miele.co.nz/support/customer-assistance and about Miele spare parts at www.miele.com.au/service or www.miele.co.nz/service.

Contact in case of fault

In the event of any faults which you cannot remedy yourself, please contact Miele.

You can book a Miele customer service call-out online at www.miele.com.au/service or www.miele.co.nz/service.

Contact information for Miele can be found at the end of this booklet.

Please quote the model and serial number of your appliance when contacting Miele. This information can be found on the data plate.

The data plate is found above the porthole glass when the door is opened.

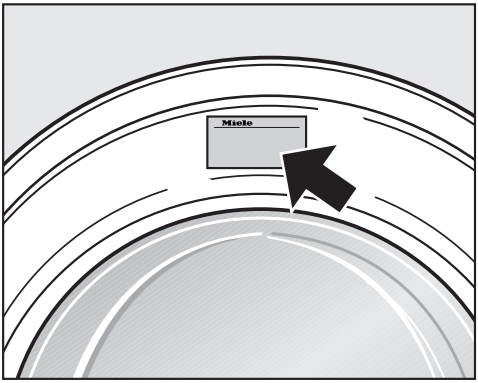

Optional accessories

Products specially tailored to your washer-dryer – such as detergent and accessories – are available from the Miele online shop and Miele Customer Service.

You can access the Miele online shop via the following QR code:

Warranty

The manufacturer's warranty for this appliance is 2 years.

For further information, please refer to your warranty booklet.

Washing	
The figure quoted in the bucket is the maximum temperature at which the garment can be washed.	
95	Normal agitation
60	Reduced agitation
30	Much reduced agitation
	Hand wash
	Do not wash

Programme selection examples

Programme	Garment care label symbols
ECO 40-60	40 60
Cottons	95 70 60 50 40 30
Minimum iron	95 60 50 40 30
Delicates	40 30
Woollens	

Drying	
	Normal temperature
	Low temperature
	Do not tumble dry

Ironing	
	Approx. 200 °C
	Approx. 150 °C
	Approx. 110 °C Ironing with steam can cause irreversible damage.
	Ironing prohibited

Professional cleaning	
F P	Dry clean only. The letters indicate the type of cleaning agent required.
W	Wet cleaning
	Dry cleaning prohibited

Bleaching	
	Any oxidation bleach can be used
	Use oxygen bleach only
	Do not bleach

Front view

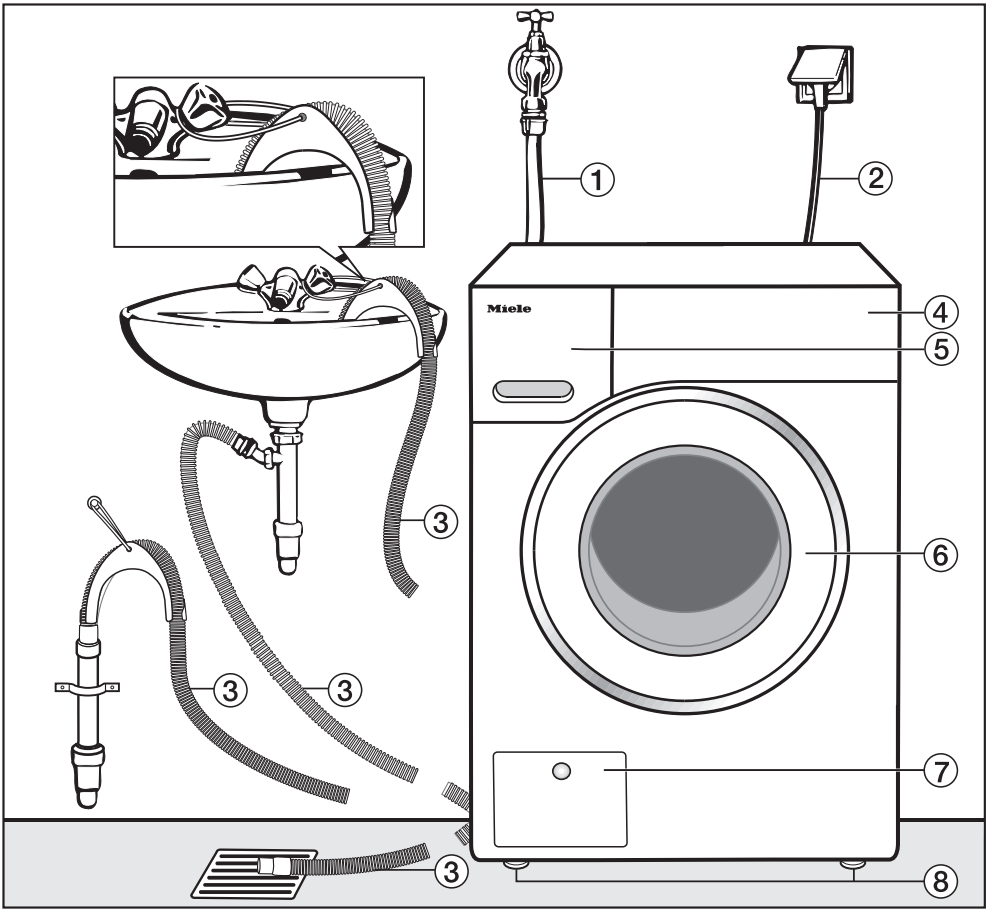

① Water inlet hose

② Electrical connection

③ Flexible drain hose (with detachable swivel elbow)

④ Control panel

⑤ Detergent dispenser drawer

⑥ Door

⑦ Access to drain filter, drain pump and emergency release

⑧ 4 height-adjustable feet

Rear view

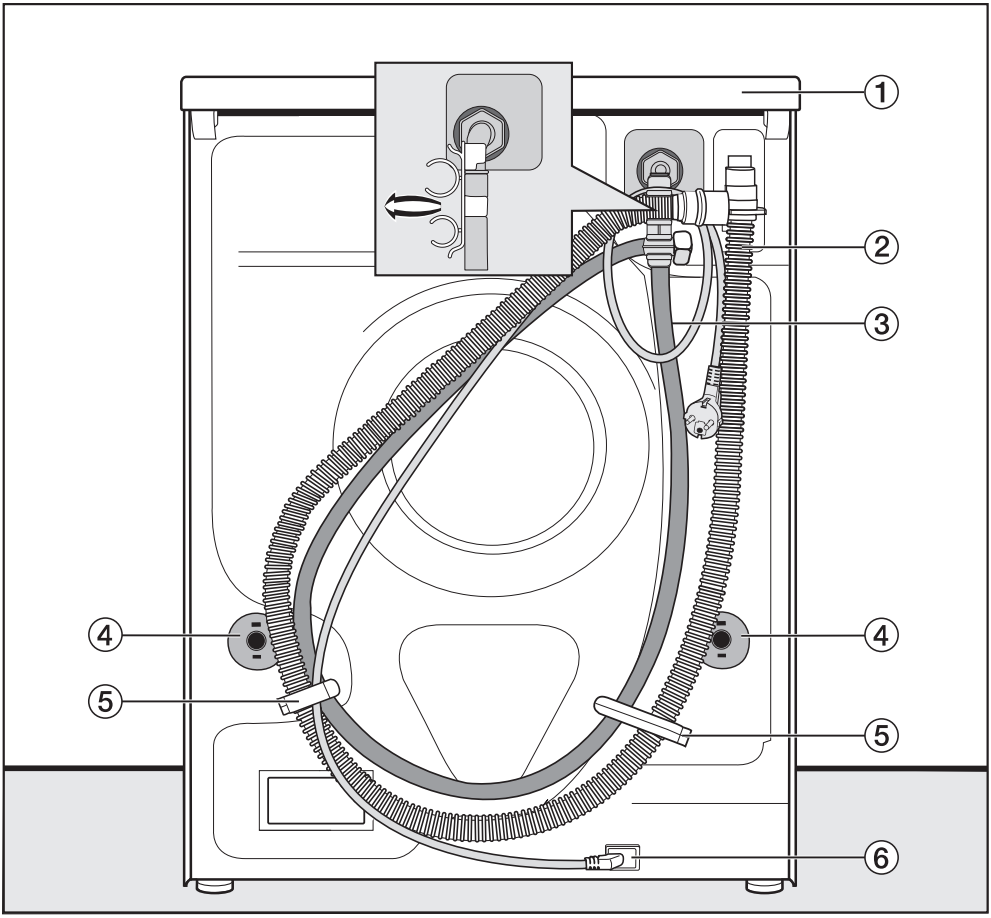

① Protruding lid for holding when moving the machine

② Drain hose

③ Water inlet hose

④ Safety caps for transit bars

⑤ Transport clips for water inlet hoses and drain hoses

⑥ Electrical connection

Installation surface

A concrete floor is the most suitable installation surface. It is far less prone to vibration during the spin cycle than wooden floorboards or a carpeted surface.

Please note:

- The washer-dryer must be level and securely positioned.
- To avoid vibrations during spinning the washer-dryer must not be installed on soft floor coverings.

If installing on a wooden joist floor, please note:

- Check for the presence of pipes and cables first.
- Use a plywood base underneath the washer-dryer (at least 59 x 52 x 3 cm). The base must span several joists and be bolted to the joists and not only to the floorboards.

Useful tip: If possible, install the washer-dryer in a corner of the room, as this is usually the most stable part of the floor.

Carrying the washer-dryer to its installation site

⚠ Danger of injury due to unsecured lid.

Make sure the fixings at the back of the lid are secure. They may become brittle due to external circumstances. There is a danger of the lid being pulled off when carrying the appliance.

Before carrying the machine, check that the lid is secure where it protrudes at the back of the machine.

- Carry the washer-dryer by the front feet and by the lid where it protrudes at the back of the appliance.

Removing the transit bars

Removing the transit bars

Remove the left-hand transit bar first, followed by the right-hand transit bar.

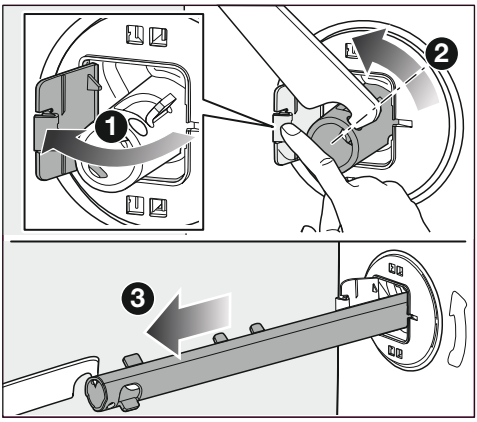

❶ Push the cover out.

❷ Using the spanner supplied, turn the transit bar 90°.

❸ Then pull the transit bar out.

- Remove the right-hand transit bar in the same way.

Covering the holes

⚠ Risk of injury from sharp edges.

There is a risk of injury from reaching into holes that are not covered.

After removing the transit bars, cover the exposed holes.

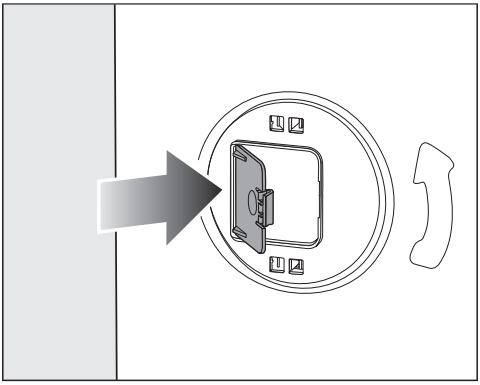

- Press the covers firmly shut until they click into place.

Refitting the transit bars

⚠ Risk of damage from incorrect transport.

The washer-dryer may become damaged if moved without the transit bars in place.

Keep the transit bars in a safe place. Fit them again if the washer-dryer is to be moved (e.g. when moving house).

Opening the flaps

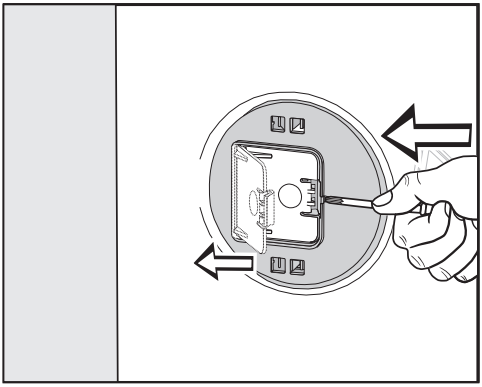

- Push against the catch with a pointed object, e.g. a narrow screwdriver.

The flap will open.

Fitting the transit bars

- Install the transit bars in reverse order to their removal.

Useful tip: If you lift the drum slightly, the transit bars can be pushed in more easily.

Additional installation requirements

Installing under a continuous worktop

Building under kits* must only be installed/dismantled by a specialist.

- A special **building under kit*** is required. The cover plate included in the building under kit* replaces the lid of the washer-dryer. It is necessary to fit the cover plate for electrical safety reasons.
- Connections for electricity, water and drainage should be installed in such a way that they remain accessible when the washer-dryer is in its final position.

The building under kit includes installation instructions.

* Optional accessories

Levelling the washer-dryer

The washer-dryer must stand perfectly level on all four feet to ensure safe and proper operation.

Incorrect installation may increase electricity and water consumption and may cause the machine to move about.

⚠ The appliance must not be installed behind a lockable door, a sliding door or a door with a hinge on the opposite side to that of the appliance, in such a way that a full opening of the appliance door is restricted.

Screwing out and adjusting the feet

The 4 adjustable feet are used to level the washer-dryer. All four feet are screwed in when the appliance is delivered.

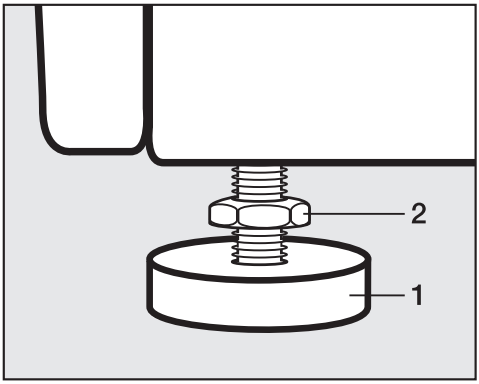

■ Using the spanner supplied, turn counter nut **2** in a clockwise direction. Then turn counter nut **2** together with foot **1** to unscrew.

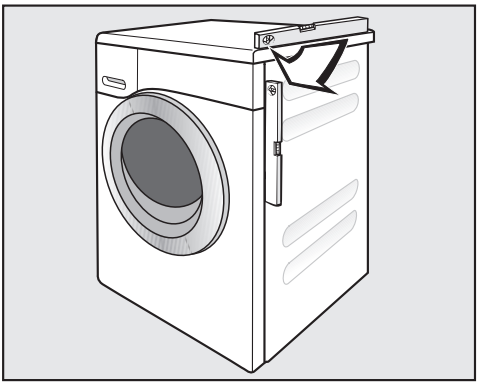

- Use a spirit level to check the washer-dryer is standing level.
- Hold foot **1** securely with a pipe wrench. Turn counter nut **2** again using the spanner supplied until it sits firmly up against the housing.

⚠ Risk of damage from incorrectly aligned washer-dryer.
There is a danger of the washer-dryer moving about if the feet are not secured.
Turn all 4 counter nuts for the feet until they sit firmly up against the casing. Please also check this for the feet which did not need adjustment.

The Miele water protection system

The water protection system protects all parts of the washer-dryer from water damage.

The system consists of three main components:

- the inlet hose
- the electronic unit, and the drainage and overflow protection
- the drain hose

Inlet hose

- Protected from bursting

  The inlet hose can withstand pressure of more than 7000 kPa.

Electronic unit and machine housing

- Sump

  Any leaking water is collected in a sump in the base of the machine. A float switches off the water inlet valves. Further water intake is blocked. The water inside the suds container is pumped out.

- Overflow protection

  This prevents the machine from taking in too much water and overflowing. If the water level exceeds a certain level, the drain pump switches on and pumps the excess water away.

Drain hose

The drain hose is protected by a ventilation system which prevents the machine from being emptied completely.

Water intake

⚠ Health risk and risk of damage due to contaminated incoming water.
The quality of the water used must correspond to the drinking water specification of the country in which the appliance is being operated.
Always connect the appliance to potable water.

The washer-dryer must be connected to a mains water supply in accordance with current local and national safety regulations.

The water inlet pressure must be at least 100 kPa and must not exceed an overpressure of 1000 kPa. If the pressure exceeds 1000 kPa, a pressure reducing valve must be installed.

Connection to the mains water supply should incorporate a water tap with a ¾" threaded union. If no tap is available, only a qualified installer may connect the washer-dryer to the mains water supply.

The connection point is subject to mains water pressure.
You should turn on the tap slowly and check for leaks. Correct the position of the seal and screw thread if water escapes.

The washer-dryer is **not** suitable for connection to a hot water supply.

Maintenance

Only use a genuine Miele hose that has been pressure tested to withstand at least 7,000 kPa should you ever need a replacement.

The dirt filter in the union nut at the open end of the water inlet hose protects the water intake valve.
This filter must not be removed.

Hose extension

Longer hoses 2.5 m or 4.0 m in length are available from Miele as optional accessories.

Drainage

The suds are drained through a drain pump with a 1 m delivery head. For the water to drain freely, the hose must be installed free of kinks. The elbow piece supplied hooks onto the end of the hose. If required, the hose can be extended to a length of up to 5 m. The necessary parts can be purchased from Miele.

For a delivery head of more than 1 m (up to a max. of 1.8 m) a replacement drain pump will need to be fitted. Please contact Miele for advice. In this case the hose can be extended to a maximum of 2.5 m. The necessary parts can be purchased from Miele.

Drain hose connection options

1. Directed into a sink or basin.
   Please note:
   – Hook the hose over the edge and secure it.
   – Make sure that the water can drain away freely without hindrance. Otherwise there is a risk of water overflowing or of some of the drained water being sucked back into the machine.
2. Connected securely to a plastic drain pipe with a rubber nipple (there is no need to use a siphon).
3. Connected securely to a floor drain (gully).
4. Connected securely to a standpipe.

Connecting to a washbasin

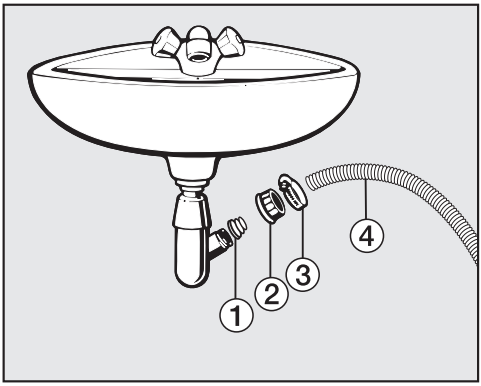

① Adapter

② Washbasin nut

③ Hose clip

④ End of the hose

- Fit the adapter ① to the sink drain outlet using the nut ②.
- Attach the end of the hose ④ to the adapter ①.
- Use a screwdriver to tighten the hose clip ③ up close to the nut.

Electrical connection

The washer-dryer is supplied with a mains cable with moulded plug ready for connection to an earthed socket.

The socket must be easily accessible after the washer-dryer has been installed. If the socket is not easily accessible, ensure that a suitable means of disconnection is provided on the installation side for each pole.

⚠ Risk of fire from overheating.
Connecting the washer-dryer to a multi-socket adapter or to an extension lead can overload the cable.
For safety reasons, do not use an extension cable or multi-socket adapter.

All electrical work must be carried out by a suitably qualified and competent person in strict accordance with national and local safety regulations.

For safety reasons, we recommend using a type residual current device (RCD) in the assigned electrical installation for connecting the washer-dryer.

If the power supply cord is damaged, it must only be replaced with a specific power supply cord of the same type (available from Miele Customer Service). For safety reasons, replacement may only be carried out by a suitably qualified specialist or Miele Customer Service.

These operating instructions and the data plate indicate the nominal power consumption and the appropriate fuse rating. Compare this information with the data of the on-site electrical connection.
If in any doubt, consult a qualified electrician.

Temporary or permanent operation with a self-sufficient or non-mains synchronous energy supply system (e.g. isolated networks, back-up systems) is possible. A requirement for the operation is that the energy supply system complies with all current local and national requirements that apply to stand-alone, solar and/or battery systems.
The protective measures provided in the domestic installation and in this Miele product must also be assured in their function and operation in isolated operation or in non-mains synchronous operation, or replaced with equivalent measures in the installation.

Height	850 mm
Width	596 mm
Depth	637 mm
Depth with door open	1055 mm
Height for building under	820 (+8/-2) mm
Width for building under	600 mm
Weight	Approx. 95 kg
Capacity, washing Capacity, drying	8.0 kg dry laundry 4.0 kg dry laundry
Supply voltage	See data plate
Rated load	See data plate
Fuse rating	See data plate
Consumption data	See “Consumption data”
Minimum water connection pressure	100 kPa (1 bar)
Maximum water connection pressure	1000 kPa (10 bar)
Water inlet hose length	1.55 m
Drain hose length	1.50 m
Power supply cord length	2.00 m
Maximum delivery head	1.00 m
Maximum drainage length	5.00 m
LEDs	Class 1
Test certifications awarded	See data plate
Frequency band of the Wi-Fi module	2.4000–2.4835 GHz
Maximum transmission power of the module	< 100 mW

Consumption data

Programmes		Load kg	Energy kWh	Water Litres	Duration h:min	Temperature[1] °C	Residual moisture %	Spin speed rpm
Washing								
Cottons	60	8.0	1.35	57	2:29	54	51	1500
	20	8.0	0.35	72	2:39	20	51	1500
Minimum iron	30	3.5	0.32	47	1:59	30	30	1200
Express[2]	40	3.5	0.33	30	0:20	27	60	1200
Woollens	30	2.0	0.23	35	0:39	–	–	–
Drying								
Cottons		4.0	2.03	17	2:06	–	–	–
Minimum iron		3.5	1.22	11	1:21	–	–	–

[1] Maximum laundry temperature reached in main wash.

[2] *Short* Extra activated

Information for customers:

Consumption data can vary from the nominal values listed depending on water pressure, water hardness, water inlet temperature, room temperature, type and volume of load, fluctuations in the electricity supply and any Extras selected.

The programmable functions are used to alter the washer-dryer's electronics to suit changing requirements. Programmable functions can be altered at any time.

Programming is carried out in 9 steps (❶, ❷, ❸ ... ❾) using the sensors.

Opening the programming level

Before you begin, ensure the following:

- The washer-dryer is switched on and the programme selector is pointing to a programme.
- The door of the washer-dryer is open.

❶ Touch the *Start/Add laundry* sensor and hold it down whilst carrying out steps ❷–❸.

❷ Close the washer-dryer door.

❸ Wait until the *Start/Add laundry* sensor lights up constantly ...

❹ ... and then release the *Start/Add laundry* sensor.

After a few seconds, *P13*, for example, will light up in the time display.

Choosing and selecting programmable functions

The number of the programmable function will appear in the display as *P* and a number: e.g. *P13*.

❺ Touch the < or > sensor to scroll to the next or previous programmable function:

Programmable functions	
P11	Buzzer duration
P12	Buzzer
P13	Keypad tone
P14	PIN code
P22	Display switch-off status
P24	Memory
P28	Gentle action
P29	Temperature reduction
P32	Maximum rinse level
P33	Suds cooling
P49	Low water pressure
P62	Display brightness
P70	Cottons drying level
P71	Minimum iron drying level
P72	Extended cool down
P77	Compressed laundry protection
P90	Operating hours
P97	Remote control
P98	SmartGrid
P99	RemoteUpdate
P00	Factory default setting

❻ Confirm the selected programmable function by touching the *Start/Add laundry* sensor.

Editing and saving the programmable function

You can switch a programmable function on/off or select different options.

❼ Touch the < or > sensor to switch a programmable function on/off or to select an option.

Programmable function	Available options					
	-00	-01	-02	-03	-04	-05 to -07
P11		●	●			
P12	●	●	●			
P13	●	●	●			
P14	●	●				
P22	●	●				
P24	●	●				
P28	●	●				
P29	●	●				
P32	●	●				
P33	●	●				
P49	●	●				
P62		●	●	●	●	●
P70		●	●	●	●	●
P71		●	●	●	●	●
P72	●	●	●	●	●	-05 to -18
P77	●	●	●	●	●	
P97	●	●				
P98	●	●				
P99	●	●				
P00	●	●				

❽ Confirm your selection with the *Start/Add laundry* sensor.

The number of the programmable function, e.g. P13, will light up again.

Exiting the programming level

❾ Turn the programme selector to the ⏻ position.

The settings have been changed. You can alter the settings again at any time.

P11 Buzzer duration

The buzzer sounds to let you know the programme has finished. You can decide how long the buzzer should sound for.

Options

-01 = The buzzer sounds 3 times at the end of the programme.

-02 = The buzzer sounds until the washer-dryer switches off automatically (max. 1 hour).

P12 Buzzer

The buzzer sounds to let you know the programme has finished.

Options

-00 = Off

-01 = On - Quiet

-02 = On - Loud

P13 Keypad tone

The tone that sounds when a sensor is pressed can be switched on or off.

Options

-00 = Off

-01 = On - Quiet

-02 = On - Loud

P14 PIN code

The PIN code prevents your washer-dryer being used without your knowledge.

When the PIN code has been activated, you have to enter the code after switching the washer-dryer on. Otherwise the washer-dryer cannot be operated.

Options

-00 = Off

-01 = On

If the -01 option has been selected, you will have to enter the PIN code before you can operate the washer-dryer.

Using the washer-dryer when the PIN code is activated

The code is **125** and cannot be altered.

- Switch the washer-dryer on.

0 _ _ appears in the time display and the > and < sensors light up.

- Touch the > sensor.

1 _ _ appears in the time display.

- Confirm the number with the *Start/ Add laundry* sensor.

The first number has been saved.

- Enter the second and third numbers using the > and < sensors and confirm the numbers with the *Start/ Add laundry* sensor.

The lock function is deactivated.

P22 Control panel switch-off status

To save energy, the time display and sensors will go out after 10 minutes, and only the *Start/Stop* sensor will flash slowly.

Options

-00 = Off
The time display and sensors will remain lit up while the washer-dryer is switched on.

-01 = On
The time display and sensors will switch off 10 minutes after the programme has started.

However, the time display and sensors will remain lit up for 10 minutes after a Delay start time has elapsed, after the end of a programme, or at the end of the Anti-crease phase.

P24 Memory

The washer-dryer will save the last settings selected for a programme (temperature, spin speed) after the programme has started.

The next time the programme is selected these saved settings will appear in the display.

Options

-00 = Off

-01 = On

P28 Gentle action

With Gentle action activated, drum agitation is reduced. In this way, lightly soiled items can be washed more gently.

Gentle action can be activated for the *Cottons* and the *Minimum iron* wash programmes.

Options

-00 = Off

-01 = On

P29 Temperature reduction

At high altitudes water has a lower boiling point. Miele recommends activating the reduced temperature setting at altitudes of 2000 m or above to prevent water from boiling.

Options

-00 = Off

-01 = On

P32 Maximum rinse level

The water level in the rinses can be permanently set to the highest value in the *Cottons* and *Minimum iron* programmes.

This function is important for allergy sufferers as it achieves excellent rinse results. The water consumption will be increased.

Options

-00 = Off

-01 = On

P33 Suds cooling

Additional water flows into the drum at the end of the main wash to cool the suds down. Hot suds can damage plastic drainage pipes.

Suds cooling takes place when a *Cottons* programme with a temperature of 70°C or higher is selected.

Suds cooling should be activated:

- to prevent the danger of scalding if the drain hose is hooked over the edge of a sink or laundry tub.
- where the drainage pipes are rated less than 70°C.

Options

-00 = Off

-01 = On

P49 Low water pressure

If the water pressure is below 100 kPa (1 bar), the washer-dryer will stop the programme and a water intake fault message will appear in the display. If the on-site water pressure cannot be increased, activating this setting will prevent the programme from being cancelled.

Options

-00 = Off

-01 = On

P62 Display brightness

The brightness of the dimmed sensors in the control panel can be set to one of 7 different levels.

The brightness will change as soon as a different setting is chosen.

Options

-01 = Darkest level

↓

-07 = Brightest level

P70 Cottons drying levels

You can adjust the drying levels for the Cottons programme if needed.

Options

-01 = Damper

↓

-07 = Drier

P71 Minimum iron drying levels

You can adjust the drying levels for the Minimum iron programme if needed.

Options

-01 = Damper

↓

-07 = Drier

P72 Extended cool down

The cooling down phase which takes place before the end of a programme can be extended if required. This cools the garments down even more. The cooling down phase can only be extended if a drying level has been selected. Extended cool down is not active for timed drying.

Options

-00 = Minutes

↓

-18 = Minutes

P77 Compressed laundry protection

The maximum final spin speed can be limited to prevent laundry forming a ring around the drum.

The *Compressed laundry protection* setting is only effective with continuous washing and drying.

Options

-00 = Off

-01 = 1200 rpm

-02 = 1100 rpm

-03 = 1000 rpm

-04 = 900 rpm

P90 Operating hours

You can read off how many hours your washer-dryer has been in operation for.

The total operating time is shown in the time display in single digits. The washer-dryer has been in operation for 1234 hours, for example. The figure shown in the time display will start with an H followed by a 1, then a 2 and after this a 3 and a 4. The letter H is displayed again after this.

P97 Remote control

You can use the Miele App to check the status of your washer-dryer from anywhere and start it remotely. You can also control it remotely via the *MobileStart* programme.

You can switch off the P97 programmable function if you do not want to operate the washer-dryer with your mobile device.

If the P97 programmable function is not switched on, the App can still be used to cancel the programme.

Use the ⏲ sensor to set a time period within which you want to start the washer-dryer and start the Delay start function (see “Delay start/SmartStart”). The washer-dryer will then start within the specified timeframe when it receives your signal. If it has not received a start signal by the latest start time set, the washer-dryer will start automatically.

Options

-00 = Off

-01 = On

P98 SmartGrid (only functional in selected countries)

You can set your washer-dryer to start automatically based on an external signal within a certain time period.

If you have activated *SmartGrid*, the ⏲ sensor will have the new *SmartStart* function instead of the *Delay start* function.

Use the ⏲ sensor to set a SmartStart time period. The washer-dryer will then start within the time period specified by you when it receives an external signal. If an external signal has not been received by the latest start time set, the washer-dryer will start automatically (see “Delay start/SmartStart”).

Options

-00 = Off

-01 = On

P99 RemoteUpdate

The RemoteUpdate function is used for updating the software in your washer-dryer. If an update is available for your washer-dryer, it will automatically download it. Updates will not be installed automatically. They must be initiated manually.

If you do not install an update, you can continue to use your washer-dryer in the usual way. However, Miele recommends installing updates.

RemoteUpdate procedure

Information about the content and scope of an update is provided in the Miele App.

The message *UP* will appear in the time display if an update is available.

You can install the update immediately or postpone this until later. When the washer-dryer is switched on again, you will be reminded about the update.

The update may take several minutes.

Please note the following about the RemoteUpdate function:

- You will only receive a message when an update is available.
- Once an update has been installed, it cannot be undone.
- Do not switch off the washer-dryer during an update. Otherwise, the update will be aborted and will not be installed.
- Some updates can only be carried out by a Miele service technician.

Activating/Deactivating

The *RemoteUpdate* function is activated as standard. A new update will be downloaded automatically but will only be installed if you initiate installation manually. Deactivate the *RemoteUpdate* function if you do not want any updates to be downloaded automatically.

Options

-00 = Off

-01 = On

Starting the update

After the washer-dryer is switched on, *UP* appears in the time display.

■ Touch the *Start/Add laundry* sensor.

UP will flash in the time display. The update starts.

Bars in the time display show the progress of the update:

I = 0%

IIIIII = 100%

Postponing the update

After the washer-dryer is switched on, *UP* appears in the time display.

■ Touch the ⏱ sensor.

The running time of the selected programme appears in the time display.

The next time you switch on the appliance, you will be prompted to start the update again.

P00 Factory default setting

All programmable functions except P90 operating hours are reset to the factory default settings.

Options

-00 = Go back (without reset to factory default settings)

-01 = Reset programmable functions to the factory default settings

Switching off Wi-Fi

■ Turn the programme selector to the *MobileStart* programme.

Con appears in the time display.

■ Touch ⏱ and hold the ⏱ sensor until the countdown in the time display has finished.

--- appears in the time display.

- The Wi-Fi is switched off.
- The Wi-Fi connection will be reset to the factory setting.

The network configuration should be reset whenever a washer-dryer is being disposed of or sold, or if a used washer-dryer is being put into operation. This is the only way to ensure that all personal data has been removed and, in the case of the latter, the previous owner will no longer be able to access the appliance.

A new connection set-up has to be carried out in order to use Miele@home again.

Copyright and licences for the communication module

For the purpose of operating and controlling the communication module, Miele uses proprietary or third-party software that is not covered by open source licensing terms. These items of software/software components are protected by copyright. The copyright powers of Miele and third parties must be respected.

In addition, the communication module contains software components which are distributed under open source licensing terms. The open source components contained in the appliance along with the corresponding copyright notices, copies of the licensing terms valid at the time, and any further information can be accessed locally via IP using a web browser *(http://<IP address>/Licenses)*, where <IP address> is the IP address of the appliance. The liability and warranty arrangements for the open source licences displayed in this location only apply in relation to the respective rights holders.

Miele Australia Pty. Ltd.
ACN 005 635 398
ABN 96 005 635 398

Level 4, 141 Camberwell Road
Hawthorn East, VIC 3123

1300 464 353 (1300 4 MIELE)
info@miele.com.au
www.miele.com.au

Miele New Zealand Limited
IRD 98 463 631

8 College Hill
Freemans Bay, Auckland 1011

0800 464 353 (0800 4 MIELE)
customercare@miele.co.nz
www.miele.co.nz

Miele Global Headquarters
Germany
Miele & Cie. KG
Carl-Miele-Straße 29
33332 Gütersloh
Federal Republic of Germany

Miele

WTD 161

en-AU, NZ

M.-Nr. 12 959 320 / 00 / 002