HONDA

WATER PUMP

# WT20/30

Click here to save this manual to your computer.

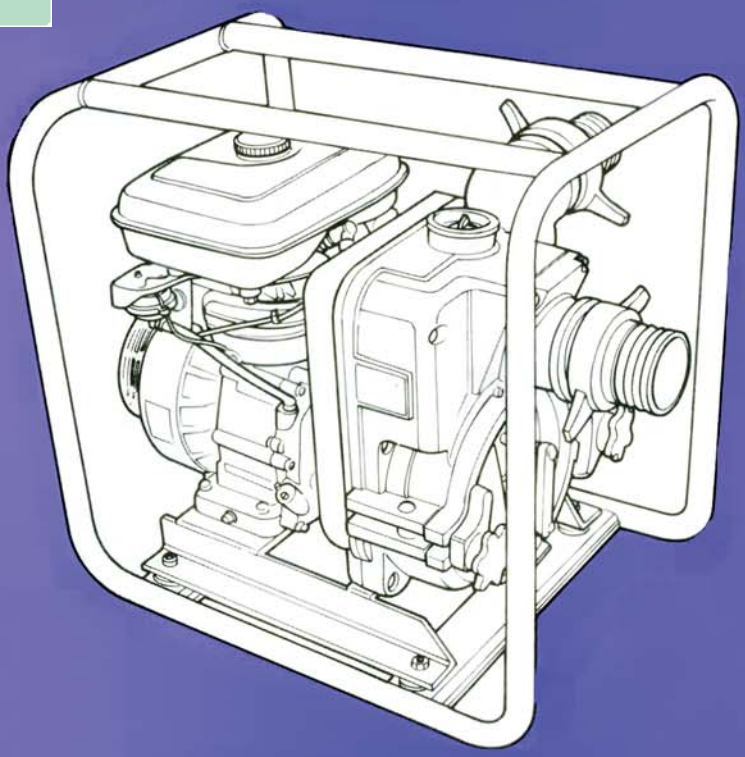

ALL INFORMATION, ILLUSTRATIONS, DIRECTIONS AND SPECIFICATIONS INCLUDED IN THIS PUBLICATION ARE BASED ON THE LATEST PRODUCT INFORMATION AVAILABLE AT THE TIME OF APPROVAL FOR PRINTING. HONDA MOTOR CO., LTD RESERVES THE RIGHT TO MAKE CHANGES AT ANY TIME WITHOUT NOTICE AND WITHOUT INCURRING ANY OBLIGATION WHATEVER.

NO PART OF THIS PUBLICATION MAY BE REPRODUCED WITHOUT WRITTEN PERMISSION.

## OWNER'S MANUAL

© HONDA MOTOR CO., LTD. 1982

# FOR SAFE OPERATION

**WARNING**

- To prevent fire hazards and to provide adequate ventilation, keep the pump at least 3 ft away from buildings and other equipment during operation.
- Do not place flammable materials, such as gasoline, matches etc., close to the pump while it is running.
- Refuel in a well ventilated area with the engine stopped. Gasoline is flammable and explosive under certain conditions.
- Do not smoke or allow flames or sparks where the pump is refueled or where gasoline is stored.
- Do not overfill the tank. There should be no fuel in the filler neck. Make sure that the filler cap is closed securely.
- If any fuel is spilled, make sure the area is dry before starting the engine.
- Do not operate the pump on grades steeper than 20° in any direction.
- Exhaust gas contains poisonous carbon monoxide. Avoid inhaling exhaust gases. Never run the engine in a closed garage or confined area.




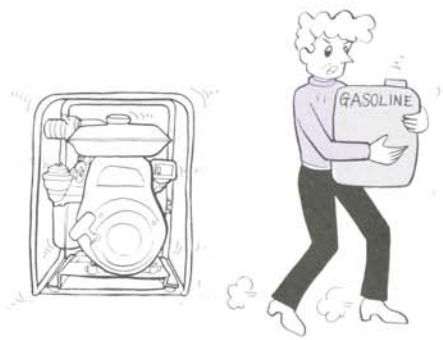






**CAUTION:**

- Never attempt to operate the pump without priming water.
- Drain the water in the pump after use in freezing area.
- Hold the pump securely to prevent tipping over or dragging, when using on a bank or shore.
- Sea water may cause corrosion in the pump.

# PRE-OPERATION CHECKS

**CAUTION:** Gasoline substitutes, such as gasohol etc., are not recommended, they may be harmful to the fuel system components.

Fill fuel tank:
WT20: 3.5ℓ (0.93 US gal)
WT30: 6.0ℓ (1.58 US gal)
★ Use low-lead or unleaded gasoline.

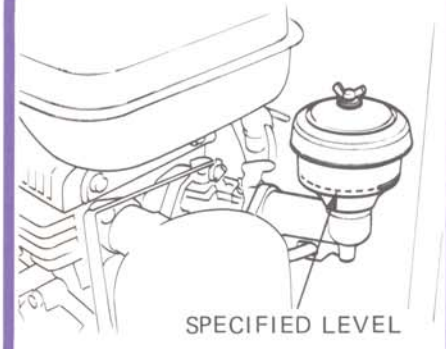


Check oil level. Clean and refill the case if dirty.

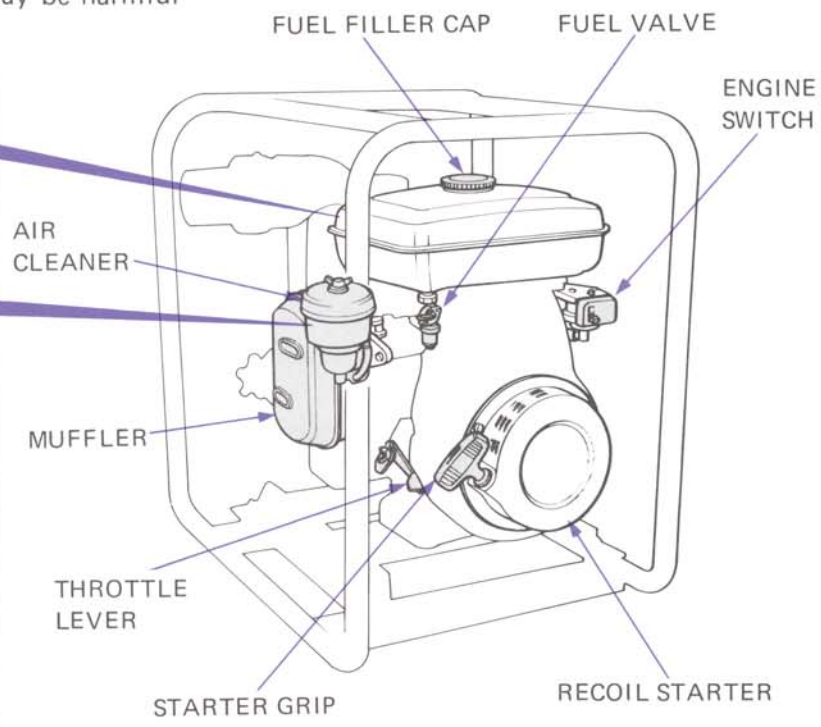


*IMPORTANT*

*Loosen the filler cap and fill the pump with priming water.*

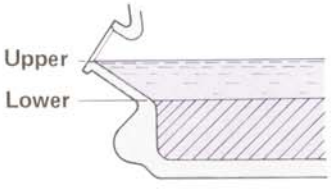


Fill crankcase with SE or SF rated SAE 10W-40 engine oil:
WT20: 0.7ℓ (1.5 US pt)
WT30: 1.2ℓ (2.54 US pt)

NOTE:
★ Fill or check oil with engine on level ground; oil should come to the upper level.

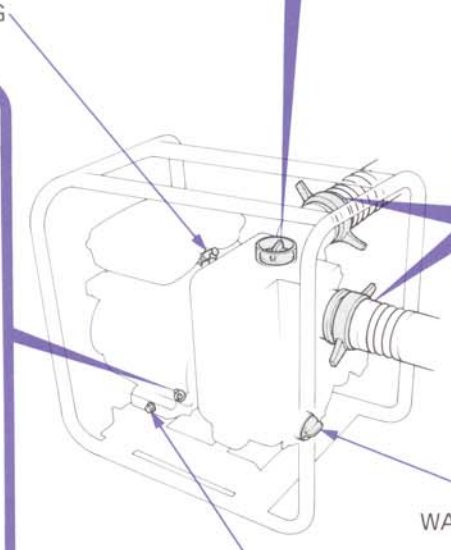


Connect the suction and discharge hoses using hose clamps. Tighten the hose clamps securely.

# STARTING THE ENGINE

## STARTING

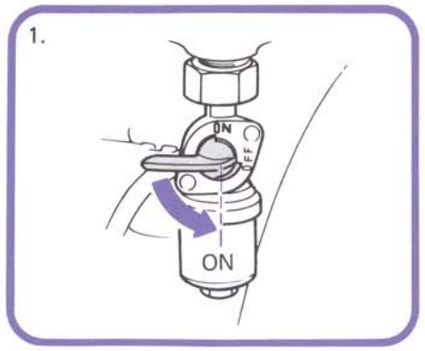


Turn the fuel valve ON.

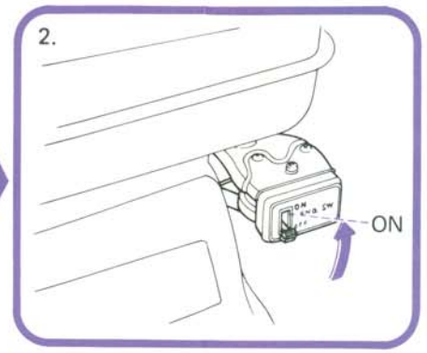


Turn the engine switch ON.

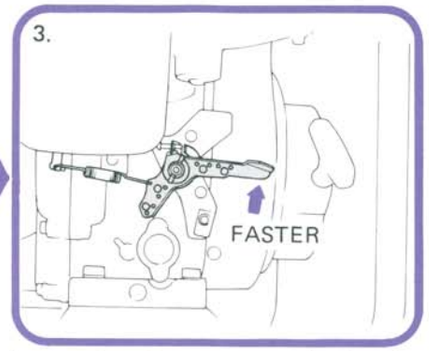


Loosen the wing nut, move the throttle lever up slightly and re-tighten the wing nut.

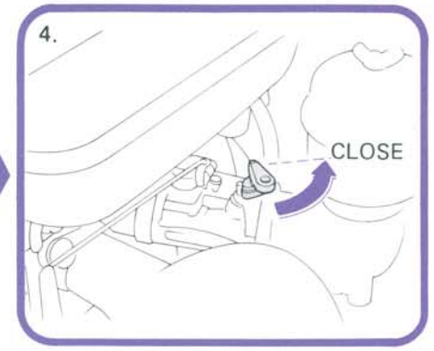


Close choke lever.
NOTE: Do not use CHOKE if the engine is warm or in warm weather.

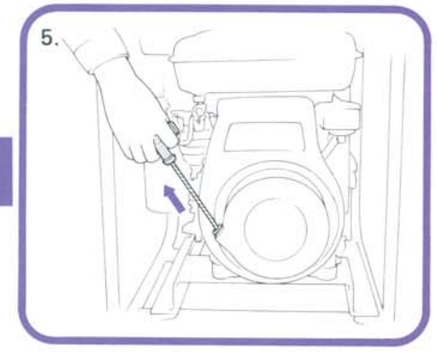


Pull the recoil starter briskly.
NOTE: Allow it to return slowly.

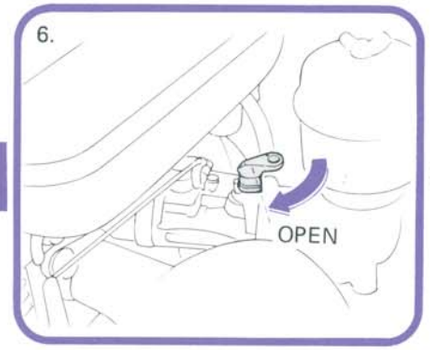


As the engine warms up, gradually open the choke.

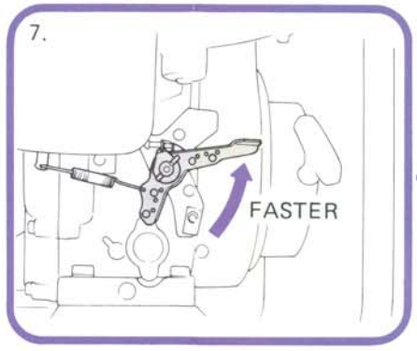


Loosen the throttle wing nut, set the throttle lever for the desired engine speed and retighten the wing nut.




## EXTENDED STORAGE

★ Flush the pump out by pumping clean water through it before shutting down. After flushing, drain the water.

★ Drain gasoline from the fuel tank and carburetor. Change engine oil.

★ Pull the starter rope until resistance is felt, leaving the engine on its compression stroke.

★ Store on a level surface in a dry, dust-free area.

## STOPPING

NOTE:

- If the pump is to be stored for a few days, run the engine with the fuel valve OFF until it stops; this removes fuel from the carburetor.
- To stop the engine in an emergency, turn the engine switch OFF.

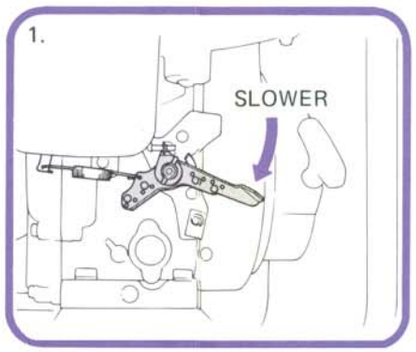


Loosen the wing nut and fully lower the throttle lever.

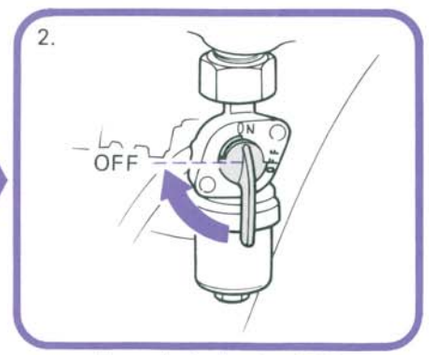


Turn the fuel valve OFF.

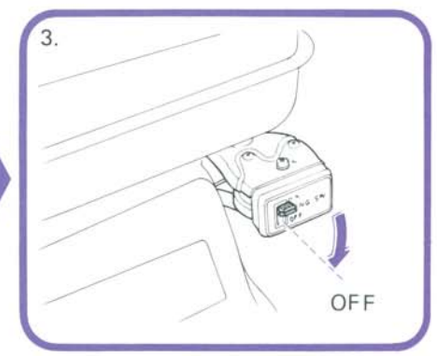


Turn the engine switch OFF.

# PERIODIC MAINTENANCE

## AFTER FIRST 20 HOURS

### CHANGE ENGINE OIL

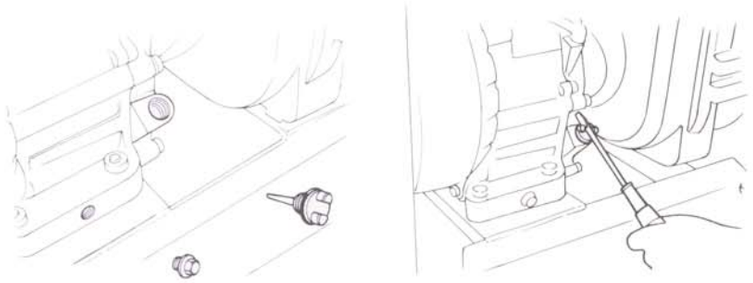

★ Use a screwdriver shaft to loosen or tighten oil filler cap.

## EVERY 50 HOURS

### CLEAN AIR CLEANER ELEMENT

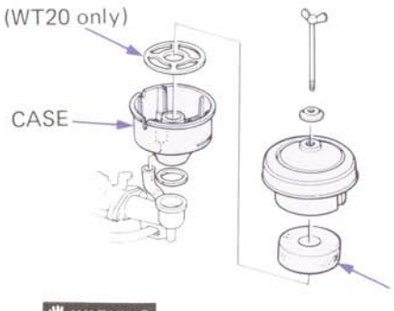


★ Wash the case, grid (WT20 only) and element in high flash point cleaning solvent. After drying, fill with engine oil up to the specified level.

★ Clean more frequently if pump is operated in a dusty area.

**WARNING**

★ Never use gasoline or low flash point solvents for cleaning the air cleaner element. A fire or explosion could result.

## EVERY 100 HOURS

### CHANGE ENGINE OIL
### CLEAN FUEL FILTER

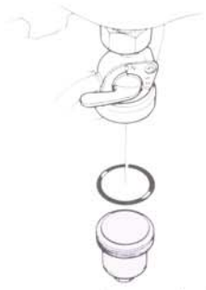

★ Wash removed parts in high flash point solvent, dry them thoroughly and install securely. Turn the fuel valve ON and check for leaks.

### CLEAN SPARK PLUG AND CHECK GAP

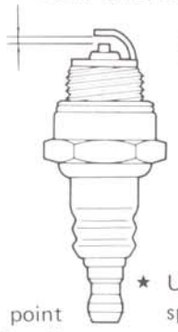

0.6–0.7 mm
(0.024–0.027 in)

★ Use NGK BR4HS spark plug.

### CHECK FUEL HOSE

★ Check fuel hose for cracks or leaks every 300 hours. Replace, if necessary.

# TROUBLESHOOTING

A. When the engine will not start:

A–1. Is the engine switch turned on?

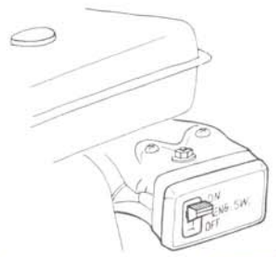


A–2. Is there enough fuel?

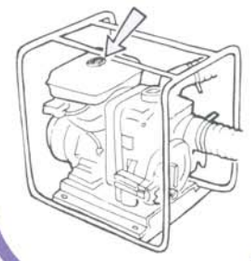

A–3. Is the fuel valve turned on?



A–4. Is there a spark at the spark plug?

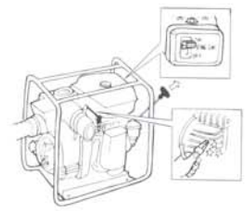

Pull the starter while touching the spark plug against the engine. If a spark in visible, reinstall the spark plug and try to start the engine. If there is no spark, clean or replace the spark plug.

A–5. Take the pump to your dealer.
B–6.

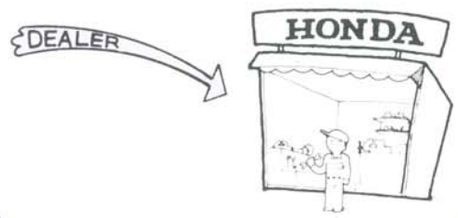


B. When the pump cannot pump the water:

B–1. Is the pump fully primed?

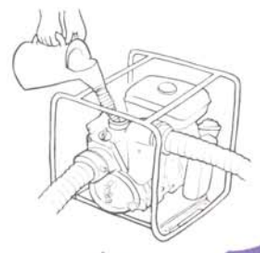

B–2. Is the strainer clogged?

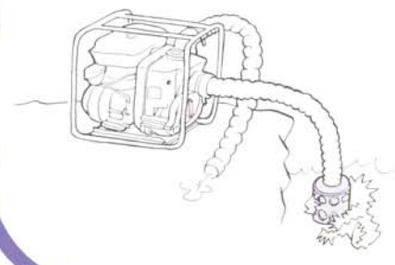

B–3. Are the hose clamps tightened? Are the packing damaged?

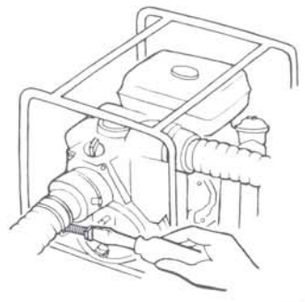

B–4. Are the hoses damaged?

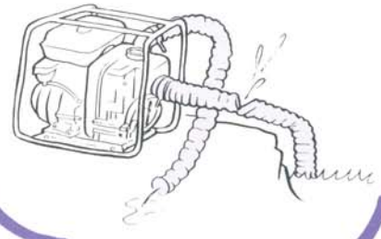

B–5. Is the suction head too high?

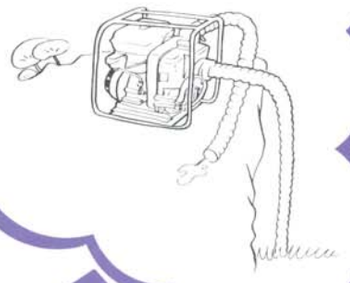

# SPECIFICATIONS

| Model | WT20 | WT30 |
|---|---|---|
| Length x Width x Height | 675 x 480 x 605 mm (26.6 x 18.9 x 23.8 in) | 690 x 485 x 655 mm (27.2 x 19.1 x 25.8 in) |
| Dry weight | 55 kg (121 lbs) | 62 kg (137 lbs) |
| Engine type | 4 cycle, side valve, 1 cylinder, forced air cooled | |
| Displacement | 197 cc (12.0 cu in) | 272 cc (16.6 cu in) |
| Ignition system | Flywheel magneto | Flywheel magneto |
| Suction port diameter | 50 mm (2 in) | 80 mm (3 in) |
| Discharge port diameter | 50 mm (2 in) | 80 mm (3 in) |
| Total head | 26 m (90 ft) | 30 m (100 ft) |
| Suction head | 7 m (23 ft) | 7 m (23 ft) |
| Capacity | 650ℓ (170 US gal) | 1,230ℓ (320 US gal) |

# MECHANICAL SEAL REPLACEMENT

1. Loosen the clamp handle knobs, pivot the clamp handles out as shown, then pull the pump cover out of the pump housing.
2. Pull the pump casing back, rotate it counterclockwise about 30°, and remove it from the housing.
3. Remove the impeller by turning it counterclockwise and remove the shims. Note the number of shims.
4. Replace the mechanical seal.
   Install the removed parts in the reverse order of removal.

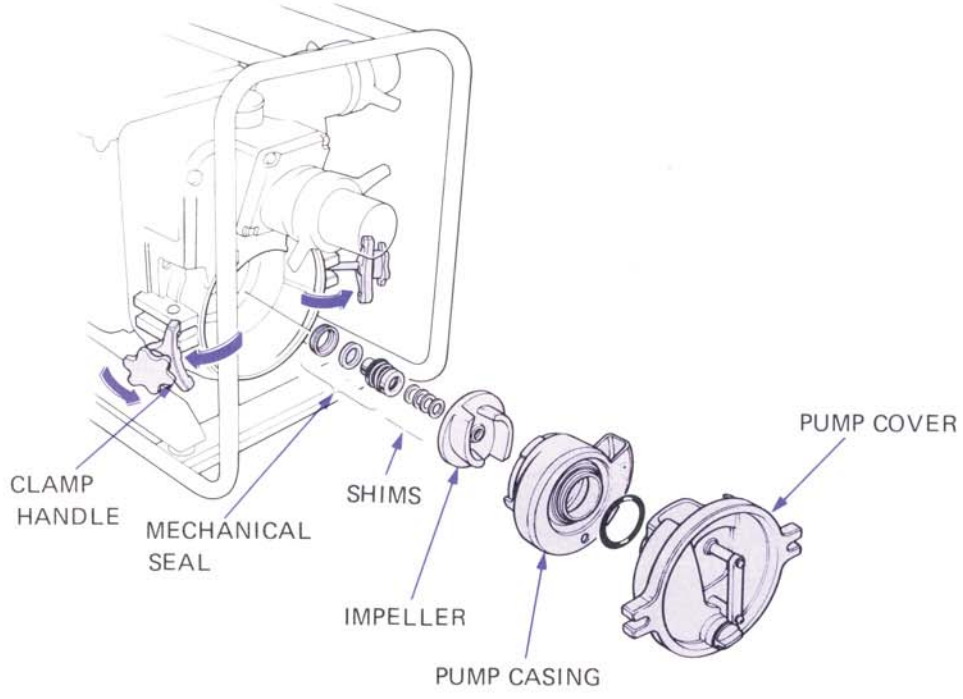


(AH)
31YB100

HONDA
HONDA MOTOR CO., LTD. TOKYO, JAPAN

(英) (Y) A20008202
PRINTED IN JAPAN

# Current customer service contact information:

## United States, Puerto Rico, and U.S. Virgin Islands:

Honda Power Equipment dealership personnel are trained professionals. They should be able to answer any question you may have. If you encounter a problem that your dealer does not solve to your satisfaction, please discuss it with the dealership's management. The Service Manager or General Manager can help. Almost all problems are solved in this way.

If you are dissatisfied with the decision made by the dealership's management, contact the Honda Power Equipment Customer Relations Office. You can write:

American Honda Motor Co., Inc.
Power Equipment Division
Customer Relations Office
4900 Marconi Drive
Alpharetta, GA 30005-8847

Or telephone: (770) 497-6400 M-F, 8:30 am - 7:00 pm EST

When you write or call, please provide the following information:

- Model and serial numbers
- Name of the dealer who sold the Honda power equipment to you
- Name and address of the dealer who services your equipment
- Date of purchase
- Your name, address, and telephone number
- A detailed description of the problem