USER MANUAL

TURBRO

ELECTRIC FIREPLACE STOVE

MODEL NO.: TS25 SMART

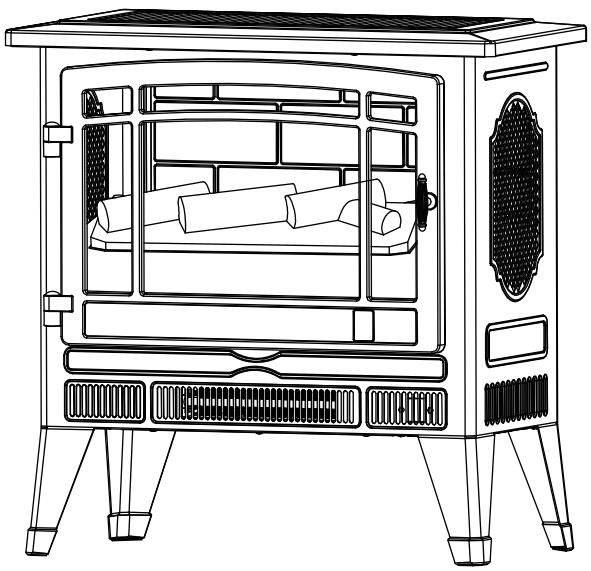

IMPORTANT

READ ALL INSTRUCTIONS BEFORE USING YOUR ELECTRIC FIREPLACE. FAILURE TO FOLLOW INSTRUCTIONS MAY LEAD TO DAMAGE TO THE MACHINE OR PERSONAL INJURY.

KEEP THIS USER MANUAL FOR FUTURE REFERENCE.

Contents

Warranty Registration 01

Safety Instructions 02

Electrical Safety 03

US 3-Pin Polarized Plug 03

Technical Specifications 04

Dimensions 04

Parts List 05

Installation 05

Control Panel 07

- Using the Heater Control 07
- Using the Flame Control 08
- Using the Crackling Sound Function 08
- Using the Timer Function 09
- Using the Remote Control 09

FCC Warning 10

Cleaning & Maintenance 11

Troubleshooting 11

Warranty Information 12

Warranty Registration

Thank you for purchasing a TURBRO Electric Fireplace!
We're extremely happy that you have decided to join us.

To thank you we're giving you a warranty extension. All you need to do is register your new product at **https://www.turbro.com/pages/warranty-registration**. Once it's registered, you'll get a 1-year extension on the 1-year manufacturer warranty for a total of 2 years. It's that easy!

Tip for First-Time Use

When using this fireplace for the first time, or after a long period of storage, let the fireplace run for at least 15 minutes with the thermostat set at the maximum heat level to remove the "new product" smell. This smell is because the fireplace absorbs moisture, creating an odor similar to that of old leather. It will go away after a few minutes of use.

Safety Instructions

Please read the following instructions before attempting to assemble, operate, or install this product.

- Do not use this product with missing, damaged, or broken legs.
- Do not use this product outdoors. This product is for indoor use only.
- This product is not intended for use in bathrooms, laundry areas, and similar indoor locations. Do not place this product where it may fall into a bathtub or other water container.
- If using this appliance on the floor or carpet, please keep the air outlet at least 2-4 inches (50-100 mm) higher from the carpet or floor.
- This product is hot when in use. To avoid burns, do not touch surfaces with bare skin. If necessary, use handles when moving this product. Keep combustible materials such as furniture, pillows, bedding, papers, clothes, and curtains at least 3 ft from the product.
- Do not use this product in an elevated location, such as on a shelf, raised platform, countertop, etc.
- Do not run the power cord of this product under carpeting, throw rugs, runners, or similar items. Arrange the cord away from high-traffic areas so that it will not be tripped over.
- Extreme caution is required when the product is used near children or invalids and whenever the product is left operating unattended.
- Do not operate this product with a damaged power cord or plug, after the appliance malfunctions, or the product is damaged. Any repairs to this appliance should be carried out by a qualified service person.
- Under no circumstances should this product be modified. Parts removed for service must be replaced prior to using this product.
- Connect to properly grounded power outlets only.
- Always plug the fireplace directly into a wall outlet. An extension cord, outlet, or power strip should never be used with this product.
- This product, when installed, must be electrically grounded in accordance with local electrical codes. For the USA: National Electric Code, ANSI/NFPA No. 70. For Canada: CSA C22.1 Canadian Electrical codes.
- To disconnect this product, turn the product off from the control panel, then remove the power plug from the outlet.
- Always unplug this product if you do not plan to use it for a long period of time.
- Do not insert or allow foreign objects to enter any ventilation or exhaust openings as this may cause an electric shock, fire, or damage to the appliance.

Safety Instructions

- To prevent possible fires, do not block air intakes or exhausts in any manner. Do not use on soft surfaces, like a bed, where the opening may be blocked.
- The fireplace has hot, sparking, and arcing parts inside. Do not use it in areas where gasoline, paint, or flammable liquids are used or stored. This appliance should not be used as a drying rack for clothing.
- Use this appliance only as described in this manual. Any other use not recommended by the manufacturer may cause fire, electric shock, or personal injury.

⚠ CAUTION

- **This product can expose you to toxic chemicals including Di (2-ethylhexyl) phthalate (DEHP), which may cause cancer or harm developmental growth.**
- **Wash hands after installation.**

For more information go to www.p65Warnings.ca.gov



Electrical Safety

- A 15-amp, 120-volt, 60 Hz circuit with a properly grounded outlet is required. Preferably, the item will be on a dedicated circuit. Having other appliances on the same circuit may cause the circuit breaker to trip or the fuse to blow while the product is in operation. The product comes with a 6 ft (1.8m) long power cord with a 3-prong plug, which is located on the right side of the appliance.
- Electrical outlet wiring must comply with local building codes and other applicable regulations to reduce the risk of fire, electrical shock, and personal injury.
- Do not use this item if any part of it has been submerged in water. Immediately call a qualified service technician to inspect the item and replace any part of the electrical system which has been underwater.
- This product is equipped with a polarized plug where one prong is wider than the other. For your safety, please insert the plug correctly. If you are unable to insert the plug into the electrical outlet try reversing the plug. If the plug still does not fit, contact a qualified electrician.
- Always plug the unit into a wall outlet. An extension cord, power strip, outlet extender, or any similar products should never be used with this product as it may increase the risk of fire.

US 3-Pin Polarized Plug

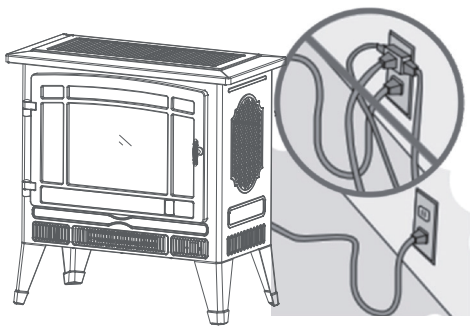

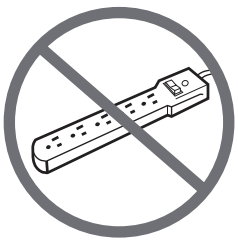

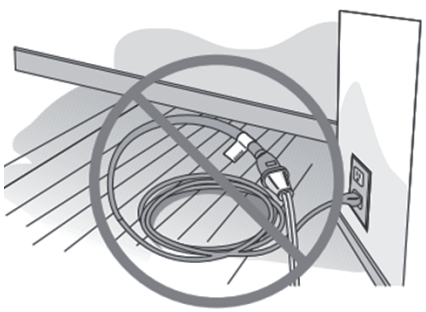

This product is equipped with a 3-pin polarized plug. Connect to properly grounded outlets only. This unit is for use on 120 volts outlets only. For your safety, please always plug the unit into a wall outlet/receptacle. An extension cord or power tap (outlet/power strip) should never be used with this device.

Technical Specifications

Voltage	120V AC
Frequency	60 HZ
Amps	11.7 A
Rating	1400 W
Dimensions (H x W x D)	25 x 24 x 13 inches 63 x 61 x 33.5 cm
Heating Capacity	4780 BTU
Peak Sound Level	37 dB

Dimensions

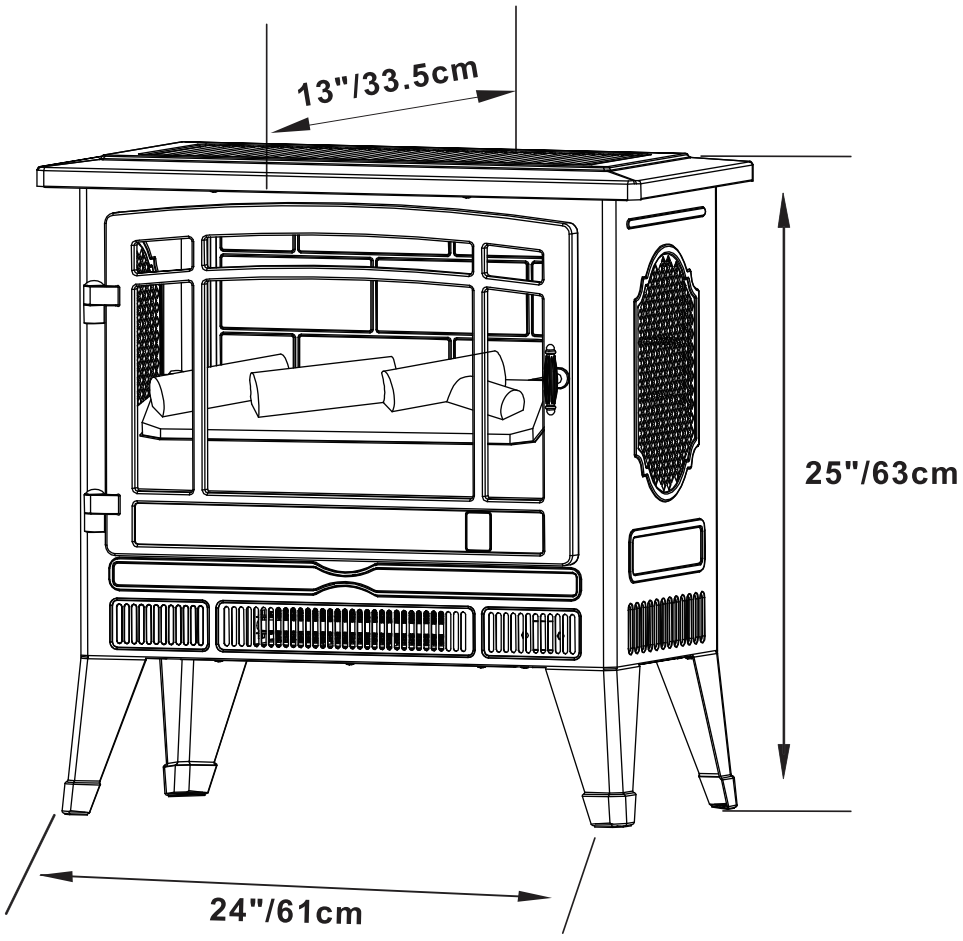

Parts List

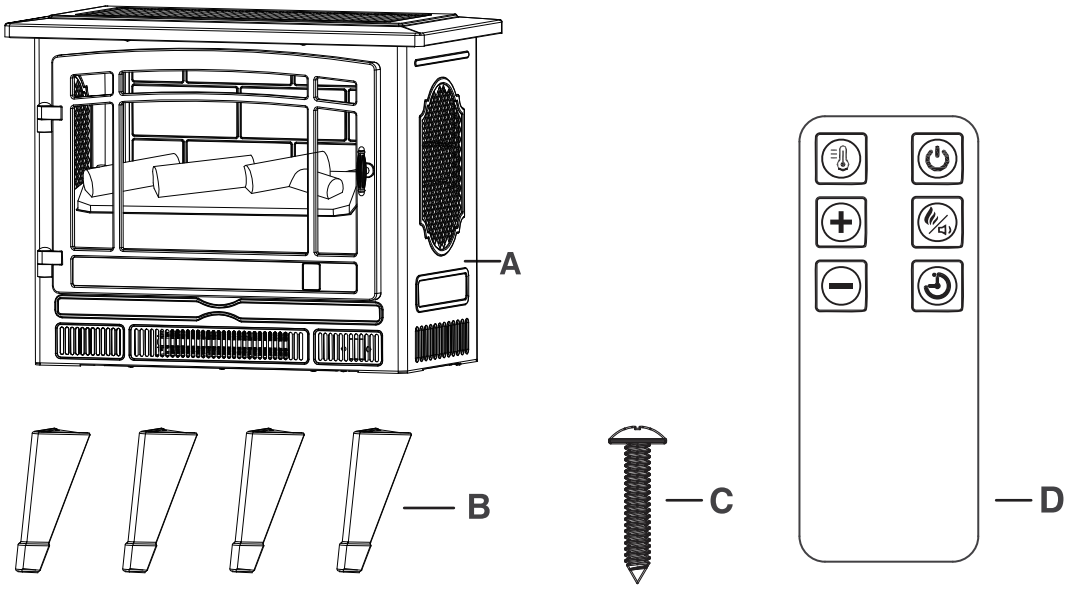

Part	Description	Quantity
A	Electric Fireplace	1
B	Leg	4
C	Phillips-Head Screw	16
D	Remote Control	1

Installation

INSTALLATION WARNINGS

- The fireplace is heavy and should be assembled near its desired location.
- It is recommended that two people move the fully-assembled fireplace to prevent injury.
- Do not install the unit on shelved, raised platforms, beds, blankets, pillows, etc.
- Keep combustible materials such as furniture, bedding, papers, clothes, and curtains at least 3 ft away from the fireplace.
- Make sure that the unit is installed so that the power cord is not compressed against or caught on the fireplace and that it has an unobstructed path to a grounded power outlet.

Installation

BEFORE ASSEMBLY

Open the unit and check carefully for visible damage. If you have any problems with installation, operation, missing parts, or other damage, please contact the TURBRO customer service team. Do not dispose of packaging until you are satisfied with your fireplace. Contact the TURBRO customer service team before returning the unit.
Email: support@turbro.com or Call: (323) 438-3334

INSTALLATION LOCATION

The fireplace should be located in an area that is not in direct sunlight, not susceptible to moisture, and away from any uninsulated exterior walls.

TOOLS REQUIRED



⊕ **Phillips-head screwdriver** (not included)

Tip:
Recommend to use a 6-8 inches screwdriver.
A long screwdriver may help you finish the assembly quickly.

ASSEMBLY INSTRUCTIONS

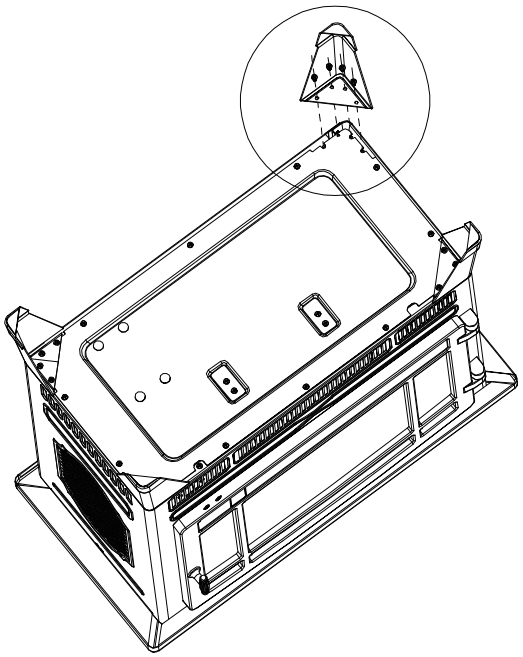

1. Place the fireplace upside down on a padded surface with the underside accessible.
2. Attach the leg to the bottom of the fireplace.
3. Insert screws into the predrilled holes and tighten securely for each leg.
4. Flip over when complete.

Control Panel

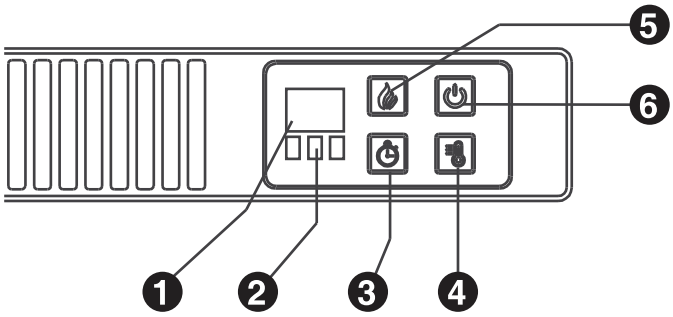

1. **LCD Screen**
2. **Indicators**
3. **Timer**
4. **Heater ON/OFF**
5. **Flame / Sound Control**
6. **Main Power**

- **Press the main power button 6 to turn on the fireplace.**

1. **LCD Screen:** Displays information about the settings you are using.
2. **Indicator Lights:** There are 3 indicator lights below the LCD screen -- red, green, and blue.
   a. Red - Indicates that the LCD screen is displaying the temperature in degrees Fahrenheit.
   b. Green - Indicates that the LCD screen is displaying the temperature in degrees Celsius.
   c. Blue - Indicates that the timer function is in use.
3. **Timer:** Controls the amount of time that the heater and/or flame effect will run before powering off. See section below for more details.
4. **Heater On/Off Control:** Controls how much heat is produced by the fireplace. For safety concerns, this function must be used together with the flame effect. See section below for more details
5. **Flame / Sound Control:** Controls whether the flames and cracking sound effects by the fireplace. Can be used with or without the heating on. See the section below for more details.
6. **Power Switch:** The power switch supplies power to all functions of the fireplace. This switch must be in the ON position for any of the below functions to work.

USING THE HEATER CONTROL

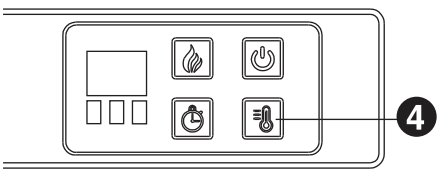

1. Press the heater on/off button 4 to turn on the heating function.
2. When the heater is on, long press the heater button for 5 seconds to enter the temperature setting adjustment. The LCD screen 1 will start flashing.
3. Press the heater button to cycle through the temperature level.
4. After choosing your heat level, wait for the LCD screen 1 to flash 5 times. Your temperature is now set.

Note: The heater will automatically pause after reaching the set temperature in your room. If the heater control is set to "ON" the heater will work nonstop until you shut it off manually.

Control Panel

Button Press	Celsius Temperature
1	22°C
2	23°C
3	24°C
. . .	. . .
6	27°C
7	ON
8	17°C
9	18°C
. . .	. . .
12	21°C

Button Press	Fahrenheit Temperature
1	72°F
2	73°F
3	74°F
. . .	. . .
11	82°F
12	ON
13	62°F
14	63°F
. . .	. . .
22	71°F

To switch from Fahrenheit to Celsius (or vice versa) press and hold the main power button for 5 seconds. The LCD screen will flash 5 times to confirm your settings.

USING THE FLAME CONTROL

Press the flame control button to cycle through the flame brightness levels. The default flame brightness setting is L3 (high) after powering on.

Button Press	Flame Level	Display Value	Fireplace Appearance
1st press	High	L3	Flames Highest, Logs Glow Highest
2nd press	Medium	L2	Flames Medium, Logs Glow Medium
3rd press	Low	L1	Flames Low, Logs Glow Low

USING THE CRACKLING SOUND FUNCTION

Press and hold the flame button for 5 seconds to activate the crackling sound function, the default crackling sound volume is S3 (high), then short press the flame button to switch the crackling sound volume from S1 to S3.
- The current crackling sound mode will be set with no operation in 5 seconds.
- Press and hold the flame button for 5 seconds to turn off the crackling sound.

Crackling Sound Volume	Display Value
High	S3
Medium	S2
Low	S1

NOTE:
- ***When the crackling sound is on, if turn off the flames the crackling sound will turn off automatically. Turn on the flames function again, the sound will back to the previous set volume mode.***
- ***When the flames function is off, the sound function is invalid.***
- ***Every time when the fireplace pulls in the plug and power on again, the sound function is off by default and the volume mode will set back to default mode.***

Control Panel

USING THE TIMER FUNCTION

The timer button is used to control the time of the flame and/or heater function. If the heater and/or flame effect are powered on when you enter the timer adjustment mode, those settings will be under the control of the time you set.

Press the timer button repeatedly to cycle through the timer settings. The blue indicator light will power on once you have confirmed a timer, and the LCD screen will flash 5 times to confirm your timer settings.

Button Press	Timer Interval	Display
1st press	30 Minutes	30
2nd press	1 Hour	1h
3rd press	2 Hours	2h
4th press	3 Hours	3h
5th press	4 Hours	4h
6th press	5 Hours	5h
7th press	6 Hours	6h
8th press	OFF	None

USING THE REMOTE CONTROL

The remote control can be used up to 13 feet (4 meters) away from the heater, so long as there are no obstructions between the remote control and the heater.

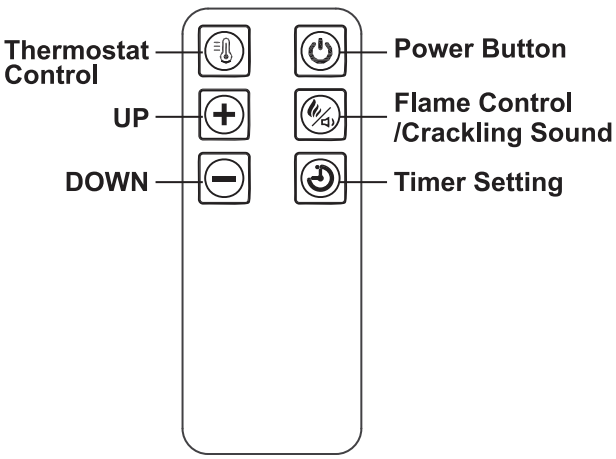

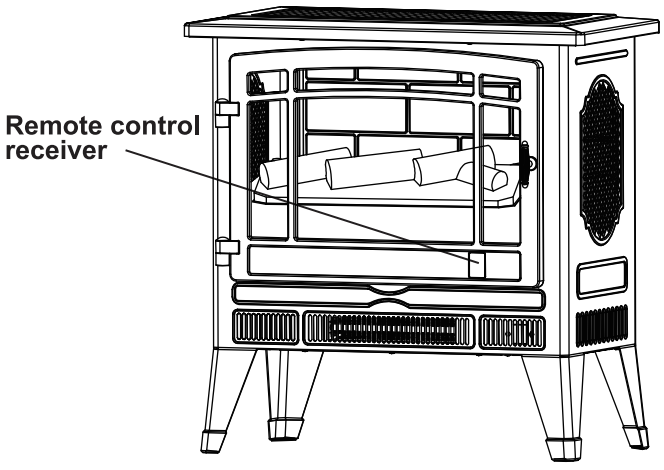

NOTE:

Press and hold the button for 5 seconds to to activate the crackling sound function, then short press the button to switch the crackling sound volume from S1 to S3.

- The current crackling sound mode will be set with no operation in 5 seconds.
- Press and hold the button for 5 seconds to turn off the crackling sound.

REMOTE CONTROL BATTERIES

Press and slide the battery cover on the rear of the remote and remove the cover. Insert two new AAA 1.5V batteries into the battery compartment. Ensure that the polarity is correct. Batteries are not included in the package due to safety concerns during transportation.

Note: Do not mix old and new batteries together in the remote. Do not mix alkaline, standard (carbon-zinc), or rechargeable (NiCad, NiMh, etc.) batteries together

FCC Warning

15.19 Labeling requirements.

This device complies with part 15 of the FCC Rules. Operation is subject to the following two conditions: (1) This device may not cause harmful interference, and (2) this device must accept any interference received, including interference that may cause undesired operation.

15.21 Information to user.

Any Changes or modifications not expressly approved by the party responsible for compliance could void the user's authority to operate the equipment.

15.105 Information to the user.

Note: This equipment has been tested and found to comply with the limits for a Class B digital device, pursuant to part 15 of the FCC Rules. These limits are designed to provide reasonable protection against harmful interference in a residential installation. This equipment generates uses and can radiate radio frequency energy and, if not installed and used in accordance with the instructions, may cause harmful interference to radio communications. However, there is no guarantee that interference will not occur in a particular installation. If this equipment does cause harmful interference to radio or television reception, which can be determined by turning the equipment off and on, the user is encouraged to try to correct the interference by one or more of the following measures:

- Reorient or relocate the receiving antenna.
- Increase the separation between the equipment and receiver.
- Connect the equipment into an outlet on a circuit different from that to which the receiver is connected.
- Consult the dealer or an experienced radio/TV technician for help.

FCC RF Radiation Exposure Statement:

1.This Transmitter must not be co-located or operating in conjunction with any other antenna or transmitter.

2.This equipment complies with RF radiation exposure limits set forth for an uncontrolled environment.

This equipment should be installed and operated with minimum distance 20cm between the radiator and your body.

IC Warning

This device complies with Industry Canada’s licence-exempt RSSs. Operation is subject to the following two conditions:

(1)This device may not cause interference;

(2)This device must accept any interference, including interference that may cause undesired operation of the device.

The information listed above provides the user with information needed to make him or her aware of a RF exposure, and what to do to assure that this radio operates within the FCC exposure limits of this radio.

The device complies with RF specifications when the device used at 20cm from the body.Third-party belt-clips, holsters, and similar accessories used by this device should not contain any metallic components. Body-worn accessories that do not meet these requirements may not comply with RF exposure requirements and should be avoided. Use only the supplied or an approved antenna.

Cleaning & Maintenance

- Always turn the fireplace OFF and unplug the power cord from the outlet before cleaning.
- Use a vacuum or duster to remove dust and dirt from the fireplace and vent areas.
- Clean with a soft, damp cloth and buff with a dry cloth to maintain the luster of this product.
- Never use abrasive cleaners, liquid sprays, or any cleaner that could scratch the surface of the appliance.

Troubleshooting

Problem	Possible Cause(s)	Corrective Action
The fireplace doesn't operate	● The fireplace is not plugged in.	● Make sure the fireplace is plugged into a standard 120V outlet.
	● A circuit breaker is tripped or a fuse is blown.	● Check additional appliances on the circuit. Ideally, the fireplace should be on a dedicated 15-amp circuit.
	● The vents are dirty or clogged.	● Unplug the unit. Clear the vent area of dust and debris. Wait ten minutes, plug the unit in again, and turn on the fireplace.
	● The ON/OFF switch is defective. ● There is loose wiring. ● The fireplace switch is defective. ● The fireplace assembly is defective.	● Contact customer service.
Power light is ON but the flame effect is not visible	● The fireplace is not operating correctly.	● Contact customer service.
Excessive noise when the fireplace is operating	● The fan is defective.	● Contact customer service.
	● The fireplace assembly is defective.	

Warranty Information

TURBRO provides a 1-year limited warranty for TURBRO Heater, from the date of purchase, subject to the following conditions and limitations outlined below.

WHAT IS COVERED?

- This warranty is limited to the repair or replacement of part(s) proved to be defective in material or workmanship, after said defect is confirmed by the manufacturer's inspection.
- The manufacturer may, at its discretion, fully discharge all obligations with respect to this warranty by refunding the wholesale price of the defective part(s).

WHAT IS NOT COVERED?

- Damage caused by the owner when attempting to fix or alter the product themselves.
- Damage caused by misuse, abuse, neglect, alterations, or unauthorized repair.
- Natural depreciation.
- Any alteration misuse of the product will nullify this warranty.
- This warranty is non-transferrable, which is effective for the original buyer from the authorized seller only.

HOW TO REQUEST WARRANTY SERVICES?

- To obtain the benefit of this warranty, please leave a message online (www.turbro.com/contact), or send an email to support@turbro.com.

WHAT WILL TURBRO DO?

- Replace the item.
- Refund the item under certain circumstances.

Customer Support: support@turbro.com or (323) 438-3334

TURBRO

© 2020 Katmai Technology Limited

support@turbro.com

www.turbro.com

PAP 22