LAUNDRY CENTER

Owner's Guide

LAVADORA Y SECADORA SUPERPUESTAS

Manual Del Usuario

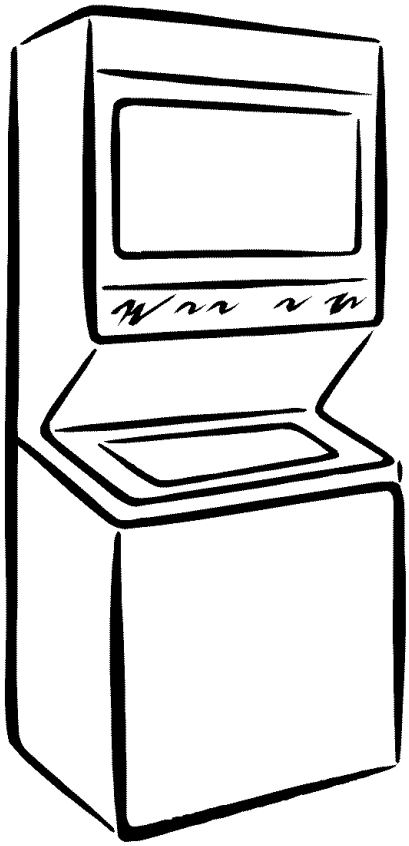

Table of Contents

Important Safety Instructions....2
Washing Procedures....3-4
Stain Removal....5
Common Washing Problems....6
Drying Procedures....7
Features....8
Commom Drying Problems....8
Care and Cleaning....9-10
Avoid Service Checklist....10-12
Warranty and Service....13
Español....14-27
Instrucciones Importantes de Seguridad....14-15
Métodos de Lavado....16-18
Limpieza de Manchas....18-19
Problemas Comunes del Lavado....20
Métodos de Secado....21
Caracteristicas....22
Problemas Comunes de Secado....22
Cuidado y Limpieza....23-24
Lista de Control de Averías....24-26
Garantía....27

Product Registration

Thank you for choosing this dryer. This owner's guide will explain proper operation and care.

Register Your Product

The self-addressed ***PRODUCT REGISTRATION CARD*** should be filled in completely, signed and returned.

Registro del Producto

Le agradecemos que haya seleccionado esta secadora. En este manual del usuario encontrará las intrucciones apropiadas para su funcionamiento y cuidado.

Registre su Producto

La ***TARJETA DE REGISTRO DEL PRODUCTO*** ya dirigida debe ser llenada, firmada y enviada.

Read and Save These Instructions

Record Your Model and Serial Numbers

Record below the model and serial numbers found on the laundry center serial plate located on the inside of the dryer door. Keep these numbers for future reference.

Anote su Número de Modelo y de Serie

Anote a continuación el número de modelo y de serie que se encuentran en la placa de serie situada en el interior de la puerta de la secadora. Conserve estos números para referencia futura.

Model Number:
Número de Modelo: _____

Serial Number:
Número de Serie: _____

Purchase Date:
Fecha de compra: _____

⚠ WARNING For your safety, the information in this manual must be followed to minimize the risk of fire or explosion or to prevent property damage, personal injury or loss of life.

- Do not store or use gasoline or other flammable vapors and liquids in the vicinity of this or any other appliance.
- ***WHAT TO DO IF YOU SMELL GAS:***
  - Do not try to light any appliance.
  - Do not touch any electrical switch; do not use any phone in your building.
  - Clear the room, building or area of all occupants.
  - Immediately call your gas supplier from a neighbor's phone. Follow the gas supplier's instructions.
  - If you cannot reach your gas supplier, call the fire department.

Installation and service must be performed by a qualified installer, service agency or the gas supplier.

This Owner's Guide provides general operating instructions for your laundry center. It also contains information about features for several other models. Your laundry center may not have every feature included. Use the laundry center only as instructed in this Owner's Guide.

⚠ WARNING Do not use or mix liquid chlorine bleach with other household chemicals such as toilet cleaners, rust removers, acid or products containing ammonia. These mixtures can produce dangerous fumes which can cause serious injury or death.

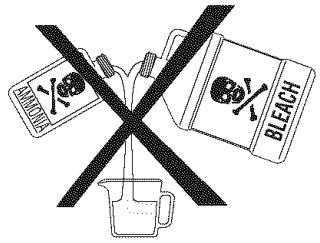

GAS LAUNDRY CENTERS:

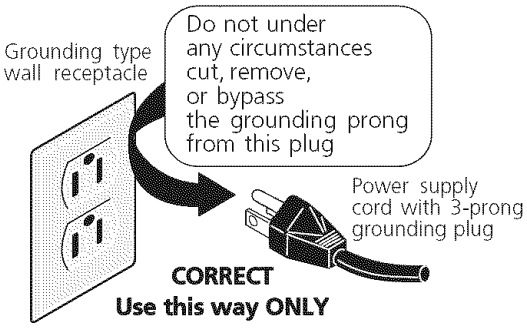

⚠ WARNING Avoid fire hazard or electrical shock. Do not use an adaptor plug or extension cord or remove grounding prong from electrical power cord. Failure to follow this warning can cause serious injury, fire or death.

Note: The instructions appearing in this Owner's Guide are not meant to cover every possible condition and situation that may occur. Common sense and caution must be practiced when installing, operating and maintaining any appliance.

Important Safety Instructions

Read all instructions before using this laundry center.

⚠ WARNING ***You can be killed or seriously injured if you don't follow these Important Safety Instructions:***

- To reduce the risk of fire, electrical shock, or injury to persons when using this laundry center, comply with the basic warnings listed below.
- Failure to comply with these warnings could result in serious personal injuries.

Prevent Fire

- Do not wash or dry items that have been previously cleaned in, soaked in, or spotted with gasoline, cleaning solvents, kerosene, waxes, etc. Do not store these items on or near the dryer. These substances give off vapors that could ignite or explode.
- Do not place items exposed to cooking oils in your dryer. Items contaminated with cooking oils may contribute to a chemical reaction that could cause a load to catch fire.
- Do not put oily or greasy rags or clothing on top of the laundry center. These substances give off vapors that could ignite the materials.
- Do not add gasoline, cleaning solvents, or other flammable or explosive substances to the wash water. These substances give off vapors that could ignite or explode.
- Under certain conditions, hydrogen gas may be produced in a hot water system that has not been used for 2 weeks or more. ***HYDROGEN GAS IS EXPLOSIVE.*** If the hot water system has not been used for such a period, before using the washer, turn on all hot water faucets and let the water flow from each for several minutes. This will release any accumulated hydrogen gas. Hydrogen gas is flammable; do not smoke or use an open flame during this time.
- To prevent fire, do not use heat to dry items containing plastic, foam rubber or similarly textured rubber-like materials, or items containing feathers or down. Use Air Fluff (No Heat) only.
- Clean the dryer lint screen before or after each load. The interior of the dryer, lint screen housing and exhaust duct should be cleaned approximately every 18 months by qualified service personnel. An excessive amount of lint build-up in these areas could result in inefficient drying and possible fire.
  See ***Care and Cleaning***.
- Do not operate the dryer if the lint screen is blocked, damaged or missing. Fire hazard, overheating and damage to fabrics can occur. If your dryer has a drying rack, always replace the lint screen when finished using the drying rack.
- Keep area around the exhaust opening and surrounding areas free from the accumulation of lint, dust and dirt.
- Do not obstruct the flow of ventilating air. Do not stack or place laundry or throw rugs against the front or back of the laundry center.
- Do not spray any type of aerosol into, on or near laundry center at any time.
- Do not use fabric softeners or products to eliminate static unless recommended by the manufacturer of the fabric softener or product.
- Failure to comply with these warnings could result in fire, explosion, serious bodily injury and/or damage to the rubber or plastic parts of the laundry center.

Protect Children

- Do not allow children to play on or in the laundry center. Close supervision of children is necessary when the laundry center is used near children. As children grow, teach them the proper, safe use of all appliances.
- Destroy the carton, plastic bag and other packing materials after the laundry center is unpacked. Children might use them for play. Cartons covered with rugs, bedspreads or plastic sheets can become airtight chambers.
- Keep laundry products out of children's reach. To prevent personal injury, observe all warnings on product labels.
- Before the laundry center is removed from service or discarded, remove the washer lid and dryer door to prevent accidental entrapment.
- Failure to comply with these warnings could result in serious personal injuries.

Prevent Injury

- To prevent shock hazard and assure stability during operation, the laundry center must be installed and electrically grounded by a qualified service person in accordance with local codes. Installation instructions are packed in the laundry center for the installer's reference. Refer to INSTALLATION INSTRUCTIONS for detailed grounding procedures. If the laundry center is moved to a new location, have it checked and reinstalled by a qualified service person.

Printed in U.S.A.

- To prevent personal injury or damage to the laundry center, the electrical power cord of a gas laundry center must be plugged into a properly grounded system. ***Never ground the laundry center to a gas pipe. Do not use an extension cord or an adaptor plug.***
- Follow package directions when using laundry products. Incorrect usage can produce poisonous gas--resulting in serious injury or death.
  - ***Do not*** combine laundry products for use in 1 load unless specified on the label.
  - ***Do not*** mix chlorine bleach with ammonia or acids such as vinegar.

Washing Procedures

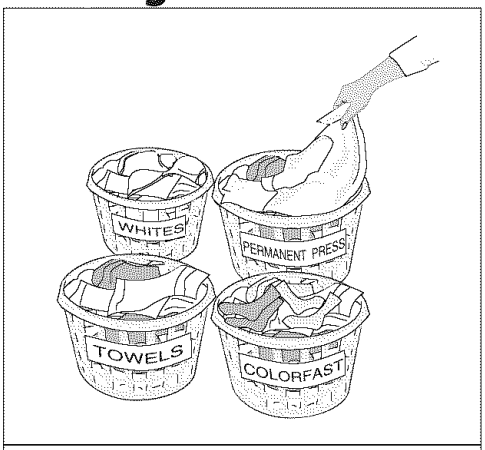

Sort laundry into loads that can be washed together.

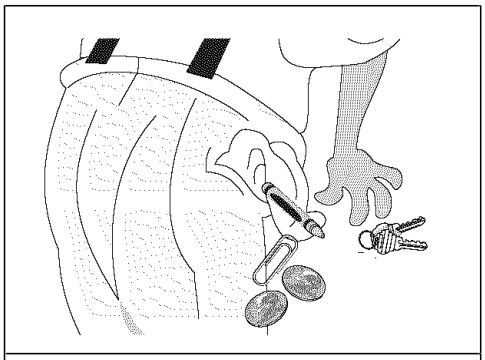

Empty pockets.

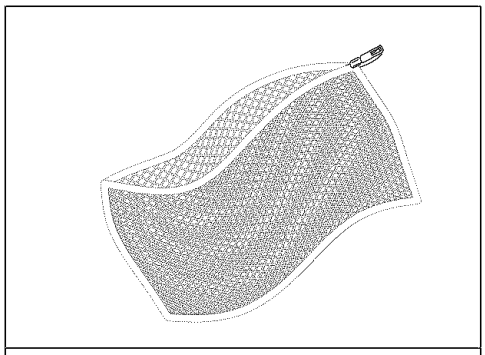

Place delicate items in a mesh bag.

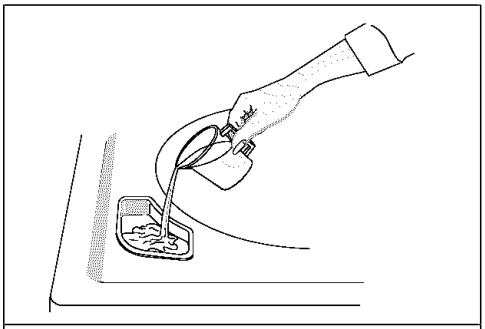

Bleach Dispenser (some models)

- Follow the guidelines below for preparing the wash load.
- Read the ***Washer Operating Instructions*** for operating your specific model.
- ***Always read and follow fabric care and laundry product labels.***

⚠ WARNING To reduce the risk of fire, electrical shock, or injury to persons, read ***Important Safety Instructions***, page 2-3, before operating this washer.

1. *Sort laundry into loads that can be washed together.*

Sort items by recommended water temperatures, wash time, and agitate/spin speeds.

- Separate white, light, and colorfast items from dark and noncolorfast items.
- Separate items which shed lint from items which attract lint. Permanent press, synthetic, knit and corduroy items will pick up lint from towels, rugs and chenille bedspreads.
- Separate heavily soiled items from lightly soiled items.
- Separate lacy, sheer and loosely knit items from sturdy items.

2. *Prepare items for washing.*

- Empty pockets.
- Brush off lint and dirt. Shake out rugs and beach towels.
- Close zippers, fasten hooks, tie strings and sashes, and remove nonwashable trims and ornaments.
- Remove pins, decorative buttons, belt buckles, and other objects which could be damaged. This also helps protect other items in the wash load.
- Mend rips and tears to prevent further damage during washing.
- Place delicate items such as bras, shoulder pads, hosiery, and belts in a mesh bag to prevent tangling during the wash cycle.
- Turn knit items inside out to prevent pilling.

3. *Pretreat stains and heavy soil.*

See ***Stain Removal***, page 5, for details.

4. *Add a measured amount of detergent to the wash tub before adding the laundry load.*

Follow detergent manufacturer's directions. The amount required depends on type of detergent, load size and soil level, and water hardness.

5. *If desired, add liquid bleach to Bleach Dispenser (available on some models).*

- Before adding the wash load, add liquid bleach to bleach dispenser located in left front corner under the lid:
  - 3/4 cup (180 ml) for small loads
  - 1 cup (240 ml) for large loads
  - 1-1/4 cups (300 ml) for extra-large loads.
- Then add 1 cup (240 ml) water to flush the dispenser.
- Do not use powdered bleach in the bleach dispenser. Add powdered bleach to the empty tub.

For models without a bleach dispenser, dilute the recommended amount of liquid chlorine bleach in 1 quart (.95 L) water. Add it to wash water after a few minutes of agitation. ***Do not pour bleach directly on wash load.***

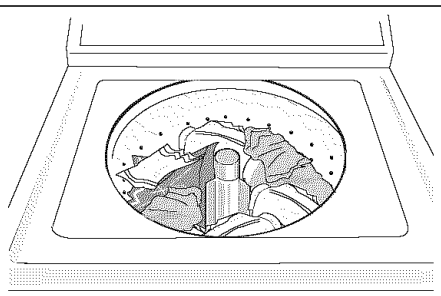

Do not load items higher than top of agitator vanes.

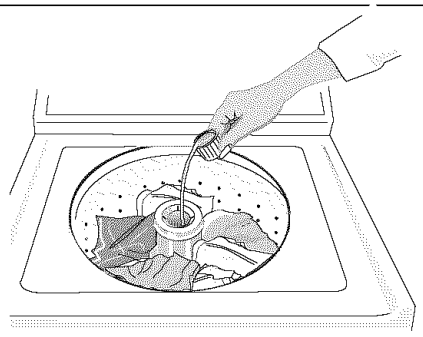

Built-In Fabric Softener Dispenser (some models)

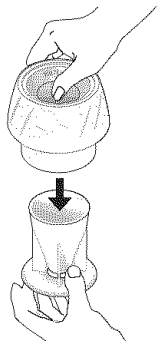

Built-In Fabric Softener Dispenser (some models)

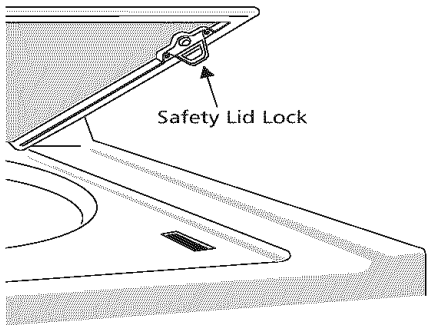

Washing Procedures (continued)

6. Add laundry load to washer.

- Dry load level should not be higher than the top of agitator vanes. ***Do not overload the washer.***
- Do not put items on top of agitator or wrap them around it. Load items evenly.
- Combine large and small items in a load. Load large items first. Large items should not be more than half the total wash load.
- When washing a single heavy item, add 1 or 2 towels to balance the load.

7. If desired, add liquid fabric softener to Fabric Softener Dispenser *(available on some models).*

For models with a built-in dispenser (see picture to the left):

1. Add liquid softener to the dispenser, following fabric softener label directions.
2. Add water to bring liquid level to fill line on dispenser cap.
3. Remove the dispenser from the agitator after each use. Rinse both cap and cup with warm water. Replace dispenser in the agitator.

NOTE: To separate cap from cup, put thumb into dispenser and push against side of cup (see picture to the left). After cleaning, push cap and cup firmly together. Replace dispenser by lining up the ribs and grooves and snapping it into position. If fabric softener builds up in or around the dispenser, clean the area with hot water. ***DO NOT REMOVE SERVICE CAP FOUND INSIDE THE AGITATOR POST.***

For models without a fabric softener dispenser, follow fabric softener label directions. Add diluted fabric softener to the final rinse. ***Do not pour fabric softener directly on the wash load.***

8. Select cycle and settings according to type, size, and soil level of each load .

See ***Operating Instructions*** for your specific model controls.

9. Start the washer.

Close the washer lid and pull out the cycle selector knob. The washer will not agitate or spin with the lid open.

- To stop the washer, push in the cycle selector knob.
- To change a cycle, push in the cycle selector knob. Turn it clockwise to the desired setting. Pull out the knob to restart the washer.

10. Remove items when the cycle is completed.

For your safety, the lid locks when the tub is spinning. It will remain locked for 2-3 minutes after the tub stops spinning.

- To open the lid during a spin, push in the cycle selector knob and wait about 2-3 minutes for the lid lock to release. Do not force open the locked lid.

Place washed items in automatic dryer, line dry, or dry flat as directed by fabric care label. Excess wrinkling, color transfer or odors may develop in items left in the washer after the cycle has ended.

⚠ WARNING To avoid serious personal injury, do not operate washer if safety lid lock is missing or damaged.

Safe Stain Removal Procedures

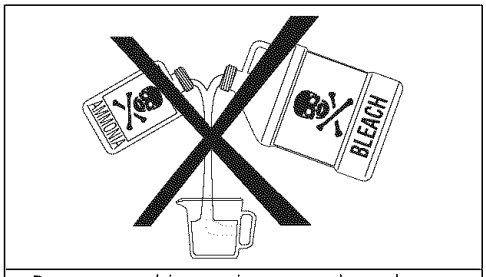

Do not combine stain removal products.

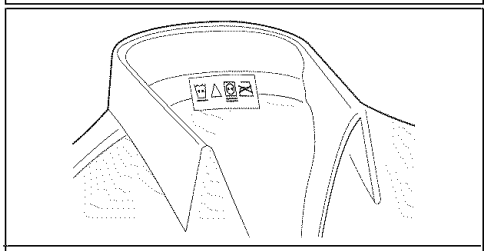

Follow fabric care label instructions.

⚠ WARNING To reduce the risk of fire or serious injury to persons or property, comply with the basic warnings listed below:

- Read and comply with all instructions on stain removal products.
- Keep products in their original labeled containers and out of children's reach.
- Thoroughly wash any utensils used.
- Do not combine stain removal products, especially ammonia and chlorine bleach. Dangerous fumes may result.
- Never wash items which have been previously cleaned in, washed in, soaked in or spotted with gasoline, dry cleaning solvents or other flammable or explosive substances because they give off vapors that could ignite or explode.
- Never use highly flammable solvents, such as gasoline, inside the home. Vapors can explode on contact with flames or sparks.

For successful stain removal:

- Remove stains promptly.
- Determine the kind of stain, then follow recommended treatment in the stain removal chart on the next page.
- To pretreat stains, use a prewash product, liquid detergent, or a paste made from granular detergent and water.
- Use cold water on unknown stains because hot water can set some stains.
- Check label instructions for treatments to avoid on specific fabrics.
- Check for colorfastness by testing stain remover on an inside seam.
- Rinse and wash items after stain removal.

Stain Removal

STAIN	*TREATMENT*
Adhesive tape, chewing gum, rubber cement	Apply ice. Scrape off excess. Place stain face down on paper towels. Saturate with prewash stain remover or nonflammable dry cleaning fluid.
Baby formula, dairy products, egg	Use product containing enzymes to pretreat or soak stains. Soak for 30 minutes or more. Wash.
Beverages (coffee, tea, soda,juice, alcoholic beverages)	Pretreat stain. Wash using cold water and bleach safe for fabric.
Blood	Rinse with cold water. Rub with bar soap. Or, pretreat or soak with product containing enzymes. Wash using bleach safe for fabric.
Candle wax, crayon	Scrape off surface wax. Place stain face down between paper towels. Press with warm iron until wax is absorbed. Replace paper towels frequently. Treat remaining stain with prewash stain remover or nonflammable dry cleaning fluid. Hand wash to remove solvent. Wash using bleach safe for fabric.
Chocolate	Pretreat or soak in warm water using product containing enzymes. Wash using bleach safe for fabric.
Collar or cuff soil, cosmetics	Pretreat with prewash stain remover or rub with bar soap.
Dye transfer on white fabric	Use packaged color remover. Wash using bleach safe for fabric.
Grass	Pretreat or soak in warm water using product containing enzymes. Wash using bleach safe for fabric.
Grease, oil, tar (butter, fats, salad dressing, cooking oils, car grease, motor oils)	Scrape residue from fabric. Pretreat. Wash using hottest water safe for fabric. For heavy stains and tar, apply nonflammable dry cleaning fluid to back of stain. Replace towels under stain frequently. Rinse thoroughly. Wash using hottest water safe for fabric.
Ink	Some inks may be impossible to remove. Washing may set some inks. Use prewash stain remover, denatured alcohol or nonflammable dry cleaning fluid.
Mildew, scorch	Wash with chlorine bleach if safe for fabric. Or, soak in oxygen bleach and hot water before washing. Badly mildewed fabrics may be permanently damaged.
Mud	Brush off dry mud. Pretreat or soak with product containing enzymes.
Mustard, tomato	Pretreat with prewash stain remover. Wash using bleach safe for fabric.
Nail polish	May be impossible to remove. Place stain face down on paper towels. Apply nail polish remover to back of stain. Repeat, replacing paper towels frequently. Do not use on acetate fabrics.
Paint, varnish	WATER BASED: Rinse fabric in cool water while stain is wet. Wash. Once paint is dry, it cannot be removed. OIL BASED AND VARNISH: Use solvent recommended on can label. Rinse thoroughly before washing.
Perspiration	Use prewash stain remover or rub with bar soap. Rinse. Wash using nonchlorine bleach in hottest water safe for fabric.
Rust, brown or yellow discoloration	For spots, use rust remover safe for fabric. For discoloration of an entire load, use phosphate detergent and nonchlorine bleach. ***Do not use chlorine bleach because it may intensify discoloration.***
Shoe polish	LIQUID: Pretreat with a paste of granular detergent and water. PASTE: Scrape residue from fabric. Pretreat with prewash stain remover or nonflammable dry cleaning fluid. Rinse. Rub detergent into dampened area. Wash using bleach safe for fabric.
Urine, vomit, mucus, feces	Pretreat or soak in product containing enzymes. Wash using bleach safe for fabric.

Common Washing Problems

Many washing problems involve poor soil and stain removal, residues of lint and scum, and fabric damage. For satisfactory washing results, follow these suggestions provided by The Soap and Detergent Association.

PROBLEM	POSSIBLE CAUSES	SOLUTIONS	PREVENTIVE MEASURES
Blue stains	•Detergent or liquid fabric softener did not dissolve or disperse.	•If caused by detergent, mix 1 cup (240 ml) white vinegar with 1 quart (.95 L) water in a plastic container. Soak item 1 hour. Rinse. •If caused by fabric softener, rub stains with bar soap. Wash.	•Add detergent before wash load. Then start washer. •Dilute fabric softener with water. •Add fabric softener to dispenser (available on some models).
Discoloration, graying ***Greasy, oily stains***	•Not enough detergent. •Wash water temperature too low. •Incorrect sorting. •Not enough detergent. •Undiluted liquid fabric softener poured directly on fabric.	•Rewash with correct amount of detergent and hottest water safe for fabric. Add bleach safe for fabric. •Treat with prewash stain remover or liquid detergent. •Increase detergent and water temperature. Rewash. •Rub fabric softener stains with bar soap.	•Sort items by soil level and color. •Use correct amount of detergent, hottest water and bleach safe for fabric •Use correct amount of detergent and hottest water safe for fabric. •***Do not pour liquid fabric softener directly on fabric.*** See package directions or ***Washing Procedures*** for proper diluting.
Holes, tears, or snags	•Incorrect use of chlorine bleach. •Unfastened zippers, hooks, buckles. •Rips, tears and broken threads. •Overloading the washer. •Degradation of fabric.	•May be irreversible if rips, tears and seams cannot be mended.	•Never pour chlorine bleach directly on fabric. •Check condition of items before washing. See ***Washing Procedures*** for preparing and loading the wash load.
Lint	•Incorrect sorting. •Tissues left in pocket. •Overloading the washer. •Not enough detergent. •Undissolved detergent has left residue. •Static cling is attracting lint. •Load washed too long	•Reduce load size. Rewash using correct water temperature, water level, and amount of detergent. •Add nonprecipitating water conditioner to wash water. •Add liquid fabric softener to final rinse. •Dry load in dryer. •Remove lint with lint brush or roller.	•See ***Washing Procedures*** for sorting and preparing the wash load. •Do not overload washer. •Use correct cycle, amount of detergent, water temperature and water level.
Pilling (Fibers break off, ball up and cling to fabric)	•Pilling is normal with synthetic and permanent press fabrics. This is due to abrasion from normal wear.	•Use a lint brush or shaver to remove pills.	•Use fabric softener in the washer to lubricate fibers. •When ironing, use spray starch or fabric finish on collars and cuffs. •Turn items inside out to reduce abrasion.
Residue or powder on dark items; Stiff, harsh fabrics.	•Undissolved detergent. •Some granular detergents can combine with hard water minerals to form a residue.	•Reduce load size. •Add dissolved detergent to tub . Rewash load. •Mix 1 cup (240 ml) white vinegar to 1 gallon (3.8 L) warm water in plastic container. Soak item. Rinse and rewash.	•Increase water temperature using hottest water safe for fabric. •Do not overload washer. •Use liquid detergent or use nonprecipitating water conditioner with granular detergent.
Wrinkling	•Overloading the washer.	•Reduce load size. •Rinse in cold water with liquid fabric softener.	•Do not overload washer. •Remove items from washer as soon as cycle is completed. •Use liquid fabric softener.
Yellow buildup of body soil on synthetic fabrics	•Agitation time too short. •Wash water temperature too low. •Not enough detergent.	•Soak in detergent booster or product containing enzymes. •Wash in hot water using full permanent press cycle. •Increase detergent dosage. •Add bleach safe for fabric. •Or, treat with color remover.	•Wash synthetics frequently using water at least 100°F (37°C) and correct water level.
Yellow or brown rust stains	•Iron or manganese in water supply, water pipes, or water heater.	•To restore discolored load of whites, use rust remover safe for fabric. ***Do not use chlorine bleach to remove rust stains. It may intensify discoloration.***	•Use nonprecipitating water softener. •Before washing, run hot water for a few minutes to clear lines. •Drain water heater occasionally. •For an ongoing problem, install an iron filter in your water supply system.

Drying Procedures

- Follow the guidelines below for preparing the load for drying.
- Read the ***Dryer Operating Instructions*** for operating your specific model.
- ***Always read and follow fabric care labels and laundry product labels.***

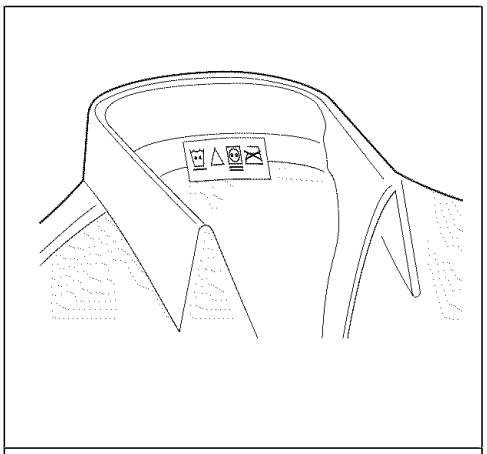

Follow fabric care label instructions.

⚠ WARNING To reduce the risk of fire, electrical shock, or serious injury to persons or property, comply with the basic warnings listed in ***Important Safety Instructions*** and those listed below.

1. *Prepare items for drying.*

- Dry items of similar fabric, weight and construction in the same load.
- Separate dark items from light-colored items. Separate items that shed lint from those that attract lint. If an item sheds lint, turn it inside out.
- Be sure buckles, buttons and trim are heatproof and won't damage the drum finish. Close zippers, fasten hooks and Velcro®-like fasteners. Tie strings and sashes to prevent snagging and tangling.
- If possible, turn pockets inside out for even drying.
- Check for stains which may not have been removed in washing. Dryer heat may permanently set some stains. Repeat stain removal process before drying.
- Place small items in a mesh bag to prevent tangling and for easy removal.

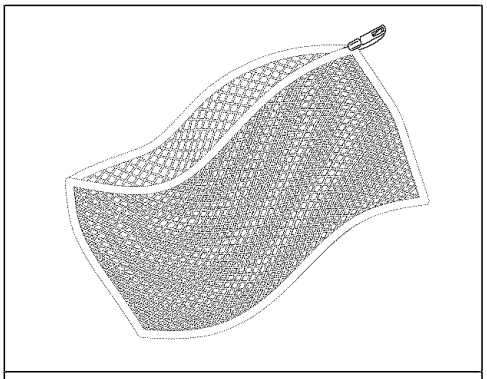

Place small items in a mesh bag.

2. *Check that lint screen is clean and in place.*

3. *Load the dryer.*

- The average load will fill the drum 1/3 to 1/2 full. Items need room to tumble freely for even drying and less wrinkling. ***Do not overload dryer.***
- When drying large items, dry only 2 or 3 at a time. Fill out the load with small and medium sized items.
- For delicate or very small loads, add 2 lint-free towels for better drying, less wrinkling, and to prevent grease stains caused by fabric softener sheets.
- Do not overdry items. Overdrying can cause wrinkling, shrinkage, harshness, and a build-up of static electricity, which can produce more lint.
- If desired, add a dryer fabric softener sheet.

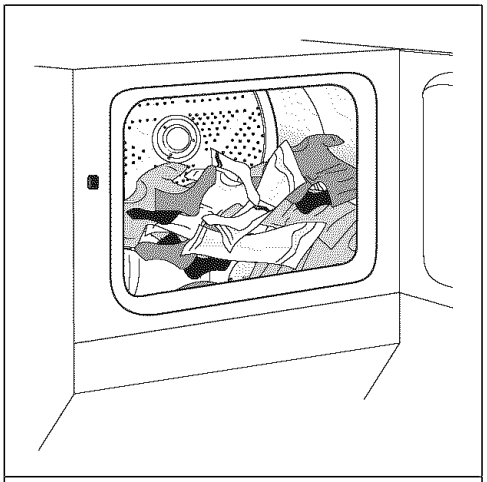

Fill dryer drum 1/3 to 1/2 full.

4. *Close the dryer door and set dryer controls (some models).*

See ***Dryer Operating Instructions*** card for your specific model controls.

5. *Turn cycle selector clockwise to the desired setting.*

6. *Start the dryer.*

- Turn Start control clockwise to ON. Hold for 1-2 seconds and release.
- To add or remove items when the dryer is running, open the door. The dryer will always stop when the door is opened.
- Allow the drum to come to a complete stop before reaching inside.

7. *When the cycle ends, remove items immediately and hang or fold.*

If load is removed before the cycle ends, turn cycle selector to OFF.

Features

Cycle Signal Control (some models)

When the Cycle Signal Control is ON, a signal will sound at the end of each cycle and during the Press Saver setting (some models). The volume is adjustable on some models.

Drum Light (some models)

A drum light will come on whenever the door is opened to illuminate the dryer drum during loading and unloading. Closing the door turns off the light.

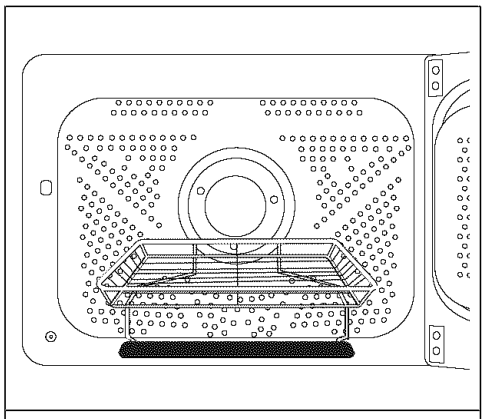

Use the drying rack to dry items which should not be tumbled.

Drying Rack (some models)

Use the drying rack to dry items which should not be tumble dried.

1. Open the dryer door and remove the lint screen.
2. Insert drying rack into the dryer drum. Place the front bar under the lip of the lint screen opening.
3. Place items to be dried on top of rack. Weight should not exceed 10 lbs. Leave space between items, but do not let items hang over the sides or through the grids. Do not tumble other items when using the drying rack.
4. Select a timed dry setting best suited for items being dried. Use only the Air Fluff (no heat) temperature setting for items containing plastic, foam rubber, rubber-like materials, feathers or down.
5. When items are dry, remove the rack and replace the lint screen. If lint screen is not in place, tumbling items could enter the exhaust system and cause damage to the dryer.

Common Drying Problems

Many drying problems involve poor cleaning results, poor soil and stain removal, residues of lint and scum, and fabric damage. For satisfactory drying results, follow these suggestions provided by The Soap and Detergent Association.

PROBLEM	POSSIBLE CAUSES	SOLUTIONS	PREVENTIVE MEASURES
Greasy, oily stains	•Fabric softener sheet.	•Rub fabric softener stains with bar soap. Rinse and rewash.	•Add a few bath towels to small loads for proper tumbling. •Some "silk-like" fabrics should be air dried. •Use proper drying temperature. •Place fabric softener sheet on top of load before starting the dryer.
Lint	• Overloading. • Overdrying causes static electricity. •Lint screen not clean when cycle began. •Lint is attached to "pills."	•Reduce load size and rewash using liquid fabric softener in the final rinse. •Or, add a fabric softener sheet and tumble without heat. •Use lint brush or roller to remove lint.	•Do not overload dryer. •Use fabric softener in washer or dryer to reduce static electricity. •Remove items when they are slightly damp to avoid overdrying. •Check that lint screen is clean and in place.
Pilling (Fibers break off, ball up and cling to fabric.)	•Pilling is normal with synthetic and permanent press fabrics. This is due to abrasion from normal wear.	•Use a lint brush or shaver to remove pills.	•Use fabric softener to lubricate fibers. •When ironing, use spray starch or fabric finish on collars and cuffs. •Turn items inside out to reduce abrasion.
Shrinking	•Overdrying.	•Irreversible condition.	•Follow fabric care label directions. •If shrinking is a concern, check load often. •Remove items while slightly damp. •Block knits into shape. •Lay flat to complete drying.
Wrinkling	•Overloading. •Leaving items in dryer after cycle ends.	•Reduce load size and tumble at medium or low heat for 5-10 minutes. •Remove items immediately. Hang or fold.	•Do not overload dryer. •Remove items as soon as cycle ends.

Care and Cleaning

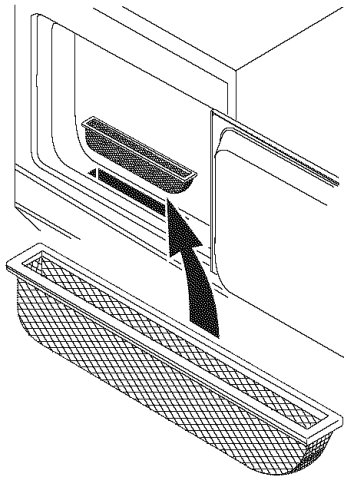

Clean lint screen after every load.

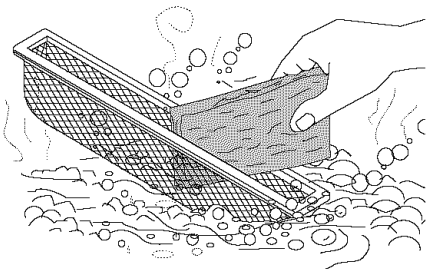

Wash lint screen occasionally.

⚠ CAUTION Use care with laundry products. They can damage finish on the laundry center.

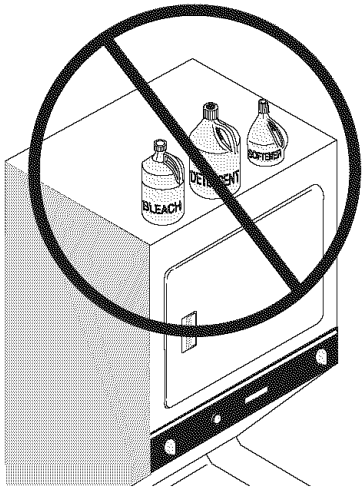

⚠ WARNING To reduce risk of fire or serious injury to persons or property, comply with the basic warnings listed in ***Important Safety Instructions***, page 2, and those listed below.

- Before cleaning the washer or dryer interior, ***unplug the electrical power cord*** to avoid electrical shock hazards.
- Do not use any type spray cleanser when cleaning dryer interior. Hazardous fumes or electrical shock could occur.

Inside the Washer

- Remove items from the washer as soon as the cycle ends. Excess wrinkling, color transfer, and odors may develop in items left in the washer.
- Dry the washer top, the area around the lid opening, and the underside of the lid. These areas should always be dry before the lid is closed.
- Before cleaning the washer interior, ***unplug the electrical power cord*** to avoid electrical shock hazards.
- When extremely soiled items have been washed, a dirty residue may remain on the tub. Remove this by wiping the tub with a nonabrasive household cleanser. Rinse thoroughly with water.
- The agitator or tub may become stained from fabric dye. Clean these parts with a nonabrasive household cleanser. This prevents dye transfer to future loads.

Inside the Dryer

- Clean the dryer lint screen after every load. Lint build-up in the screen restricts air flow, which causes longer drying times. The screen is located at the bottom of the door opening. Remove by pulling straight up. Remove the lint and replace the screen.
- Occasionally a waxy build-up may form on the lint screen from using dryer-added fabric softener sheets. To remove this build-up, wash the lint screen in warm, soapy water. Dry thoroughly and replace. Do not operate the dryer without the lint screen in place.
- If the dryer drum becomes stained from noncolorfast fabrics, clean the drum with a damp cloth and a mild liquid household cleanser. Remove cleanser residue before drying the next load.
- Every 18 months an authorized servicer should clean the dryer cabinet interior and exhaust duct. These areas can collect lint and dust over time. An excessive amount of lint build-up could result in inefficient drying and possible fire hazard.

Outside

- When laundering is completed, wipe cabinet with a damp cloth. Turn water faucets off to prevent pressure build-up in the hoses.
- Clean the cabinet with mild soap and water. ***Never use harsh, gritty or abrasive cleansers.*** If the cabinet becomes stained, clean with diluted chlorine bleach [1/2 cup (120 ml) in 1 quart (.95 L) water]. Rinse several times with clear water.
- Remove glue residue from tape or labels with a mixture of warm water and mild detergent. Or, touch residue with the sticky side of the tape or label.
- ***Before moving the laundry center,*** place a strip of cardboard or thin fiberboard under the front leveling legs to prevent floor damage.

Winterizing Instructions

If the laundry center is stored in an area where freezing can occur or moved in freezing temperatures, follow these winterizing instructions to prevent damage to the laundry center:

1. Turn off water supply faucets.
2. Disconnect hoses from water supply and drain water from hoses.
3. Plug electrical cord into a properly grounded electrical outlet.
4. Add 1 gallon nontoxic recreational vehicle (RV) antifreeze to empty wash tub. Close lid.
5. Set cycle selector knob at a spin setting. Pull out knob and let washer spin for 1 minute to drain out all water. Not all of the RV antifreeze will be expelled.
6. Push in knob, unplug electrical power cord, dry tub interior, and close lid.
7. Store washer in an upright position.
8. To remove antifreeze from washer after storage, run empty washer through a complete cycle using detergent. ***Do not add wash load.***

Avoid Service Checklist

Before calling for service, review this list. It may save both time and expense. The list includes common concerns that are not the result of defective workmanship or materials in this laundry center.

OCCURRENCE	POSSIBLE CAUSE	SOLUTION
WASHER - NOISE		
"Clunking" or gear sounds.	A certain amount of "clunking" or gear sounds are normal in a heavy-duty washer.	This is normal.
Rattling and clanking noise.	Foreign objects such as coins or safety pins may be in tub or pump.	Stop washer and check tub. If noise continues after washer is restarted, objects may be in pump. Call your authorized servicer.
	Belt buckles and metal fasteners are hitting wash tub.	To prevent unnecessary noise and damage to tub, fasten fasteners and turn items inside out.
Squealing sound or hot rubber odor.	Washer is overloaded.	Do not overload washer. Stop washer and reduce load.
Thumping sound.	Heavy wash loads may produce a thumping sound.	This is usually normal. If sound continues, washer is probably out of balance. Stop washer and redistribute wash load.
Vibrating noise.	Laundry center is not resting on a solid, firm floor.	Move laundry center so it rests firmly on solid floor. Additional floor bracing may be needed. Adjust leveling legs. See INSTALLATION INSTRUCTIONS for details.
	Shipping bolt and block have not been removed during installation.	See INSTALLATION INSTRUCTIONS for removing shipping bolt and block.
	Wash load unevenly distributed in tub.	Stop washer and rearrange wash load.
WASHER - OPERATING		
Washer does not start.	Washer lid is open	Close washer lid
	Electrical power cord may not be plugged in or connection may be loose.	Make sure plug fits tightly in wall outlet.
	House fuse blown, circuit breaker tripped, or a power outage has occurred.	Reset circuit breaker or replace fuse. Do not increase fuse capacity. If problem is a circuit overload, have it corrected by a qualified electrician. If problem is a power outage, call local electric company.
	Water supply faucets are not turned on.	Turn on water supply faucets.

OCCURRENCE	POSSIBLE CAUSE	SOLUTION
WASHER-OPERATING (continued)		
Washer does not start (continued).	Cycle selector is not in correct position.	Move indicator clockwise slightly. Pull out knob.
	Motor is overheated.	Washer motor will stop if it becomes overheated. It will automatically restart after a cool down period of up to 30 minutes (if washer has not been manually turned off).
Washer won't spin.	Lid is not completely closed.	Close lid completely. Safety lid lock must not be broken.
Residue left in tub.	Heavily soiled items.	Wipe tub with a nonabrasive household cleanser, then rinse. Shake or brush excess dirt and sand from items before washing.
WASHER-WATER		
Wash load too wet after spin.	Washer is overloaded.	Do not overload washer. See ***Washing Procedures.***
	Load is out of balance.	Rearrange load to allow proper spinning.
	Drain hose is kinked.	Straighten drain hose.
Water does not enter washer or it enters slowly.	Water supply is not adequate in area.	Check another faucet in the house. Wait until water supply and pressure increase.
	Water supply faucets are not completely open.	Fully open hot and cold faucets.
	Water is being used elsewhere in the house.	Water pressure must be at least 30 psi (260 kPa). Avoid running water elsewhere while washer is filling.
	Water inlet hoses are kinked.	Straighten hoses.
Water level does not cover load.	Washer is overloaded.	Do not overload washer. When control is set at highest fill level, dry load level should not be higher than top row of circular holes in wash tub.
Warm or hot water is not hot enough.	Hot water heater is set too low or is a distance from laundry center.	Measure hot water temperature at nearby faucet with candy or meat thermometer. Water temperature should be at least 120°F (49°C). Adjust water heater as necessary.
	Hot water is being used elsewhere in the house.	Avoid using hot water elsewhere before or during washer use. There may not be enough hot water available for proper cleaning. If problem persists, your hot water system may be unable to support more than 1 use at a time.
	To conserve energy, the temperature of the cold and hot wash are regulated.	See Operating Instructions for your washer
Water in washer does not drain or drains slowly.	Drain hose is kinked or clogged.	Clean and straighten the drain hose.
Water leaks.	Loose fill hose connection at faucet or washer.	Check and tighten hose connections. Install rubber sealing washers provided.
	House drain pipes are clogged.	Unclog drain pipes. Contact plumber if necessary.
	Oversudsing.	Use less detergent.
Incorrect wash and rinse temperatures.	Hot and cold water hoses are connected to wrong supply faucets.	Connect hot water hose to hot water faucet and cold water hose to cold water faucet.
Water is entering washer but tub does not fill.	Drain hose standpipe is incorrect height.	Standpipe must be a minimum of 33" (83.82 cm) high to prevent siphoning. See INSTALLATION INSTRUCTIONS.

OCCURRENCE	POSSIBLE CAUSE	SOLUTION
DRYER		
Dryer does not start.	Electrical power cord is not securely plugged in or plug may be loose.	Make sure the plug fits tightly in wall outlet.
	House fuse blown or circuit breaker tripped.	Reset circuit breaker or replace fuse. Make sure electrical line is not overloaded and the dryer is on a separate circuit.
	Thermal limiter tripped.	Call authorized service person for replacement.
Dryer runs but won't heat.	There are 2 house fuses in the dryer circuit. If 1 of the 2 fuses is blown, the drum may turn but the heater will not operate.	Replace fuse.
	Gas supply valve is not open (gas models).	Check to make sure supply valve is open. See INSTALLATION INSTRUCTIONS for procedure.
	Dryer does not have enough air supply to support the burner flame (gas models).	See INSTALLATION INSTRUCTIONS.
	LP gas supply tank is empty or there has been a utility interruption of natural gas (gas models).	Refill or replace tank. Dryer should heat when utility service is restored.
Drying cycle takes too long, outside of the dryer feels too hot or smells hot.	Lint screen is clogged with lint.	Make sure all lint has been removed from the dryer lint screen before starting each cycle.
	Exhaust duct requirements have not been met.	Exhaust duct must be at least 4 inches in diameter and made of rigid or flexible metal. When in place, the duct must have no more than two 90° bends and must not exceed length listed in INSTALLATION INSTRUCTIONS.
	Electric dryer is connected to a 208 volt circuit.	Drying time will be 20% longer than drying on a 240 volt circuit.
	Drying procedures have not been followed.	See ***Drying Procedures*** .
	Outside exhaust hood or exhaust duct may be clogged or restricted.	Clean out any obstruction.
Excessive wrinkling.	High humidity.	Use a dehumidifier near the dryer.
	Dryer is overloaded.	Do not overload. See ***Drying Procedures*** .
	Items left in dryer too long.	Remove items as soon as cycle ends.
	Insufficient sorting of items.	See ***Drying Procedures*** .
	Drying temperature too high.	Follow fabric care label instructions.

Major Appliance Warranty Information

Your appliance is covered by a one year limited warranty. For one year from your original date of purchase, Electrolux will pay all costs for repairing or replacing any parts of this appliance that prove to be defective in materials or workmanship when such appliance is installed, used and maintained in accordance with the provided instructions.

Exclusions

This warranty does not cover the following:

1. Products with original serial numbers that have been removed, altered or cannot be readily determined.
2. Product that has been transferred from its original owner to another party or removed outside the USA or Canada.
3. Rust on the interior or exterior of the unit.
4. Products purchased "as-is" are not covered by this warranty.
5. Food loss due to any refrigerator or freezer failures.
6. Products used in a commercial setting.
7. Service calls which do not involve malfunction or defects in materials or workmanship, or for appliances not in ordinary household use or used other than in accordance with the provided instructions.
8. Service calls to correct the installation of your appliance or to instruct you how to use your appliance.
9. Expenses for making the appliance accessible for servicing, such as removal of trim, cupboards, shelves, etc.,which are not a part of the appliance when it is shipped from the factory.
10. Service calls to repair or replace appliance light bulbs, air filters, water filters, other consumables, or knobs, handles, or other cosmetic parts.
11. Surcharges including, but not limited to, any after hour, weekend, or holiday service calls, tolls, ferry trip charges, or mileage expense for service calls to remote areas, including the state of Alaska.
12. Damages to the finish of appliance or home incurred during installation, including but not limited to floors, cabinets, walls, etc.
13. Damages caused by: services performed by unauthorized service companies; use of parts other than genuine Electrolux parts or parts obtained from persons other than authorized service companies; or external causes such as abuse, misuse, inadequate power supply, accidents, fires, or acts of God.

DISCLAIMER OF IMPLIED WARRANTIES; LIMITATION OF REMEDIES

CUSTOMER'S SOLE AND EXCLUSIVE REMEDY UNDER THIS LIMITED WARRANTY SHALL BE PRODUCT REPAIR OR REPLACEMENT AS PROVIDED HEREIN. CLAIMS BASED ON IMPLIED WARRANTIES, INCLUDING WARRANTIES OF MERCHANTABILITY OR FITNESS FOR A PARTICULAR PURPOSE, ARE LIMITED TO ONE YEAR OR THE SHORTEST PERIOD ALLOWED BY LAW, BUT NOT LESS THAN ONE YEAR. ELECTROLUX SHALL NOT BE LIABLE FOR CONSEQUENTIAL OR INCIDENTAL DAMAGES SUCH AS PROPERTY DAMAGE AND INCIDENTAL EXPENSES RESULTING FROM ANY BREACH OF THIS WRITTEN LIMITED WARRANTY OR ANY IMPLIED WARRANTY. SOME STATES AND PROVINCES DO NOT ALLOW THE EXCLUSION OR LIMITATION OF INCIDENTAL OR CONSEQUENTIAL DAMAGES, OR LIMITATIONS ON THE DURATION OF IMPLIED WARRANTIES, SO THESE LIMITATIONS OR EXCLUSIONS MAY NOT APPLY TO YOU. THIS WRITTEN WARRANTY GIVES YOU SPECIFIC LEGAL RIGHTS. YOU MAY ALSO HAVE OTHER RIGHTS THAT VARY FROM STATE TO STATE.

If You Need Service

Keep your receipt, delivery slip, or some other appropriate payment record to establish the warranty period should service be required. If service is performed, it is in your best interest to obtain and keep all receipts. Service under this warranty must be obtained by contacting Electrolux at the addresses or phone numbers below.

This warranty only applies in the USA and Canada. In the USA, your appliance is warranted by Electrolux Major Appliances North America, a division of Electrolux Home Products, Inc. In Canada, your appliance is warranted by Electrolux Canada Corp. Electrolux authorizes no person to change or add to any obligations under this warranty. Obligations for service and parts under this warranty must be performed by Electrolux or an authorized service company. Product features or specifications as described or illustrated are subject to change without notice.

USA
1.800.944.9044
Electrolux Major Appliances
North America
P.O. Box 212378
Augusta, GA 30907

Electrolux

Canada
1.800.668.4606
Electrolux Canada Corp.
5855 Terry Fox Way
Mississauga, Ontario, Canada
L5V 3E4