Husqvarna® AUTOMOWER®

540/560/580/580L EPOS® — Active Wheel Brushes

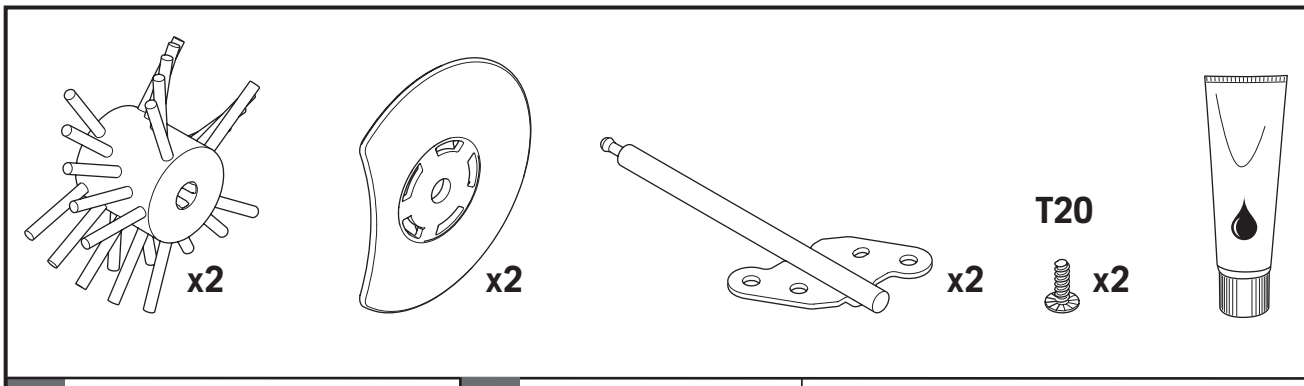

1

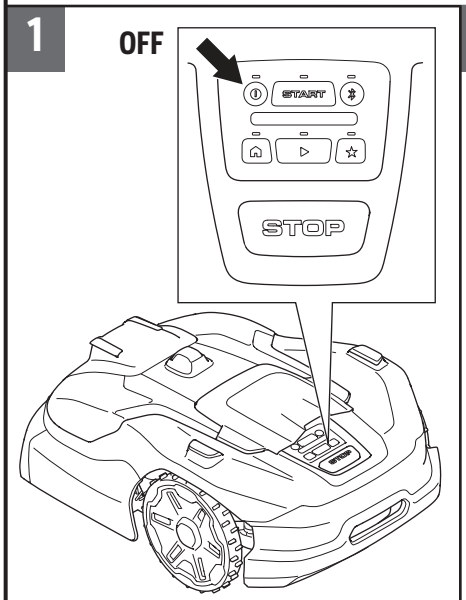

2

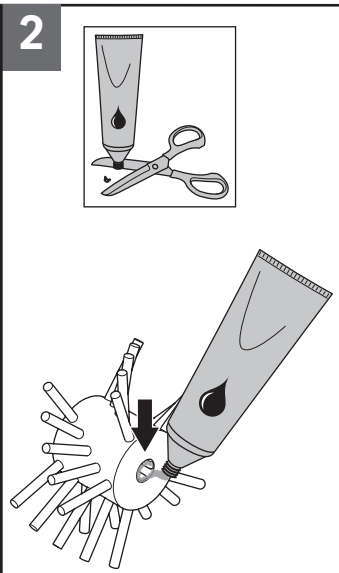

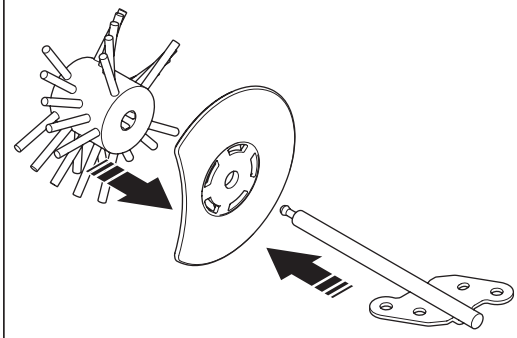

3

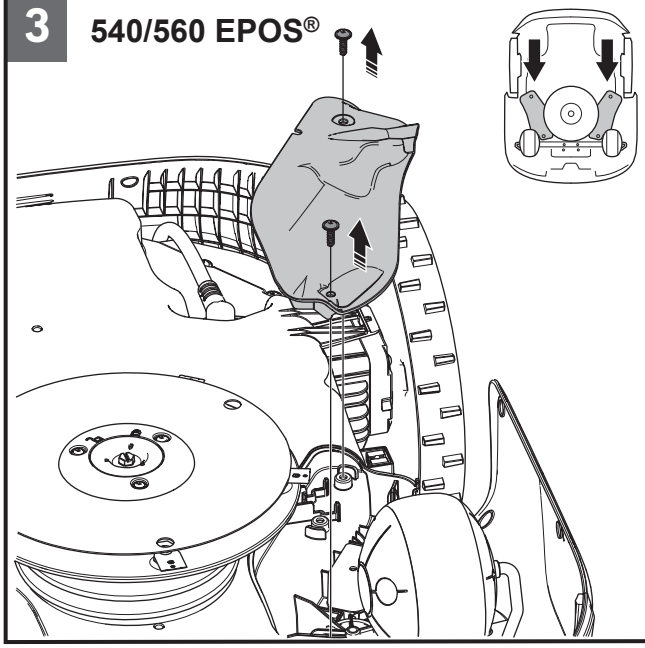

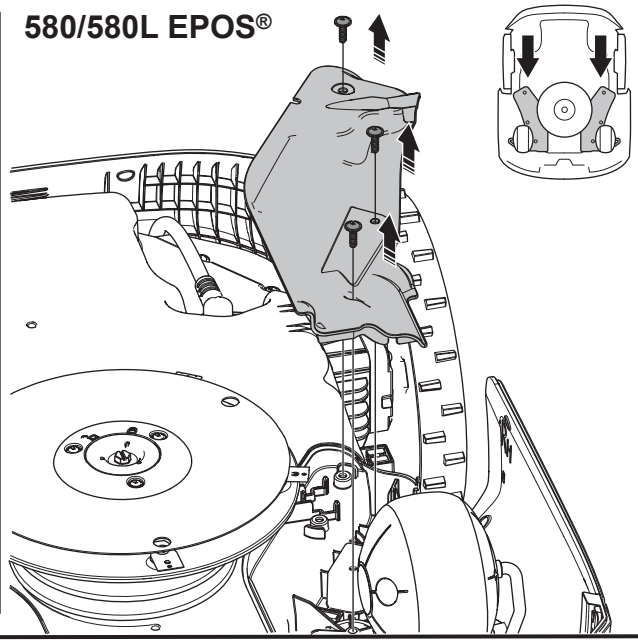

4 540/560 EPOS®

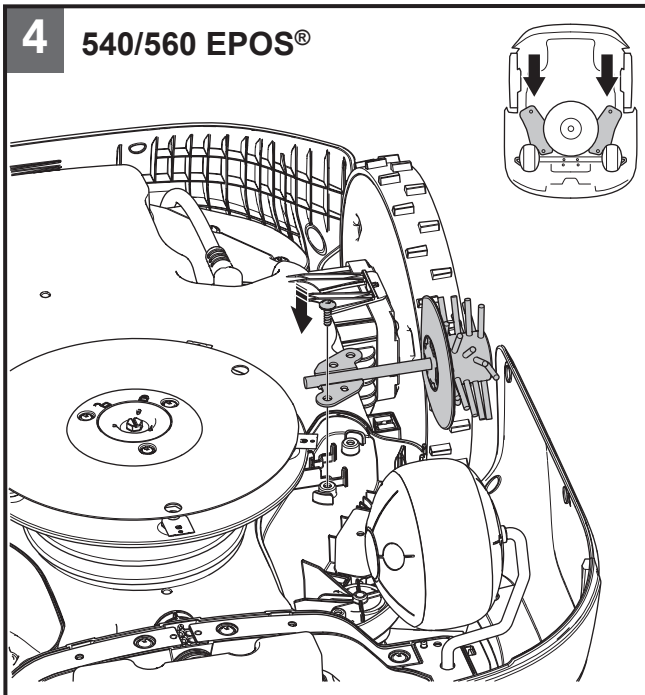

580/580L EPOS®

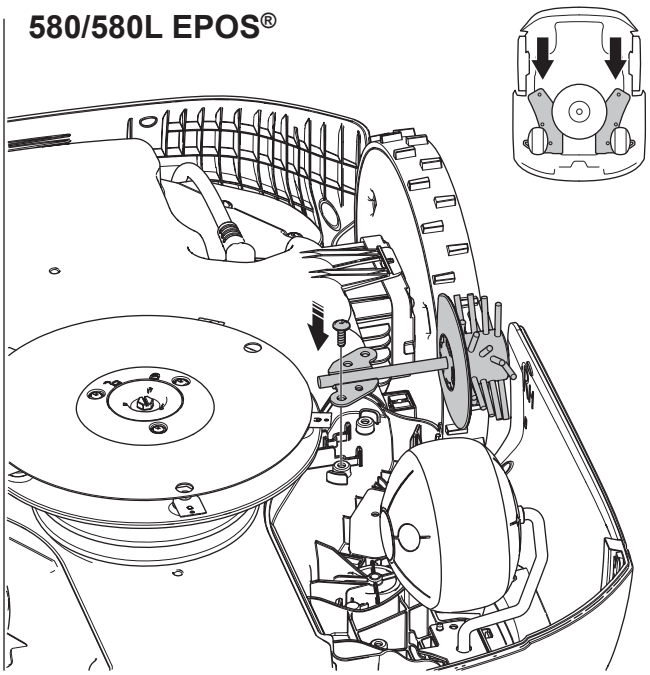

5 540/560 EPOS®

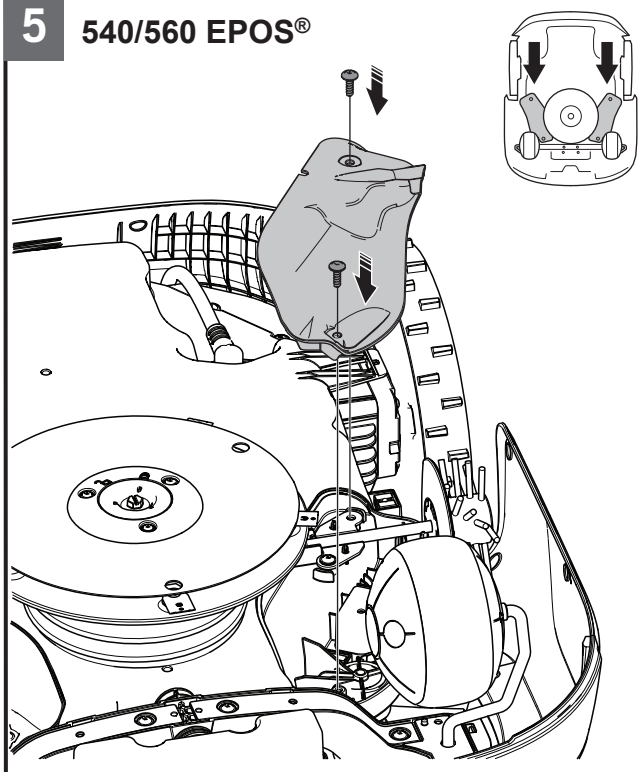

580/580L EPOS®

