Honeywell

24” Stainless Steel Dishwasher User Manual

Read and save these instructions before use

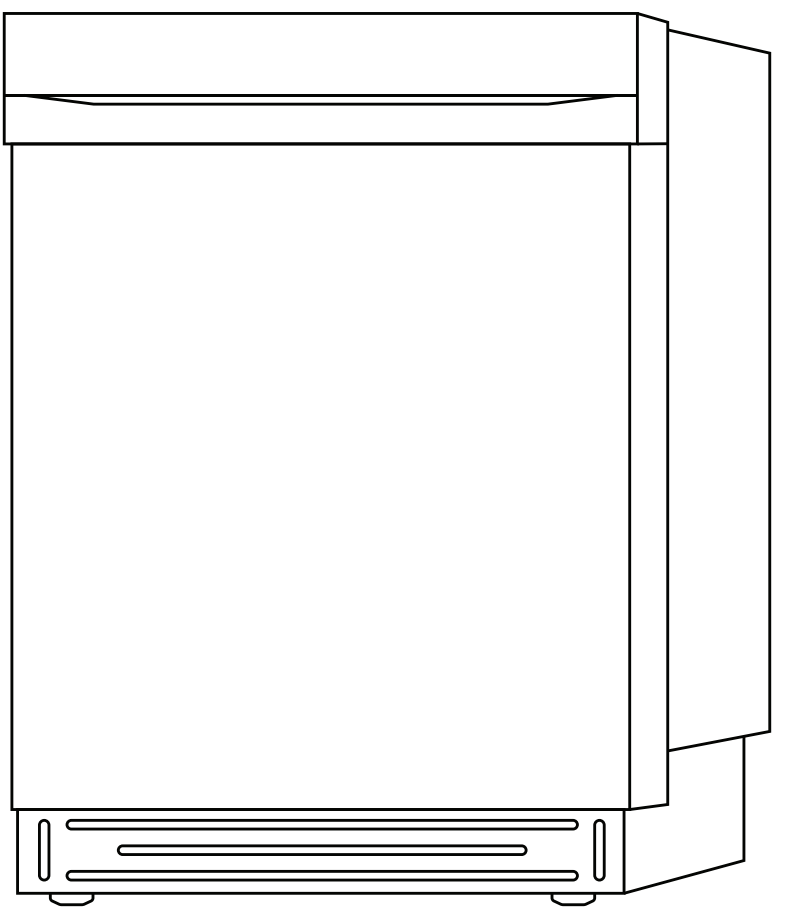

HDS24SS-H

CONTENTS

1 Important Safety Instructions 1-2

2 Installation Introduction

2.1 Introduction 4

2.2 Unpacking And Inspecting The Dishwasher 4

2.3 Removing the kickplate 4

2.4 Installation Instructions 5

2.5 Materials 5-7

2.6 Key Connection Points 8

2.7 Location Requirements 8

2.8 Dimensions 9

2.9 Drain Requirements 10

2.10 Water Supply Requirements 10

2.11 Electrical Requirements 11

2.12 Grounding Instructions 11

2.13 Power Cord Connections 11

2.14 Direct Wire Connections 11

2.15 Checking the door balance 12

2.16 Adjust Leveling Legs 13

2.17 Preparing Installation Opening 14

2.18 Verify Existing Utility Connections 15

2.19 If there are no existing utility connections 15-17

2.20 Connecting the Water Line 17-18

2.21 Slide dishwasher partially into opening 19

2.22 Level Dishwasher 20

2.23 Connnect to power supply 21-25

CONTENTS

2.24 Connect to house drain system 26-30

2.25 Secure Dishwasher 31

3 Operating Requirements

3.1 Location Requirements 32

3.2 Electrical Requirements 32

3.3 Water Supply Requirements 32

3.4 Parts and Features 33

3.5 Filter System 34

3.6 Smart Wash System 34

3.7 Adjustable Upper Rack 34

3.8 Start Up Guide 35

3.9 Cleaning the Filters 36-39

3.10 Cycle and Option Charts 40

3.11 Cleaning the Filters 41

3.12 Upper Rack 42-43

3.13 Lower Rack 44

3.14 Loading Silverware 45-46

4 Dishwasher Use

4.1 Proper Use of Detergent 47-49

4.2 Proper Use of Rinse Aid 50

4.3 Washing Special Items 51-52

5 Dishwasher Care

5.1 Cleaning the Exterior 53-55

6 Storing

6.1 Storing for the Summer 56

7 Checking the Dishwasher

7.1 Pre-Test Checklist 57

CONTENTS

8 Troubleshooting

8.1 Dishwasher not operating properly 58-59

8.2 Dishes are not completely clean 60

8.3 Spots and stains on dishes 61

8.4 Dishes did not completely dry 62

8.5 Dishes are Damaged During Cycle. 62

8.6 Error Codes 62

1 IMPORTANT SAFETY INSTRUCTIONS



WARNING: For your safety, please follow the information in this manual to minimize the risk of fire, explosion, electric shock and to help prevent property damage or personal injury.

WARNING/GROUNDING INSTRUCTIONS

Improper connection of the equipment-grounding conductor can result in a risk of electric shock. Check with a qualified electrician or service representative if you are in doubt whether the appliance is properly grounded. Do not modify the plug if provided with the appliance. If the plug will not fit the outlet, have a proper outlet installed by a qualified electrician.

For a grounded, cord-connected appliance:

This appliance must be grounded. In the event of a malfunction or breakdown, grounding will reduce the risk of electric shock by providing a path of least resistance for electric current. If this appliance is equipped with a cord having an equipment-grounding conductor and a grounding plug, the plug must be plugged into an appropriate outlet that is installed and grounded in accordance with all local codes and ordinances.

For a permanently connected appliance:

This appliance must be connected to a grounded metal, permanent wiring system, or an equipment-grounding conductor must be run with the circuit conductors and connected to the equipment-grounding terminal or lead on the appliance.



WARNING

When using your dishwasher, follow basic precautions, including the following:

- Read all instructions before using the dishwasher. Use the dishwasher only for its intended function. Use only detergents or rinse/wetting agents recommended for use in a dishwasher and keep them out of the reach of children.

When loading items to be washed:

- Locate sharp items so that they are not likely to damage the door seal.
- Load sharp knives with the handles up to reduce the risk of cuttype injuries.
- Do not wash plastic items unless they are marked “Dishwasher Safe” or the equivalent. For plastic items not so marked, check the manufacturer’s recommendations.

- Items that are not dishwasher safe may melt and create a potential fire hazard.
- Do not touch the heating element during or immediately after use.
- Do not operate your dishwasher unless all enclosure panels are properly in place.
- Do not tamper with controls.
- Do not abuse, sit on, or stand on the dishwasher door, or dish racks.
- To reduce the risk of injury, do not allow children to play in or on a dishwasher.
- Under certain conditions, hydrogen gas may be produced in a hot-water system that has not been used for two weeks or more.
- HYDROGEN GAS IS EXPLOSIVE. If the hot-water system has not been used for such a period, before using the dishwasher turn on all hot-water faucets and let the water flow from each for several minutes. This will release any accumulated hydrogen gas. As the gas is flammable, do not smoke or use an open flame during this time.
- Severe product damage and/or injury could result from the use of unqualified service technicians or non-original replacement parts.
- All repairs must be performed by a qualified service technician using only original equipment factory replacement parts.
- Do not store or use combustible materials, gasoline or other flammable vapors and liquids in the vicinity of this or any other appliance.
- Keep young children and infants away from dishwasher when it is operating.
- Do not use the dishwasher if it has a damaged power line or plug, and do not plug the dishwasher into a damaged outlet. Failure to observe these instructions may result in electrical shock.
- This manual does not cover every possible condition or situation that may occur.
- Remove the door to the washing compartment when removing an old dishwasher from service or discarding it.

SAVE THESE INSTRUCTIONS

2 INSTALLATION INTRODUCTIONS



BEFORE YOU BEGIN Read these instructions completely and carefully.

Tip Over Hazard

• Do not use dishwasher until completely installed.

• Do not push down on open door.

• Doing so can result in serious injury or cuts.

State of California Proposition 65 Warnings: Cancer and Reproductive Harm: -www.P65Warnings.ca.gov.

Suffocation Hazard

• Before you throw away your old appliance, remove the door or lid so that children cannot hide or get trapped inside your old appliance.

• Failure to follow these instructions can result in death or brain damage.

CAUTION

• Never use harsh chemicals to clean your dishwasher. Some chloridecontaining products can damage your dishwasher and may present health hazards

• Never use steam cleaning products to clean your dishwasher. The manufacturer will not be responsible for the possible damages or consequences.

• To avoid possible dishwasher damage, do not use harsh chemicals, abrasive cleaners, scouring pads (metal or plastic), or abrasive cloths/paper towels to clean your dishwasher's exterior door panel. Your dishwasher's exterior door panel can be damaged by doing so.

• It is highly recommended that the user become familiar with the procedure to shut off the incoming water supply and the procedure to shut off the incoming power supply. See the Installation Instructions or contact your installer for more information.

• If the dishwasher drains into a food disposer, make sure disposer is completely empty before running dishwasher.

• NSF/ANSI 184 Certified residential dishwashers are not intended for licensed food establishments.

• Protect your dishwasher from the elements. Protect against freezing to avoid possible damage to the fill valve. Damage caused by freezing is not covered by the warranty.

• Not for outdoor use.

2 INSTALLATION INSTRUCTIONS

2.1 Introduction

IMPORTANT:

- This appliance should be installed only by a qualified Installer, plumber or technician and in accordance with the manufacturer's installation instructions, electrical and plumbing national and local codes and ordinances.
- The dishwasher must be installed to allow for future removal from the enclosure if service is required.
- Each dishwasher is tested at the factory and may contain some residual water in the tub as a result of the test.

2.2 Unpacking the Dishwasher

01 With the help of two or more people, open the dishwasher door slowly while one person presses down on the top of the dishwasher. Remove the lower dish rack and all packing material.

02 Locate the literature package, and read the User Manual for operating instructions.

03 Close the dishwasher door until latched, and stand the dishwasher upright.

04 Properly dispose of/recycle all packing material.

2.3 Removing the Kickplate

01 Using a screwdriver, remove the two screws attaching the kick plate(s) to the cabinet.

02 Lift off the kick plate(s).

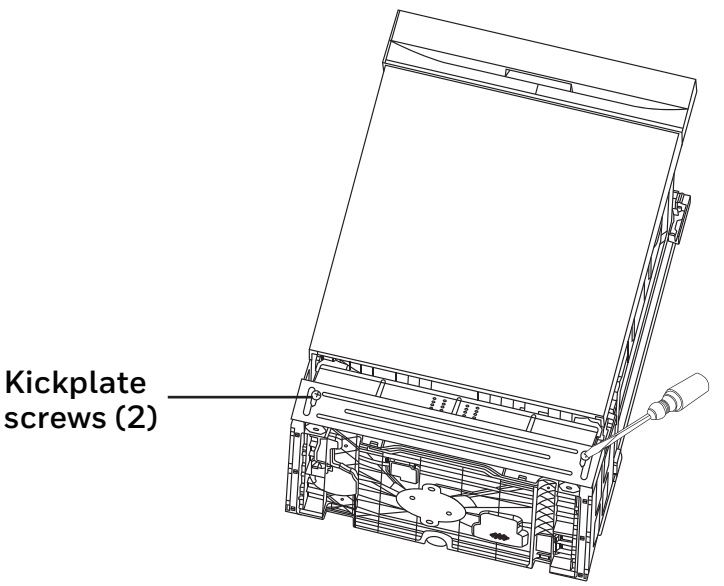

2.4 Installation Instructions

Read the installation instructions clearly , and futher more, pay attention to the following lists:

01 The power-supply receptacle for the appliance shall be installed in a cabinet or on a wall adjacent to the undercounter space in which the appliance is to be installed.

02 There shall be an opening through the partition between the compartments specified in (a) that is large enough for the attachment plug to pass through. The longest dimension of the opening shall not be more than 38 mm (1.5 in).

03 The edges of the opening specified in (b) shall, if the partition is wood, be smooth and rounded, or, if the partition is metal, be covered with an edge protector provided for this purpose by the manufacturer.

04 Care shall be exercised, when the appliance is installed or removed, to reduce the likelihood of damage to the power-supply cord.

A hose that attaches to a sink spray can burst if it is installed on the same water line as the dishwasher. If your sink has one, it is recommended that the hose be disconnected and the hole plugged.

2.5 Materials

Parts Supplied

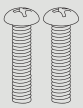	Flat head wood screws to secure dishwasher to underside of countertop	x4
	Adjustment Cap	x2 ea.
	Screw type hose clamp	x1

Materials You Will Need

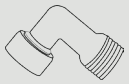	3/4" FHT x 3/8" OD compression 90 Elbow (if not included in in hose kit)	x1
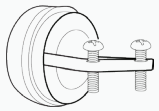	Strain relief for electrical connection	x1

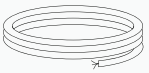	Electrical cable or power cord, if applicable	x1
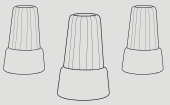	UL listed wire nuts	x3
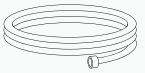	3/8” braided dishwasher supply hose or Copper Tubing Water Line (3/8” min.)	x1

Tools You Will Need

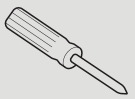	Phillips head screwdriver	x1
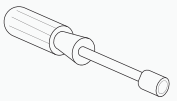	5/16” and 1/4” nutdriver	x1
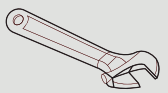	6” adjustable wrench	x1
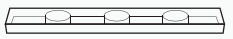	Level	x1
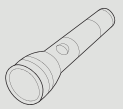	Flashlight	x1
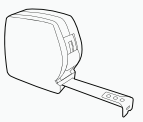	Measuring Tape	x1
	Carpenters square	x1
	Gloves	x1
	Safety glasses	x1
	Flat-Headed Screw Driver	x1

Tools Needed For New Installations Only

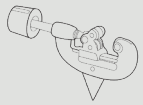	Tubing cutter	x1
	Drill and appropriate bits	x1
	Hole saw set	x1
	Wire Stripper	x1

Materials For New Installations Only

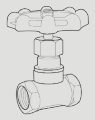	Hand shut-off valve	x1
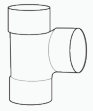	Waste tee for house plumbing, if applicable	x1
	Air gap for drain hose, if required	x1
	Coupler for extending drain line, if applicable	x1

2.6 Key Connection Points

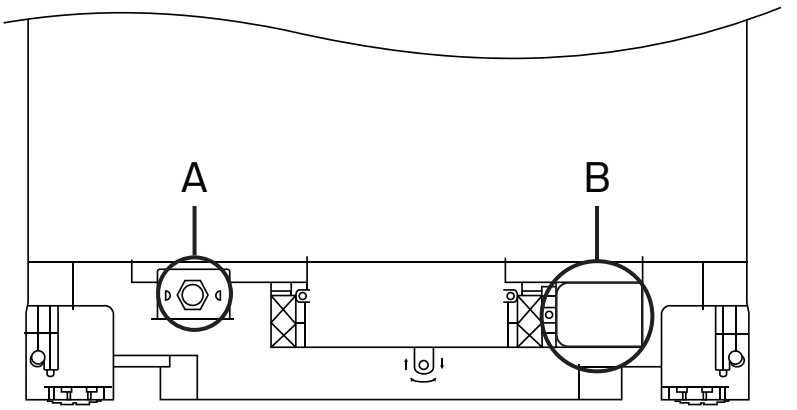

A. Water Connection

B. Electrical Junction Box

2.7 Location Requirements

IMPORTANT:

- Do not run drain lines, water lines or electrical wiring where they can interfere with or contact dishwasher motors or legs.
- The location where the dishwasher will be installed must provide clearance between motors and flooring. Motors should not touch the floor.
- The opening must have a level floor. (If floor at front of opening is not level with floor at rear of opening, shims may be needed to level dishwasher).
- Do not install dishwasher over carpeted flooring.
- The dishwasher must be fully enclosed on the top, sides and back and must not support any part of the enclosure.
- The dishwasher must be installed so that the drain hose is no more than 10 ft in length for proper drainage.

2.8 Dimensions

Opening Dimensions

- The rough cabinet opening must be at least 23.8”(60.5 cm) wide, 22.8‘58cm) deep, and 36.4” (84 cm) high, and provides easy access to water, electricity and a drain.
- When installed in a corner location, a 2” (5.1 cm) minimum clearance is required between the side of the dishwasher and the adjacent wall, cabinet or other appliance.
- There must be a minimum clearance of 27”(68.5cm) in front of the dishwasher to allow the door to fully open.

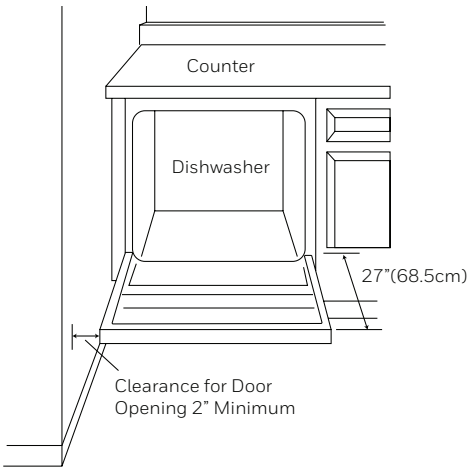

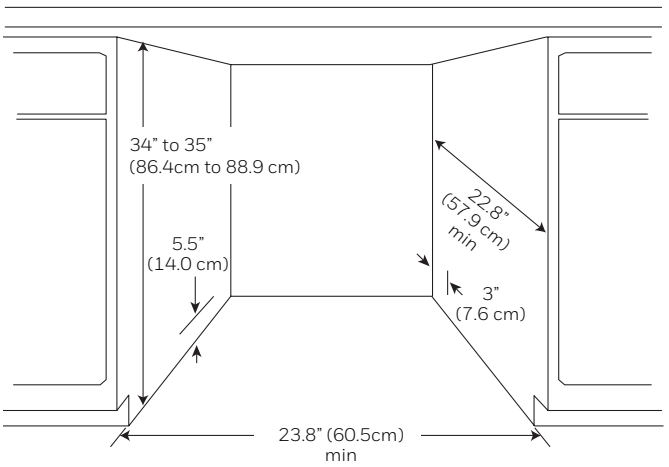

* Make sure water line, wires and drain hose are within the shaded area.

Product Dimensions

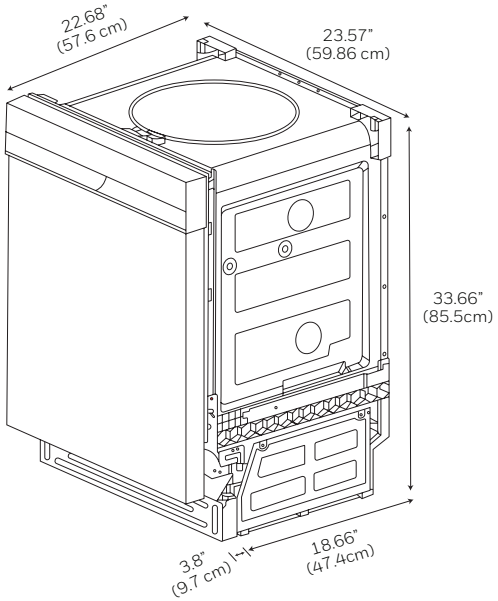

2.9 Drain Requirements

DRAIN HOSE

If the supplied hose is not long enough, use a new drain hose with a maximum length of 6 ft (3.05 m) that meets all current AHAM/IAPMO test standards.

The drain hose should:

- Be resistant to heat and detergent
- Have an inside diameter (I.D.) of 5/8" (1.58 cm) or 3/4" (1.9cm) or 1''(2.54cm)
- Include a coupler to connect the two hose ends (secure the connection with two clamps)

Do NOT connect drain hoses from other appliances to the dishwasher drain hose.

Drain Hose Routing

The drain hose may pass through the same hole as the wiring and hot water line, or you can cut an additional 11/2" (3.8 cm) diameter hole in the cabinet wall to admit the drain hose.

NOTE: The hole must be smooth with no sharp edges.

DRAIN CONNECTION HEIGHT

The drain connection method depends on the height of the drain hose connection.

IMPORTANT: Failure to connect the drain hose at a height of 18" with air gap (not provided) OR to create a drain loop with a minimum height of 32" (81.3 cm) will result in improper draining of the dishwasher.

2.10 Water Supply Requirements

- Water pressure from the hot water supply line must be between 20-120 psi (138-862 kPa).
- Water heater that is adjusted to a water temperature of 120°F to 150°F (49°C to 65.5°C).
- A 3/8" min. diameter copper tubing water line extending at least 24" (61 cm) from the rear wall, and routed to connect to the front left-hand side of the dishwasher.
- A hand shut-off valve in an accessible location, such as under the sink (optional, but strongly recommended).

2.11 Electrical Requirements

WARNING: ELECTRICAL SHOCK HAZARD

- Installation and service must be performed by a qualified installer or service agency.
- Always disconnect the power before servicing this unit.
- This appliance must be properly grounded.
- Failure to do so could result in death, fire, or electrical shock

IMPORTANT:

- The dishwasher must be supplied with 120 volt, 60 Hz., and connected to a dedicated, properly grounded branch circuit, protected by a 15 or 20 ampere circuit breaker or time delay fuse.
- Maximum of two field wiring supply conductors (12 AWG Maximum) plus one grounding conductor are permitted in the terminal box.
- Use Only copper wire.
- Wiring must be 2-wire with ground.
- Use a UL Listed/CSA Approved metallic strain relief.
- Be sure that the electrical connection and wire size are adequate and in conformance with the National Electrical Code, ANSI/NFPA No.
- 70-latest edition and all local codes and ordinances.
- If the electrical supply does not meet the above requirements, call a licensed, qualified electrician before proceeding.

2.12 Grounding Instructions

- The dishwasher must be connected to a grounded metal, permanent wiring system, or an equipment grounding conductor must be run with the circuit conductors and be connected to the equipment grounding terminal or lead on the dishwasher.

2.13 Power Cord Connections

- Use a power cord with connections that comply with the National Electrical Code, Section 422 and/or local codes and ordinances.
- Recommended cord length is 54” min. and 64” max.
- A power cord kit #BK500 is available for purchase from an authorized parts dealer.

2.14 Direct Wire Connections

- Use flexible, armored or nonmetallic sheathed, copper wire with grounding wire that meets the wiring requirements for your local codes and ordinances.

2.15 Checking the Door Balance

- With another person holding the dishwasher to prevent it from tipping, open the door slowly.
- If the door drops too freely, increase the spring tension.
- If the door drops too hard, decrease the spring tension.

To adjust the spring tension:

- Grasping the spring firmly, raise or lower the hook end to the next higher or lower slot, and then insert the hook into the slot.

NOTE: Adjust both springs (left-hand side and right-hand side) to the same tension. Need to Add"Failure to do so could result in door leaks"

- Retest the door. Continue moving the spring hooks higher or lower until the door is balanced.

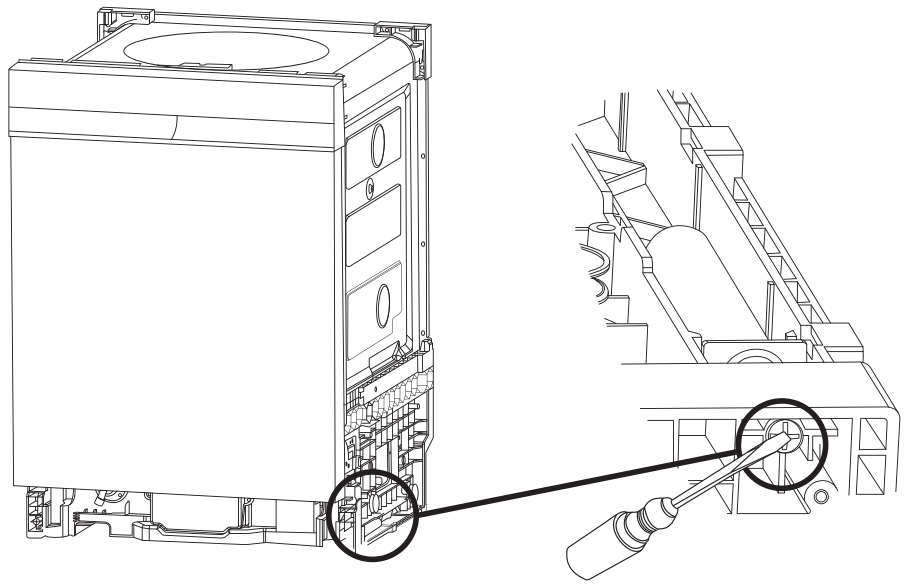

2.16 Adjust Leveling Legs

01 Move the dishwasher close to the installation location and lay it on its back.

02 Measure the height of the opening from the underside of countertop to floor (lowest point).

03 Extend the leveling legs from the base of the dishwasher by the length indicated in the following chart. Take into account any built-up flooring which may need to be added to the rear foot adjustment.

NOTES:

• If the floor was built up in for the front of the dishwasher, account for this difference when adjusting the rear leveling legs.

• Final leveling leg adjustments will be made following installation into the opening.

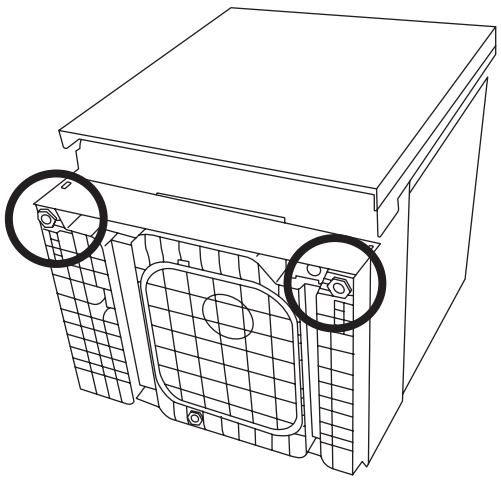

Adjust Leveling Legs
to Installation Height

Leveling Leg Adjustment		
Opening Height	Front Legs	Back Legs
33 ¾”	0”	0”
34”	0”	¼”
34 ¼”	¼”	½”
34 ½”	½”	¾”
34 ¾”	¾”	1”
35”	1”	1¼”

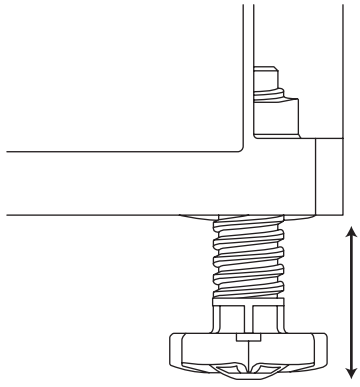

2.17 Preparing Installation Opening (If Needed)

The wiring and plumbing may enter the opening from either the right-hand or left-hand side of the rear wall, the side cabinets, or the floor within the shaded area. See “Location Requirements” for dimensions.

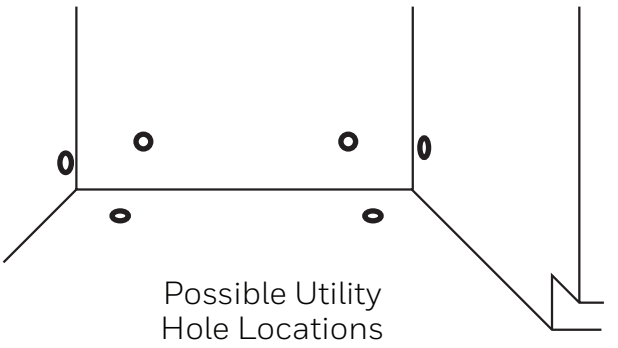

IMPORTANT: Any plumbing or electrical line run outside of the shaded area can become pinched.

The electrical wire/cable, drain hose, and fill hose may enter through the same hole or separate holes in the floor or cabinet. 11/2” (3.8 cm) diameter hole is recommended.

NOTE: Be sure to comply with local plumbing codes.

NOTE: The hole must be free of sharp edges. If the cabinet wall is metal, the edge of the hole must be covered with a bushing/grommet.

2.18 Verify Existing Utility Connections

WATER CONNECTION

Check that the water line reaches to the front, left-hand side of opening where the water connection will be made as shown in the following diagram.

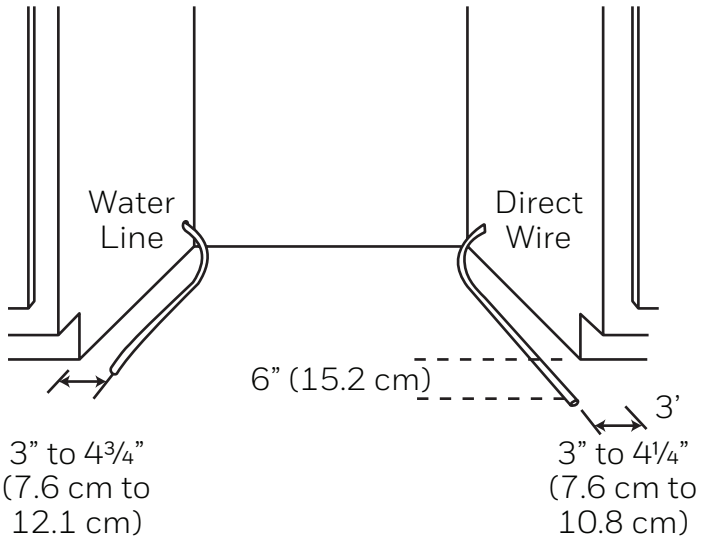

2.18 Verify Existing Utility Connections (cont'd)

ELECTRICAL CONNECTION

Check that the direct wire cable extends a minimum of 6" beyond the front, right-hand side of the opening, and is routed as shown.

If the water line and the direct wire cable reach far enough to easily connect to the dishwasher, proceed to the next section "Install Mounting Brackets."

If the water line and the direct wire cable do NOT reach far enough, follow the instructions under "When There Are No Existing Utility Connections."

2.19 If There Are No Existing Utility Connections

PREPARE TO CONNECT POWER SUPPLY

Connect to the Power Supply using one of two Methods: Direct Wire Cable (Method 1) or Power Cord (Method 2). Follow the instructions specific to your installation.

WARNING: ELECTRICAL SHOCK HAZARD

- Disconnect electrical power at the fuse box or circuit breaker box before installing dishwasher.
- Failure to do so can result in death or electrical shock.

Method 1 - Direct Wire

01 Drill a 3/4" (1.9 cm) hole into the right-hand cabinet, or the right-hand side of the back wall or floor of the opening. See following graphic for preferred and optional locations.

NOTE: Wiring the dishwasher will be easier if the wire is routed into the opening from the right-hand side.

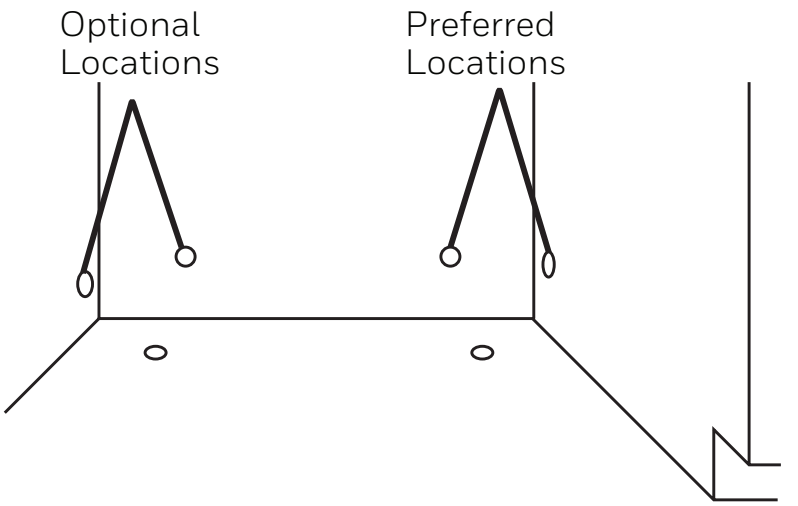

2.19 If There Are No Existing Utility Connections (cont'd)

02 Smooth or cover rough edges of the hole that the wiring will pass through.

Wood Cabinet - Sand edge of hole until smooth.

Metal Cabinet - Cover edge of hole with grommet (not provided).

03 Route the cable from the power supply through the hole (cable must extend to the front, right-hand side of the opening). Extend cable to 6" (15.2 cm) in front of unit and tape the cable to the floor to keep it from moving when dishwasher is moved into the cabinet opening.

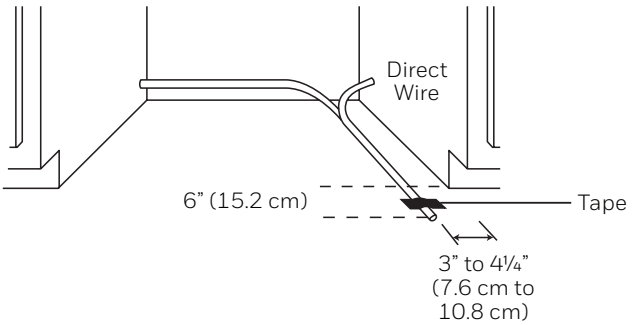

NOTE: You can tape the wire to the floor to secure it while dishwasher is moved into place.

Method 2 - Power Supply Cord

- The power cord and connections must comply with the National Electrical Code, Section 422 and/or local codes and ordinances. Recommended cord length is 54" min. and 64" max.
- A mating 3 prong, ground-type wall receptacle is required in a cabinet next to the dishwasher opening.
- A power cord kit part #BK500 is available for purchase from an authorized parts dealer.

01 Drill a 11/2" (3.8 cm) hole in the cabinet rear or side. Preferred and Optional locations are shown in the following graphic.

02 Smooth edges of hole for power cord.

Wood Cabinet - Sand edges of hole until smooth.

Metal Cabinet - Cover edges of hole with grommet (not provided).

03 Attach power cord to dishwasher before moving it into the opening.
See "Connect Power Supply" section for proper installation technique.

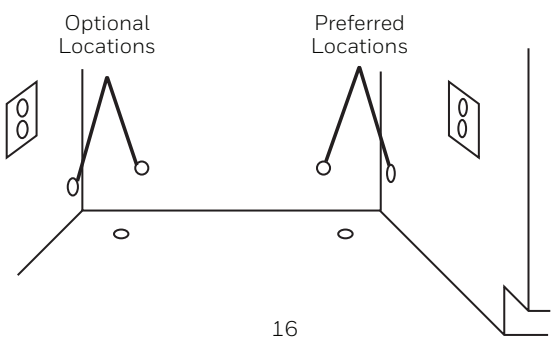

2.19 If There Are No Existing Utility Connections (cont'd)

WARNING: ELECTRICAL SHOCK HAZARD

- Plug into a grounded 3 prong outlet.
- Do not remove the ground prong from the power cord plug.
- Do not use an adapter.
- Do not use an extension cord.
- Failure to do so can result in death, fire or electrical shock.

2.2 Connecting The Water Line

01 Drill a 1/2" (1.3 cm) hole in the cabinet side, rear or floor. Preferred and optional locations are shown in the following graphic.

02 Attach copper tubing to the manual shutoff valve.

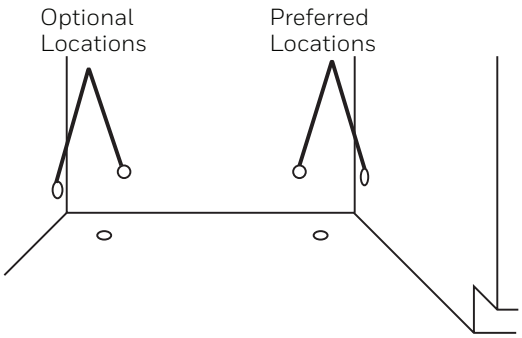

03 Slowly feed the copper tubing through the hole into the opening. Continue feeding the tubing, until there is enough length to connect to the inlet (front, left-hand side of the dishwasher) yet remain within the required boundary.

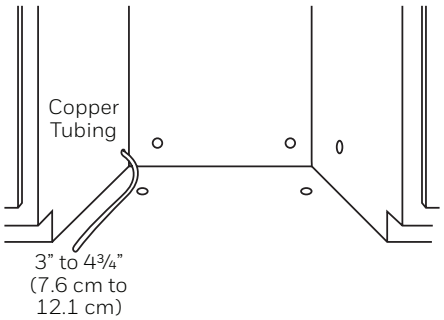

04 Slowly turn water shutoff valve to "ON" position. Flush water into a shallow pan to get rid of particles that may clog the inlet valve.

05 Turn shutoff valve to "OFF" position.

NOTE: You can tape the hose to the floor to secure it while dishwasher is moved into place.

2.2 Connecting The Water Line (cont'd)

CONNECTING THE POWER SUPPLY

The drain hose will be connected to the house drain system after the dishwasher is installed in the opening.

01 Drill a 11/2" (3.8 cm) hole in cabinet wall or floor on the side of the opening closest to the sink.

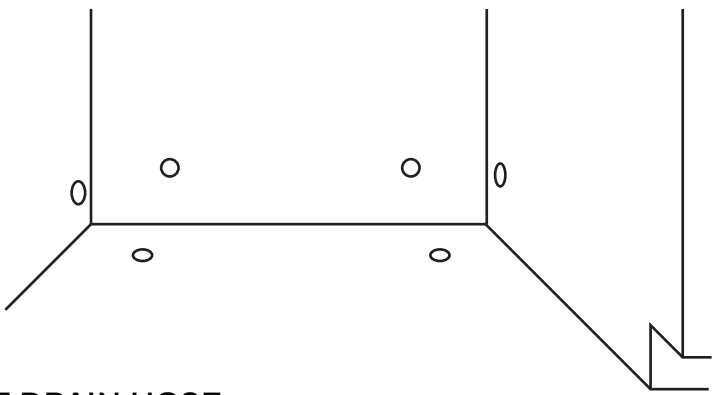

CONNECTING THE DRAIN HOSE

01 Grasp the sides of the dishwasher at the edges of the door panel, and place the dishwasher in front of the opening.

02 Insert the drain hose into the hole in the cabinet wall.

03 Attach drain hose to the back of the dishwasher and secure with a hose clamp.

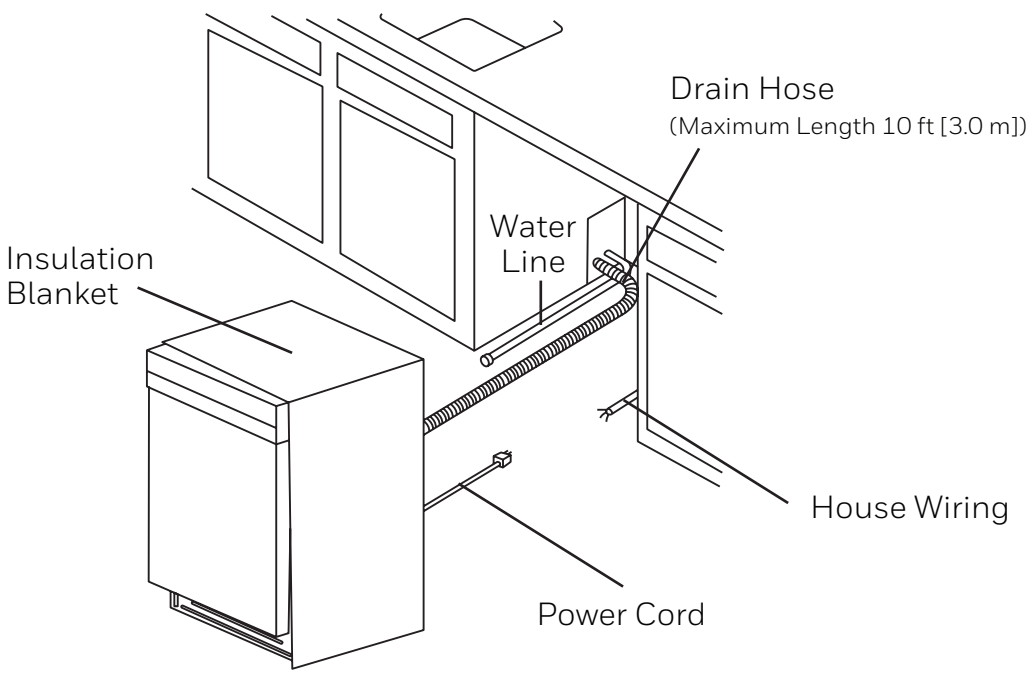

2.21 Slide Dishwasher Partially Into Opening

WARNING

- Do not use dishwasher until completely installed.
- Do not push down on open door.
- Doing so can result in serious injury or cuts.

01 Position power supply.

- If dishwasher has a power supply cord, insert power supply cord into the hole cut into the cabinet.
- If using a direct-wire connection, check that the wiring is on the right front side of opening.

02 Make sure the drain hose is not kinked under the dishwasher and there is no interference with the water line and wiring or any other component.

03 Slowly move the dishwasher into the opening a few inches at a time. As you proceed, pull the drain hose, water supply hose and cord through the opening under the sink or cabinet. Stop pushing when the dishwasher is a few inches in front of the adjacent cabinetry.

NOTE: Do not push against the front of the panel or on the console – they will dent.

Reposition dishwasher by grasping both sides with hands.

Do not push against front door panel with knee. Damage to the door panel will occur.

04 Push dishwasher completely into the opening so that the front corners of the dishwasher door are flush with the cabinet doors.

NOTE: It is all right if the dishwasher fits tightly into cabinet opening. Do not remove insulation blanket – the blanket reduces the sound level.

2.22 Level Dishwasher

IMPORTANT: Dishwasher must be level for proper dish rack operation and wash performance.

01 Level the dishwasher so that its front panel is aligned with the adjacent cabinet doors.

- To Lower - Turn the leveling leg counterclockwise.
- To Raise - Turn the leveling leg clockwise.

NOTE: With some installations, it may be easier to adjust the front leg using a flat blade screwdriver.

02 Check that the leveling legs are firmly against the floor.

03 Close and latch the door, and place level against the front panel. Check that dishwasher is plumb. If needed, adjust leveling leg or add shims until dishwasher is plumb.

NOTE: Shims must be securely attached to floor to prevent their movement when the dishwasher is operated.

Do not place the dishwasher on the water supply line, drain hose, or power cable. Also, make sure they are not folded or twisted.

04 Repeat for other side of dishwasher.

05 Place level on door and rack track inside the tub as shown. Check that dishwasher is level from side to side, and from back to front. If the dishwasher is not level, adjust front legs up or down until dishwasher is level.

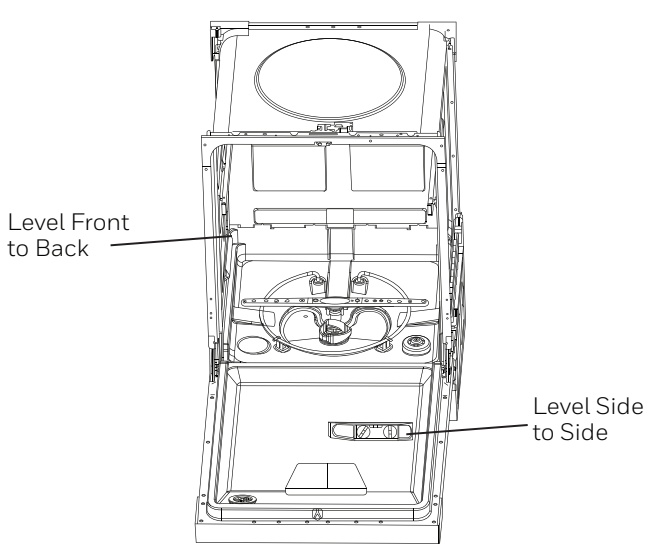

NOTE: Pull lower rack out about halfway. If the rack rolls forward or back into the dishwasher, the dishwasher must be leveled again.

2.23 Connect To Power Supply

DIRECT WIRE CABLE

WARNING: ELECTRICAL SHOCK HAZARD

- Electrically ground dishwasher.
- Connect ground wire to green ground connector in terminal box.
- Do not use an extension cord.
- Failure to follow these instructions can result in death, fire, or electrical shock.

IMPORTANT: Contact a qualified electrician. Be sure that the electrical connection and wire size are adequate and in conformance with the National Electrical Code, ANSI/NFPA No. 70-latest edition and all local codes and ordinances.

01 Confirm that power is turned off at the source.

02 Remove terminal box cover. Retain for later use.



03 Install a UL listed/CSA approved strain relief.

04 Route the direct wire cable in the channel on the right-hand side of the dishwasher base. Make sure that the dishwasher is not resting on and/or pinching the wire.

05 Pull direct wire through strain relief in terminal box.

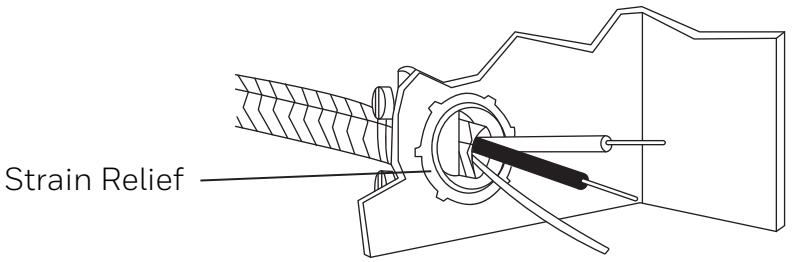

2.23 Connect To Power Supply

DIRECT WIRE CABLE

06 Connect the wires as follows using UL listed wire nuts of the appropriate size to connect direct wire to 16-gauge dishwasher wire.

Power Supply Wire:		Terminal box wire:
white	⟷	white
black	⟷	black
ground wire	⟷	ground connector

NOTES:

- Use UL listed wire nuts of the appropriate size to connect your household wiring to 16-gauge dishwasher wiring.
- Insert wire ends into twist on connector. Do not pre-twist bare wire.
- Twist connector.
- Gently tug on wires to be sure both wires are secured.

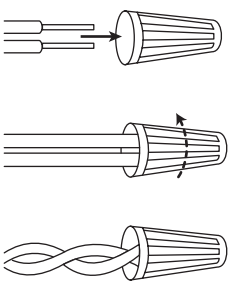

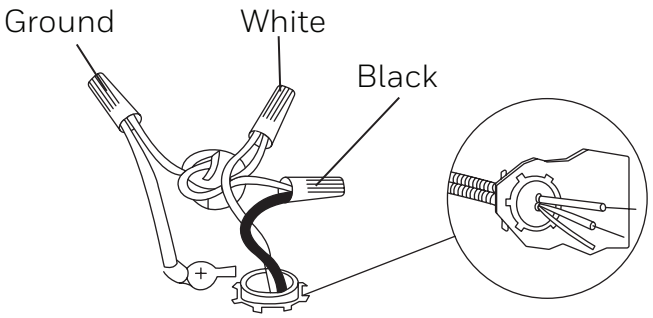

07 Tighten strain relief screws to secure cord.

08 Reinstall terminal box cover with wire nuts inside terminal box.

09 Make sure wires are not pinched by cover.

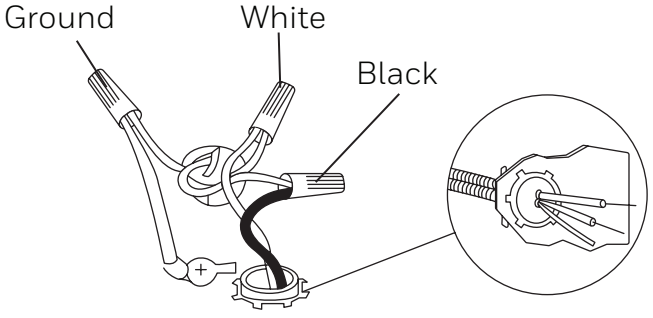

2.23 Connect To Power Supply

CONNECT POWER CORD

WARNING: ELECTRICAL SHOCK HAZARD

- Plug into a grounded 3 prong outlet.
- Do not remove the ground prong from the power cord plug.
- Do not use an adapter.
- Do not use an extension cord.
- Failure to do so can result in death, fire or electrical

IMPORTANT: The power cord and connections must comply with the National Electrical Code, Section 422 and/or local codes and ordinances. Recommended cord length is 54” min. and 64” max.

01 Confirm that power is turned off at the source.

02 Remove junction box cover. Retain for later use.



03 Install a UL listed/CSA approved strain relief.

04 Route power cord in the channel on the right-hand side of the dishwasher base. Make sure that the dishwasher is not resting on and/or pinching the wire.

05 Pull the power cord through the strain relief in the junction box.

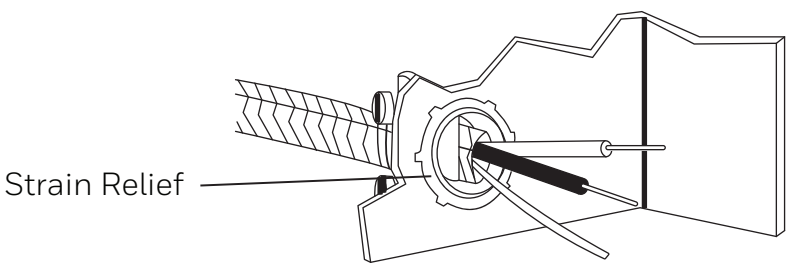

2.23 Connect To Power Supply

DIRECT WIRE CABLE

06 Connect the wires as follows using UL listed wire nuts of the appropriate size to connect direct wire to 16-gauge dishwasher wire.

Power Supply Wire:		Terminal box wire:
white	⟷	white
black	⟷	black
ground wire	⟷	ground connector

NOTES:

- Use cUL/UL listed wire nuts of the appropriate size to connect the power cord to 16-gauge dishwasher wiring.
- Insert wire ends into the wire nut. Do not pre-twist bare wire.
- Twist the wire nut.
- Gently tug on wires to be sure both wires are secured.

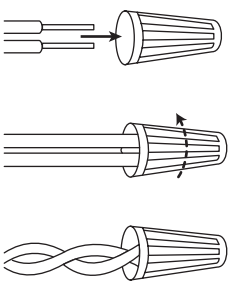

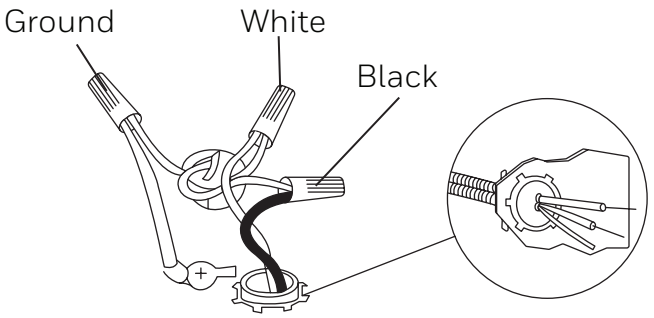

07 Tighten strain relief screws to secure the power cord.

08 Gently guide the wire nuts into the junction box, and then replace the junction box cover making sure to not pinch the wires.

2.23 Connect To Water Supply

NOTES: Handle and reposition the copper tubing gently; it bends and kinks easily.

01 Connect the water supply line to the 90° elbow. Do not overtighten

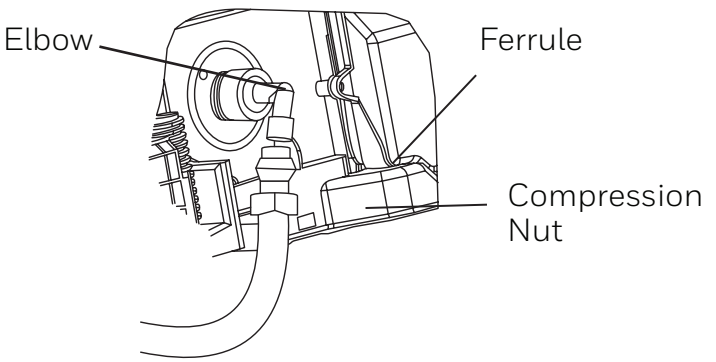

02 Route the water supply line in the channel on the left-hand side of the base. To minimize the noise caused by vibration when using the dishwasher, make sure the supply line does not touch the dishwasher base, frame, or motor. Make sure the dishwasher is not resting on and or pinching the supply line.

03 Tighten the compression nut until snug. Do not overtighten.

04 Place a paper towel under elbow, and then turn on the water supply to check for leaks

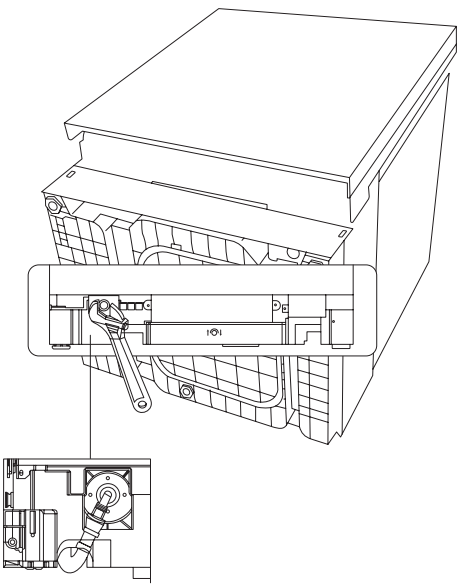

NOTES: After installation, the elbow should face the dishwasher card slot at the right on the bottom.

2.24 Connect To House Drain System

01 Connect the drain hose to the waste tee or garbage disposal using one of the following methods.

- **Option 1 –** Garbage Disposal - With Air Gap
- **Option 2 –** No Garbage Disposal- With Air Gap
- **Option 3 –** Garbage Disposal - No Air Gap*
- **Option 4 –** No Garbage Disposal - No Air Gap*

*an air gap is recommended

IMPORTANT:

- Always use a new drain hose when installing a new dishwasher.
- Total drain hose length must not exceed 10 ft (3.05 m), for proper drain operation.
- To minimize the noise caused by vibration when using the dishwasher, route the drain hose so that it avoids contact with the floor and the edge of the hole in the cabinet through which the hose passes.

02 The molded end of the drain hose will fit 5/8" (1.6 cm), 3/4" (1.9 cm) or 1" (2.5 cm) diameter connections on an air gap, waste tee or disposal. Cut on the marked line as required for your installation.

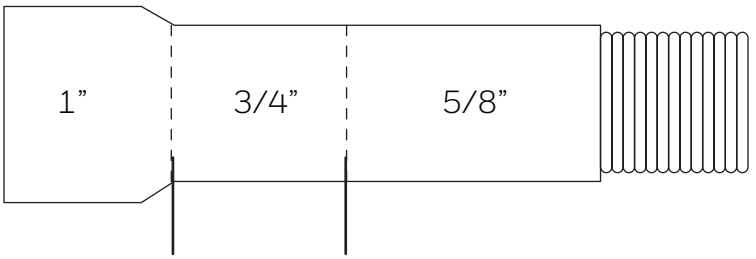

NOTE: Use 5/8" or 7/8" inside diameter hose and a coupler to connect the two hose ends. Secure the connection with hose clamps if an extension is required.

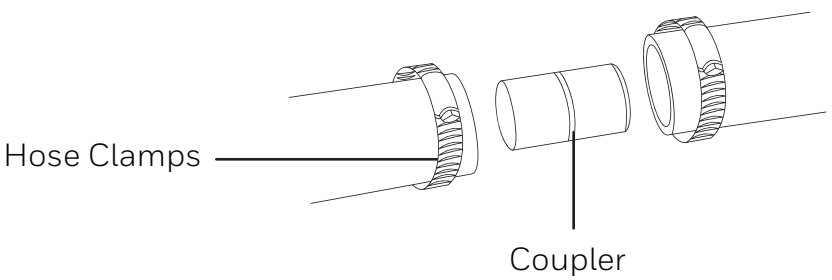

03: Secure the drain hose to the air gap, waste tee or garbage disposal with clamps.

2.24 Connect To House Drain System

Option 1 – (Garbage Disposal - With Air Gap):

01 Remove the knockout drain plug from the disposal inlet. Using a screwdriver and hammer, firmly tap the plug. The plug will separate and fall into the disposal.

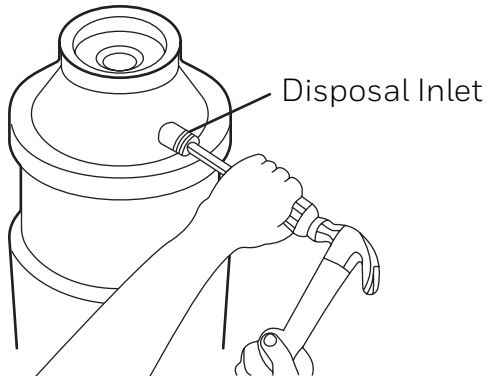

02 Remove the drain plug from the disposal.

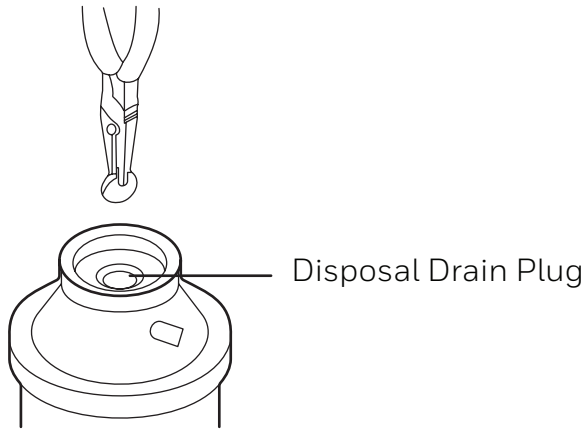

IMPORTANT: If you need to cut the drain hose to fit the diameter of the connection, cut only the rubber end of the hose, as shown earlier in this section (do not cut into the ridged section).

03 Using a screw-type clamp*, attach the drain hose to the air gap. Cut the rubber end of the hose, as needed.

2.24 Connect To House Drain System

Option 1 – (Garbage Disposal - With Air Gap):

04 Use a rubber hose connector* with a screw type clamp* to connect air gap to garbage disposal inlet.

Note: This connection must be located before the drain trap and at least 20” (50.8 cm) above the floor where dishwasher will be installed.

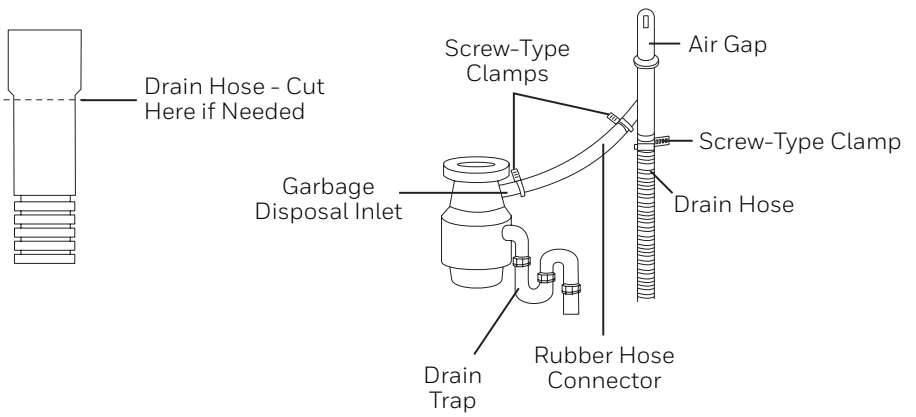

*Parts available from local plumbing supply store.

Option 2 – (No Garbage Disposal - With Air Gap):

IMPORTANT: If you need to cut the drain hose to fit the diameter of the connection, cut only the rubber end of the hose, as shown earlier in this section (do not cut into the ridged section).

01 Attach drain hose to air gap with large screw-type clamp. Cut the rubber end of the drain hose, as needed.

02 Use a rubber hose connector* with spring or screw type clamps* to connect air gap to garbage disposal inlet.

Note: This connection must be located before the drain trap and at least 20” (50.8 cm) above the floor where dishwasher will be installed.

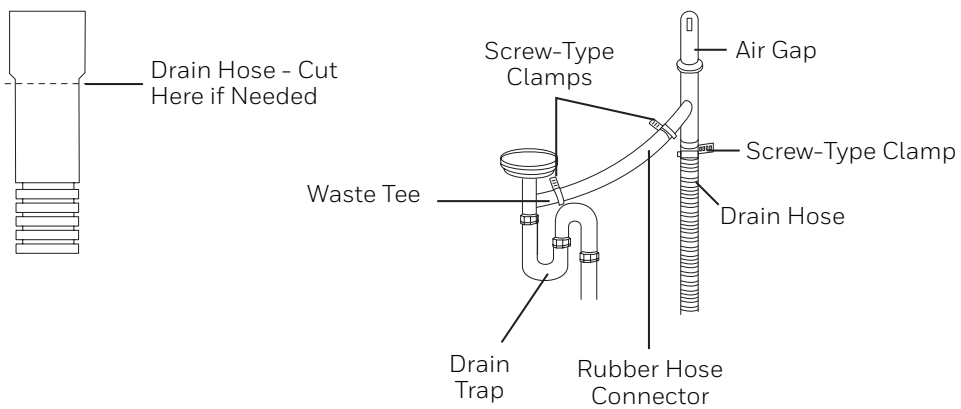

*Parts available from local plumbing supply store.

2.24 Connect To House Drain System

Option 3 – (Garbage Disposal - No Air Gap):

01 Remove the knockout drain plug from the disposal inlet. Using a screwdriver and hammer, firmly tap the plug. The plug will separate

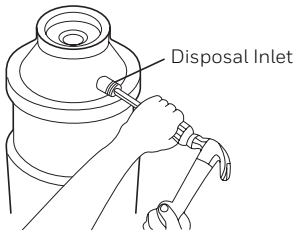

02 Remove the drain plug from the disposal.

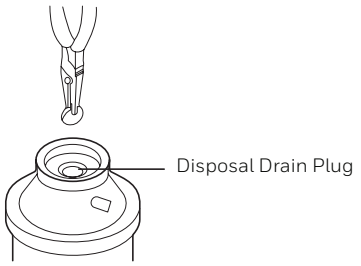

IMPORTANT: If you need to cut the drain hose to fit the diameter of the connection, cut only the rubber end of the hose, as shown earlier in this section (do not cut into the ridged section).

03 Using a screw-type clamp*, attach the drain hose to the garbage disposal inlet.

NOTES:

- This connection must be located before the drain trap and at least 20” (50.8 cm) above the floor where dishwasher will be installed.
- It is recommended that the drain hose be looped up and securely fastened to the underside of the counter at a minimum height of 32” (81.3 cm).

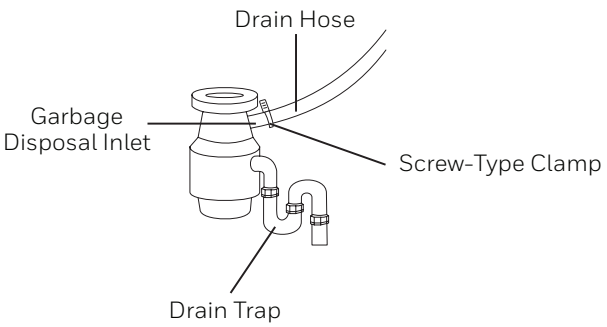

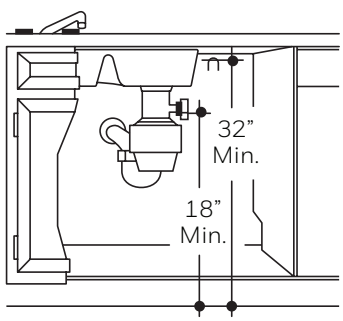

*Parts available from local plumbing supply store.

2.24 Connect To House Drain System

Option 4 – (No Garbage Disposal - No Air Gap):

IMPORTANT: If you need to cut the drain hose to fit the diameter of the connection, cut only the rubber end of the hose, as shown earlier in this section (do not cut into the ridged section)

01 Attach drain hose to waste tee with 11/2" to 2" (3.8 to 5 cm) screw-type clamp*.

NOTES:

- This connection must be located before the drain trap and at least 20" (50.8 cm) above the floor where dishwasher will be installed.
- It is recommended that the drain hose be looped up and securely fastened to the underside of the counter at a minimum height of 32" (81.3 cm).

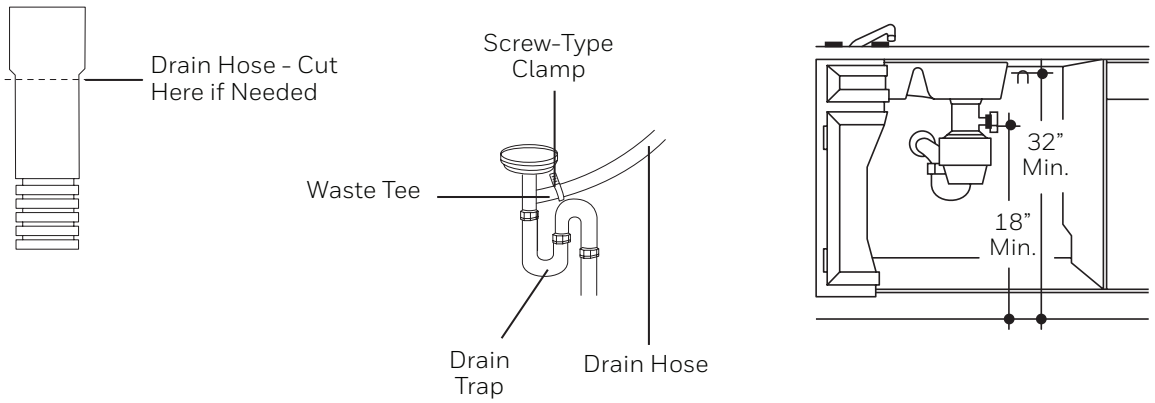

*Parts available from local plumbing supply store.

Secure Dishwasher

IMPORTANT: The dishwasher must be secured to adjacent cabinets to keep it from tipping when the door is opened.

Follow the instructions to install mounting brackets in the manner required for your installation method. You will secure the dishwasher after it is connected to the utilities and moved into the opening.

WARNING: EXCESSIVE WEIGHT HAZARD

- Use two or more people to move and install dishwasher.
- Failure to do so can result in back or other injury.

2.25 Secure Dishwasher

Installation to Adjacent Cabinets

01 Remove the plastic tub caps from the inside of the dishwasher tub.

02 Drive a wood screw through the hole in the side of the dishwasher into the cabinet frame.

IMPORTANT: Drive the screws straight and flush. Protruding screw heads will scratch the side of the dishwasher. This method is for attaching the dishwasher to the side of the cabinet, and it should be done when the countertop is made of granite or other breakable materials.

03 Reinsert the plastic tub caps.

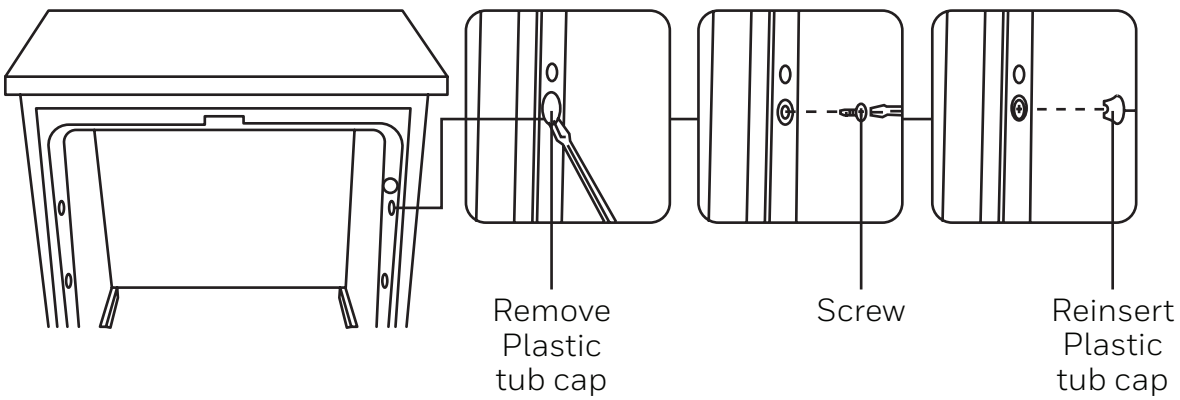

CAUTION
Do not over tighten side screws

04 Close dishwasher door and verify that gap between the countertop and the top of the dishwasher door is at least 1/4" (0.64 cm).

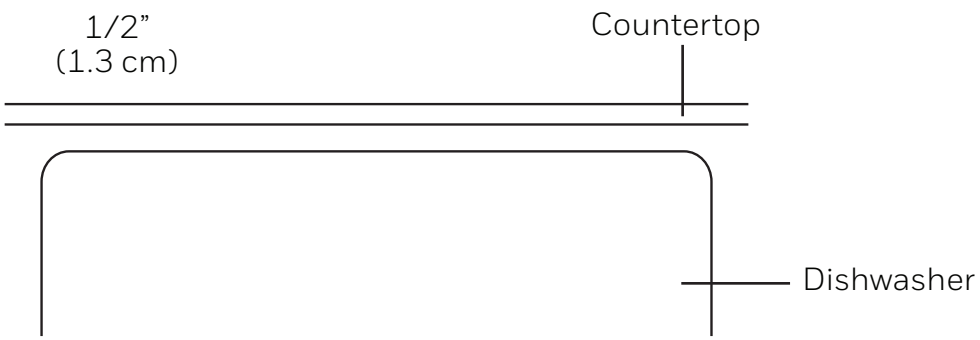

05 Remove towel from dishwasher.

06 Reinstall the lower dish rack.

3 OPERATING REQUIREMENTS

3.1 Electrical Requirements

Warning: Electrical Shock Hazard

- Electrically ground dishwasher.
- Connect ground wire to green ground connector in terminal box.
- Do not use an extension cord.
- Failure to follow these instructions can result in death, fire, or electrical shock.

This dishwasher is designed for operation on an adequately wired individual 120 V, 60 Hz, 15- or 20-amp fused electrical supply with copper wire only. It is recommended that a time-delay fuse or circuit breaker is used, and that a separate circuit serving only this appliance is provided. If an outlet is used, the outlet should be placed in adjacent cabinet.

3.2 Location Requirements

- Install where dishwasher is protected from the elements. Protect against freezing to avoid possible rupture of fill valve. Such ruptures are not covered by the warranty. For winter storage information, see “Storing” in the “Dishwasher Care” section.
- Install and level dishwasher on a floor that will hold the weight and in an area suitable for its size and use.

3.3 Water Supply Requirements

- The water supply temperature should be 120°F to 150°F (49°C to 66°C).
- The water supply must maintain water pressure between 20 and 80 psi for sufficient flow.

3.4 Parts and features

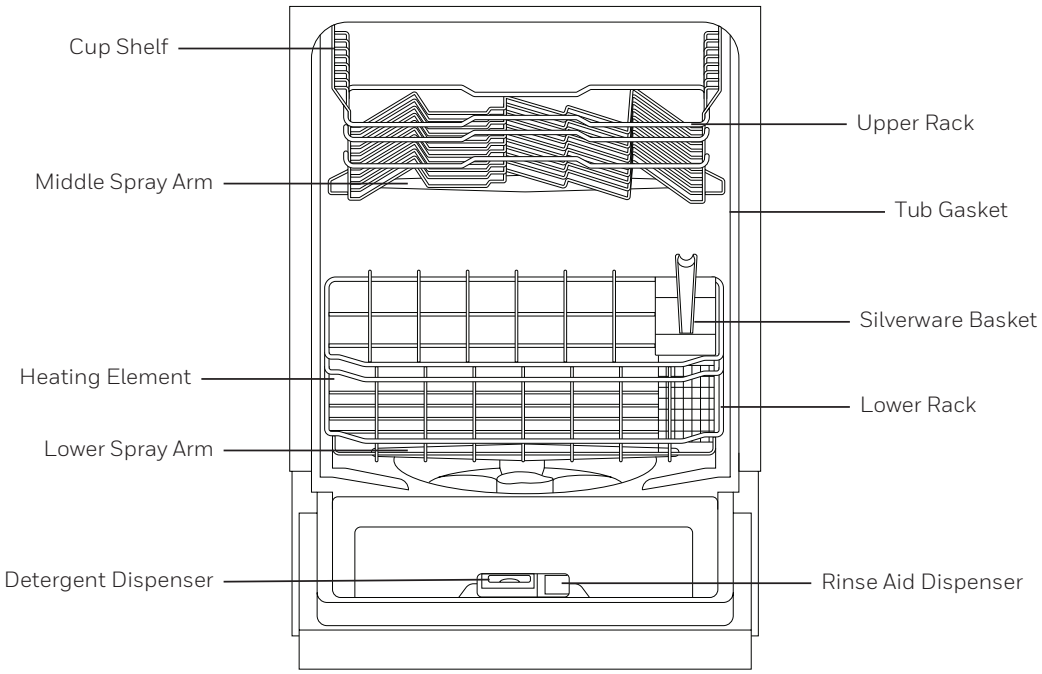

Specifications

Capacity	12 place settings
Dimensions (WxDxH):	23 3/5” x 22 7/10” x 33 3/4” (600x576x855mm)
Weight Unpacked:	81.35 lb (36.9kg)
Power Supply:	120 volts, 60 Hz
Rated Power Usage:	Wash motor 50 W Heater 840 W
Water Feed Pressure:	20 - 80 psi (138 - 552 kPA)

3.5 Filter System

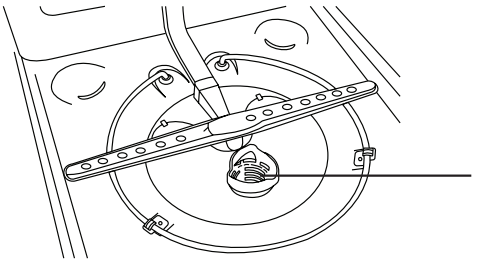

Your dishwasher has a multiple filter system, which helps your dishwasher perform better using less water and less energy. The filter system includes three filters that work in combination to separate dirty and clean water into different chambers.

3.6 Smart Wash System

Your dishwasher has a Smart Wash system which can be used by selecting the Auto cycle. The Smart Wash system senses the soil level of the load and adjusts the wash cycle accordingly. Your dishwasher can determine the type of cycle required to clean the dishes and will clean more efficiently every time.

3.7 Adjustable Upper Rack

The Adjustable Upper Rack feature allows you to load taller items in either the upper or lower rack. The upper rack of your dishwasher can be adjusted 2” (5.08 cm).
Adjusting the clearance of the Upper Rack increases or decreases the clearance of the lower rack, as shown. For instructions, see the “Adjustable Upper Rack” section.

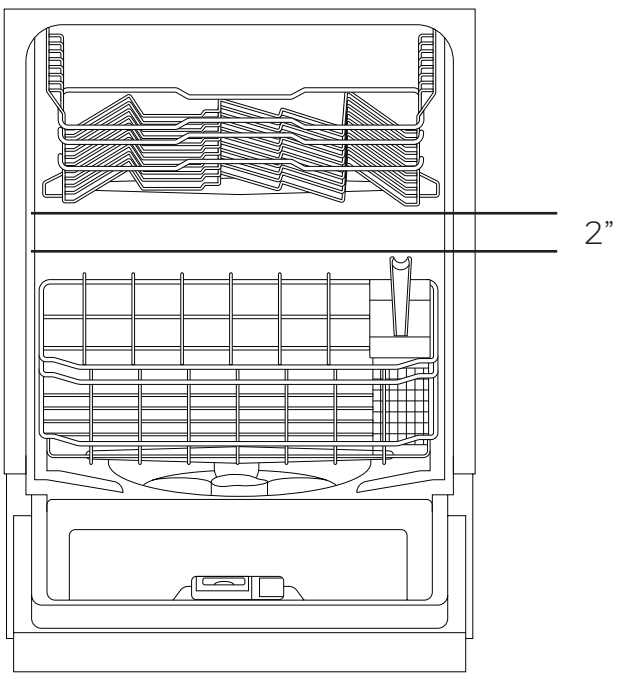

3.8 Start Up Guide

IMPORTANT:

• Properly dispose of/recycle all packing material.

• Read this entire User Manual. You will find important safety information and useful operating tips.

HOW YOUR DISHWASHER CLEANS

Your dishwasher cleans by spraying a mixture of hot water and detergent through the spray arms against soiled surfaces. The dishwasher fills with water covering the filter area. Water is then pumped through the multiple filters and spray arms. Soil particles are separated from the water and go down the drain as the water is pumped out and replaced with clean water. The number of water fills will vary depending on the cycle selected.

BEFORE USING YOUR DISHWASHER

01 Check the filters for debris that may have been introduced from the packaging or during installation. See the “Clean Filters” section.

02 Add Rinse Aid. See “Proper Use of Rinse Aid.”

USING YOUR NEW DISHWASHER

NOTE: To decrease cycle time and possibly improve performance, turn on the hot water faucet nearest to the dishwasher until the water runs hot. Turn off the water.

01 Load dishwasher. See “dishwasher loading”

02 Add detergent. See “Proper Use of Detergent.”

03 Select desired cycle and options. See “cycle and option charts”

- Only the options available for the cycle selected will illuminate
- Light above each selected Cycle and Option will illuminate to indicate they are selected.

04 Press Start

IMPORTANT: For the dishwasher to begin operating, the door must be closed within 4 seconds after pressing start/cancel

05 Close the door firmly to latch

06 Upon the completion of the cycle. The indicator light on the front of the door will illuminate blue and remain on for 15 minutes. After 15 minutes the dishwasher will enter a low power mode and all lights will turn off.

3.9 Controls

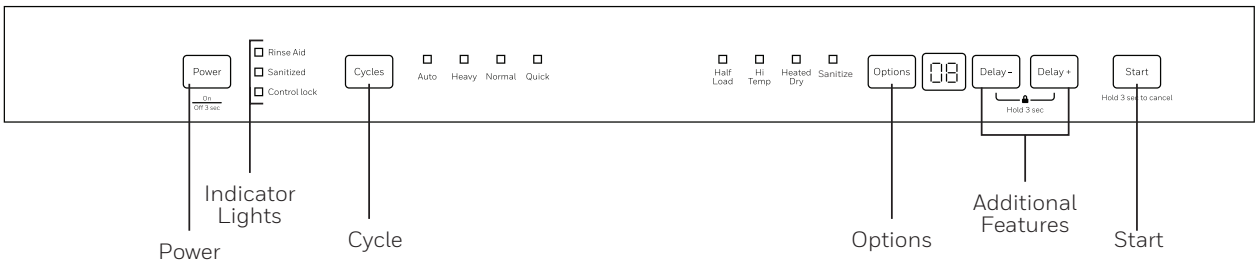

NOTE: The dishwasher controls can be accessed and operated only when the dishwasher is open.

01 Power

Press this button to turn on or turn off the dishwasher

02 Cycles

Press this button to select corresponding washing program code.

Auto, Heavy, Normal and Quick can be selected.

Auto

Auto cycle uses sensors in the dishwasher to determine the soil level of the dish load,and then adjusts the wash cycle to optimize wash performance,water and energy usage.

Heavy

Heavy cycle is for pots, pans, casseroles and dinnerware with dried-on or baked on soil.

Normal

Normal cycle with only the Heat Dry option selected is recommended to completely wash and dry a full load of normally soiled dishes. The energy usage label is based on this cycle and option combination with the upper rack in the raised position.

Quick

Quick cycle is for lightly soiled or well-rinsed dish loads.

3.9 Controls

NOTE: The dishwasher controls can be accessed and operated only when the dishwasher is open.

03 Additional Features

Delay

The Delay Time feature allows you to program the dishwasher to

begin the selected wash cycle 1 to 24 hours later.

Press the DELAY control repeatedly to toggle between 00 to 24 in the screen.

NOTE: To cancel the Delay feature, press and hold the START control

for 3 seconds to Cancel. To begin the wash cycle immediately, press START again.

Control Lock

Use to lock all controls and prevent children from accidently changing the dishwasher cycle or starting the dishwasher.

- Press and hold for 3 seconds Delay- -and Delay + to either activate or cancel the Child Lock option. After the function is selected the control lock light will illuminate. If the the function is canceled,the control lock light will light off.

04 Options

Options enhance the wash cycle. Some options are available with only certain Wash Cycles. Refer to the “Cycle and Options Charts” to see which options are available for the wash cycle you selected

- Press the desired option control(s). The options control(s) illuminates to indicate which options(s) have been selected.

Heated Dry

When the Heated Dry option is selected, the heater will work during the drying process.

3.9 Controls

Sanitize

The sanitize option sanitizes dishes and glassware in accordance with NSF International NSF/ANSI Standard 184 for Residential Dishwashers. Certified residential dishwashers are not intended for use in licensed food establishments.

When the Sanitize option is selected, the water temperature will reach 156.2°F (69°C) maximum.

The Sanitize Control illuminates to indicate when the Wash cycle with the Sanitize option
is completed. The light will turn off after the door has been opened for 30 seconds.

NOTE: It is possible that the water will not reach 156°F (69°C) in the Sanitize mode, if the temperature of the incoming hot water does not meet the minimum requirement of 120°F (49°C).

WARNING: Only sanitizing cycles have been designed to meet the requirements for soil removal and sanitization efficacy. There is no intention, either directly or indirectly, that all cycles on a certified machine have passed the sanitization performance test.

Half Load

When you have about or less than half of full place settings dishware to wash, you can choose this function to save energy and water.

HI TEMP

Use to maintain the water temperature at140° F(60° C) max during the wash portion of the cycle.

05 INDICATOR LIGHTS

Rinse Aid

The Rinse Aid indicator light illuminates when the rinse aid level is low. Rinse Aid should be added to the Rinse Aid dispenser.

Sanitized

The Sanitized indicator light illuminates when the cycle using the Sanitize option is finished.

The light turns off when the door is opened and then closed or any button is pressed.

Control Lock

Turns on when the control lock function is selected. Turns off when the control lock function is canceled.

3.9 Controls

Sanitize

The sanitize option sanitizes dishes and glassware in accordance with NSF International NSF/ANSI Standard 184 for Residential Dishwashers. Certified residential dishwashers are not intended for use in licensed food establishments.

When the Sanitize option is selected, the water temperature will reach 156.2°F (69°C) maximum.

The Sanitize Control illuminates to indicate when the Wash cycle with the Sanitize option
is completed. The light will turn off after the door has been opened for 30 seconds.

NOTE: It is possible that the water will not reach 156°F (69°C) in the Sanitize mode, if the temperature of the incoming hot water does not meet the minimum requirement of 120°F (49°C).

WARNING: Only sanitizing cycles have been designed to meet the requirements for soil removal and sanitization efficacy. There is no intention, either directly or indirectly, that all cycles on a certified machine have passed the sanitization performance test.

Half Load

When you have about or less than half of full place settings dishware to wash, you can choose this function to save energy and water.

HI TEMP

Use to maintain the water temperature at140° F(60° C) max during the wash portion of the cycle.

05 INDICATOR LIGHTS

Rinse Aid

The Rinse Aid indicator light illuminates when the rinse aid level is low. Rinse Aid should be added to the Rinse Aid dispenser.

Sanitized

The Sanitized indicator light illuminates when the cycle using the Sanitize option is finished.

The light turns off when the door is opened and then closed or any button is pressed.

Control Lock

Turns on when the control lock function is selected. Turns off when the control lock function is canceled.

3.10 Cycle And Option Charts

Depending on the Cycle selected, the Options available for selection will illuminate.

Cycle times are approximate and will vary depending on the wash cycle and options selected.

NOTE: Added Options can add more time and use more water.

Hot Water is necessary to activate the dishwasher detergent and melt fatty food residue.

An automatic sensor checks the temperature of the incoming water. If the water is not hot enough, the cycle will be lengthened to heat the water for the main wash.

The Smart Wash Sensor detects the soil level of the dish load and may increase or decrease cycle time depending on the number of water fills required to clean the load.

Cycle	Options Available	Water Available	Cycle Time
Auto	Heated Dry Sanitize Half Load Hi Temp	3.04-7.0gal 11.5-26.5L	109-149 mins
Heavy	Heated Dry Sanitize Half Load Hi Temp	7.13 gal 27 L	151 mins
Normal	Heated Dry Sanitize Half Load Hi Temp	3.04-7.04gal 11.5-26.6 L	108-146 mins
Quick	Heated Dry Sanitize	4.11 gal. 15.5 L	60 mins

3.11 Dishwasher Loading

PREPARE DISHES

- Empty liquids from glasses and cups.
- Remove leftover food, bones, toothpicks and other hard items from the dishes and discard.
- It is not necessary to hand-rinse dishes before loading them into the dishwasher with the following exceptions:
- Foods such as mayonnaise, mustard, vinegar, lemon juice and tomato-based products may discolor stainless steel and plastics if allowed to remain on them for any length of time.
- Burned-on foods should be loosened before loading the cookware into the dishwasher.

LOAD DISHES

- It is IMPORTANT for the water spray to reach all soiled surfaces. Load dishes so they are not stacked or overlapping if possible. For best drying results, water must be able to drain from all surfaces.
- Load heavy pots and pans carefully. Heavy items can dent the stainless steel interior of the door if they are dropped or bumped.
- Make sure pot lids and handles, pizza pans, cookie sheets, etc., do not interfere with the spray arm rotation.
- Make sure both the upper and lower spray arms are not blocked and move freely.

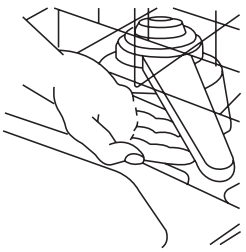

QUIET OPERATING TIPS

To avoid thumping/clattering noises during operation:

- Make sure lightweight items are secured in the racks.
- Make sure pot lids and handles, pizza pans, cookie sheets, etc., do not touch interior walls or interfere with the rotation of the spray arm.
- Load dishes so they do not touch one another.

NOTE: For built-in models, keep sink drain plugs closed during dishwasher operation to prevent noise transfer through drains.

3.12 Upper Rack

The upper dishwasher rack is designed for cups, glasses, small plates, bowls and plastic items marked dishwasher safe. The upper rack can be easily adjusted 2” (5 cm) up or down to accommodate taller items in either in the top or bottom rack.

ADJUST UPPER RACK

IMPORTANT:

- Remove all items before adjusting the rack. The rack must be empty.

To adjust the height of the upper rack, follow these steps:

Pull out the upper basket.

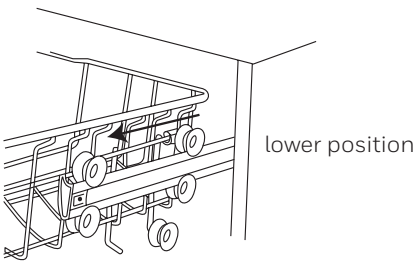

Remove the upper basket.

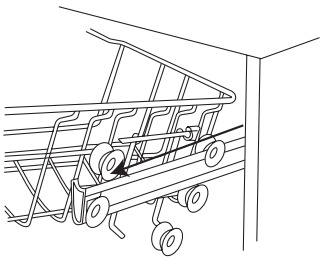

Re-attach the upper basket to upper 4 or lower rollers.

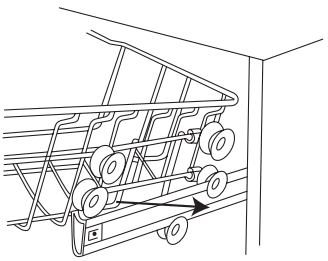

Re-attach the upper basket to upper 4 or lower rollers.

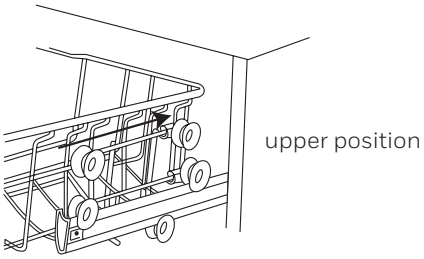

3.12 Upper Rack

NOTE:

The features on your dishwasher rack may vary from the drawings shown.

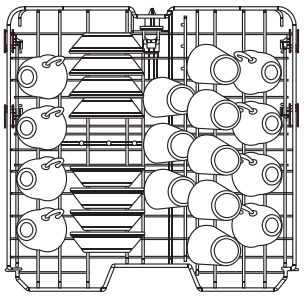

8 Place Settings

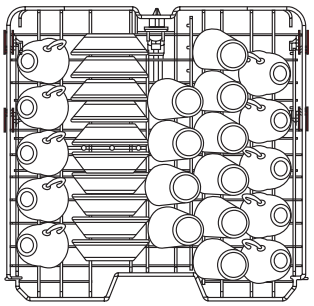

10 Place Settings

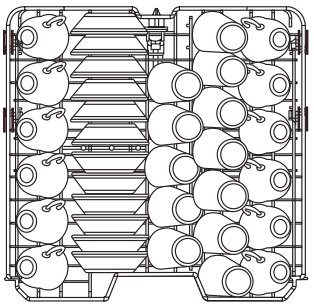

12 Place Settings

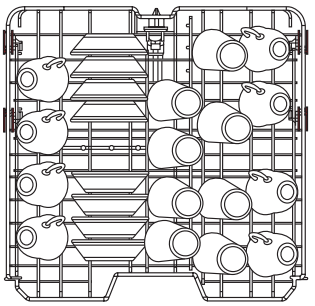

8 Place Settings DOE

IMPORTANT:

Make sure the items loaded in the upper rack do not interfere with the rotation of the middle spray arm located beneath the upper rack. Check for interference by turning spray arm by hand.

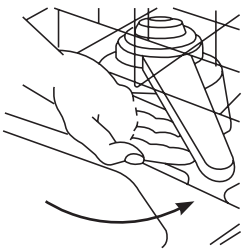

- Place items so that the open ends face downward for cleaning and draining.
- Load glasses and cups in upper rack only. The lower rack is not designed for glasses and cups. Damage can occur.
- Place cups and glasses in the rows between tines. Placing them over the tines can lead to breakage, water spots, and poor cleaning.
- Small bowls, pans and other utensils can be placed in the top rack. Load bowls in the center section for best stability.
- China, crystal and other delicate items must not touch each other during dishwasher operation. Damage may occur.
- Load plastic items so the force of the spray does not move them during the cycle.

3.13 Lower Rack

The lower rack is designed for plates, soup bowls, cookware and bakeware.

The adjustable upper rack allows you to load items up to 12.6” in height in the lower rack.

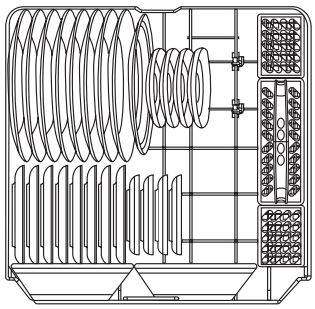

8 Place Settings

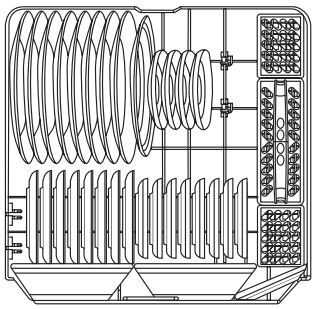

10 Place Settings

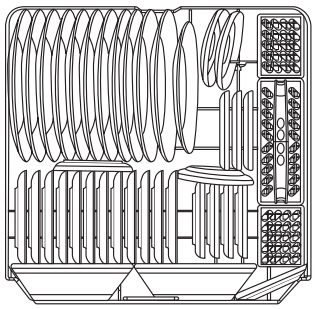

12 Place Settings

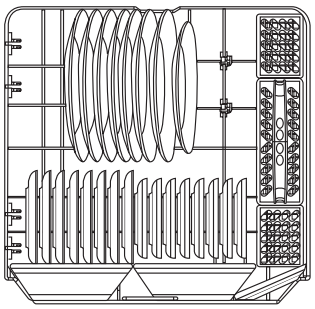

8 Place Settings DOE

LOAD LOWER RACK

NOTE: The features on your dishwasher rack may vary from the drawings shown.

- Do not load glasses, cups, or plastic items in the lower rack.
- Load small items in the lower rack only if they are secured in place.
- Load plates, soup bowls, etc. between tines. Do not nest bowls because the spray will not reach all surfaces.
- Do not load items between the bottom rack and the side of the dishwasher tub.
- Place heavily soiled cookware face down in the rack.

ADJUSTABLE RACK TINES

The fold-down tines in the lower rack make it easier to load extra large or hard-to-fit items such as serving bowls and roasters. The tines may be left in the up position for normal use, or folded down for more flexible loading.

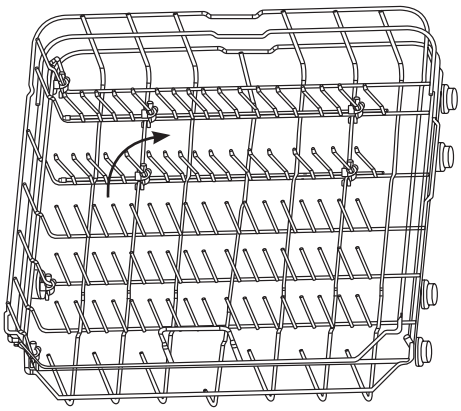

3.14 Loading Silverware

NOTES:

• Do not load silver or silver-plated silverware with stainless steel. These metals can be damaged by contact with each other during washing.

• Some foods (such as salt, vinegar, milk products, fruit juices, etc.), can pit or corrode silverware.

DO NOT WASH ALUMINUM COOKWARE IN YOUR DISHWASHER.

THREE-PIECE SILVERWARE BASKET

The silverware basket consists of three separate sections. For optimum loading flexibility, the center section of the basket can be used individually, joined with one or both side sections or removed.

• Lift handle to remove the silverware basket and set the basket on a

counter or table top.

• Lift up on each side section to disengage the center section from the

keyhole slots in the side sections.

• Either replace the section(s) in the bottom rack and load the

silverware, OR load the silverware while the section(s) are on the

countertop and then replace the basket in the bottom rack.

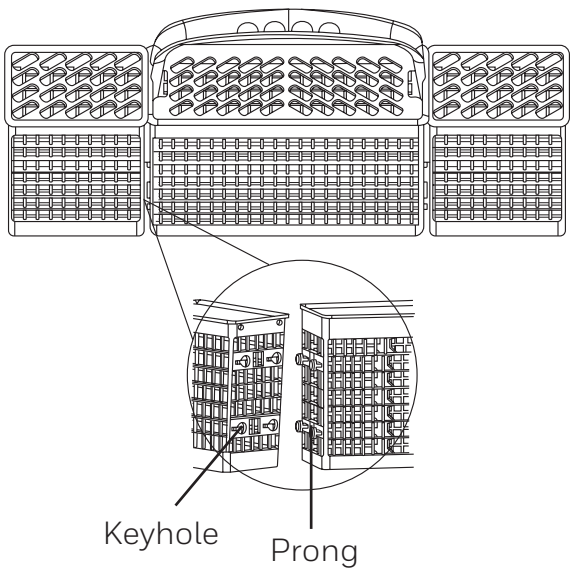

3.14 Loading Silverware

For Best Results:

• Load items with handles down, using the separators to prevent silverware from nesting.

• Place small items such as baby bottle caps, jar lids, corncob holders, etc. in the section(s) with hinged cover(s). Close the cover to hold small items in place.

• Unload or remove the basket before unloading the racks to avoid water drops from falling on the silverware.

• When handles are up, mix items in each section of the basket with some pointing up and some down to avoid nesting. Spray cannot reach nested items.

IMPORTANT: Always load sharp items (knives, skewers, etc.) pointing down. Be sure that nothing protrudes through bottom of the basket or rack that may block the wash arm.

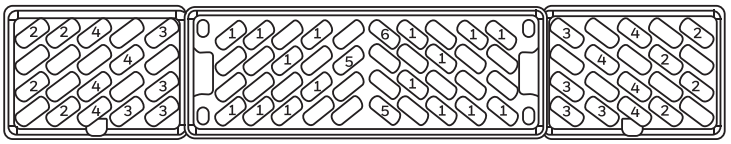

8 Place Settings

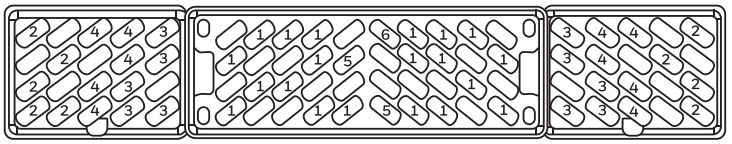

10 Place Settings

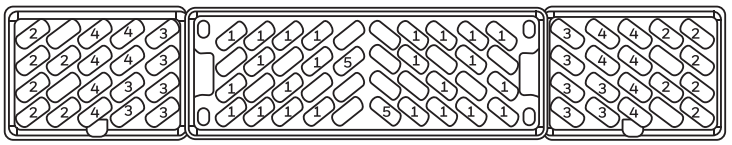

12 Place Settings

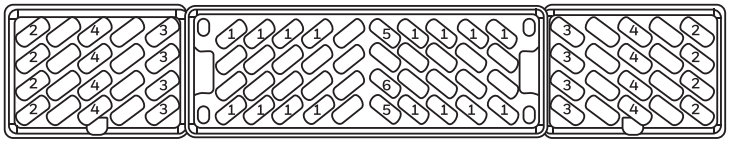

8 Place Settings DOE

1
Spoons

2
Knives

3
Salad Forks

4
Forks

5
Large Spoons

6
Large Forks

4 DISHWASHER USE

4.1 Proper Use Of Detergent

IMPORTANT:

- Use automatic dish washing detergent only. Other detergents can produce excessive suds that can overflow out of the dishwasher and reduce washing performance.
- Add detergent just before starting a cycle.
- Store detergent tightly closed in a cool, dry place. Fresh automatic dishwasher detergent results in better cleaning.

DETERGENT DISPENSER

01 Push the dispenser cover release catch to open the main wash detergent compartment.

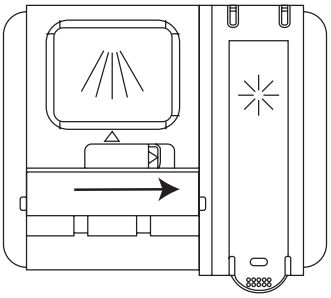

NOTE: The flap is always open at the end of a dishwashing cycle.

02 Add the recommended amount of detergent to the detergent compartment.

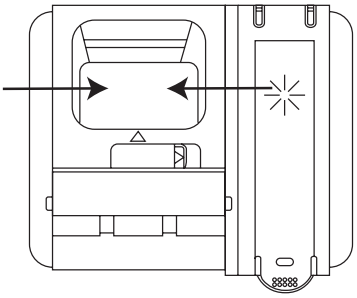

03 Press down on the top of the cover to secure.

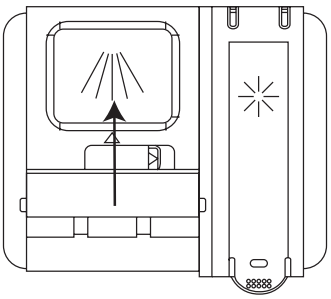

4.1 Proper Use Of Detergent

IMPORTANT:

- Use automatic dish washing detergent only. Other detergents can produce excessive suds that can overflow out of the dishwasher and reduce washing performance.
- Add detergent just before starting a cycle.
- Store detergent tightly closed in a cool, dry place. Fresh automatic dishwasher detergent results in better cleaning.

DETERGENT DISPENSER

01 Push the dispenser cover release catch to open the main wash detergent compartment.

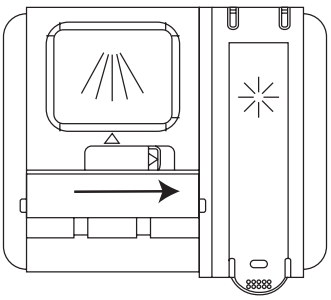

NOTE: The flap is always open at the end of a dishwashing cycle.

02 Add the recommended amount of detergent to the detergent compartment.

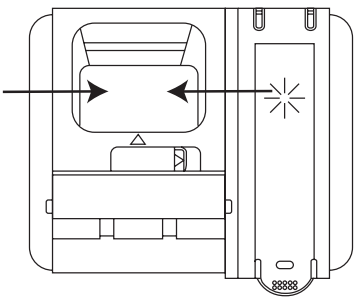

03 Press down on the top of the cover to secure.

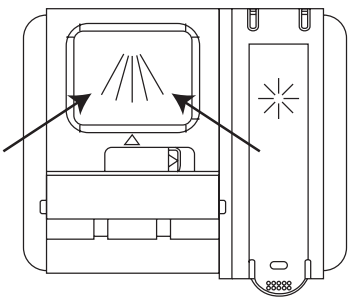

4.1 Proper Use Of Detergent

HOW MUCH DETERGENT TO USE

The amount of detergent to use depends on the soil level of your load, the type of detergent used and the hardness of your water.

- If you use too little detergent, dishes won't be clean.
- If you have soft water and use too much detergent, glassware will etch.

Water Hardness

Water hardness varies depending on your water source. For the best results, your dishwasher is designed to operate with water that has a hardness of no more than 7 grains per gallon. Test kits are available from all major appliance parts retail outlets. If your water has a hardness over 8 grains per gallon, you may consider installing a water softener or regularly use an additive to enhance the performance of your detergent.

4.2 Proper Use Of Rinse Aid

Rinse aid prevents water from forming droplets that can dry as spots or streaks. A small amount of the rinse aid is released into the final rinse water, which allows water to drain from the dishes. Rinse aid greatly improves drying performance after the final rinse. Your dishwasher is designed to use a LIQUID rinse aid. Do not use a solid or bar-type rinse aid.

RINSE AID DISPENSER

Under normal conditions, you will need to fill the rinse aid dispenser approximately once a month. Rinse aid is released through an opening in the dispenser. You do not need to wait until the dispenser is empty to refill it. Try to keep it full, but be careful not to overfill it.

To refill the rinse aid dispenser

01 Lift up the end tab of rinse aid cover to open.

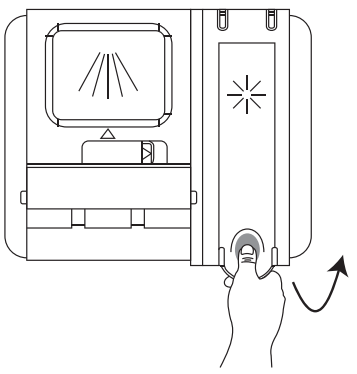

02 Fill the rinse aid dispenser with liquid rinse aid until full. DO NOT overfill.

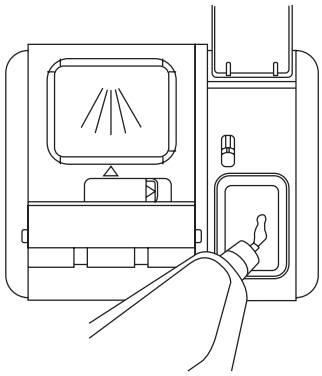

4.2 Proper Use Of Rinse Aid

To refill the rinse aid dispenser (cont'd)

03 Press the rinse aid cover down firmly to close.

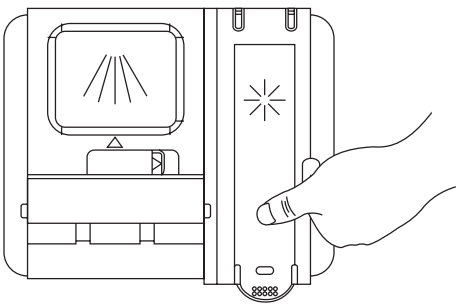

NOTE: Use the viewing port when filling the rinse aid reservoir.

WARNING: Do not fill the reservoir above the full level indicator. Excess rinse aid can overflow during the wash cycle.

To adjust the rinse aid setting

You can adjust the amount of the rinse aid released during the rinse aid according to the following steps:

01 Close the door and power on the dishwasher

02 Within 60 seconds after step 1, press the CYCLES button more than 5 seconds to enter into the setting mode, the rinse aid indicator will blink quickly.

03 Press the CYCLES button to select the proper setting according to your using habits. The setting will change in the following sequence: d3->d4->d5->d1->d2->d3.

04 Without any operation in 5 seconds or press the Power button to complete the setting and exit the setting mode.

4.3 Washing Special Items

If you have doubts about washing a particular item, check with the dishware manufacturer to make sure it is dishwasher safe.

Material	Dishwasher	Comments
Aluminum	Possible	High water temperature and detergents can affect finish of anodized aluminum. Unfinished aluminum will be discolored.
Disposable Aluminum	No	Do not wash disposable aluminum pans in the dishwasher These might shift during washing and transfer black marks to dishes and other items.
Bottles and Cans	No	Wash bottles and cans by hand. Labels attached with glue can loosen and clog the spray arms or pump and reduce washing performance.
Cast Iron	No	Seasoning will be removed and iron will rust.
China/Stoneware	Yes	Always check manufacturer's recommendations before washing. Antique, hand-painted, or over-the-glaze patterns may fade, gold leaf can discolor or fade.
Crystal	Yes	Check manufacturer's recommendations before washing. Some types of leaded crystal can etch with repeated washing.
Gold	No	Gold-colored flatware will discolor.
Glass	Yes	Milk glass yellows with repeated dishwasher washing.

4.3 Washing Special Items

If you have doubts about washing a particular item, check with the dishware manufacturer to make sure it is dishwasher safe.

Material	Dishwasher	Comments
Hollow Handle Knives	No	Handles of some knives are attached to the blade with adhesive that can loosen if washed in the dishwasher.
Pewter, Brass, Bronze	No	High water temperatures and detergent can discolor or pit the finish.
Disposable Plastics	No	Cannot withstand high water temperatures and detergents.
Plastics	Yes	Always check manufacturer's recommendations before washing. Plastics vary in their capacity to withstand high temperatures and detergents. Load plastics in top rack only.
Stainless Steel	Yes	Run a rinse cycle if not washing immediately. Prolonged contact with food containing salt, vinegar, milk products, or fruit juice can damage finish.
Sterling Silver or Silver Plates	Yes	Run a rinse cycle if not washing immediately. Prolonged contact with food containing salt, acid, or sulfide (eggs, mayonnaise, and seafood) can damage finish.
Tin	No	Can rust
Wooden Ware	No	Wash by hand. Always check manufacturer's instructions before washing. Untreated wood can warp, crack, or lose its finish.

5 DISHWASHER CARE

5.1 Cleaning Exterior

CLEANING THE EXTERIOR

In most cases, regular use of a soft, damp cloth or sponge and a mild detergent is all that is necessary to clean outside of your dishwasher.

Clean the stainless steel door and handle regularly with a clean, soft cloth to remove debris.

IMPORTANT: Do not use appliance wax, polish, bleach, or products containing chlorine to clean the stainless steel door.

Control Panel

Gently clean the control panel with a clean, soft cloth.

CLEANING THE INTERIOR

The tub is made of stainless steel designed to resist rust and corrosion if the dishwasher is scratched or dented.

Hard water minerals can cause a white film to build up on the inside surfaces, especially just beneath the door area.

Do not clean the dishwasher interior until it has cooled. Wear rubber gloves. Do not use any type of cleanser other than dishwasher detergent because it may cause foaming or create suds.

DOOR GASKET

Clean the steel inner door and tub with a clean, soft damp cloth.

Using a damp cloth, clean around the door gasket regularly to remove food particles.

CONTROL PANEL

Clean the Control Panel gently with a lightly dampened cloth.

CLEANING THE FILTERS

Check and clean the filters regularly for best performance.

01 Remove the lower dishwasher rack.

02 Rotate the Cylinder filter counterclockwise a quarter turn and lift up to remove.

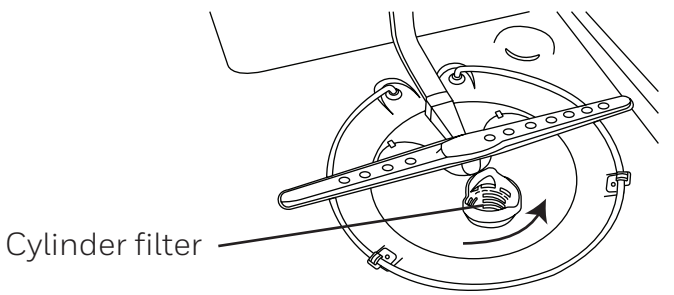

5.1 Cleaning Exterior

03 Empty the Cylinder filter and rinse it under running water.

04 Remove the Fine filter.

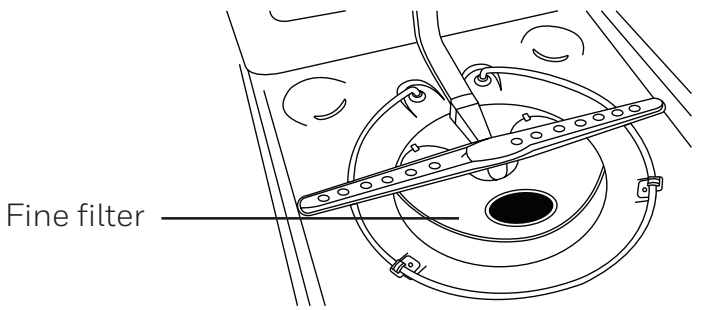

05 Remove the Micro filter from the bottom of the tub.

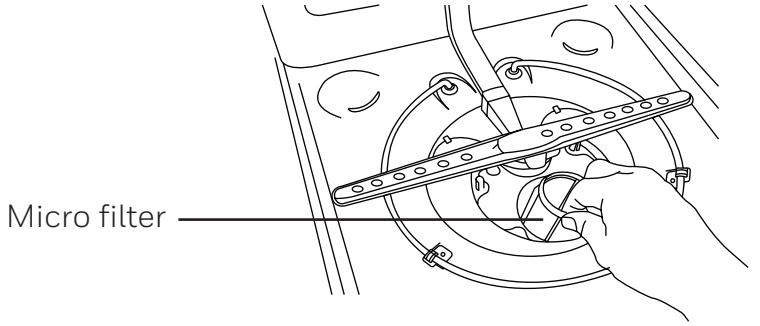

06 Inspect both the Fine filter and the Micro filter for debris, and then clean them by holding the filters under slow running water.

NOTE: A stiff, plastic bristle brush may be needed to remove some debris.

07 Reinstall the filters in reverse order making sure the Cylinder filter locks into place.

DRAIN AIR GAP

Check the drain air gap anytime your dishwasher isn't draining well. Some state or local plumbing codes require the addition of a drain air gap between a built-in dishwasher and the home drain system. If a drain is clogged, a drain air gap prevents water from backing up into the dishwasher.

The drain air gap is usually located on top of the sink or countertop near the dishwasher.

NOTE: The drain air gap is an external plumbing device that is not part of your dishwasher. The warranty provided with your dishwasher does not cover service costs directly associated with the cleaning or repair of the external drain air gap.

5.1 Cleaning Exterior

To Clean the Drain Air Gap:
Clean the drain air gap periodically to ensure proper drainage of your dishwasher. Follow the cleaning instructions provided by the manufacturer.

With most types:

01 Turn off the dishwasher.

02 Lift off the metal cover, and then unscrew the plastic cap.

03 Clean the plastic cap with a toothpick.

6 STORING

6.1 Storing For The Summer

To Clean the Drain Air Gap:
Protect your dishwasher during the summer months by turning off the water supply and power supply to the dishwasher.

Winterizing Your Dishwasher

Protect your dishwasher and home against water damage caused by freezing water lines. If your dishwasher is left in a seasonal dwelling or could be exposed to near freezing temperatures, have your dishwasher winterized by authorized service personnel.

Prepare for Storage:

01 Turn off electrical power to the dishwasher.

02 Turn off the water supply.

03 Place a pan under the inlet valve, and then disconnect the water line from the inlet valve.

04 Disconnect the drain line from the pump and drain water into the pan.

Prepare for Use:

01 Reconnect the water, drain and electrical power supply.

02 Turn on water and electrical power supply.

03 Fill detergent cup and run the dishwasher through a heated wash cycle.

04 Check the connections for leaks.

7 CHECKING THE DISHWASHER

7.1 Pre-Test Checklist

1. Check that the power is OFF.
2. Check door opening and closing. If door does not open and close freely or tends to fall, check spring adjustments. See “Check Door Balance.”
3. Check that wiring is secure under the dishwasher, not pinched or in contact with door springs or other components. See “Position the Water Line and House Wiring.”
4. Check door alignment with tub. If door hits tub, level dishwasher. See “Level Dishwasher.”
5. Pull out the lower rack, about halfway. Check that the rack does not roll back into the dishwasher or forward onto the door. If the rack moves, adjust leveling legs. See “Level the Dishwasher.”
6. Check door alignment with cabinet. If door hits cabinet, reposition or level the dishwasher. See “Level the Dishwasher.”
7. Verify that the water supply and drain lines are not kinked or in contact with other components.
8. Turn on the sink hot water faucet and verify water temperature. Incoming water temperature must be between 120°F and 150°F (49°C and 65°C). A minimum of 120°F (49°C) temperature is required for best wash performance.
9. Add 2 quarts (1.9 L) of water to the bottom of the dishwasher to lubricate the pump seal.
10. Turn on water supply. Check for leaks. Tighten connections if needed.
11. Remove protective film, if present, from the control panel and door.

8 TROUBLESHOOTING

8.1 Dishwasher not operating properly

Problem	Possible Cause	Solution
Dishwasher does not run or stops during a cycle	There is no power to the dishwasher	Replace fuse or reset circuit breaker.
	The door is not closed tightly and latched.	Close and latch the door.
	Most cycles pause for 5 minutes near the start of a cycle to let the dishes soak.	This is normal, and reduces the energy required to clean the dishes.
	Certain cycles repeatedly pause for 15 to 65 seconds during the main wash.	This is normal.
	The Delay feature is selected.	To reset, see “Options” in the Controls section.
Dishwasher does not start a cycle	Control Lock feature is activated.	Deactivate Control Lock. See “Additional Features” in the Controls section.
Dishwasher will not fill	The water shutoff valve is not turned on.	Turn on the water valve.
	The door is not closed tightly and latched.	Close and latch the door.
	Water pressure is too low.	Verify a minimum of 20 psi water pressure is maintained during the filling operation.
Dishwasher seems to run too long	The water supplied to the dishwasher is not hot enough. The dishwasher runs longer while heating water, and a delay automatically occurs in some wash and rinse cycles until the water reaches the proper temperature.	Run the water in the adjacent sink until it gets hot before turning on the dishwasher.
	The Sanitize option is selected.	The cycle time increases to heat the water to the correct temperature for sanitizing.
	The cycle time will vary depending on soil level.	When heavy soil is detected, the Normal cycle will automatically increase the cycle time.
	Dishwasher is connected to the Cold water supply.	Verify the dishwasher is connected correctly to the Hot water supply.
Water remains in the dishwasher **NOTE:** A small amount of clean water around the outlet in the bottom of the tub is normal. It keeps the seal lubricated.	The cycle is not complete or it is in a pause.	The water will drain when the cycle is completed.
	The drain hose is kinked.	Straighten the drain hose.
	The knockout plug is still in the garbage disposal.	Remove the knockout plug.
	Drain hose is connected to the garbage disposal, and the garbage disposal is not empty.	Run the garbage disposal until it is empty.
	Drain is clogged.	Check the air gap.

8.1 Dishwasher not operating properly

Problem	Possible Cause	Solution
Detergent remains in the dispenser	The cycle has not completed.	Close the door and press START to complete cycle.
	The detergent is damp or has clumped.	Remove detergent and replace with fresh dry dishwasher detergent.
	An item was blocking the dispenser.	Remove item. Remove detergent and replace with fresh dry dishwasher detergent.
	The spray arm is blocked.	Load the dishes in a manner that does not block the spray arm from rotating freely.
Grinding, Grating, Crunching, Or Buzzing Sounds	A hard object or powder detergent granules have entered the wash module.	**IMPORTANT:** Clear glass is hard to see in water. and could result in a cut wound. Using care, remove the hard object. If the noise was caused by detergent granules, the noise should stop once the detergent is ground up. **NOTE:** If the noise persists after a complete cycle, call for service.
Beeps	Indicates the wash cycle is completed. **NOTE:** A rapid beep indicates an error condition.	This is normal. See “Error Codes” for further direction.
Suds in the Tub	Used wrong type of detergent.	Use only detergent approved for automatic dishwashers.
Dishwasher Leaks	Excessive suds caused by using improper detergent. Dishwasher is not level.	Use only detergent approved for automatic dishwashers. Level the Dishwasher. See Installation Instructions.
Rinse Aid Light is on	The Rinse Aid level is low.	Add liquid Rinse Aid.

8.2 Dishes Are Not Completely Clean

Problem	Possible Cause	Solution
Food Residue Remains On The Dishes	Dishwasher is not loaded correctly.	See “Dishwasher Loading.”
	The wrong wash cycle for the dish load was selected.	Select the wash cycle based on the most difficult soil in the dishwasher load. If you have some items with heavier soils, use a heavier washing cycle.
	Water temperature is too low.	For best results, the temperature of the incoming water should be a minimum of 120°F (49°C).
	Used incorrect amount of detergent.	Use a minimum of 1 Tbsp. (15 g) detergent per load. Heavy soil and/or hard water generally requires additional detergent.
	Detergent is too old.	Detergent must be fresh to be effective. Store detergent in a cool, dry area.
	Detergent is caked into the dispenser	Do not allow detergent to sit for several hours in a wet dispenser. Clean dispenser and refill with fresh, dry detergent.
	The pump or spray arm is clogged with labels from bottles and cans.	Check pump and spray arm for labels and remove the labels.
	The pressure of the water coming into the home is too low.	Water pressure should be 20 to 80 psi (138 to 552 kPa) for proper dishwasher fill. A booster pump on the water supply can be added if pressure is too low.
	High suds are slowing the wash arm.	Use only detergent recommended for the dishwasher. Do not use soap or laundry detergents.

8.3 Spots And Stains On Dishes

Problem	Possible Cause	Solution
Spotting and filming on dishes	Rinse Aid dispenser is empty.	Add a liquid rinse aid to the dispenser.
	Hard water. High mineral content in your water	Use a rinse aid and keep the dispenser filled to help eliminate spotting and filming. Increase setting on Rinse aid dispenser 1 number per cycle until spotting is eliminated. **NOTE:** If your water hardness is 13 grains (223 ppm) or above, it is strongly recommended that you install a home water softener.
	Water temperature is too low.	For best results, water should be a minimum 120°F (49°C) as it enters the dishwasher.
	Did not use enough detergent.	Use a minimum of 1 Tbsp. (15 g) of detergent per load. Heavy soil and/or hard water generally require extra detergent.
	Detergent is too old.	Detergent must be fresh and dry to be effective. Store detergent in a cool, dry area.
	Home water pressure is too low to fill dishwasher properly.	Water pressure to the home should be 20 to 80 psi (138 to 552 kPa) for proper dishwasher fill. A booster pump on the water supply can be added if pressure is too low.
Silica film or Etching	Using too much detergent	If you have soft water use less detergent, but do not use less than 1 Tbsp. (15 g) per load.
	The inlet water temperature exceeds 150°F (65°”C).	Lower the incoming water temperature.
Black Or Gray Marks On Dishes	Aluminum items rubbing dishes during washing. Disposable aluminum items can break down in the dishwasher and cause marking.	Hand wash aluminum items. Remove aluminum markings by using a mild abrasive cleaner.
Orange stains on plastic dishes or dishwasher interior	Large amounts of tomato-based foods on dishes placed in the dishwasher.	Use a stain removal product to remove stains from your dishwasher. Stains will not affect dishwasher performance.

8.4 Dishes Do Not Dry Completely

Problem	Possible Cause	Solution
Dishes Are Not Completely Dry **NOTE:** Plastics often need towel drying.	Dishes are not loaded properly to allow water drainage.	Do not overload dishwasher. Place glasses and cups in the rack so that the bottom surface is slanted to allow water to run off.
	Rinse Aid not used or dispenser is empty.	Use a liquid rinse aid to speed drying and keep the dispenser full.
	Used an air dry or energy-saving option.	For dryer dishes, select a Cycle that allows a Heated dry option.

8.5 Dishes Are Damaged During A Cycle

Problem	Possible Cause	Solution
Dishes are chipped **NOTE:** Some types of china and glassware might be too delicate for automatic dish washing. Wash by hand.	Dishes not loaded properly.	Load the dishes and glasses so they are stable and will not strike together from washing action.
	Moving the rack in or out of the dishwasher too quickly.	Minimize chipping by moving the rack in and out slowly.

8.6 Error Codes

Code	Meaning	Possible Cause	Possible Solution
E1	Either the water flow is insufficient or the water pressure from the incoming flow is too high	Faucet is not opened Water pressure is too low The drain hose is plugged. Other (parts failure of inlet or drain system).	Make sure that the water is turned on to the dishwasher. Make sure that the water pressure is 20~100 psi. Check the drain hose. Contact Customer Service.
E2	Tub water level is too high	The drain hose is plugged. Other (parts failure of inlet or drain system).	Check the drain hose. Contact Customer Service.
E4	Overflow or leak sensor activated	A leak	Turn off water to the dishwasher, then check the filter system for blockage. Unblock if necessary.
		Too much water in the tub	If there is no water in the tub, contact Customer Service
ED	Communication or exception issues	The display board can't receive or the main board can't send a signal for over 20 seconds	Contact Customer Service.



LIMITED WARRANTY

Models included are:
H101TFS, H16MRB, H16MRS, H33MRB, H33MRS, H31MRS, H31MRB, H11MFW, H11MFB, H11MFS, H17UFW, H17UFS, H35CFW, H5CFW, H7CFW, H14WCB, H24WCB, H34WCB, H52WCS, H48BCS, H115BCS, H4MFSS, HDS18SS, HDS24SS, HDS24SS-H, HCTDS1W, HCTDS2W, HAC5, HAC5-B, HAC6, HAC6-B, HAC8, HAC8-B, HAC10, HAC10-B, HAC12, HAC12-B, HAC14, HAC12-B, HAC-U8, HAC-U8-B, HAC-U10, HAC-U10-B, HAC-U12-W, HAC-U12-B, H3UFW, H3UFB, H3UFS, HAC-8I, H7WCS, H36WCS, H46WCS, H56WCS, H154WCS, H165WCS, H174WCS, H186WCS, H46WCS1, H7WCS-B, H36WCS-B, H46WCS-B, H46WCS-1B, H56WCS-B, H154WCS-B, H165WCS-B, H174WCS-B, H186WCS-B, H-ICE, H-ICE2

Products listed above are covered by the terms of this Limited Warranty. For purposes of this Limited Warranty,

the term “product” means any appliance manufactured for BHRS Group. BHRS Group warrants that it will, at BHRS Group’s option, replace or repair the Purchaser’s BHRS Group product sold in the U.S. or Canada by an authorized retailer if that product is defective due to faulty workmanship or materials, subject to the limitations described in this Limited Warranty. BHRS Group undertakes no responsibility for the quality of the goods except as otherwise provided in this warranty. There are no warranties that extend beyond the description on the face hereof. This Limited Warranty is valid only in connection with the original purchase of new products from authorized retailers and extends from the original purchase date of the original product purchased. This warranty extends only to the original purchaser of the product and lasts for one (1) year from the date of the original purchase or until the original purchaser of the product sells or transfers the product, whichever fi st occurs. An “original purchaser,” for the purposes of this Limited Warranty, is an individual or entity who purchases the product directly from BHRS Group or an authorized retailer of BHRS Group with the intent to use the product for personal consumer use and commercial or industrial use and not with the intent to resell the product. An “authorized retailer,” for purposes of this Limited Warranty, is an individual or entity authorized by BHRS Group to sell the product directly to original purchasers.

An individual or entity that purchases the product from whatever source with the intent to resell the product is an unauthorized reseller (“unauthorized reseller”). For the purpose of this Limited Warranty a “Third Party” would be considered any plumber, maintenance company, or individual hired by the Purchaser.

This Limited Warranty does not apply to used, refurbished, renewed, floor model or “demo” products, or to products sold by unauthorized resellers, including without limitation, unauthorized resellers on third party websites, including, without limitation, Craigslist, eBay, Amazon, etc. Unauthorized resellers are not “original purchasers” for the purpose of this Limited Warranty. If the purchaser is not the original purchaser of this product, the purchaser takes the product “AS IS,” “with all faults” and without warranty. BHRS Group reserves the right to require a valid serial number located on your product to submit a valid claim under this Limited Warranty. Products where the serial number has been removed or evidence showing the removal or attempted removal of the serial number label will not be eligible to make a claim under this Limited Warranty. IF THE PURCHASE OF THIS PRODUCT WAS NOT DIRECTLY FROM BHRS GROUP, PROOF OF PURCHASE WILL BE REQUIRED TO DEMONSTRATE THAT PURCHASER IS THE ORIGINAL PURCHASER AND THE PRODUCT WAS PURCHASED FROM AN AUTHORIZED RETAILER, AND ELIGIBLE TO MAKE A VALID CLAIM UNDER THIS LIMITED WARRANTY. Your purchase date is established from the date of your sales receipt. BHRS Group may require the purchaser to provide proof of the quality and condition of the appliance if the purchaser makes a claim under this Limited Warranty. BHRS Group reserves the right to invalidate this Limited Warranty if the appliance is determined, in BHRS Group’s reasonable discretion, to be inadequate or if the appliance is found to be in an unsanitary condition. This warranty does not apply if the product was damaged or failed because of accident, improper handling or operation, relocation, abuse, misuse, unauthorized repairs made or attempted, or improper installation or maintenance. Under this Limited Warranty, products are required to be plugged directly into a grounded wall outlet. Plugging a product into an extension cord or surge protector will be considered misuse and will void this Limited Warranty. If damage to the product has occurred during shipping, the damage must be reported to BHRS Group within the first 30 days from the original purchase date to be eligible to make a claim under the Limited Warranty. Shipping damage reported to BHRS Group outside of the fi st 30 days from the original purchase date will not be eligible for a valid

claim under this Limited Warranty. This warranty does not cover shipping costs for the return of products to BHRS Group for repair or replacement.

To submit a valid claim under this Limited Warranty, troubleshooting the product with a BHRS Group Customer Success Expert is required. If troubleshooting the product is refused by the Purchaser, BHRS Group reserves the right to deny the Limited Warranty Claim. In the event a part is necessary to correct the problem with a Product, BHRS Group will provide the part at no cost to the original purchaser under this Limited Warranty. Replacing parts or attempting to correct an issue with the Product is required prior to submitting a claim for a replacement product under this Limited Warranty. Instructions for troubleshooting a Product or replacing a part will be provided by BHRS Group. Troubleshooting, repairs, part replacement, installation, and proper maintenance are the responsibility of the Purchaser. Instructions for proper installation and maintenance will be provided in the user manual.

Installation, maintenance, or repairs of the Product is the responsibility of the Purchaser. The Purchaser reserves the right to use a Third Party for installation, maintenance, and repair at their own risk. BHRS Group is not responsible for any additional cost incurred for installation, maintenance, or repair of the Product including but not limited to additional material needed for installation or the cost of a Third Party. Damage or failure of the Product due to improper installation, maintenance, or repair caused by a Third Party or the Purchaser is not the responsibility of BHRS Group and will not be covered under this Limited Warranty. Instructions for proper installation and maintenance will be provided in the user manual.

ANY AND ALL WARRANTIES, EXPRESSED OR IMPLIED (INCLUDING, WITHOUT LIMITATION, ANY IMPLIED WARRANTY OF MERCHANTABILITY), LAST ONE YEAR FROM THE DATE OF ORIGINAL PURCHASE OR UNTIL THE ORIGINAL PURCHASER OF THE PRODUCT SELLS OR TRANSFERS THE PRODUCT, WHICHEVER FIRST OCCURS. IN NO EVENT SHALL BHRS GROUP'S LIABILITY UNDER ANY EXPRESS OR IMPLIED WARRANTY INCLUDE (I) INCIDENTAL OR CONSEQUENTIAL DAMAGES FROM ANY CAUSE WHATSOEVER, INCLUDING BUT NOT LIMITED TO ELECTRICAL OR WATER DAMAGE, OR (II) REPLACEMENT OR REPAIR OF ANY HOUSE FUSES, CIRCUIT BREAKERS OR RECEPTACLES. NOTWITHSTANDING ANYTHING TO THE CONTRARY, IN NO EVENT SHALL BHRS GROUP'S LIABILITY UNDER ANY EXPRESS OR IMPLIED WARRANTY EXCEED THE PURCHASE PRICE OF THE PRODUCT AND ANY SUCH LIABILITY SHALL TERMINATE UPON THE EXPIRATION OF THE WARRANTY PERIOD.

Except as otherwise provided, BHRS Group will not charge Original Purchaser to repair or replace the purchaser's Product if it is deemed defective during the length of this Limited Warranty, but any transportation costs associated with repairs or replacements are Purchaser's responsibility. No new warranty is provided with a replacement product. The warranty for the replacement product runs from the date of the original purchase of the original product. In the event that repair is necessary, such repair will be at no charge to the Purchaser except for transportation costs associated with such repair or replacement of a product in compliance with the terms of this Limited Warranty.

In the event, a warranty claim is filed and a warranty replacement is deemed necessary, the purchaser will be required to surrender the original product to BHRS Group at the time of replacement. Some states and provinces do not allow limitations on how long an implied warranty lasts or the exclusion or limitation of incidental or consequential damages, so these exclusions or limitations may not apply to you. This warranty gives you specific legal rights. You may also have other rights which vary from state to state and province to province.

If you want to return or replace the product, please contact the store where it was purchased (remember to bring the purchase invoice). If your product needs repair, please contact us via email or phone.

If you want to return or replace the product, please contact the store where it was purchased (remember to bring the purchase invoice). If your product needs repair, please contact us via email or phone.

BHRS Group, LLC
585 Prospect St.
Lakewood, NJ 08701

Customer Service Tel: 1-888-604-0295
Customer Service Email: support@honeywellcoolingappliances.com
Website: honeywellcoolingappliances.com

©2025 BHRS Group, LLC. All Rights Reserved.

The Honeywell Trademark is used under license from Honeywell International Inc. Honeywell International Inc. makes no representations or warranties with respect to this product. This product is manufactured by BHRS Group, LLC.

MADE IN CHINA

Honeywell