INNOTRIK

lavalier microphone speaker

Model: I-18

User Manual

Shenzhen Innotrik Technology Co., Ltd.
http://www.innotrik.com

Product introduction

Host :

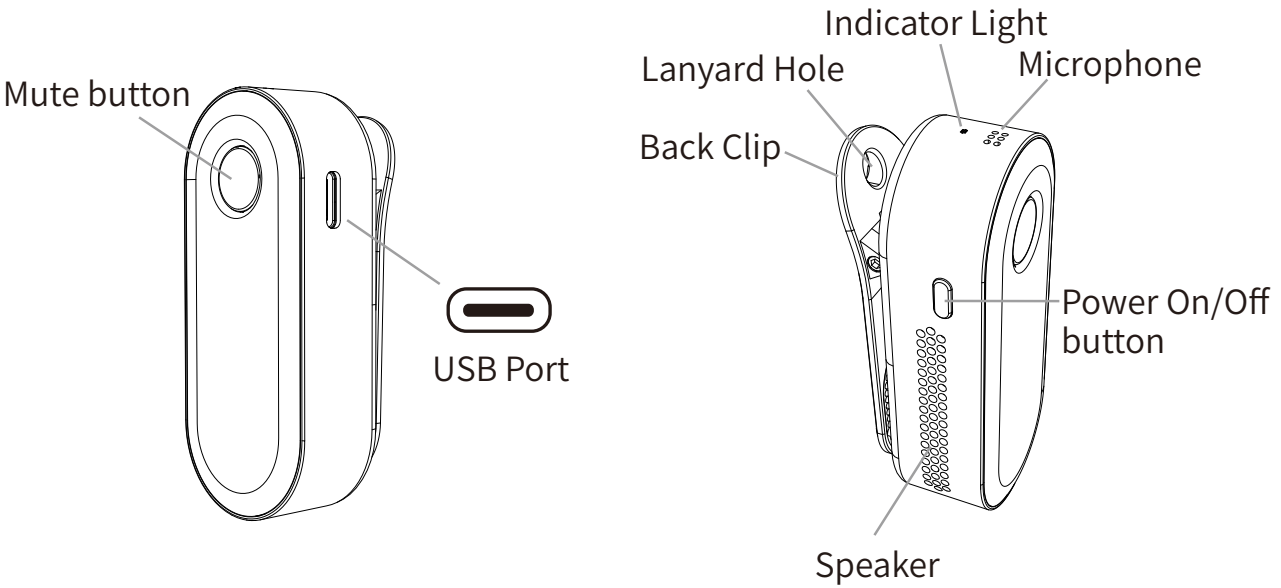

Package list

Host × 1

USB Cable × 1

Manual × 1

Indicator light instructions

Microphone muted: Red light always on.
Microphone resumes pickup: Red light off.
Wireless connection normal: blue light always on.
Standby, USB connection, Wireless not connected: blue light flashes.
Charging when powered off: The blue breathing light flashes slowly, and the blue light turns off when fully charged.

Charging

When using it for the first time, the battery needs to be fully charged.
If the host prompts low battery, please charge it in time.

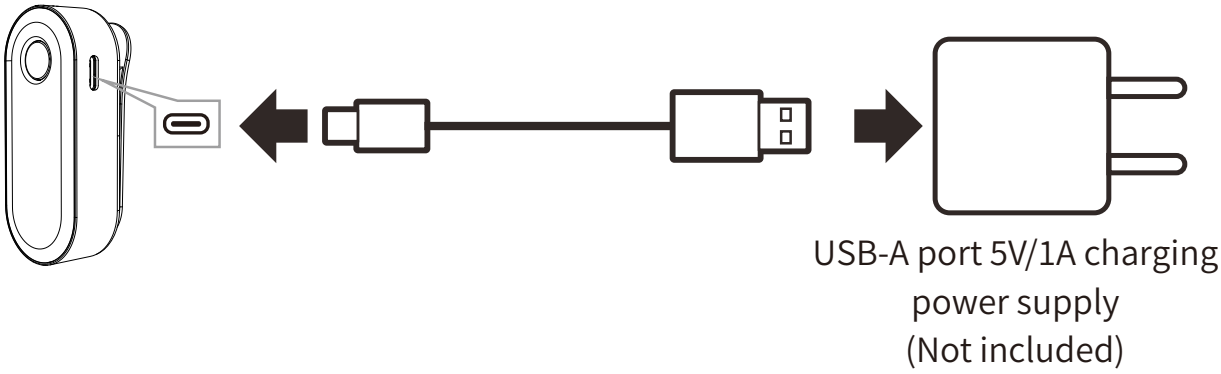

Wireless connection usage

Wireless pairing connection and disconnection

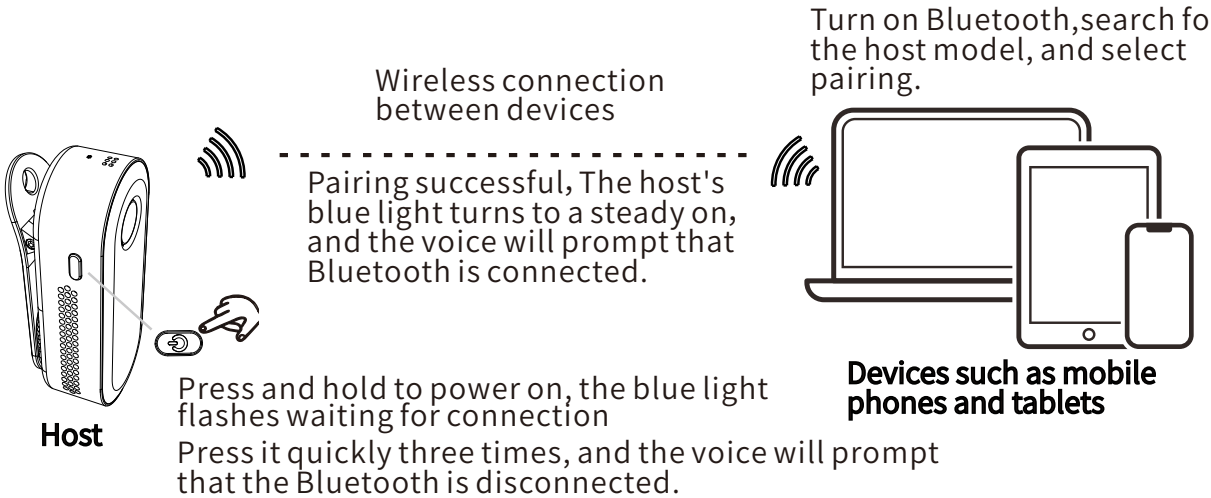

USB connection usage

Turn on the device, insert the USB cable into both ends, and there will be a voice prompt USB connected.

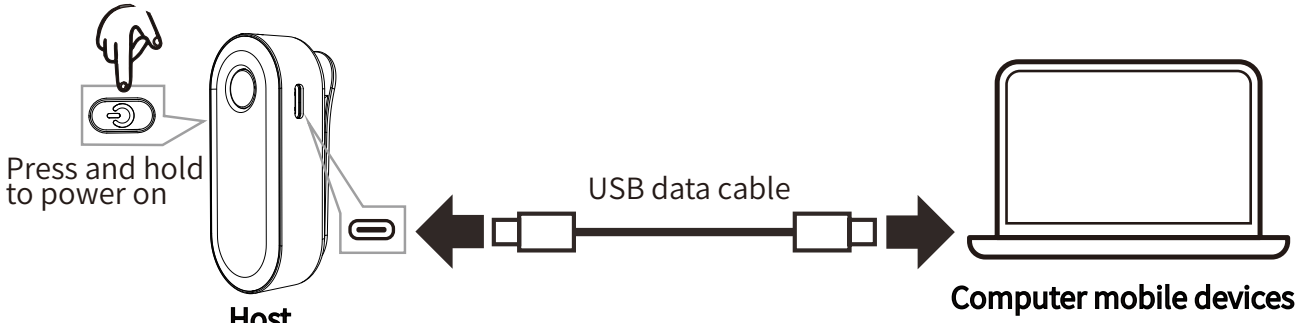

Function operation

Power on and power off:
Long press the power button to power on, the host indicator blue light will flash; long press this button again to power off.
Wireless pairing connection and disconnection:
The host's blue light flashes waiting, turn on the phone's Bluetooth, search for the host model, click to connect successfully, and the blue light will turn to steady on; Quickly press the power button 3 times to disconnect the current wireless connection.
USB wired connection:
When the device is powered on, plug in the USB cable between devices, it is plug-and-play, and it will prompt that the connection is successful.
Used as an external microphone and speaker:
Answer incoming calls by pressing the answer key on your phone.
Reject incoming calls by pressing the reject key on your phone.
End ongoing calls by pressing the hang-up key on your phone.
To adjust the speaker volume, press the volume up key on devices such as mobile phones and tablets to gradually increase the volume.
Press the volume down key on the mobile phone to gradually decrease the volume.
Microphone mute:
Press the microphone mute button, the indicator red light will turn on, indicating that the microphone is muted; press this button again, the red light will go off, and the microphone will resume picking up sound.
Note: The host device will automatically power off after 10 minutes if there is no connection (Bluetooth or USB).
Scan the QR code to download the APP and experience its rich language functions:
Once your phone and host are connected, scan the QR code to install the app and begin your intelligent language learning journey, learning new languages anytime, anywhere.

Wearing and clipping methods

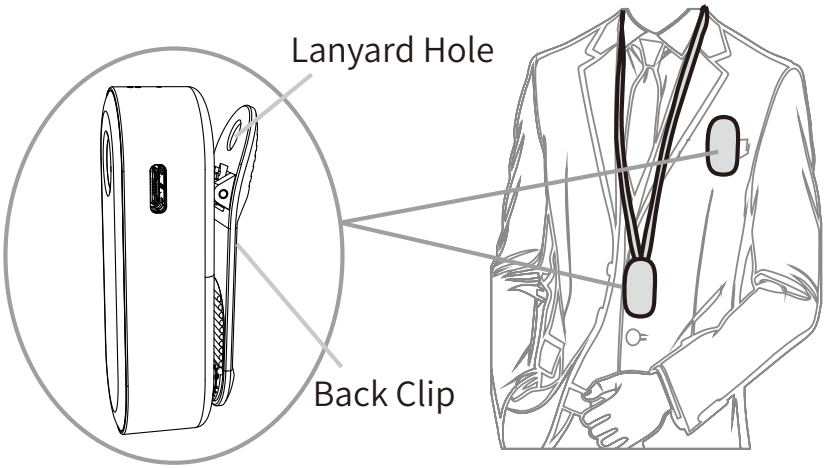

Download the APP, register and use it.

Choose a device suitable for you, such as a mobile phone. Open WeChat, scan the QR code on the right, and you will be prompted to download the corresponding APP application to begin your intelligent language learning journey, learn new languages anytime and anywhere.

Basic parameters

Operating environment: 0°C to 44°C
Storage environment: -10°C to 55°C
Humidity environment: 20% to 85% (no condensation)
Host size: 69*29*29mm (including back clip)
Host weight: about 52 grams
USB interface: version 2.0 and above
Rated Input: DC 5V 500mA
Wireless transmission distance: up to 10 meters
Battery Life: up to 7~8 hours
Built-in Battery: rated capacity 500mAh
Wireless Working Frequency: 2.4G frequency band
Audio Features: 360° intelligent sound pickup, echo cancellation, dynamic noise reduction, automatic gain control, full-duplex communication

Safety information

This product contains a built-in rechargeable lithium battery. Battery safety warning: Do not disassemble, impact, squeeze, or throw into fire!

This product must not be submerged in water or other liquids.

The USB adapter used to charge the main unit must have a 3C certification mark or a national/regional safety certification.

If the main unit's built-in battery is not used for a long time, it is recommended to charge and discharge it once every three months to maintain a stable battery level.

Warranty card

First of all, thank you for using the products of Shenzhen Innotrik Technology Co., Ltd. (hereinafter referred to as "we"). In order to make our service more satisfactory to you, please read this notice carefully after purchasing the product and keep this warranty card properly.

Friendly reminder: To protect your rights, please fill out the form carefully and keep it safe as a repair receipt.

Purchase Information

User Name _____

Postal Code _____

Contact Number _____

Contact Address _____

Product Model _____

Product Number _____

Purchase Date _____

Invoice Number _____

Dealer Name _____

Repair Record

Repair Date _____

Fault Description _____

Solution _____

Repairman _____

Note：

1.This warranty card must be filled out completely and stamped by the final direct dealer. We will not be responsible for warranty service if it is not stamped.
2.If you use the product correctly according to the instruction manual and a quality issue arises during the warranty period, you can enjoy free repair services by presenting this warranty card and valid proof of purchase (such as the purchase invoice). If the warranty period has expired, you can still enjoy paid repair services provided by us.
3.We promise to provide a free warranty for the products sold for one year from the date of sale. If the contract you signed with us is inconsistent with the above-mentioned warranty period, the warranty period stated in the signed contract shall prevail.
4.If you encounter any problems with the product you purchased, please contact your dealer for after-sales service.

We will not provide free warranty service in the following circumstances:

A.Product damage caused by violating the usage instructions in the product manual.
B.Hardware damage caused by improper assembly.
C.Product damage caused by unauthorized modifications or self-repair.
D.Product damage caused by exceeding the allowed usage or storage environment.
E.Product damage caused by abnormal external forces.
F.Product damage caused by natural disasters or other force majeure events.
G.Unable to provide this warranty card and valid proof of purchase.
H.Unauthorized removal or damage of the disassembly label.
I.Other situations not covered by the free warranty.

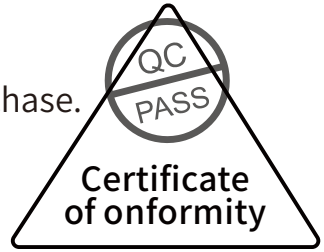

* The above warranty information is subject to change at any time. Please refer to the official website for the latest warranty policy.

For all repair services, please contact qualified service personnel. If the equipment malfunctions, please call customer service at 4000-779-663 to report the problem. Unauthorized disassembly and repair are strictly prohibited.

INNOTRIK

Manufacturer: Shenzhen Innotrik Technology Co., Ltd.
Add: Floor 2nd and 3rd, Building A, Baoshi Technology Park, Baoshi Road, Tangtou Community, Shiyan Street, Baoan District, Shenzhen.
PC: 518108
Tel: +86-755-29768511
Web: http://www.innotrik.com

FCC Warnning:

This equipment has been tested and found to comply with the limits for a Class B digital device,pursuant to part 15 of the FCC Rules. These limits are designed to provide reasonable protection against harmful interference in a residential installation. This equipment generates, uses and can radiate radio frequency energy and, if not installed and used in accordance with the instructions, may cause harmful interference to radio communications. However, there is no guarantee that interference will not occur in a particular installation. If this equipment does cause harmful interference to radio or television reception, which can be determined by turning the equipment off and on, the user is encouraged to try to correct the interference by one or more of the following measures:

• Reorient or relocate the receiving antenna.
• Increase the separation between the equipment and receiver.
• Connect the equipment into an outlet on a circuit different from that to which the receiver is connected.
• Consult the dealer or an experienced radio/TV technician for help.

Caution: Any changes or modifications to this device not explicitly approved by manufacturer could void your authority to operate this equipment.

This device complies with part 15 of the FCC Rules. Operation is subject to the following two conditions:

(1)This device may not cause harmful interference, and (2) this device must accept any interference received, including interference that may cause undesired operation.

This equipment complies with FCC radiation exposure limits set forth for an uncontrolled environment. This equipment should be installed and operated with minimum distance 0cm between the radiator and your body.

ISED Statement

- English: This device contains licence-exempt transmitter(s)/receiver(s) that comply with Innovation Science and Economic Development Canada’s licence-exempt RSS(s). Operation is subject to the following two conditions:
(1) This device may not cause interference.
(2) This device must accept any interference, including interference that may cause undesired operation of the device.
- French:Cet appareil contient des émetteurs/récepteurs exempts de licence qui sont conformes aux CNR exempts de licence d’Innovation, Sciences et Développement économique Canada. Le fonctionnement est soumis aux deux conditions suivantes :
(1) Cet appareil ne doit pas causer d’interférences.
(2) Cet appareil doit accepter toute interférence, y compris les interférences susceptibles de provoquer un fonctionnement indésirable de l’appareil.
This equipment complies with Canada radiation exposure limits set forth for an uncontrolled environment.
This equipment should be installed and operated with minimum distance 0cm between the radiator & your body.
Cet équipement est conforme Canada limites d'exposition aux radiations dans un environnement non contrôlé.
Cet équipement doit être installé et utilisé avec une distance minimale de 0 cm entre le radiateur et votre corps.