Bruksanvisning

Snow blade

966 83 30-01

Läs anvisningen noga innan produkten används

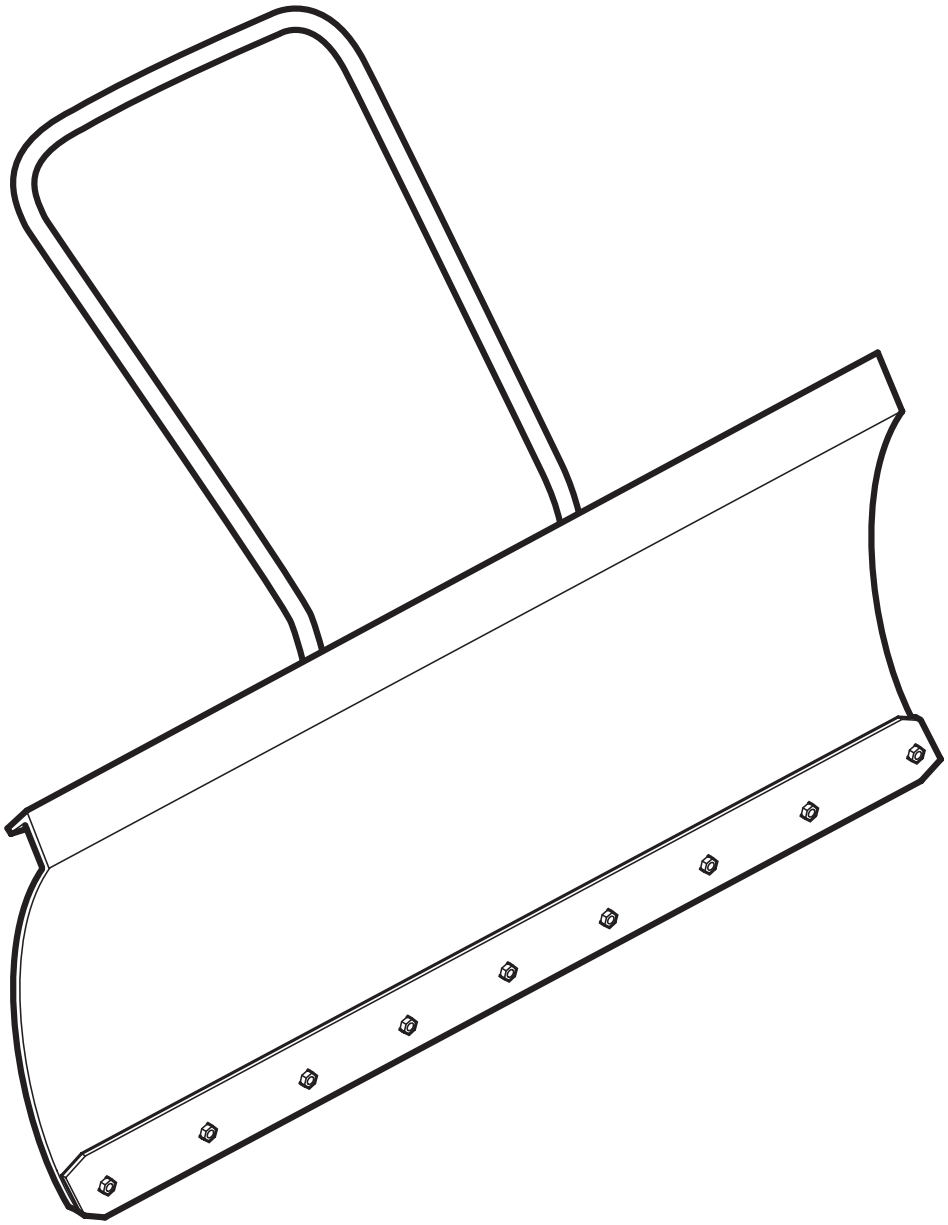

966 83 30-01
114 35 72-38

P. Olssons i Linderöd AB




2.


3.

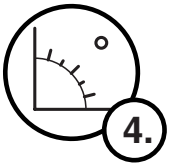
4.


5.


6.


6.


7.



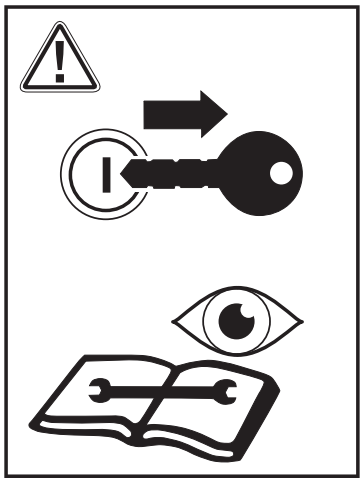

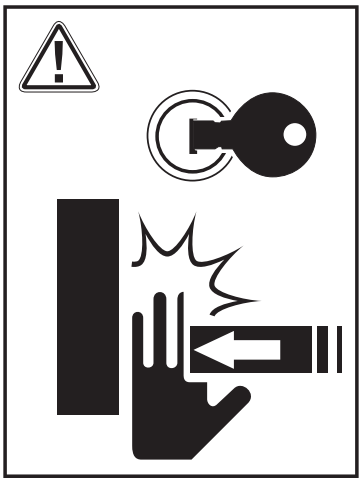

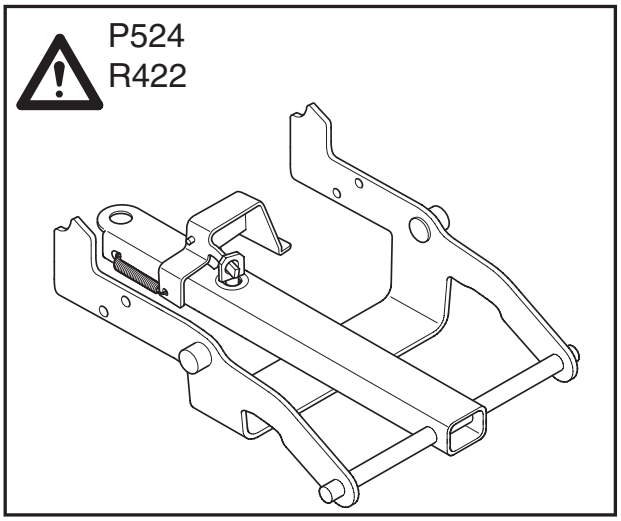
P524
R422

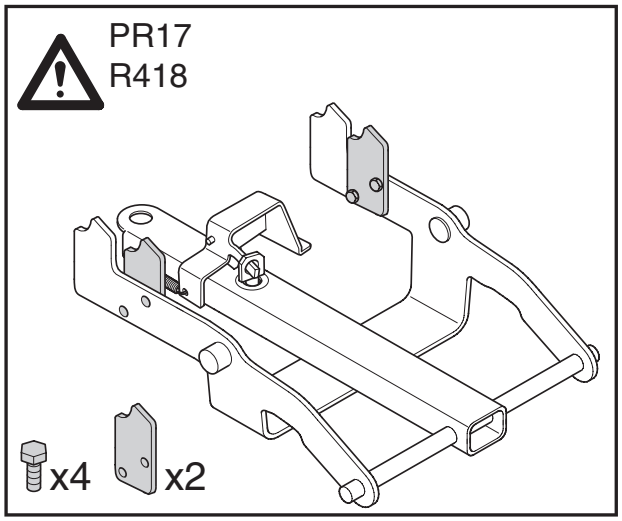
PR17
R418
x4
x2

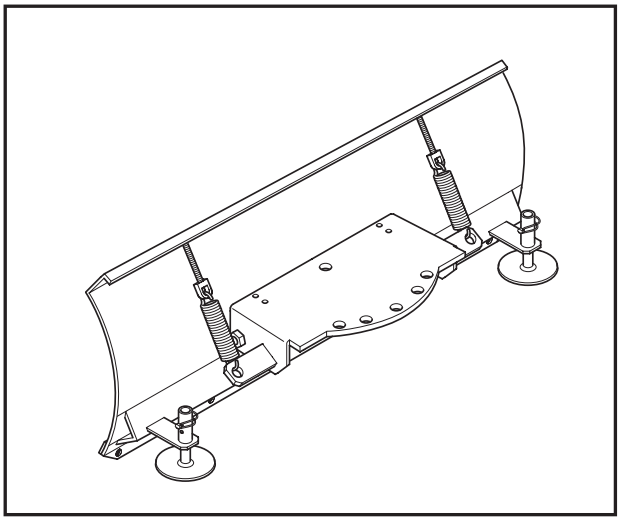

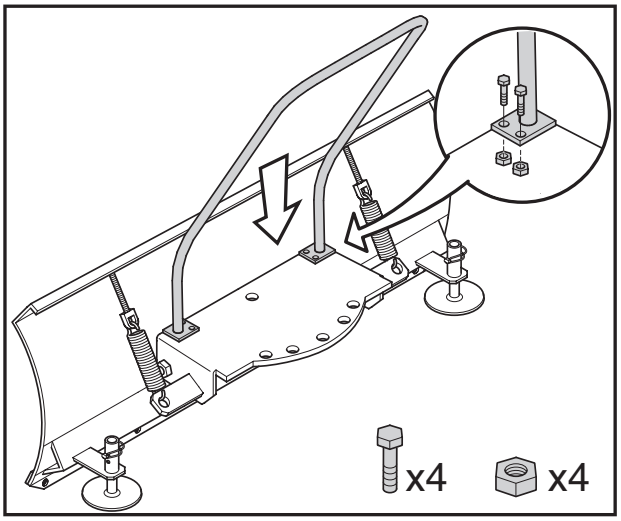
x4
x4

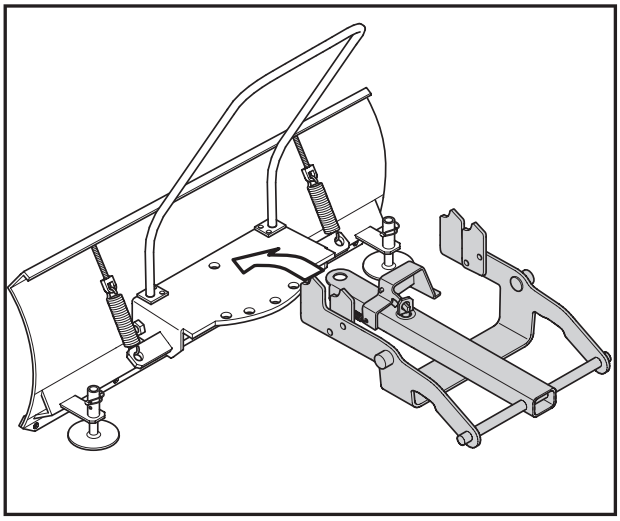

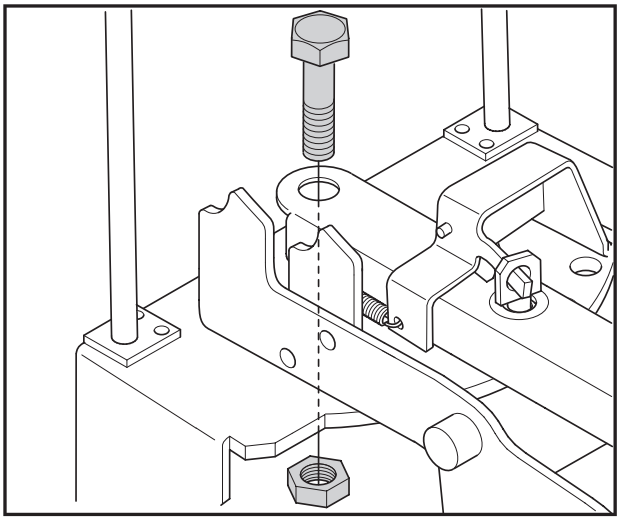

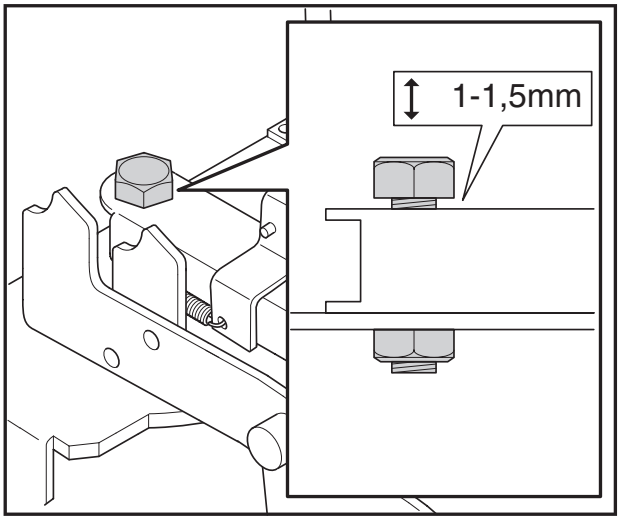
1-1,5mm

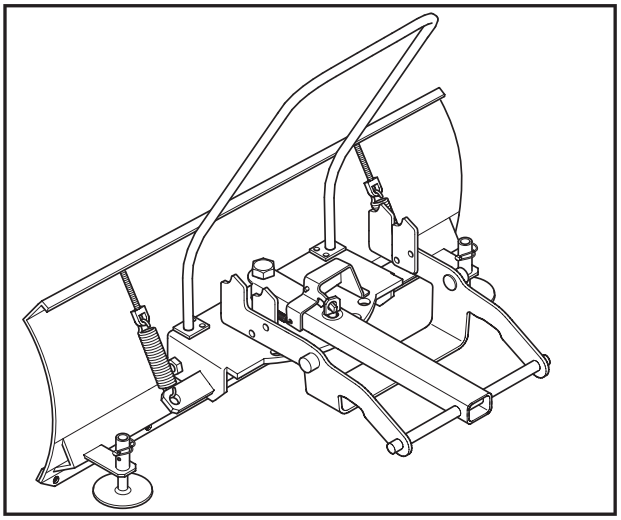

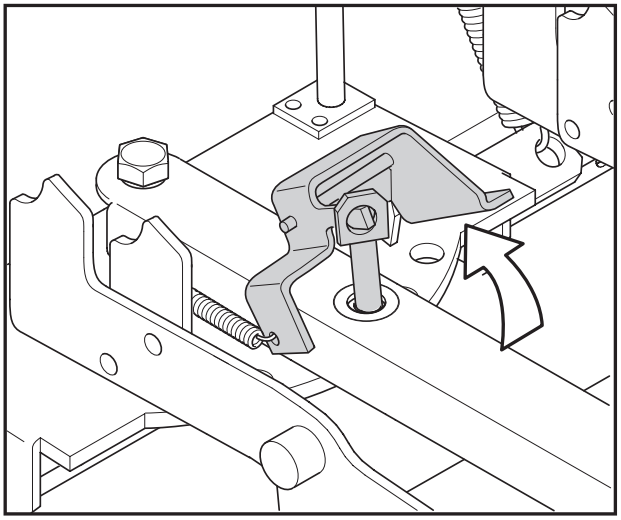

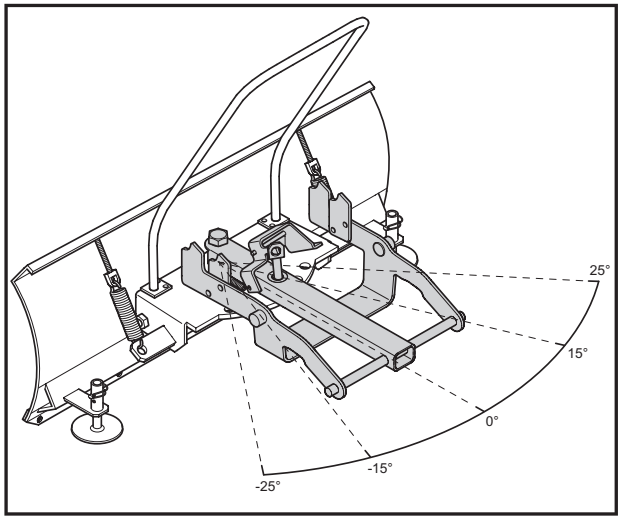
25°
15°
0°
-15°
-25°

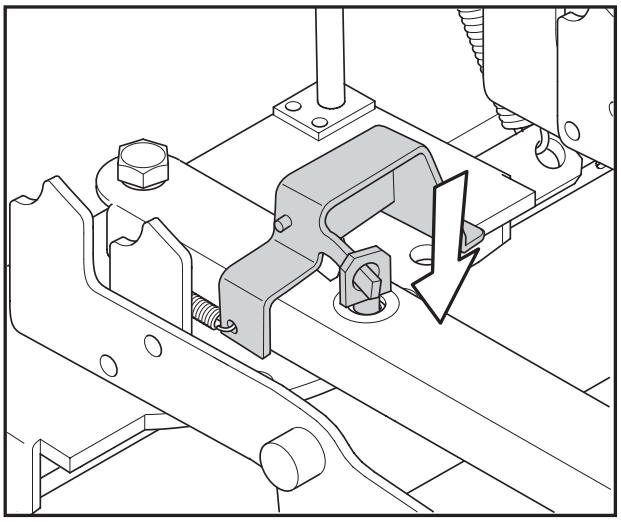

65/75 kg

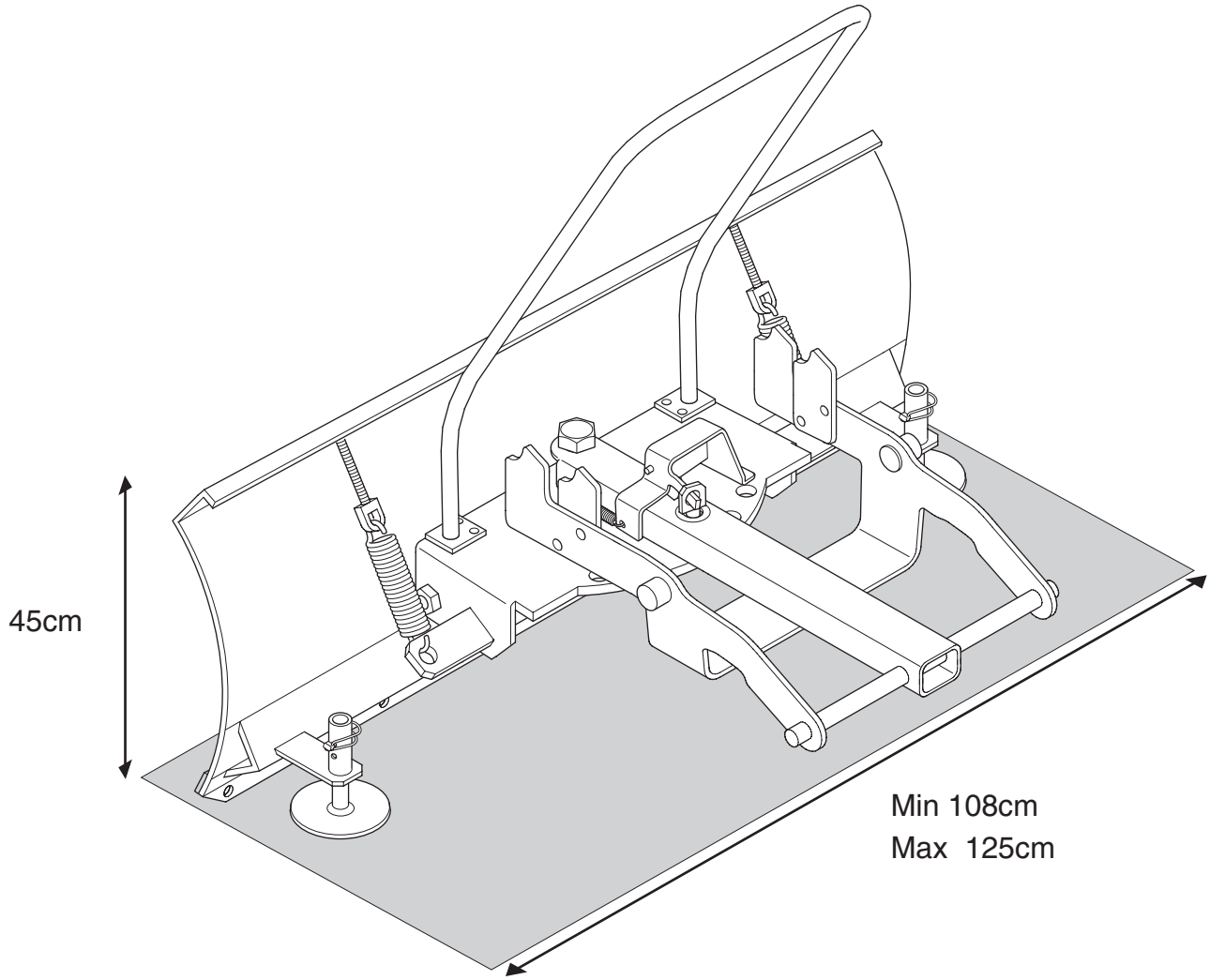

± 15° / 25°

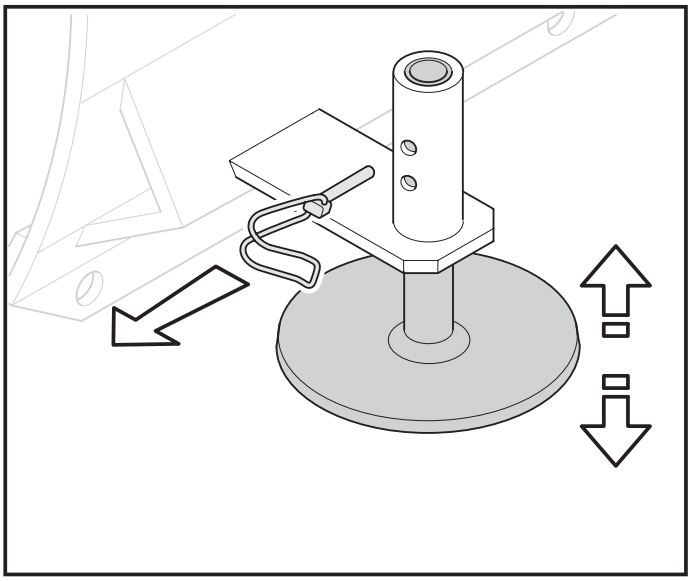

Declaration of conformity

We – P Olssons i Linderöd AB , Steglitsvägen 6 , 291 67 Fjälkinge , Sweden

+46 44 340011 , info@polssons.se

declare that the product

Type	Plough
Model	LBL 125
Part nr.	966 83 30-01

Complies with EN 13021 and A1:2008 (the supply of Machinery 2008)



_____

Ola Olsson

P Olsson i Linderöd AB

Steglitsvägen 6

291 67 Fjälkinge

SWEDEN

UK Importer:
Husqvarna UK Ltd
Preston Road, Co. Durham
DL5 6UP


FR