Installation Manual

Installation and Appliance Setup

***CAUTION! Risk of Fire! DO NOT** store instruction manuals inside fireplace cavity. High temperatures could cause a fire.*

INSTALLER: Leave this manual with the appliance, not inside the appliance.
CONSUMER: Retain this manual for future reference. Do not store inside the appliance.

***NOTICE: DO NOT** discard this manual!*

MAJESTIC

GAS-FIRED

C UL US

LISTED

Models:

QUARTZPLA36IN
QUARTZPLA36IL

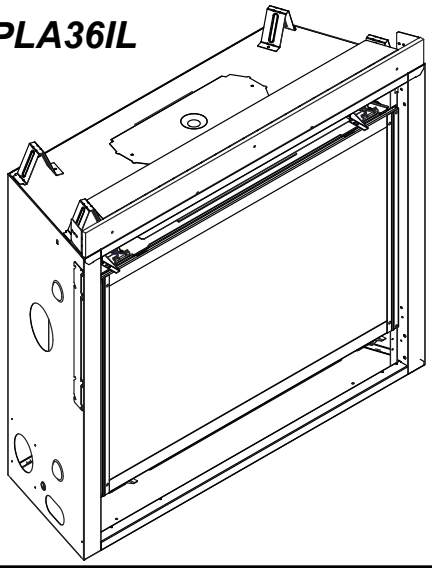

This appliance may be installed as an OEM installation in manufactured home (USA only) or mobile home and must be installed in accordance with the manufacturer's instructions and the *Manufactured Home Construction and Safety Standard, Title 24 CFR, Part 3280* in the United States, or the *Standard for Installation in Mobile Homes, CAN/CSA Z240 MH Series,* in Canada.

This appliance is only for use with the type(s) of gas indicated on the rating plate. This appliance is not convertible for use with other gases, unless a certified kit is used.

⚠ WARNING:
FIRE OR EXPLOSION HAZARD
Failure to follow safety warnings exactly could result in serious injury, death, or property damage.

- **DO NOT** store or use gasoline or other flammable vapors and liquids in the vicinity of this or any other appliance.
- **What to do if you smell gas**
  - **DO NOT** try to light any appliance.
  - **DO NOT** touch any electrical switch. **DO NOT** use any phone in your building.
  - Leave the building immediately.
  - Immediately call your gas supplier from a neighbor's phone. Follow the gas supplier's instructions.
  - If you cannot reach your gas supplier, call the fire department.
- Installation and service must be performed by a qualified installer, service agency, or the gas supplier.

⚠ DANGER

HOT GLASS WILL CAUSE BURNS.

DO NOT TOUCH GLASS UNTIL COOLED.

NEVER ALLOW CHILDREN TO TOUCH GLASS.

A barrier designed to reduce the risk of burns from the hot viewing glass is provided with this appliance and must be installed for the protection of children and other at-risk individuals.

Decorative barrier front must be ordered separately at time of appliance purchase. See Section 3.B.

⚠ Safety Alert Key:

- ***DANGER!*** *Indicates a hazardous situation which, if not avoided will result in death or serious injury.*
- ***WARNING!*** *Indicates a hazardous situation which, if not avoided could result in death or serious injury.*
- ***CAUTION!*** *Indicates a hazardous situation which, if not avoided, could result in minor or moderate injury.*
- ***NOTICE:*** *Used to address practices not related to personal injury.*

Note: *The term "recommend" or "recommended" does not indicate a requirement. It is a best practice suggested by Hearth & Home Technologies®.*

Table of Contents

Installation Standard Work Checklist 3

1 Product Specific and Important Safety Information

A. Appliance Certification 4
B. Glass Specifications 4
C. BTU Specifications 4
D. High Altitude Installations 4
E. Non-Combustible Materials Specification 4
F. Combustible Materials Specification 4
G. Electrical Codes 4
H. California 4
I. Requirements for the Commonwealth of Massachusetts . . 5

2 Getting Started

A. Design and Installation Considerations 6
B. Good Faith Wall Surface/TV Guidelines 6
C. Tools and Supplies Needed 8
D. Inspect Appliance and Components 8

3 Framing and Clearances

A. Appliance Weights and Dimensions 9
B. Decorative Barrier Front Dimensions 10
C. Appliance Location and Clearances to Combustibles . . . 12
D. Constructing the Appliance Chase 14
E. Vinyl Flooring 15

4 Termination Location and Vent Information

A. Approved Pipe 16
B. Vent Termination Minimum Clearances 16
C. Vent Terminal Clearances 18
D. Use of Elbows 19
E. Use of Flex Vent (SLP-FLEX Series 6-5/8 Inch) 20
F. Vent Diagrams 21

5 Vent Clearances and Vent Framing

A. Vent Clearances to Combustibles 35
B. Wall Penetration Framing/Firestops 36
C. Ceiling Firestop/Floor Penetration Framing 37
D. Install Attic Insulation Shield 37

6 Appliance Preparation

A. Vent Collar Preparation 38
B. Prepare For Heat Management 40
C. Securing and Leveling the Appliance 40
D. Non-Combustible Material (Factory-Installed) 41

7 Venting

A. Assemble Vent Sections 42
B. Assemble Slip Sections 45
C. Secure the Vent Sections 46
D. Disassemble Vent Sections 46
E. Vertical Termination Requirements 47
F. Horizontal Termination Requirements 48

8 Electrical Information ➔

A. General Information 50
B. Wiring Requirements 52

9 Gas Information

A. Fuel Conversion 53
B. Gas Pressure 53
C. Gas Connection 53
D. High Altitude Installations 53
E. Air Shutter Setting 54
F. Burner Identification/Verification 55

10 Finishing

A. Facing Material 56
B. Installing a Television 57
C. Mantel and Wall Projections 57
D. Decorative Barrier Front Dimensions for Finishing 60

11 Appliance Setup

A. Remove the Shipping Materials 61
B. Clean the Appliance 61
C. Install the Refractory Kit (Required) 61
D. Install and Paint Teco-Sil 61
E. Install the Log Assembly (Including Glowing Embers and Lava Rock) 62
F. IntelliFire Touch® Control System Setup 65
G. Fixed Glass Assembly Removal and Replacement 65
H. Install Decorative Barrier Front 66

12 Reference Materials

A. Vent Components Diagrams 67
B. Accessories 79

➔ = Contains updated information.

Installation Standard Work Checklist

ATTENTION INSTALLER:

Follow this Standard Work Checklist

This standard work checklist is to be used by the installer in conjunction with, not instead of, the instructions contained in this installation manual.

Customer: _____ **Date Installed:** _____

Lot/Address: _____ **Location of Fireplace:** _____

_____ **Installer:** _____

Model (circle one): **QUARTZPLA36IN** **Dealer/Distributor Phone #** _____

QUARTZPLA36IL **Serial #:** _____

WARNING! Risk of Fire or Explosion! *Failure to install appliance according to these instructions could lead to a fire or explosion. Install ONLY components and accessories approved by Hearth & Home Technologies. Unapproved components and accessories could cause fireplace to overheat.*

Appliance Install	**YES**	**IF NO, WHY?**
Verified that the chase is insulated and sealed. (Pg. 14)	☐	_____
Required non-combustible board is installed. (Pg.41)	☐	_____
Verified clearances to combustibles. (Pg. 12-13)	☐	_____
Fireplace is plum, leveled, square and secured. (Pg. 40)	☐	_____
Venting/Chimney Section 7 (Pg 42-49)		
Venting configuration complies to vent diagrams.	☐	_____
Venting installed, locked and secured in place with proper clearance. (May need to order separately.)	☐	_____
Firestops installed.	☐	_____
No insulation or foam materials in contact with venting or between ceiling/wall shield firestops.	☐	_____
Attic insulation shield installed.	☐	_____
Exterior wall/Roof flashing installed and sealed.	☐	_____
Terminations installed and sealed.	☐	_____
Electrical Section 8 (Pg 50-52)		
Unswitched power (110-120 VAC) provided to the appliance.	☐	_____
Switch wires properly installed.	☐	_____
Gas Section 9 (Pg 53-55)		
Proper appliance for fuel type.	☐	_____
Was a conversion performed?	☐	_____
Leak check performed and inlet pressure verified.	☐	_____
Verified proper air shutter setting for installation type.	☐	_____
Finishing Section 10 (Pg 56-60)		
Combustible materials not installed in non-combustible areas.	☐	_____
Verified all clearances meet installation manual requirements.	☐	_____
Mantels and wall projections comply with installation manual requirements.	☐	_____
Appliance Setup Section 11 (Pg 61-66)		
All packaging and protective materials removed (inside & outside of appliance).	☐	_____
Refractories, logs, media and embers installed correctly.	☐	_____
Glass assembly installed and secured.	☐	_____
Accessories installed properly.	☐	_____
Mesh, decorative barrier front properly installed. (May need to order separately.)	☐	_____
Manual bag and all of its contents are removed from inside/under the appliance and given to party responsible for use and operation.	☐	_____
Started appliance and verified no gas leaks exist.	☐	_____

Hearth & Home Technologies recommends the following:

- Photographing the installation and copying this checklist for your file.
- That this checklist remain visible at all times on the appliance until the installation is complete.

Comments: Further description of the issues, who is responsible (Installer/ Builder/ Other Trades, etc) and corrective action needed _____

_____

Comments Communicated to party responsible _____ by _____ on _____

(Builder / Gen. Contractor/) (Installer) (Date)

➔ = Contains updated information.

2643-982 4/22

1 Product Specific and Important Safety Information

A. Appliance Certification

MODELS: **QUARTZPLA36IN / QUARTZPLA36IL**
LABORATORY: **Underwriters Laboratories, Inc. (UL)**
TYPE: **Direct Vent Heater**
STANDARD: **CSA / ANSI Z21.88-2019 • CSA 2.33-2019**

This product is listed to ANSI standards for "Vented Gas Fireplace Heaters" and applicable sections of "Gas Burning Heating Appliances for Manufactured Homes and Recreational Vehicles", and "Gas Fired Appliances for Use at High Altitudes". Also Certified for Installation in a Bedroom or a Bedsitting Room.

NOTICE: *This installation must conform with local codes. In the absence of local codes you must comply with the National Fuel Gas Code, ANSI Z223.1-latest edition in the U.S.A. and the CAN/CGA B149 Installation Codes in Canada.*

NOT INTENDED FOR USE AS A PRIMARY HEAT SOURCE. This appliance is tested and approved as either supplemental room heat or as a decorative appliance. It should not be factored as primary heat in residential heating calculations.

B. Glass Specifications

This appliance is equipped with ceramic glass. Replace glass only with ceramic glass. Please contact your dealer for replacement glass.

C. BTU Specifications

Models *(U.S. or Canada)*		Maximum Input BTU/h	Minimum Input BTU/h	Orifice Size (DMS)
QUARTZPLA36IN (NG)	*(0-2000 ft)*	30,500	15,000	#37
QUARTZPLA36IL (Propane)	*(0-2000 ft)*	29,500	15,000	#52

D. High Altitude Installations

NOTICE: *If the heating value of the gas has been reduced, these rules do not apply. Check with your local gas utility or authorities having jurisdiction.*

When installing above 2000 feet elevation:

- In the USA: Reduce input rate 4% for each 1000 feet above 2000 feet.
- In CANADA: Input ratings are certified without a reduction of input rate for elevations up to 4500 feet (1370 m) above sea level. Please consult provincial and/or local authorities having jurisdiction for installations at elevations above 4500 feet (1370 m).

Check with your local gas utility to determine proper orifice size.

E. Non-Combustible Materials Specification

Material which will not ignite and burn. Such materials are those consisting entirely of steel, iron, brick, tile, concrete, slate, glass or plasters, or any combination thereof.

Materials that are reported as passing **ASTM E 136, Standard Test Method for Behavior of Materials in a Vertical Tube Furnace at 750 ºC** shall be considered non-combustible materials.

F. Combustible Materials Specification

Materials made of or surfaced with wood, compressed paper, plant fibers, plastics, or other material that can ignite and burn, whether flame proofed or not, or plastered or unplastered shall be considered combustible materials.

G. Electrical Codes

NOTICE: *This appliance must be electrically wired and grounded in accordance with local codes or, in the absence of local codes, with* **National Electric Code ANSI/NFPA 70-latest edition** *or the* **Canadian Electric Code CSA C22.1.**

- A 110-120 VAC circuit for this product must be protected with ground-fault circuit interrupter protection, in compliance with the applicable electrical codes, when it is installed in locations such as in bathrooms or near sinks.

H. California

WARNING: This product and the fuels used to operate this product (liquid propane or natural gas), and the products of combustion of such fuels, can expose you to chemicals including benzene, which is known to the State of California to cause cancer and reproductive harm. For more information go to: www.P65Warnings.ca.gov.

Note: The following requirements reference various Massachusetts and national codes not contained in this document.

I. Requirements for the Commonwealth of Massachusetts

For all side wall horizontally vented gas fueled equipment installed in every dwelling, building or structure used in whole or in part for residential purposes, including those owned or operated by the Commonwealth and where the side wall exhaust vent termination is less than seven (7) feet above finished grade in the area of the venting, including but not limited to decks and porches, the following requirements shall be satisfied:

Installation of Carbon Monoxide Detectors

At the time of installation of the side wall horizontal vented gas fueled equipment, the installing plumber or gas fitter shall observe that a hard wired carbon monoxide detector with an alarm and battery back-up is installed on the floor level where the gas equipment is to be installed. In addition, the installing plumber or gas fitter shall observe that a battery operated or hard wired carbon monoxide detector with an alarm is installed on each additional level of the dwelling, building or structure served by the side wall horizontal vented gas fueled equipment. It shall be the responsibility of the property owner to secure the services of qualified licensed professionals for the installation of hard wired carbon monoxide detectors.

In the event that the side wall horizontally vented gas fueled equipment is installed in a crawl space or an attic, the hard wired carbon monoxide detector with alarm and battery back-up may be installed on the next adjacent floor level.
In the event that the requirements of this subdivision can not be met at the time of completion of installation, the owner shall have a period of thirty (30) days to comply with the above requirements; provided, however, that during said thirty (30) day period, a battery operated carbon monoxide detector with an alarm shall be installed.

Approved Carbon Monoxide Detectors

Each carbon monoxide detector as required in accordance with the above provisions shall comply with NFPA 720 and be ANSI/UL 2034 listed and IAS certified.

Signage

A metal or plastic identification plate shall be permanently mounted to the exterior of the building at a minimum height of eight (8) feet above grade directly in line with the exhaust vent terminal for the horizontally vented gas fueled heating appliance or equipment. The sign shall read, in print size no less than one-half (1/2) in. in size, **"GAS VENT DIRECTLY BELOW. KEEP CLEAR OF ALL OBSTRUCTIONS".**

Inspection

The state or local gas inspector of the side wall horizontally vented gas fueled equipment shall not approve the installation unless, upon inspection, the inspector observes carbon monoxide detectors and signage installed in accordance with the provisions of 248 CMR 5.08(2)(a)1 through 4.

Exemptions

The following equipment is exempt from 248 CMR 5.08(2)(a)1 through 4:

- The equipment listed in Chapter 10 entitled "Equipment Not Required To Be Vented" in the most current edition of NFPA 54 as adopted by the Board; and
- Product Approved side wall horizontally vented gas fueled equipment installed in a room or structure separate from the dwelling, building or structure used in whole or in part for residential purposes.

MANUFACTURER REQUIREMENTS

Gas Equipment Venting System Provided

When the manufacturer of Product Approved side wall horizontally vented gas equipment provides a venting system design or venting system components with the equipment, the instructions provided by the manufacturer for installation of the equipment and the venting system shall include:

- Detailed instructions for the installation of the venting system design or the venting system components; and
- A complete parts list for the venting system design or venting system.

Gas Equipment Venting System NOT Provided

When the manufacturer of a Product Approved side wall horizontally vented gas fueled equipment does not provide the parts for venting the flue gases, but identifies "special venting systems", the following requirements shall be satisfied by the manufacturer:

- The referenced "special venting system" instructions shall be included with the appliance or equipment installation instructions; and
- The "special venting systems" shall be Product Approved by the Board, and the instructions for that system shall include a parts list and detailed installation instructions.

A copy of all installation instructions for all Product Approved side wall horizontally vented gas fueled equipment, all venting instructions, all parts lists for venting instructions, and/or all venting design instructions shall remain with the appliance or equipment at the completion of the installation.

See Gas Connection section for additional Commonwealth of Massachusetts requirements.

2 Getting Started

A. Design and Installation Considerations

WARNING! Risk of Fire or Explosion! *Read all instructions before starting the installation.*

Direct vent gas appliances are designed to operate with all combustion air siphoned from outside of the building and all exhaust gases expelled to the outside. No additional outside air source is required.

Installation MUST comply with local, regional, state and national codes and regulations. Consult insurance carrier, local building inspector, fire officials or authorities having jurisdiction over restrictions, installation inspection and permits.

Before installing, determine the following:

- Where the appliance is to be installed.
- The vent system configuration to be used.
- Gas supply piping requirements.
- Provisions for optional heat management system.
- Electrical wiring requirements.
- Framing and finishing details.
- Whether optional accessories—devices such as a fan, wall switch, or remote control—are desired.

Installation and service of this appliance should be performed by qualified personnel. Hearth & Home Technologies recommends HHT Factory Trained or NFI certified professionals.

hearthED FACTORY TRAINING Fuel Your Fire

NFI NATIONAL FIREPLACE INSTITUTE A CERTIFICATION AGENCY

Improper installation, adjustment, alteration, service or maintenance can cause injury or property damage. For assistance or additional information, consult a qualified service technician, service agency or your dealer.

B. Good Faith Wall Surface/TV Guidelines

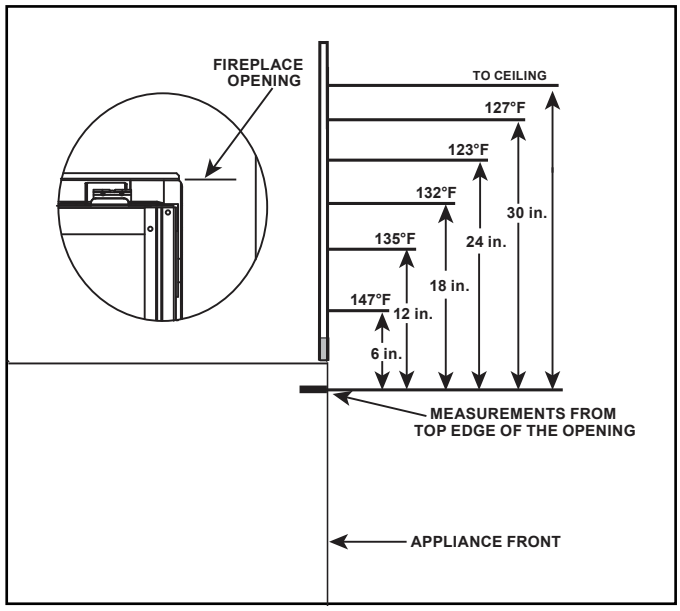

Figure 2.1 Good Faith Wall Surface Temperatures Above Appliance

NOTICE: *Surface temperatures listed above are taken with a temperature measuring probe as prescribed by the test standard used for appliance certification. Temperatures on walls or mantels taken with an infrared thermometer may yield increased temperatures of up to 30 °F (17 °C) or more depending on the thermometer settings and material characteristics being measured. Use appropriate finishing materials that are able to withstand these conditions. For additional finishing guidelines, see Section 10.*

Good Faith Guidelines for TV Installations Above Appliance

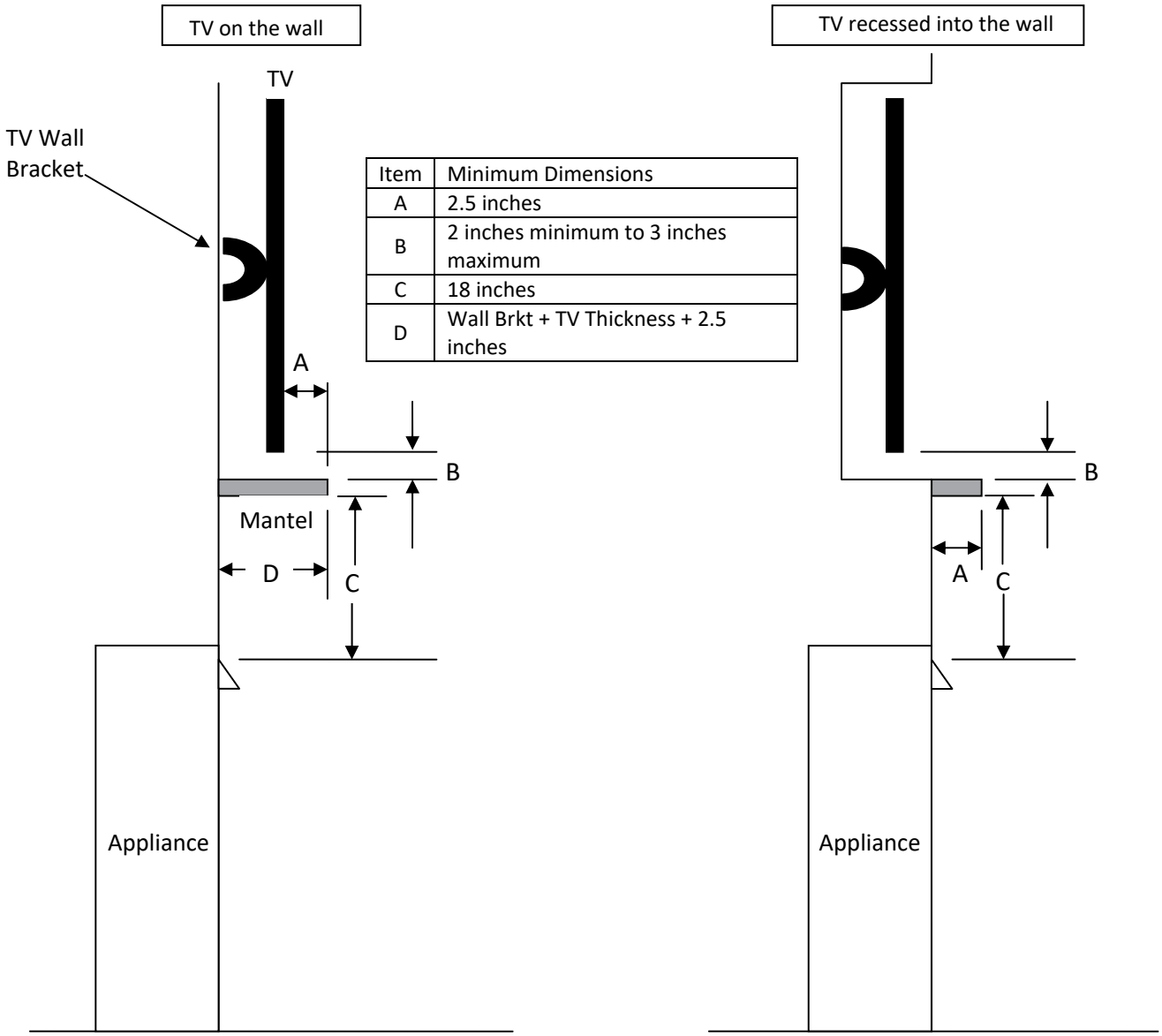

Item	Minimum Dimensions
A	2.5 inches
B	2 inches minimum to 3 inches maximum
C	18 inches
D	Wall Brkt + TV Thickness + 2.5 inches

Notes:

1. These are good faith recommended clearances only and not a guarantee of compliance with all TV manufacturers' maximum allowable operating temperatures.
2. Since every home has unique air flow characteristics and maximum allowable operating temperatures can vary from manufacturer to manufacturer and from model to model, actual TV temperatures should be validated at the time of each installation. TVs should not be used in situations where the actual TV temperature exceeds the manufacturers' maximum allowable operating temperatures identified in the TV's technical specifications. Contact the TV's manufacturer directly if you cannot locate this information or have questions regarding the information.
3. Mantel height and depth must conform to mantel requirements specified in the appliance installation manual.
4. "C" dimension taken from the top of the hood or appliance opening.
5. Suggestions on how to further reduce TV temperatures:
    a. Increase "A" dimension.
    b. Increase "C" dimension, however, increasing "B" dimension beyond maximum recommended typically results in higher temperatures.

Figure 2.2 Good Faith TV Guidelines

C. Tools and Supplies Needed

Before beginning the installation be sure that the following tools and building supplies are available.

Hand Tools	Tape measure
Level	Framing material
Manometer	Framing square
Voltmeter	Electric drill and bits (1/4 in.)
Plumb line	Safety glasses/Gloves
Wrenches	Reciprocating saw

1/4 in. nut driver

Non-corrosive leak check solution

1/2 - 3/4 in. length, #6 or #8 Self-drilling screws

Caulking material (300 ºF minimum continuous exposure rating)

D. Inspect Appliance and Components

WARNING! Risk of Fire or Explosion! *Damaged parts could impair safe operation.* ***DO NOT i****nstall damaged, incomplete or substitute components. Keep appliance dry.*

WARNING! Risk of Fire, Explosion or Electric Shock! DO NOT *use this appliance if any part has been under water. Call a qualified service technician to inspect the appliance and to replace any part of the control system and/or gas control which has been under water.*

- Carefully remove the appliance and components from the packaging.
- The vent system components, refractory liner kit and decorative barrier fronts may be shipped in separate packages.
- If packaged separately, the log set and appliance grate must be installed.
- Report to your dealer any parts damaged in shipment.
- This product is factory-equipped with an IntelliFire Touch® remote control, which was paired to the appliance at the factory. This specific remote control needs to remain with the contents of the manual bag. Do not install batteries in the remote control until performing the final appliance setup and checklist.

Hearth & Home Technologies disclaims any responsibility for, and the warranty will be voided by, the following actions:

- Installation and use of any damaged appliance or vent system component.
- Modification of the appliance or vent system.
- Installation other than as instructed by Hearth & Home Technologies.
- Improper positioning of the logs/media (as applicable) or the glass assembly.
- Installation and/or use of any component part not approved by Hearth & Home Technologies.

3 Framing and Clearances

A. Appliance Weights and Dimensions

Dimensions are actual appliance dimensions. Use for reference only. For framing dimensions and clearances refer to Section 5.

Appliance Weight Table

Model	Pounds	Kilograms
QUARTZPLA36IN	145	66
QUARTZPLA36IL	145	66

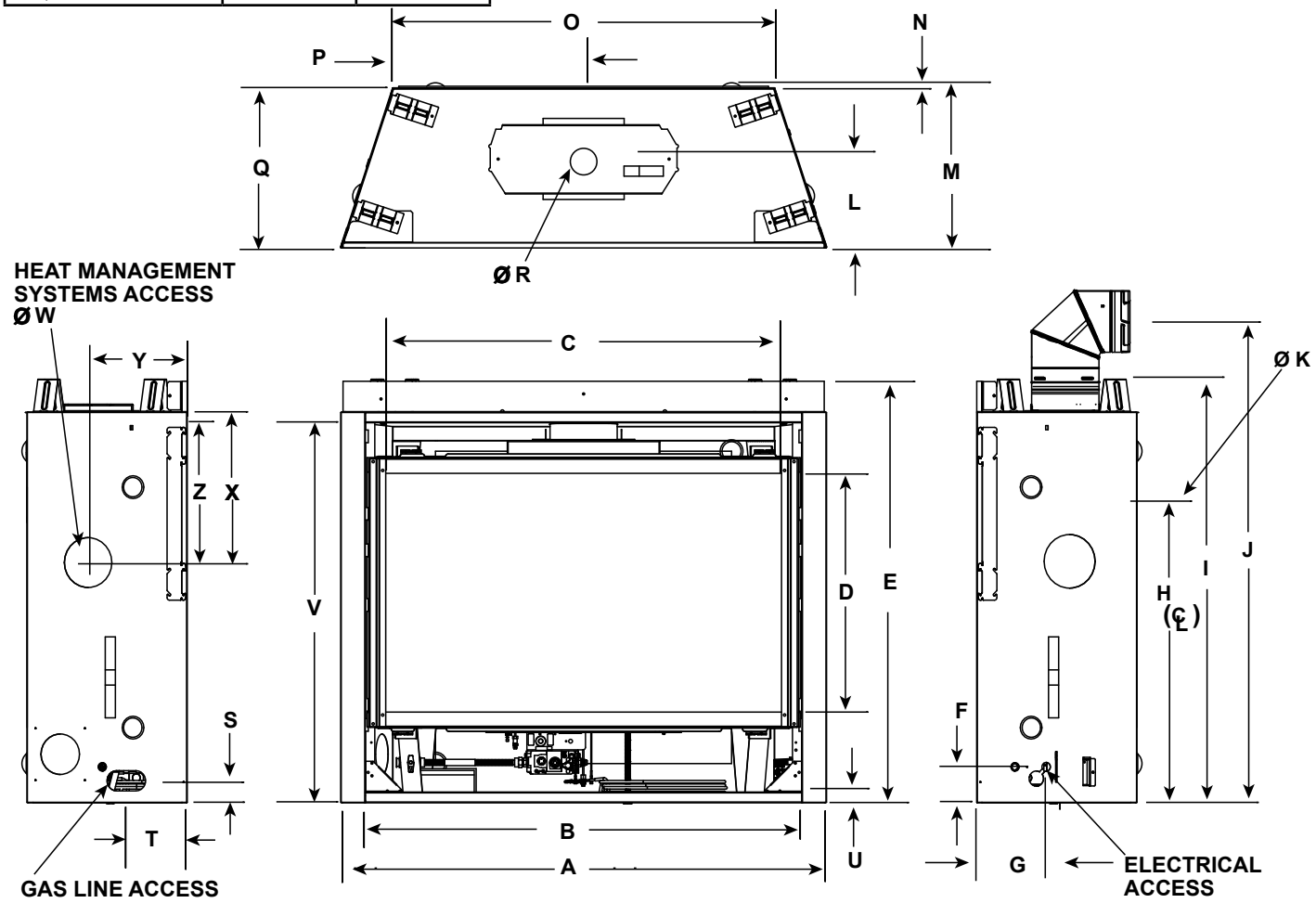

Appliance Dimensions Table

QUARTZPLA36IN / QUARTZ36PLA36IL		
Location	Inches	Millimeters
A	41	1041
B	36-1/8	918
C	32-1/16	814
D	21-1/2	546
E	37-5/8	956
F	3-9/16	90
G	6-7/8	175
H	26-7/8	683
I	37-7/8	962
J	39-15/16	1014
K	8	203
L	8-13/16	224
M	16-5/16	414

QUARTZPLA36IN / QUARTZ36PLA36IL		
Location	Inches	Millimeters
N	1/2	13
O	30-3/4	781
P	15-3/8	391
Q	15-7/8	403
R	6-5/8	168
S	2-3/16	56
T	6	152
U	1	25
V	33-9/16	853
W	5	127
X	14	356
Y	9-1/8	232
Z	13	330

Figure 3.1 Appliance Dimensions

B. Decorative Barrier Front Dimensions

DBM36 DECORATIVE BARRIER FRONT

IMPORTANT! This fireplace requires an installed decorative barrier front to prevent direct contact with the hot viewing glass. DO NOT operate the fireplace with the barrier removed.

If decorative barrier front is not present, contact dealer.

Note: See Section 10 for hearth, mantel and finishing requirements.

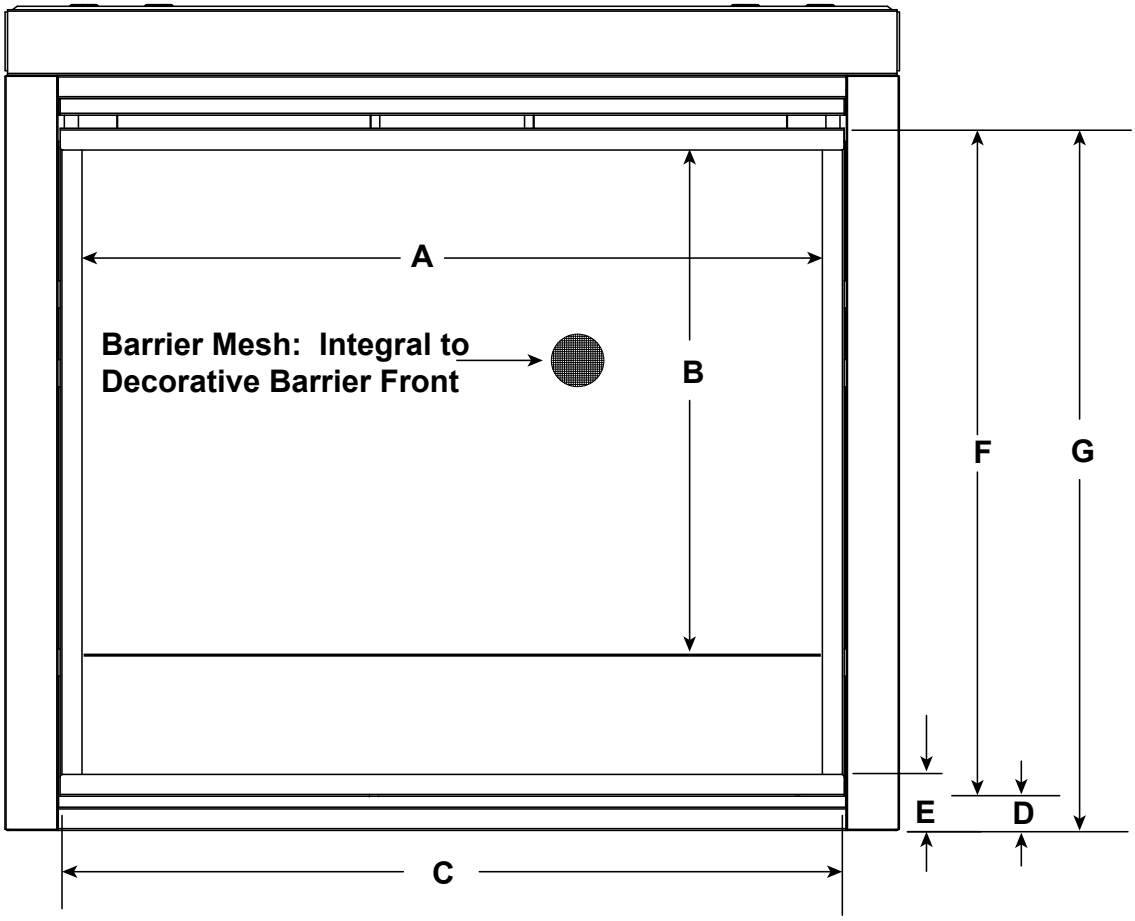

			A	B	C	D	E	F	G
QUARTZPLA36IN QUARTZPLA36IL	DBM36	in.	33-7/8	24-1/4	35-15/16	1-5/8	2-5/8	30-5/8	32-1/4
		mm	860	616	913	41	67	778	819

Figure 3.2 Decorative Barrier Front Dimensions - DBM36 Decorative Barrier Front

CRD36 DECORATIVE BARRIER FRONT

IMPORTANT! This fireplace requires an installed decorative barrier front to prevent direct contact with the hot viewing glass. DO NOT operate the fireplace with the barrier removed.

Decorative barrier front must be ordered at time of fireplace purchase. If decorative barrier front is not present, contact dealer.

Note: See Section 10 for hearth, mantel and finishing requirements.

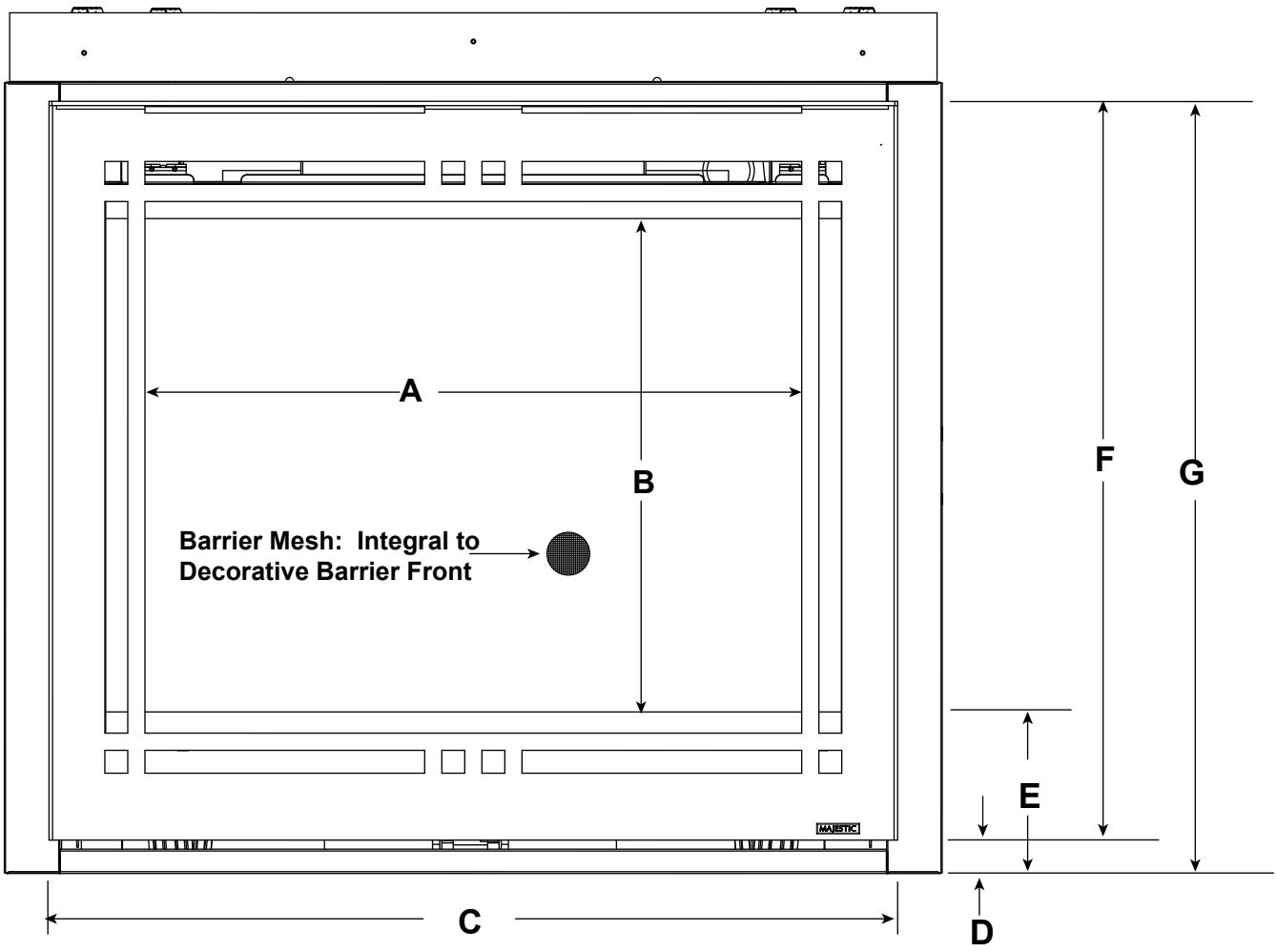

			A	B	C	D	E	F	G
QUARTZPLA36IN QUARTZPLA36IL	CRD36	in.	28-5/8	23-3/16	37-1/16	1-1/4	6	32-1/4	33-5/8
		mm	727	589	941	32	153	819	854

Figure 3.3 Decorative Barrier Front Dimensions - CRD36 Decorative Barrier Front

C. Appliance Location and Clearances to Combustibles

When selecting a location for the appliance it is important to consider the required clearances to walls and allow sufficient clearance for heat management systems venting. See Figure 3.4 and Figure 3.5.

WARNING! Risk of Fire or Burns! *Provide adequate clearance around air openings and for service access. Due to high temperatures, the appliance should be located out of traffic and away from furniture and draperies.*

NOTICE: *Illustrations reflect typical installations and are FOR DESIGN PURPOSES ONLY. Illustrations/diagrams are not drawn to scale. Actual installation may vary due to individual design preference.*

NOTICE: Allow 13 inches minimum clearance on side(s) of appliance for venting of heat management system.

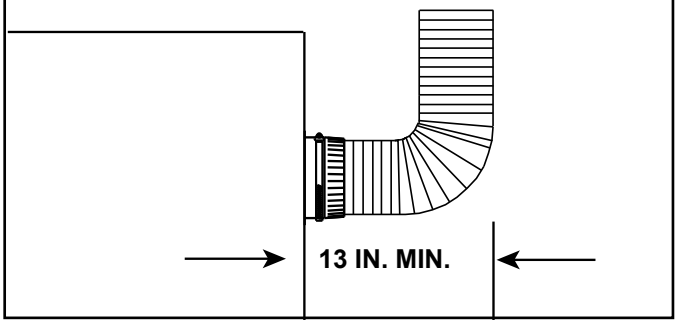

Figure 3.5 Clearance for Heat Management System

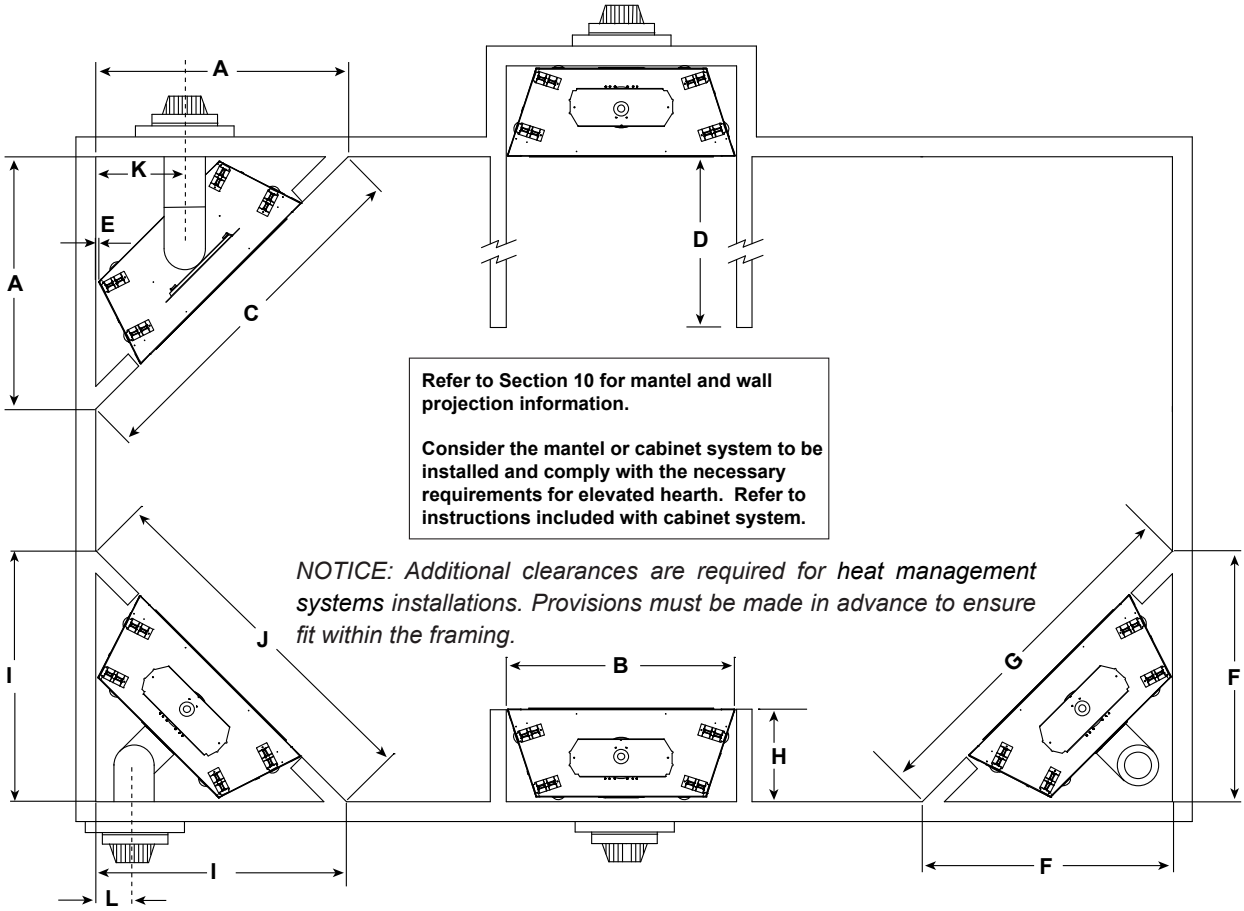

Models		A	B	C	D	E Min.	F	G	H	I	J	K	L
QUARTZPLA36IN QUARTZPLA36IL	in.	45-1/2	42	64-3/8	See Section 10 for Mantel Projections	1/2	45-1/2	64-3/8	16-1/4	48-1/2	68-3/4	16-5/8	7-1/2
	mm	1156	1067	1635		13	1156	1635	413	1232	1746	422	191

Figure 3.4 Appliance Locations

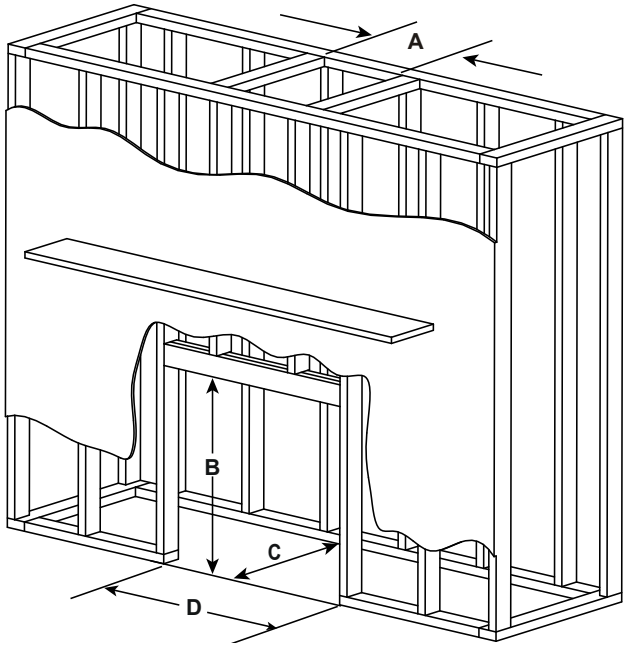

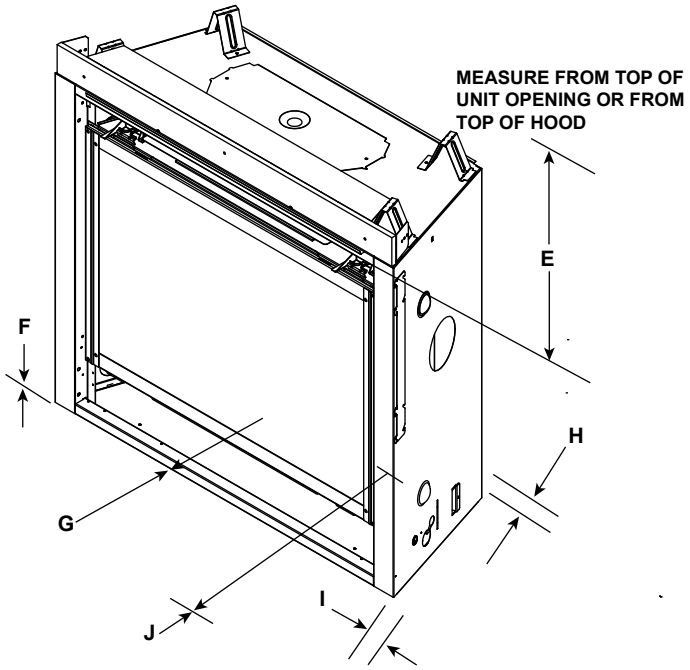

* MINIMUM FRAMING DIMENSIONS													
Models		A		B	C		D	E	F	G	H	I	J
		DVP Pipe	SLP Pipe	Rough Opening (Height)	**DVP Pipe	SLP Pipe	Rough Opening (Width)	Clearance to Room Ceiling	***Combustible Floor	****Minimum Hearth Required	Behind Appliance	Sides of Appliance	Front of Appliance
		Rough Opening (Width)	Rough Opening (Width)		Rough Opening (Depth)	Rough Opening (Depth)							
QUARTZPLA36IN QUARTZPLA36IL	in.	10	8-5/8	38-1/4	16-1/4	16-1/4	42	32	0	0	1/2	1/2	36
	mm	254	219	972	413	413	1067	813	0	0	13	13	914

* Adjust framing dimensions for interior chase sheathing (such as sheetrock).
** Add 12 inches when rear venting with one 90º elbow.
*** When using combustible flooring materials, such as carpeting and padding, the combustible flooring material must not extend higher than one inch from the base of the appliance when the appliance is mounted at floor level.
**** For installations with vinyl flooring see section 3.E.

Figure 3.6 Clearances to Combustibles

D. Constructing the Appliance Chase

NOTICE: *Install appliance on hard metal or wood surfaces extending full width and depth.* ***DO NOT*** *install directly on carpeting, vinyl, or any combustible material other than wood.*

WARNING! Risk of Fire! *Maintain specified air space clearances to appliance and vent pipe:*

- *Insulation and other materials must be secured to prevent accidental contact.*
- *The chase must be properly blocked to prevent blown insulation or other combustibles from entering and making contact with fireplace or chimney.*
- *Failure to maintain airspace may cause overheating and a fire.*

A chase is a vertical box-like structure built to enclose the gas appliance and/or its vent system. In cooler climates the vent should be enclosed inside the chase.

NOTICE: *Treatment of ceiling firestops and wall shield firestops and construction of the chase may vary with the type of building. These instructions are not substitutes for the requirements of local building codes. Therefore, you MUST check local building codes to determine the requirements to these steps.*

NOTICE: Where required by code, install only sprinkler heads with a sprinkler activation temperature classified as Extra High.

- *Sprinklers inside of chase: Keep sprinkler head away from vent and chimney.*
- *Heat Management applications: Maintain 36 inches of clearance to openings from which heat is discharged such as convection slots, passive heat registers, heat zone registers, etc. Refer to Section 6.B for Heat Management options allowed for this appliance.*

Chases should be constructed and insulated in the same manner as the thermal envelope of the home based on the code requirements for that climate zone to prevent air leakage and draft problems. The chase is an extension of the building thermal envelope.

To further prevent drafts and air leakage, the wall shield and ceiling firestops should be sealed with caulk with a minimum of 300 ºF continuous exposure rating to seal gaps. Gas line holes and other openings should be sealed with caulk with a minimum of 300 ºF continuous exposure rating or stuffed with unfaced insulation. If the appliance is being installed on a cement surface, a layer of plywood may be placed underneath to prevent conducting cold up into the room.

Minimum height requirements for an exterior chase on a top-vented appliance are shown in Figure 3.7. Reference Figure 4.5 for additional clearances.

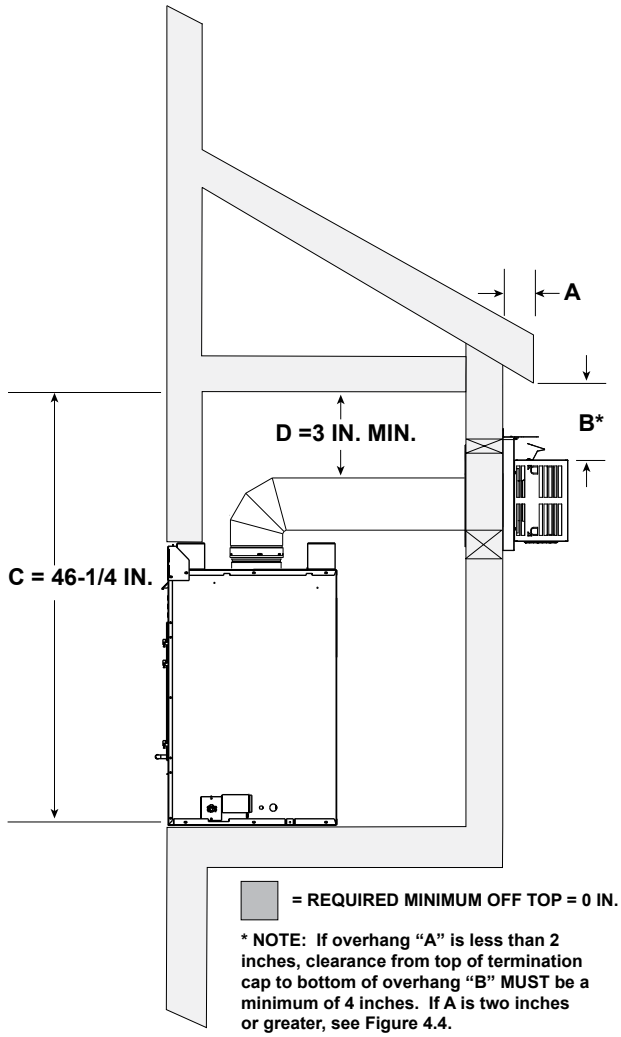

A - Measured from back of vent cap to end of overhang
B - Measured from bottom of overhang to top of termination cap
C - Measured from bottom of appliance to combustible surface
D - Measured from top of vent pipe to combustible surface

Figure 3.7 Exterior Chase - Minimum Height Requirements

E. Vinyl Flooring

Vinyl flooring is sensitive to heat. To avoid damage to the vinyl flooring, a 12 inch minimum x 12 inch minimum hearth is recommended when using vinyl flooring up to the wall. See Figure 3.8. If no hearth is used, it is recommended to provide a minimum of 18 inches of clearance in front of the appliance to the vinyl flooring OR the bottom of the appliance should be raised a minimum of 24 inches off of the floor to allow the vinyl flooring to be installed up to the wall.

NOTICE: *Clearances that do not meet the minimum guidelines could result in damage or buckling to the vinyl flooring and is done at the installer's risk.*

Hearth and Home Technologies does not recommend adhesive based vinyl flooring products due to thermal expansion during operation. Floating style flooring can be used, but will reach temperatures up to 110 °F (based on ambient temperature of 70 °F). Consult the manufacturer's flooring specifications to ensure compatibility.

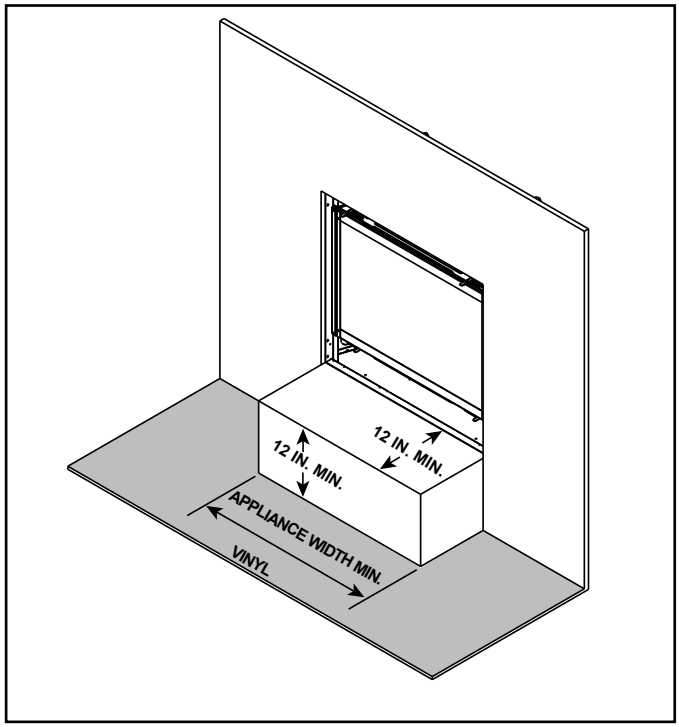

Figure 3.8 Vinyl Flooring Requirements

4 Termination Location and Vent Information

A. Approved Pipe

Approved Pipe - Rigid

WARNING! Risk of Fire, Delayed Ignition or Asphyxiation. *This appliance requires a separate vent.* ***DO NOT*** *vent to a pipe serving any other appliance.*

This appliance is approved for use with Hearth & Home Technologies DVP or SLP venting systems. Refer to Section 12.A for vent component information and dimensions. Only use listed decorative termination caps/shrouds with Hearth & Home Technologies approved venting systems.

DO NOT mix pipe, fittings or joining methods from different manufacturers.

The pipe is tested to be run inside an enclosed wall. There is no requirement for inspection openings at each joint within the wall.

Approved Pipe - Flex

WARNING! Risk of Fire, Delayed Ignition or Asphyxiation. *This appliance requires a separate vent.* ***DO NOT*** *vent to a pipe serving any other appliance.*

This appliance is approved for use with Hearth & Home Technologies SLP-FLEX (6-5/8 in.) and SLP-FLEX7 (7 inch) venting systems.

DO NOT mix pipe, fittings or joining methods from different manufacturers. SLP-FLEX and SLP-FLEX7 venting cannot be interchanged.

SLP-FLEX (6-5/8 Inch): venting may be used in any venting configuration shown in the venting tables provided that the horizontal vent length is reduce by 25%.

SLP-FLEX7 (7 Inch-Canada Only): venting requires adapter collars to transition from the 6-5/8 in. appliance starting collar and to the 6-5/8" termination cap. Refer to installation instructions included with the SLP-FLEX7 collar adapter (SLP-FLEX7-A). SLP-FLEX7 Series venting is approved for use in Canada only.

The pipe is tested to be run inside an enclosed wall. There is no requirement for inspection openings at each joint within the wall.

B. Vent Termination Minimum Clearances

⚠ WARNING

Fire Risk.

Maintain vent clearance to combustibles as specified.

- **DO NOT** pack air space with insulation or other materials.

Failure to keep insulation or other materials away from vent pipe could cause overheating and fire.

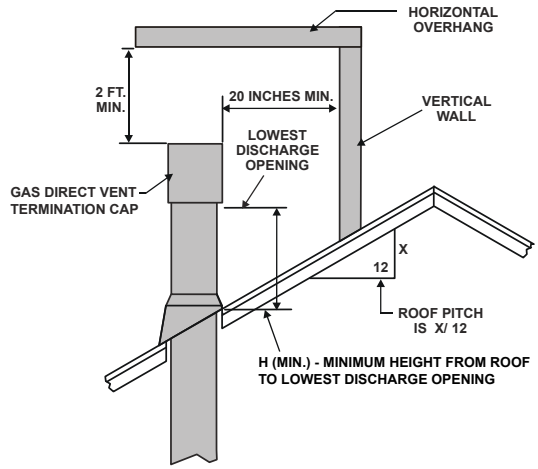

Roof Pitch	H (Min.) Ft
Flat to 6/12	1.0*
Over 6/12 to 7/12	1.25*
Over 7/12 to 8/12	1.5*
Over 8/12 to 9/12	2.0*
Over 9/12 to 10/12	2.5*
Over 10/12 to 11/12	3.25
Over 11/12 to 12/12	4.0
Over 12/12 to 14/12	5.0
Over 14/12 to 16/12	6.0
Over 16/12 to 18/12	7.0
Over 18/12 to 20/12	7.5
Over 20/12 to 21/12	8.0

* H minimum may vary depending on regional snowfall. Refer to local codes.

Figure 4.1 Minimum Height From Roof to Lowest Discharge Opening

A	B
6 in. (minimum) up to 20 in. *152 mm/508 mm*	18 in. minimum *457 mm*
20 in. and over	0 in. minimum

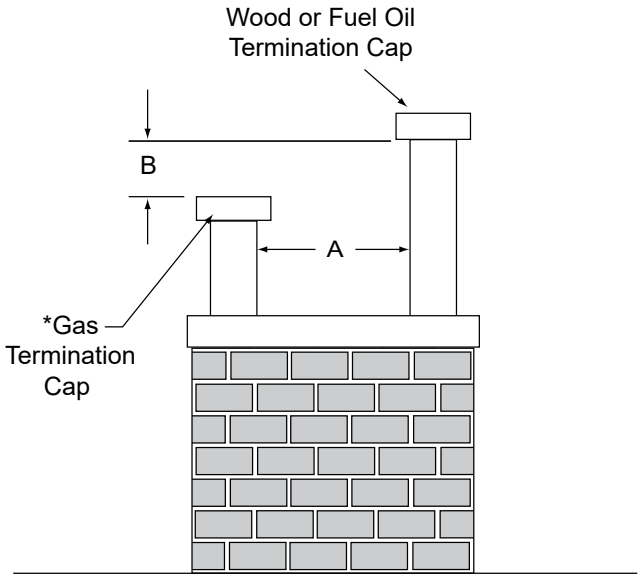

* If two gas terminations are present, they may be level (B = 0 inches) provided A is a minimum of 6 inches.

Figure 4.2 Staggered Termination Caps

CAUTION! Risk of Burns! *Termination caps are HOT, consider proximity to doors, traffic areas or where people may pass or gather (sidewalk, deck, patio, etc.). Listed cap shields available. Contact your dealer.*

- Local codes or regulations may require different clearances.
- Hearth & Home Technologies assumes no responsibility for the improper performance of the appliance when the venting system does not meet these requirements.
- Vinyl protection kits are suggested for use with vinyl siding.
- Measure horizontal and vertical termination cap clearances as noted in Figure 4.3 and Figure 4.4.

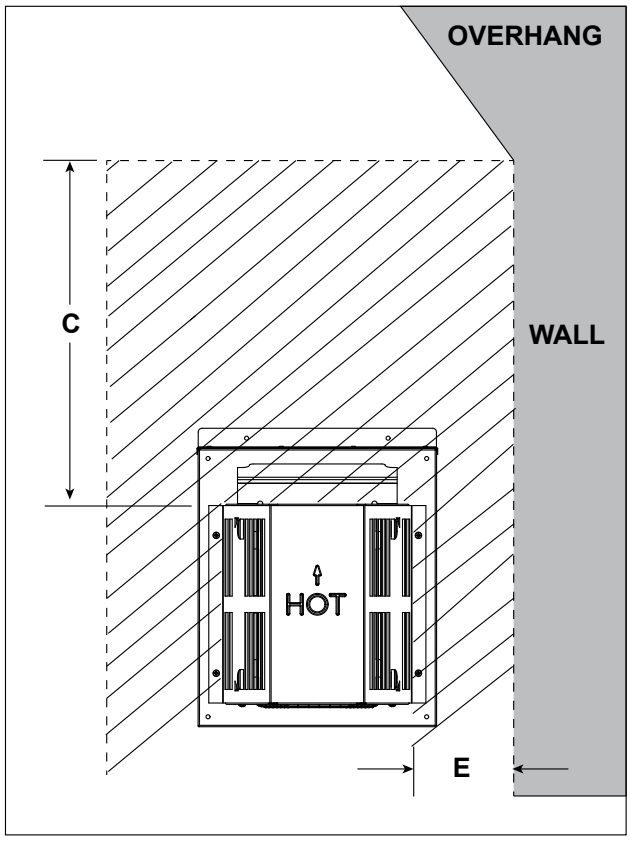

C and E dimensions are defined in Figure 4.5.

Figure 4.4 Measure Horizontal and Vertical Termination Clearance to Trapezoid Portion of Cap

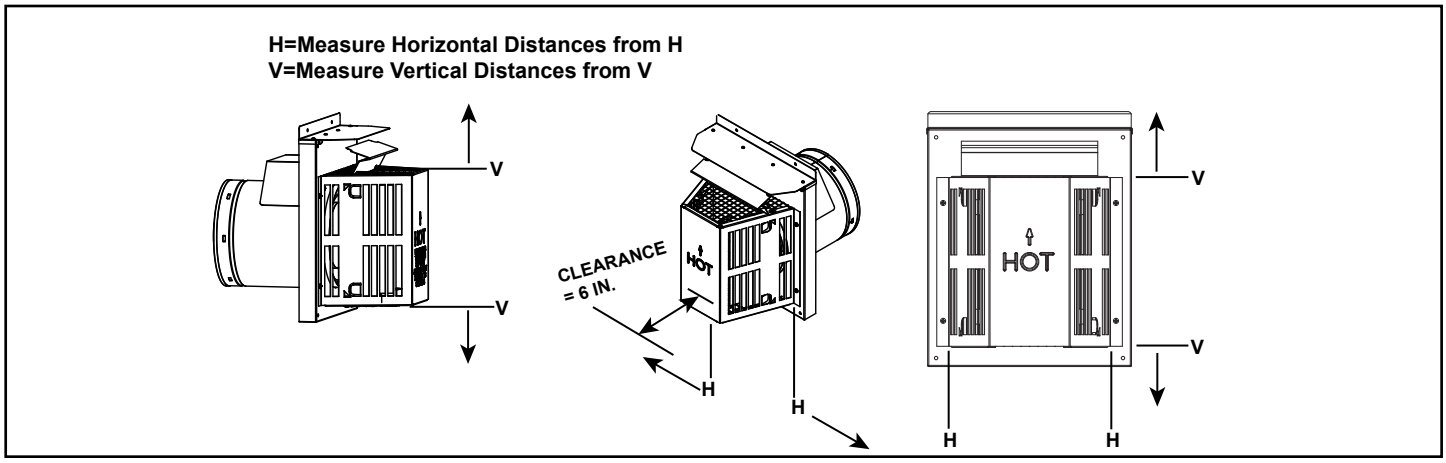

Figure 4.3

C. Vent Terminal Clearances

= AREA WHERE TERMINAL IS NOT PERMITTED

X = AIR SUPPLY INLET

V = VENT TERMINAL

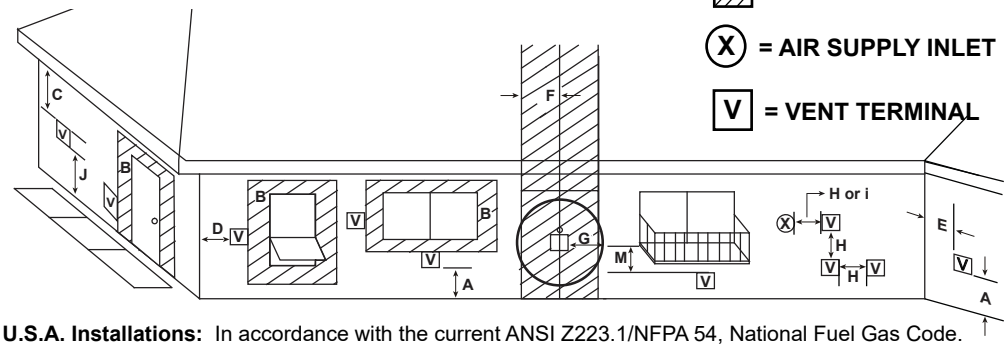

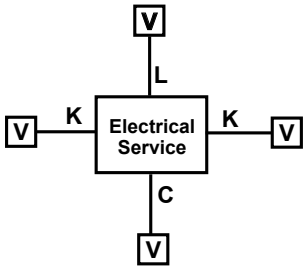

U.S.A. Installations: In accordance with the current ANSI Z223.1/NFPA 54, National Fuel Gas Code.
Canadian Installations: In accordance with the current CSA B149.1, Natural Gas and Propane Installation Code.

		U.S.A.	CANADA
A	Clearance above grade,veranda, porch, deck, balcony or roof.	12 in. (305 mm)	12 in. (305 mm)
B	Clearance to window or door that may be opened, or to permanently closed window	9 in. (229 mm)	12 in. (305 mm)
C	clearance below unventilated soffit	18 in. (457 mm)	18 in. (457 mm)
	clearance below ventilated soffit	18 in. (457 mm)	18 in. (457 mm)
	clearance below any vinyl soffits and electrical service	30 in. (762 mm)	30 in. (762 mm)
D	clearance to outside corner	6 in. (152 mm)	6 in. (152 mm)
E	clearance to inside corner	6 in. (152 mm)	6 in. (152 mm)
F	clearance to each side of center line extended above gas meter/regulator assembly	Clearance in accordance with local installation codes and the requirements of the gas supplier.	3 ft (914 mm) within a height 15 ft (4.5 m) above the meter/ regulator assembly
G	clearance to gas service regulator vent outlet	3 ft (914 mm)	3 ft (914 mm)
H	clearance to non-mechanical air supply inlet to building or the combustion air inlet to any other appliance termination (mechanical or non-mechanical)	9 in. (229 mm)	12 in. (305 mm)
I	clearance to a mechanical (powered) air supply inlet ***(All mechanical air intakes within 10 feet of a horizontal termination cap must be a minimum of 3 feet below termination.)	3 ft (914 mm)***	6 ft (1.8m)
J	On **public** property: clearance above paved sidewalk or a paved driveway.	7 ft (2.1 m)	7 ft (2.1 m)**
	**(A vent shall not terminate directly above a sidewalk or paved driveway which is located between two single family dwellings and serves both dwellings.)		
K	clearance from sides of electrical service	6 in. (152 mm)	6 in. (152 mm)
	Location of the vent termination must not interfere with access to the electrical service.		
L	clearance above electrical service	12 in. (305 mm)	12 in. (305 mm)
	Location of the vent termination must not interfere with access to the electrical service.		
M	clearance under veranda, porch, deck, balcony or overhang *(Permitted only if veranda, porch, deck, or balcony is fully open on a minimum of two sides beneath the floor.)	18 in. (457 mm)	12 in. (305 mm)*
	vinyl or composite overhang	42 in. (1067 mm)	42 in. (1067 mm)

Figure 4.5 Minimum Clearances for Termination

D. Use of Elbows

Diagonal runs have both vertical and horizontal vent aspects when calculating the effects. Use the rise for the vertical aspect and the run for the horizontal aspect. See Figure 4.6.

Two 45º elbows may be used in place of one 90º elbow. On 45º runs, one foot of diagonal is equal to 8-1/2 inch (216 mm) horizontal run and 8-1/2 inch (216 mm) vertical run. A length of straight pipe is allowed between two 45º elbows. See Figure 4.6.

Figure 4.7 shows the vertical and horizontal offsets for DVP or SLP elbows.

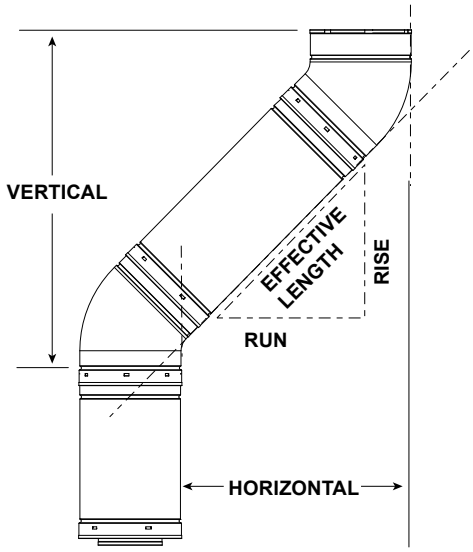

SLP Pipe	Effective Length		Rise/Run	
	Inches	Millimeters	Inches	Millimeters
SLP4	4	102	2-3/4	70
SLP6	6	152	4-1/4	108
SLP12	12	305	8-1/2	216
SLP24	24	610	17	432
SLP36	36	914	25-1/2	648
SLP48	48	1219	34	864
SLP6A	3 to 6	76 to 152	2-1/8-4-1/4	54-108
SLP12A	3 to 12	76 to 305	2-1/8-8-1/2	54-216

DVP Pipe	Effective Length		Rise/Run	
	Inches	Millimeters	Inches	Millimeters
DVP4	4	102	2-3/4	70
DVP6	6	152	4-1/4	108
DVP12	12	305	8-1/2	216
DVP24	24	610	17	432
DVP36	36	914	25-1/2	648
DVP48	48	1219	34	864
DVP6A	3 to 6	76 to 152	2-1/8-4-1/4	54-108
DVP12A	3 to 12	76 to 305	2-1/8-8-1/2	54-216

Figure 4.6

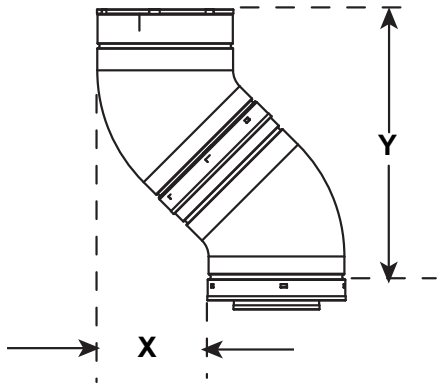

Vent Type	X		Y	
	Inches	Millimeters	Inches	Millimeters
DVP	6-5/8	168	16-1/2	419
SLP	5-1/4	133	11-3/8	289

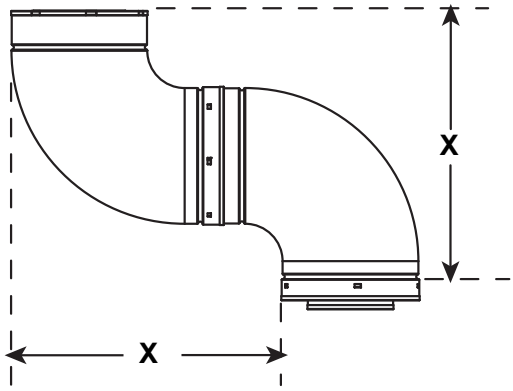

Vent Type	X	
	Inches	Millimeters
DVP	16-1/4	413
SLP	11-1/4	286

Figure 4.7 Vertical and Horizontal Offset for DVP and SLP Elbows

E. Use of Flex Vent (SLP-FLEX Series 6-5/8 Inch)

The flex vent must be supported with the spacing between support intervals not exceeding 4 feet, with no more than 1/2 inch sag between supports.

A support is required at each change in venting direction, and in any location where it is necessary to maintain the necessary clearance to combustibles. A simple “up and out” installation (Figure 4.8) requires only enough support to maintain the necessary clearance to combustibles. However, the vent attachment point and the firestop location are considered to be supports.

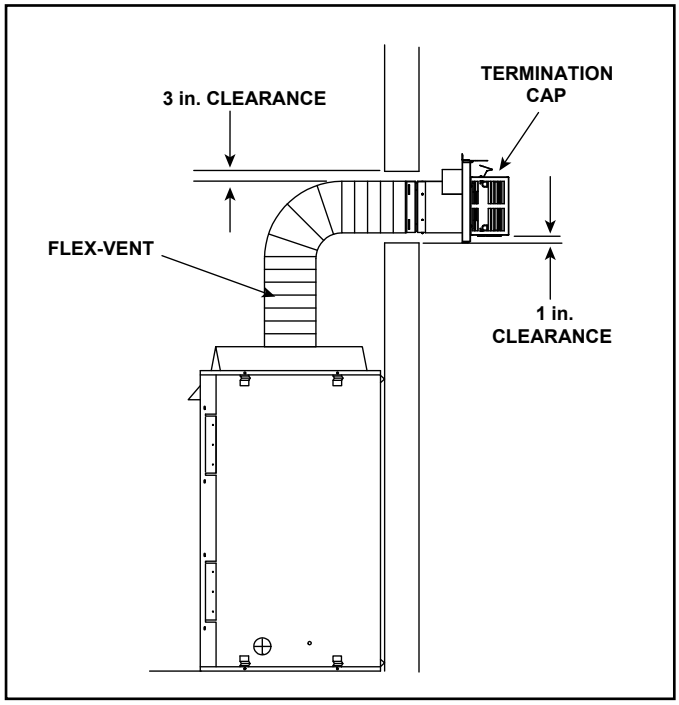

Figure 4.8 Flex Vent Pipe - Generic Fireplace Shown

F. Vent Diagrams

General Rules:

- When penetrating a combustible wall, a wall shield firestop must be installed.
- When penetrating a combustible ceiling, a ceiling firestop must be installed.
- Horizontal runs of vent do not require vertical rise; horizontal runs may be level.
- It is recommended that the horizontal termination cap have a 1/4 inch downward slant to allow any moisture in cap to be released. See Figure 4.9.

If venting configuration differs from the vent diagrams on the following pages (Figure 4.12-4.26), these rules also apply:

- SUBTRACT 3 ft from the total H measurement for each 90º elbow installed horizontally.
- SUBTRACT 1-1/2 ft from the total H measurement for each 45º elbow installed horizontally.
- A maximum of three 90º elbows (or six 45º elbows) may be used in any vent configuration. Some elbows may be installed horizontally. See Figure 4.13.
- Elbows may be placed back to back anywhere in the system.
- Any 90º elbow may be replaced with two back to back 45º elbows.

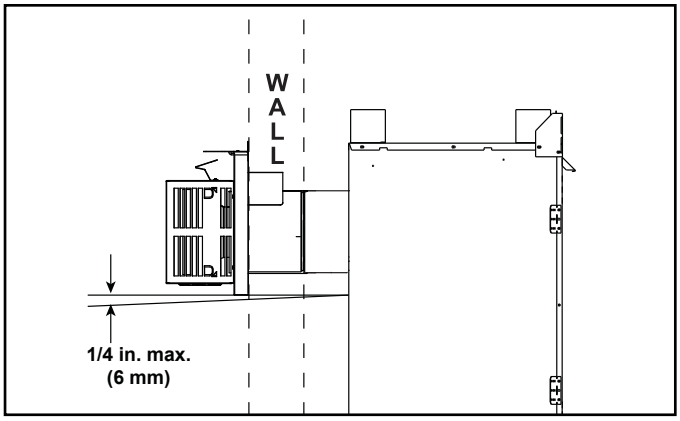

Figure 4.9

Measuring Standards:

Vertical and horizontal measurements listed in the vent diagrams and clearances for termination were made using the following standards:

- Pipe measurements are shown using the effective length of pipe. See Section 12.A (Figure 12.1 for DVP, Figure 12.9 for SLP) for information on effective length of pipe components.
- Horizontal terminations are measured to the outside mounting surface (flange of termination cap). See Figure 4.10.
- Vertical terminations are measured to top of last section of pipe. See Figure 4.11.
- Horizontal pipe installed level with no rise.

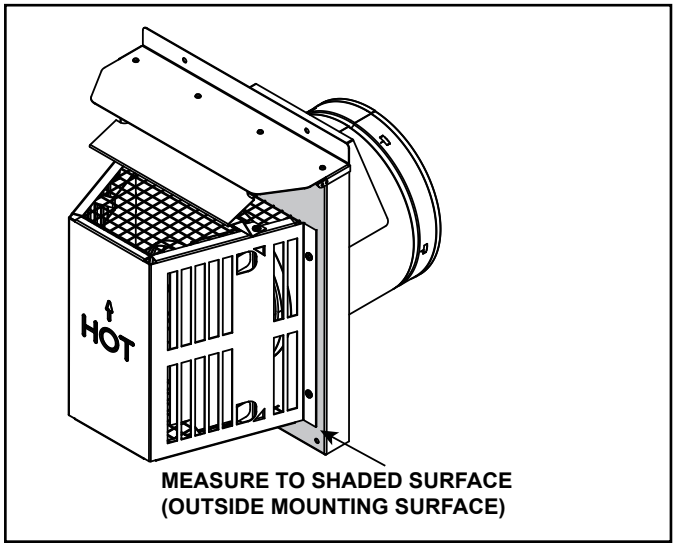

Figure 4.10 Measure to Outside Mounting Surface

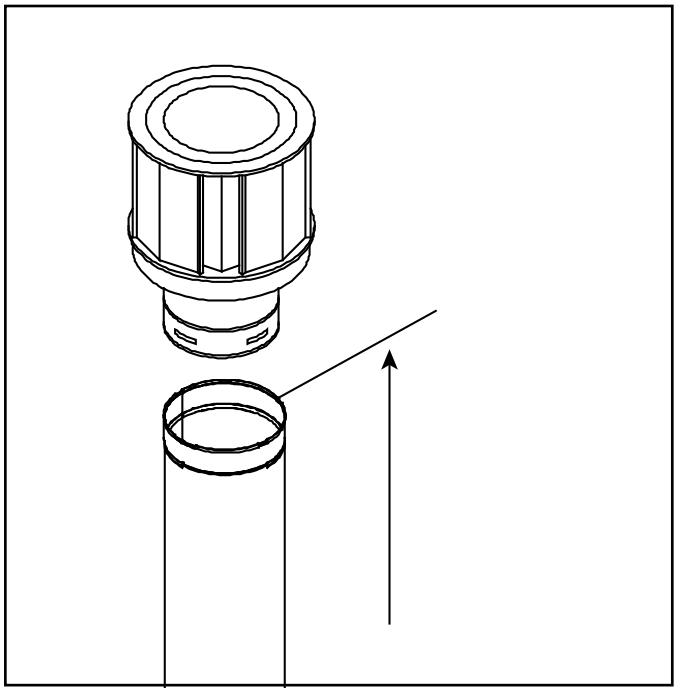

Figure 4.11 Measure to Top of Last Section of Pipe

Top Vent - Horizontal Termination

One Elbow

Note: Use SLP Series components only.

Note: There MUST be a 25% reduction in total H when using flex vent except when using the simple up and out installation. See Figure 4.8.

V Minimum		H Maximum	
		All Models	
90º Elbow*		1 ft.	305 mm
1/2 ft.*	152 mm	2 ft.	610 mm
1-1/2 ft.*	457 mm	3 ft.	914 mm
2-1/2 ft.*	762 mm	5 ft.	1-1/2 m
3-1/2 ft.	1.1 m	7 ft.	2.1 m
4-1/2 ft.	1.4 m	15 ft.	4.6 m
H_1 Maximum= 15 ft. (4.6 m) $V_1 + H_1$ Maximum= 40 ft. (12.2 m) * See warning below			

⚠ WARNING *

Fire Risk.

- When using SLP-HRC-SS termination cap on top vented fireplaces, a one foot minimum vertical vent section is required before installing first elbow.

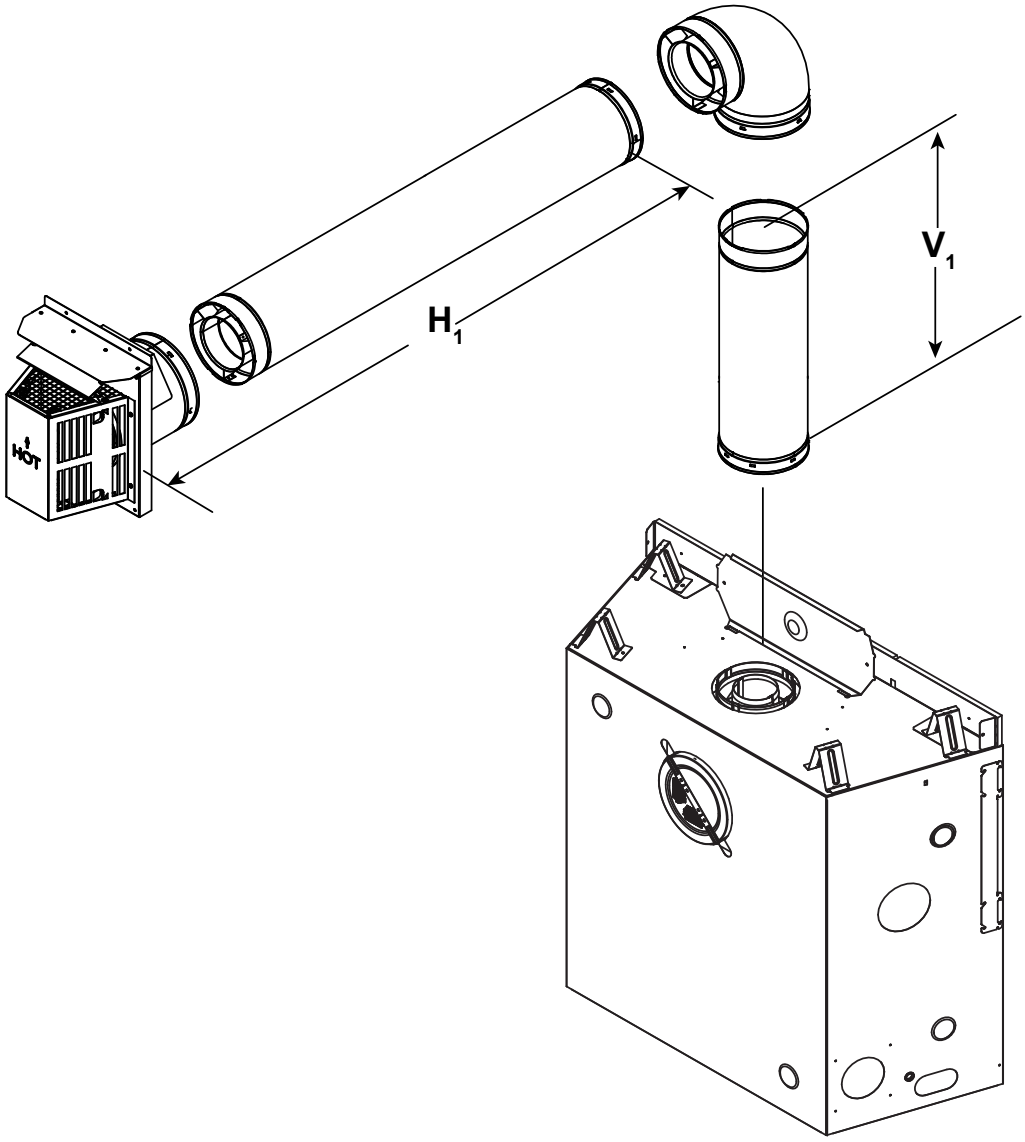

Figure 4.12

Top Vent - Horizontal Termination - (continued)

Two Elbows

Note: Use SLP Series components only.

Note: There MUST be a 25% reduction in total H when using flex vent except when using the simple up and out installation. See Figure 4.8.

V Minimum		H Maximum	
		All Models	
90º Elbow*		NOT ALLOWED	
1/2 ft.*	152 mm	1 ft.	305 mm
1-1/2 ft.*	457 mm	2 ft.	610 mm
2-1/2 ft.*	762 mm	4 ft.	1.2 m
3-1/2 ft.	1.1 m	6 ft	1.8 m
4-1/2 ft.	1.4 m	14 ft.	4.3 m
$H_1 + H_2$ Maximum= 14 ft. (4.3 m) $V_1 + H_1 + H_2$ Maximum= 40 ft. (12.2 m) * See warning below			

⚠ WARNING *

Fire Risk.

- When using SLP-HRC-SS termination cap on top vented fireplaces, a one foot minimum vertical vent section is required before installing first elbow.

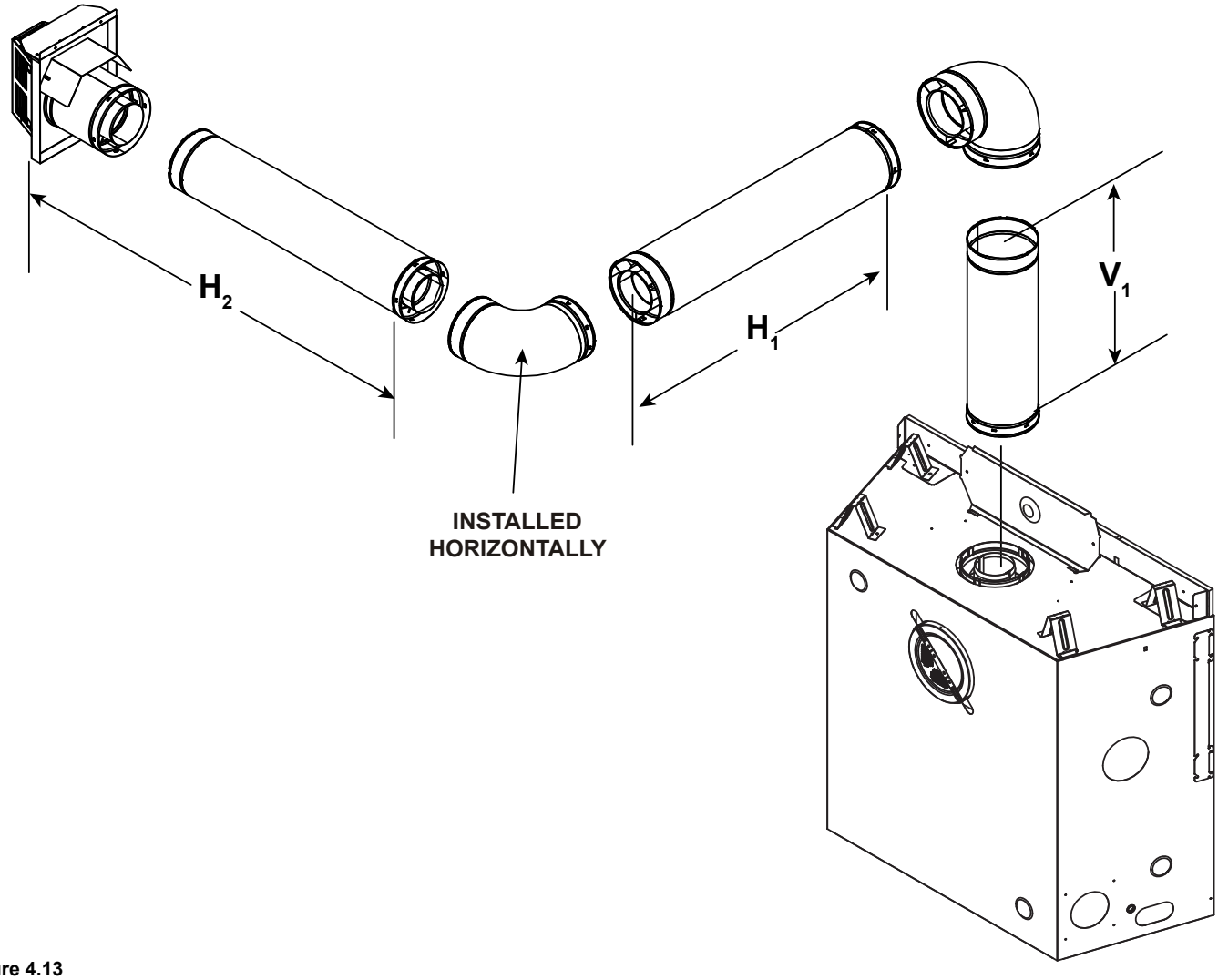

Figure 4.13

Three Elbows

Note: Use SLP Series components only.

Note: There MUST be a 25% reduction in total H when using flex vent except when using the simple up and out installation. See Figure 4.8.

V_1 Minimum		H_1 Maximum		$H_1 + H_2$ Maximum		V_2	$V_1 + V_2$ Minimum
		All Models				*	*
Elbow only**		1 ft.	305 mm	2 ft.	610 mm	*	*
1/2 ft.**	152 mm	2 ft.	610 mm	4 ft.	1.2 m	*	*
1-1/2 ft.**	457 mm	3 ft.	914 mm	6 ft.	1.8 m	*	*
2-1/2 ft.**	762 mm	5 ft.	1.5 m	10 ft.	3.0 m	*	*
3-1/2 ft.	1.1 m	7 ft.	2.1 m	14 ft.	4.3 m	*	*
4-1/2 ft.	1.4 m	14 ft.	4.3 m	14 ft.	4.3 m	*	*

$V_1 + H_1 + V_2 + H_2$ Maximum = 40 ft. (12.2 m)

*No specific restrictions on this value EXCEPT $V_1 + V_2 + H_1 + H_2$ CANNOT exceed 40 ft. (12.2 m)

** See warning below

⚠ WARNING **

Fire Risk.

- When using SLP-HRC-SS termination cap on top vented fireplaces, a one foot minimum vertical vent section is required before installing first elbow.

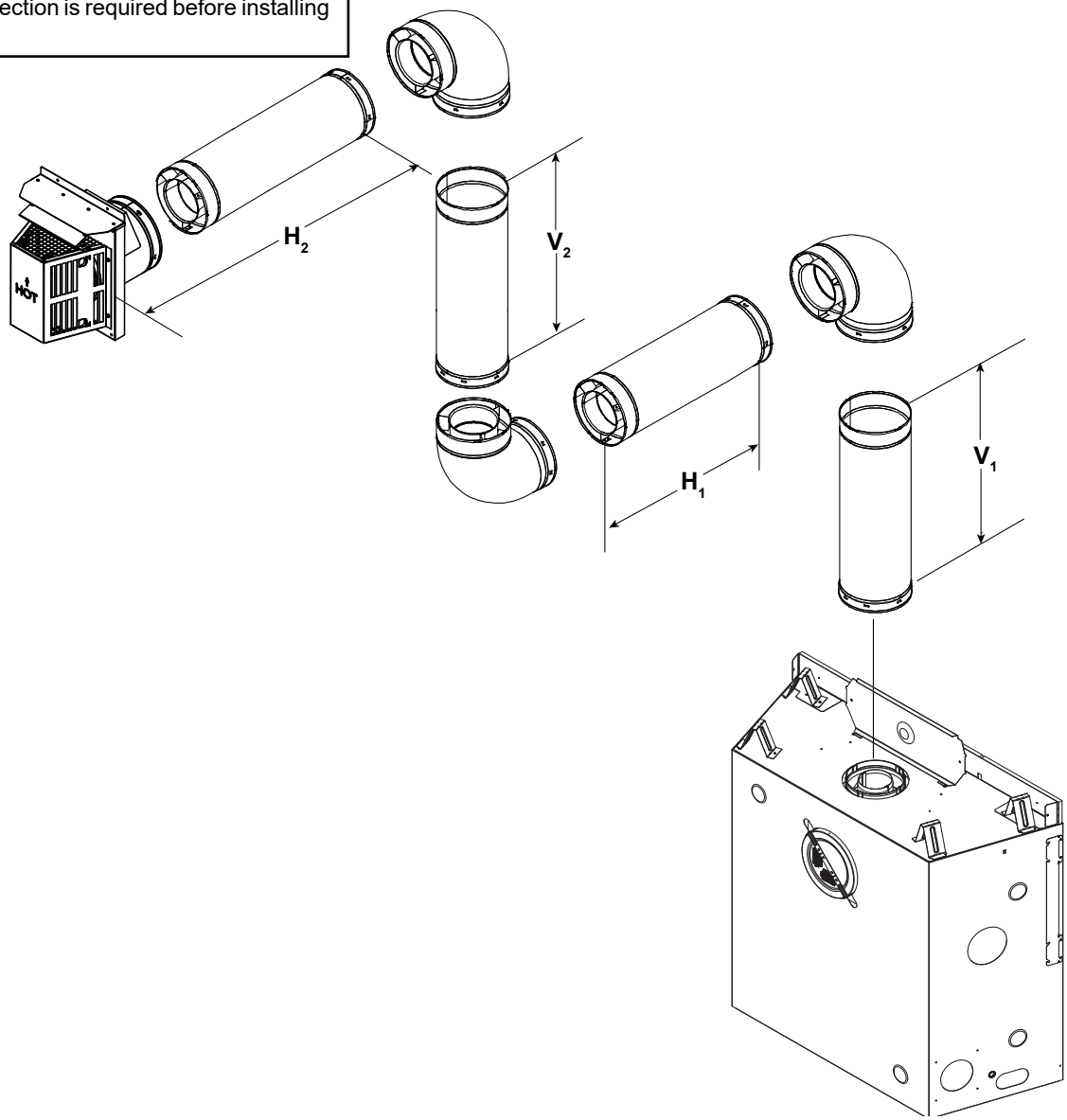

Figure 4.14

Top Vent - Vertical Termination

No Elbow

Note: Use SLP Series components only.

Note: If installing a vertical vent/termination off the top of the appliance, the optional vertical termination baffle may be needed.

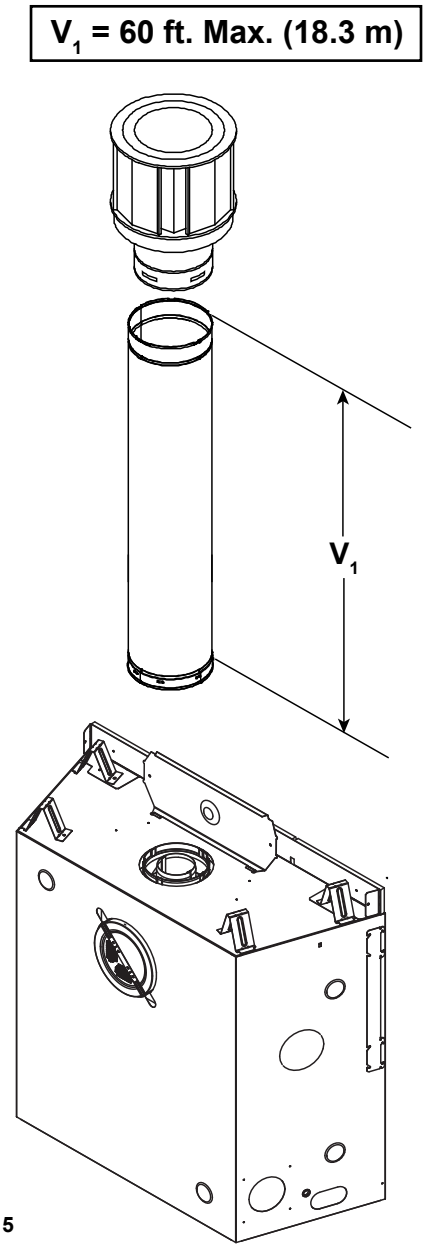

Figure 4.15

Exhaust Restrictor Instructions

Exhaust restrictors are recommended for these vertically terminated products which have excessive draft. Exhaust restrictors will compensate for high draft, and restore visual flame height. If the vent configuration has a total vertical of 15-60 feet, an exhaust restrictor may be needed. The exhaust restrictor is located in the appliance manual bag.

Note: Remove top refractory piece, if installed.

Refer to instructions supplied with the refractory liner kit.

1. Install the exhaust restrictor over the center of the exhaust outlet in the firebox. See Figure 4.16.
2. Center the exhaust restrictor in the open end of the exhaust outlet and secure through the slots on the exhaust restrictor with the two 1/4 in. self tapping screws provided in the appliance manual bag.
3. Reinstall top refractory.

Note: Be sure to reinstall the top refractory piece after exhaust restrictor installation.

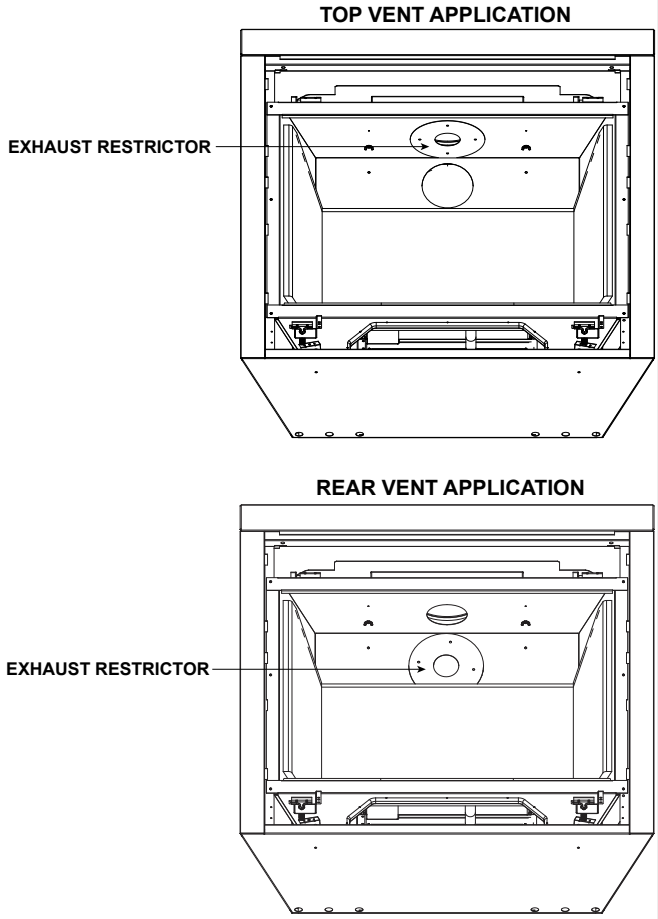

Figure 4.16 Exhaust Restrictor Installation (Top Refractory Panel Removed to Aid in Visual Clarity)

Two Elbows

Note: Use SLP Series components only.

Note: There MUST be a 25% reduction in total H when using flex vent except when using the simple up and out installation. See Figure 4.8.

ALL MODELS					
V_1 Minimum		H_1 Maximum		V_2	$V_1 + V_2$ Minimum
90º Elbow		1 ft.	305 mm	*	*
1/2 ft.	152 mm	2 ft.	610 mm	*	*
1-1/2 ft.	457 mm	3 ft.	914 mm	*	*
2-1/2 ft.	762 mm	5 ft.	1.5 m	*	*
3-1/2 ft.	1.1 m	7 ft.	2.1 m	*	*
4-1/2 ft.	1.4 m	15 ft.	4.6 m	*	*
H_1 Maximum= 15 ft. (4.6 m) $V_1 + V_2 + H_1$ Maximum = 40 ft. (12.2 m) *No specific restrictions on this value EXCEPT $V_1 + V_2 + H_1$ CANNOT exceed 40 ft. (12.2 m)					

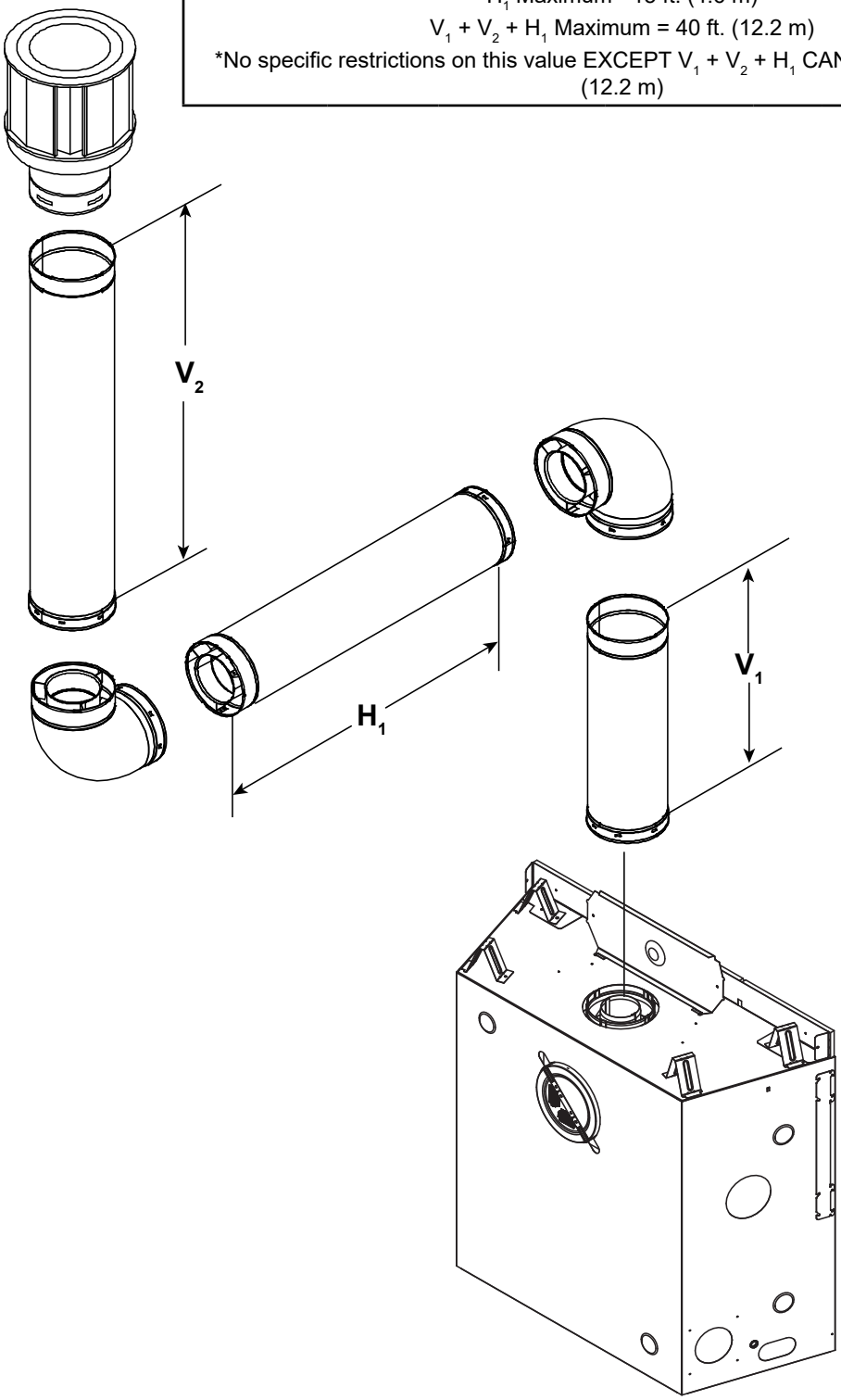

Figure 4.17

Top Vent - Vertical Termination - (continued)

Three Elbows

Note: Use SLP Series components only.

Note: There MUST be a 25% reduction in total H when using flex vent except when using the simple up and out installation. See Figure 4.8.

ALL MODELS							
V_1		$H_1 + H_2$ Maximum		V_2		$V_1 + V_2$ Minimum	
90º Elbow		0	0	1-1/2 ft.	457 mm	1-1/2 ft.	457 mm
1/2 ft..	152 mm	1 ft.	305 mm	*	*	*	*
1-1/2 ft.	457 mm	2 ft.	610 mm	*	*	*	*
2-1/2 ft.	762 mm	4 ft.	1.2 m	*	*	*	*
3-1/2 ft.	1.1 m	6 ft.	1.8 m	*	*	*	*
4-1/2 ft.	1.4 m	14 ft.	4.3 m	*	*	*	*
H_1 Maximum = 14 ft. (4.3 m) *No specific restrictions on this value EXCEPT $V_1 + V_2 + H_1 + H_2$ CANNOT exceed 40 ft. (12.2 m).							

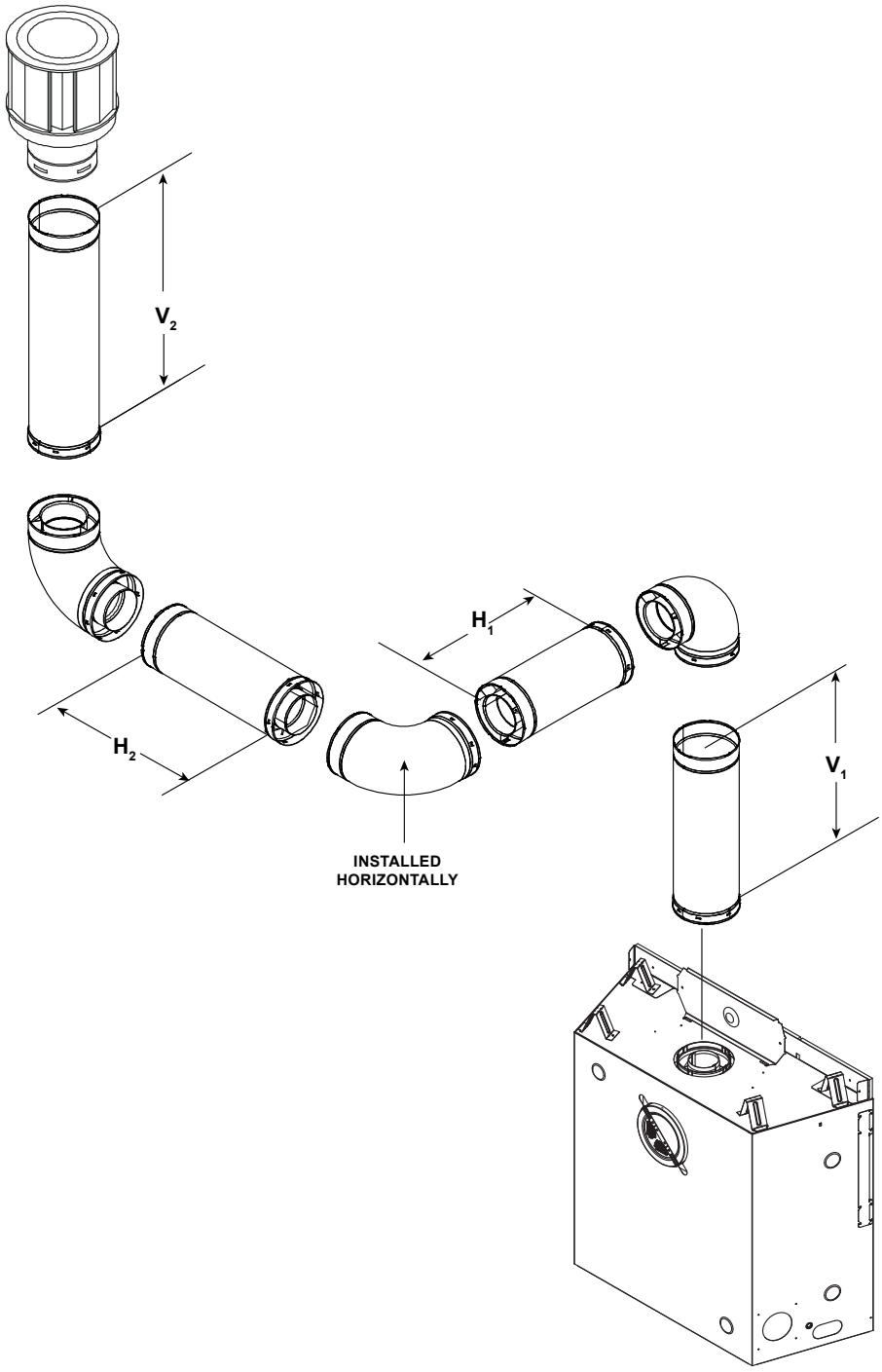

Figure 4.18

Top Vent - Vertical Termination - (continued)

Four 90º Elbows

Note: There MUST be a 25% reduction in total H when using flex vent except when using the simple up and out installation. See Figure 4.8.

ALL MODELS									
V_1 Min.		H_1 Max.		V_2 Min.		H_2 Max.		V_3 Min.	
1-1/2 ft.	457 mm	4 ft.	1.2 m	4 ft.	1.2 m	4 ft.	1.2 m	3-1/2 ft.	1.0 m
$V_1 + V_2 + V_3 + H_1 + H_2$ Maximum= 40 ft. (12.2 m)									

Note: Use SLP Series components only.

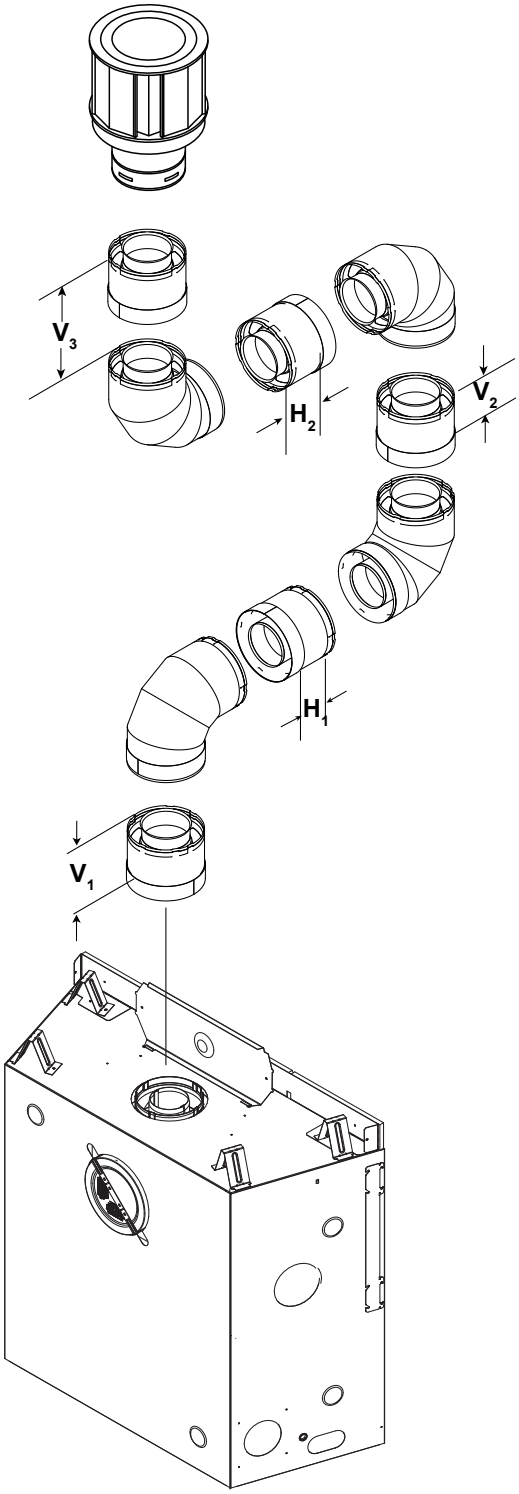

Figure 4.19

Rear Vent - Horizontal Termination

No Elbow

ALL MODELS
H_1 = 24 in. (610 mm) Maximum

Note: Use DVP Series components only.

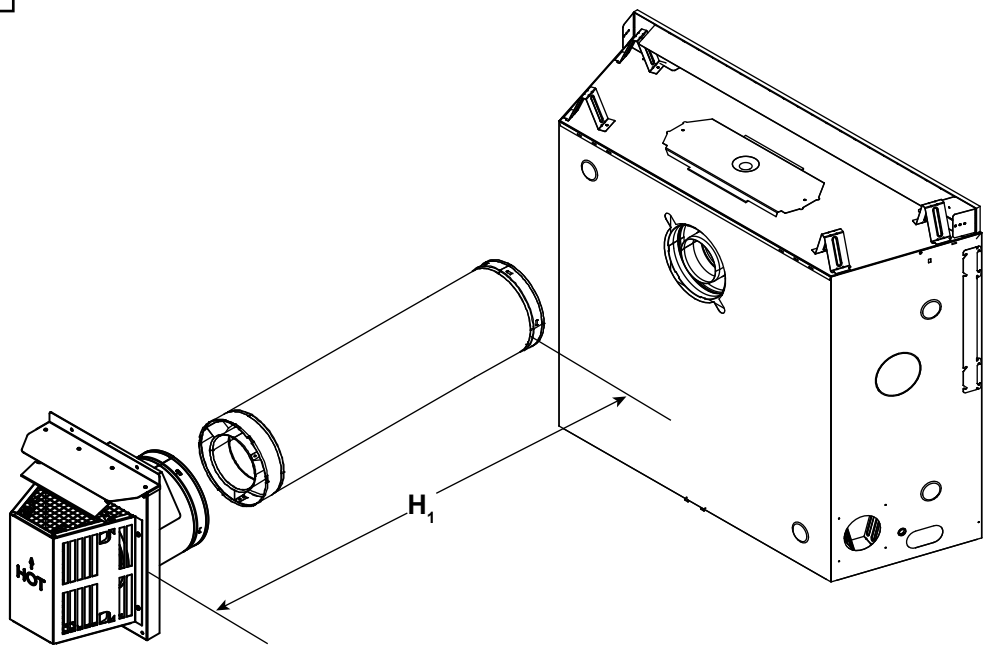

Figure 4.20

Two 90º Elbows

Must use two 90º elbows for corner installations. The use of two 90º elbows in a corner installation will affect space requirements. See Section 3.C. Use of 45º elbow not allowed.

Note: Use DVP Series components only.

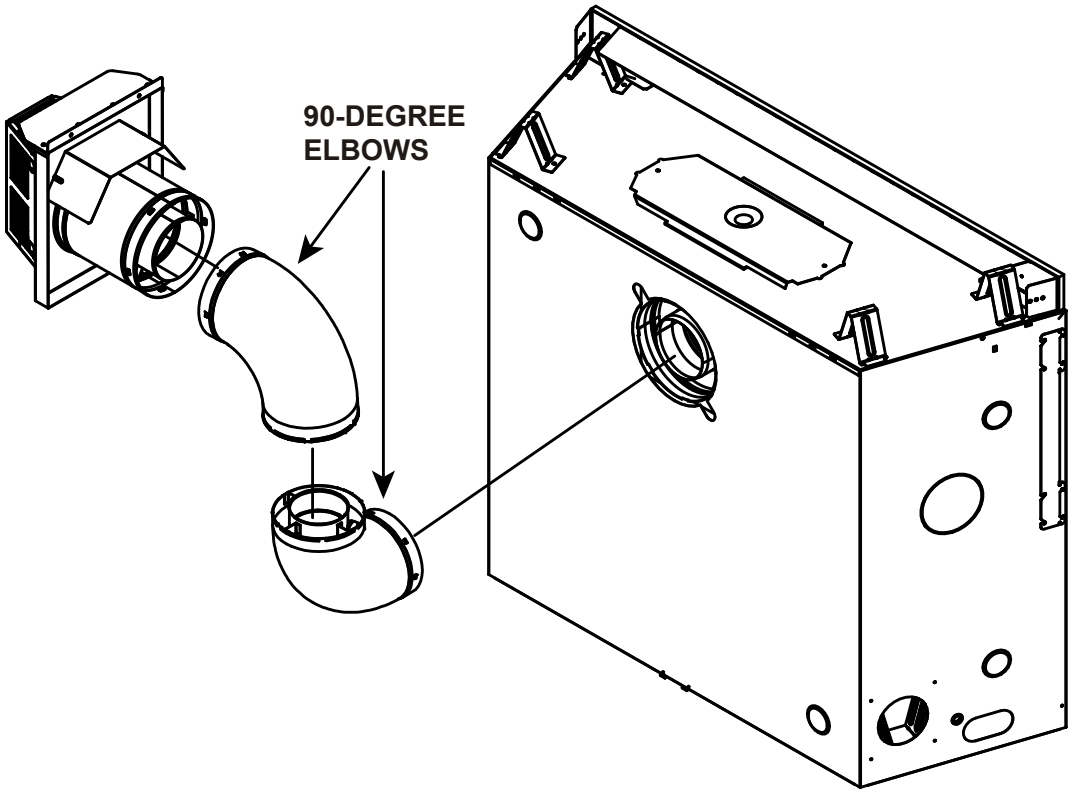

Figure 4.21

Two Elbows

Note: Use DVP Series components only.

ALL MODELS							
H_1 Maximum		V_1 Minimum		H_2		$H_1 + H_2$ Maximum	
1-1/2 ft.	457 mm	Back to Back Elbows		1 ft.	305 mm	2-1/2 ft.	762 mm
3-1/2 ft.	1.1 m	1 ft.	305 mm	3 ft.	914 mm	6-1/2 ft.	2.0 m
5-1/2 ft.	1.7 m	2 ft.	610 mm	5 ft.	1.5 m	10-1/2 ft.	3.2 m
7-1/2 ft.	2.3 m	3 ft.	914 mm	6-1/2 ft.	2.1 m	14 ft.	4.3 m
H_1 Maximum = 7-1/2 ft. (2.3 m) $H_1 + H_2$ Maximum = 14 ft. (4.3 m) $V_1 + H_1 + H_2$ = 40 ft. (12.2 m)							

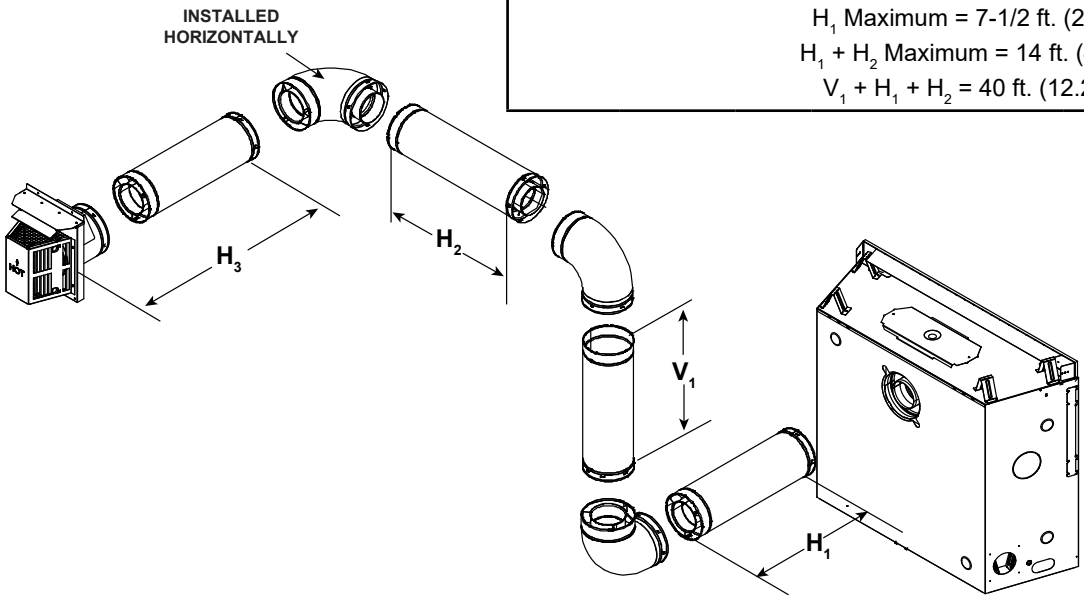

Figure 4.22

Three Elbows

Note: Use DVP Series components only.

ALL MODELS							
H_1 Maximum		V_1 Minimum		$H_2 + H_3$		$H_1 + H_2 + H_3$ Maximum	
1-1/2 ft.	457 mm	Back to Back Elbows		1 ft.	305 mm	2-1/2 ft.	762 mm
3-1/2 ft.	1.1 m	1 ft.	305 mm	2 ft.	610 mm	5-1/2 ft.	1.7 m
5-1/2 ft.	1.7 m	2 ft.	610 mm	4 ft.	1.2 m	9-1/2 ft.	2.9 m
7-1/2 ft.	2.3 m	3 ft.	914 mm	6 ft.	1.8 m	13-1/2 ft.	4.1 m
H_1 Maximum = 7-1/2 ft. (2.3 m) $H_1 + H_2 + H_3$ Maximum =13-1/2 ft. (4.1 m) $V_1 + H_1 + H_3$ = 40 ft. (12.2 m)							

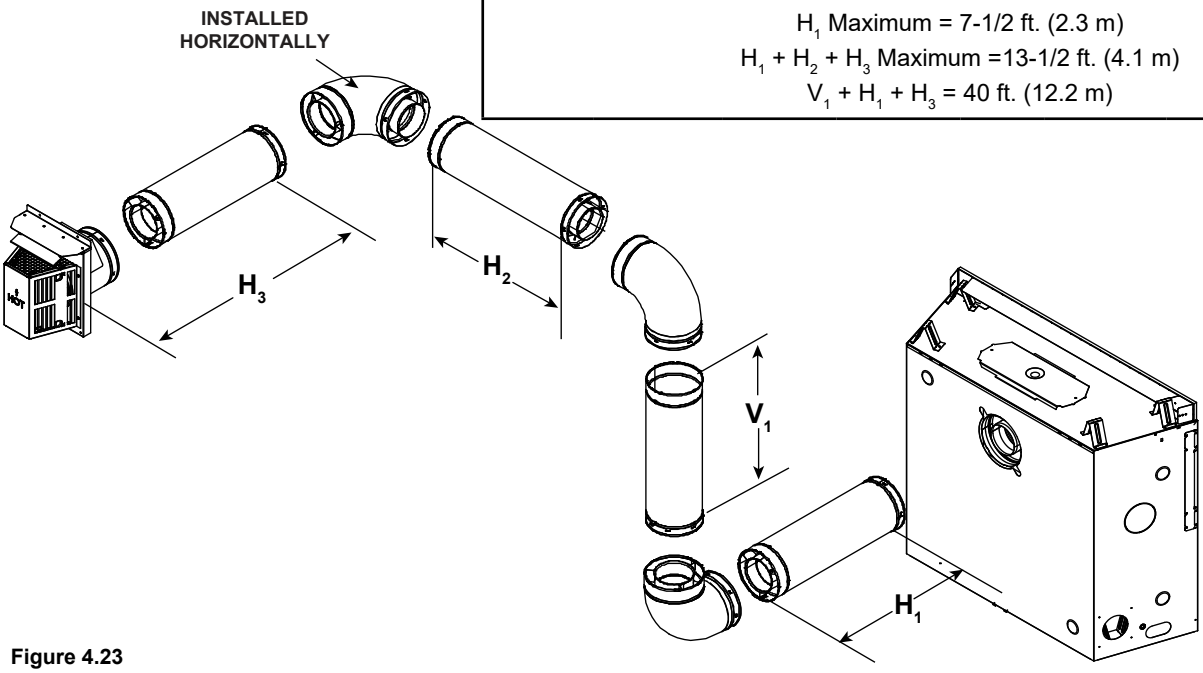

Figure 4.23

Rear Vent - Vertical Termination

One Elbow

Note: Use DVP Series components only.

ALL MODELS			
V_1 Minimum		H_1 Maximum	
Elbow Only		1-1/2 ft.	457 mm
1 ft.	305 mm	3-1/2 ft.	1.1 m
2 ft.	610 mm	5-1/2 ft.	1.7 m
3 ft.	914 mm	7-1/2 ft.	2.3 m
H_1 Maximum = 7-1/2 ft. (2.3 m) $V_1 + H_1$ Maximum = 40 ft. (12.2 m)			

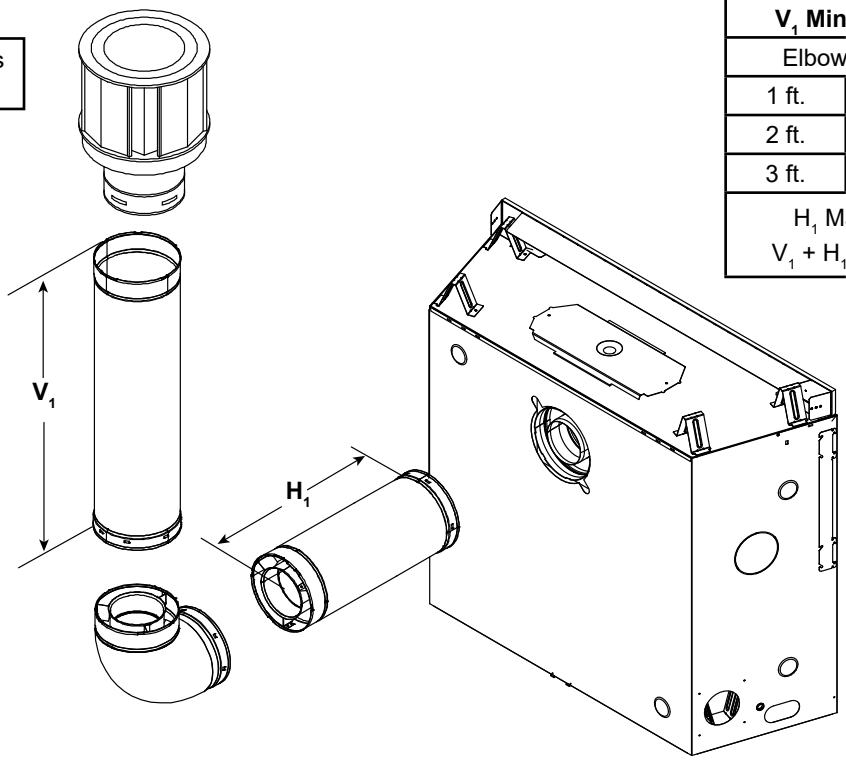

Figure 4.24

Two Elbows

Note: Use DVP Series components only.

ALL MODELS			
$H_1 + H_2$ Maximum		V_1 Minimum	
1/2 ft.	152 mm	Back to Back Elbows	
2-1/2 ft.	762 mm	1 ft.	305 mm
4-1/2 ft.	1.4 m	2 ft.	610 mm
6-1/2 ft.	2.0 m	3 ft.	914 mm
H Maximum = 6-1/2 ft. (2 m) $V_1 + H_1 + H_2$ Maximum = 40 ft. (12.2 m)			

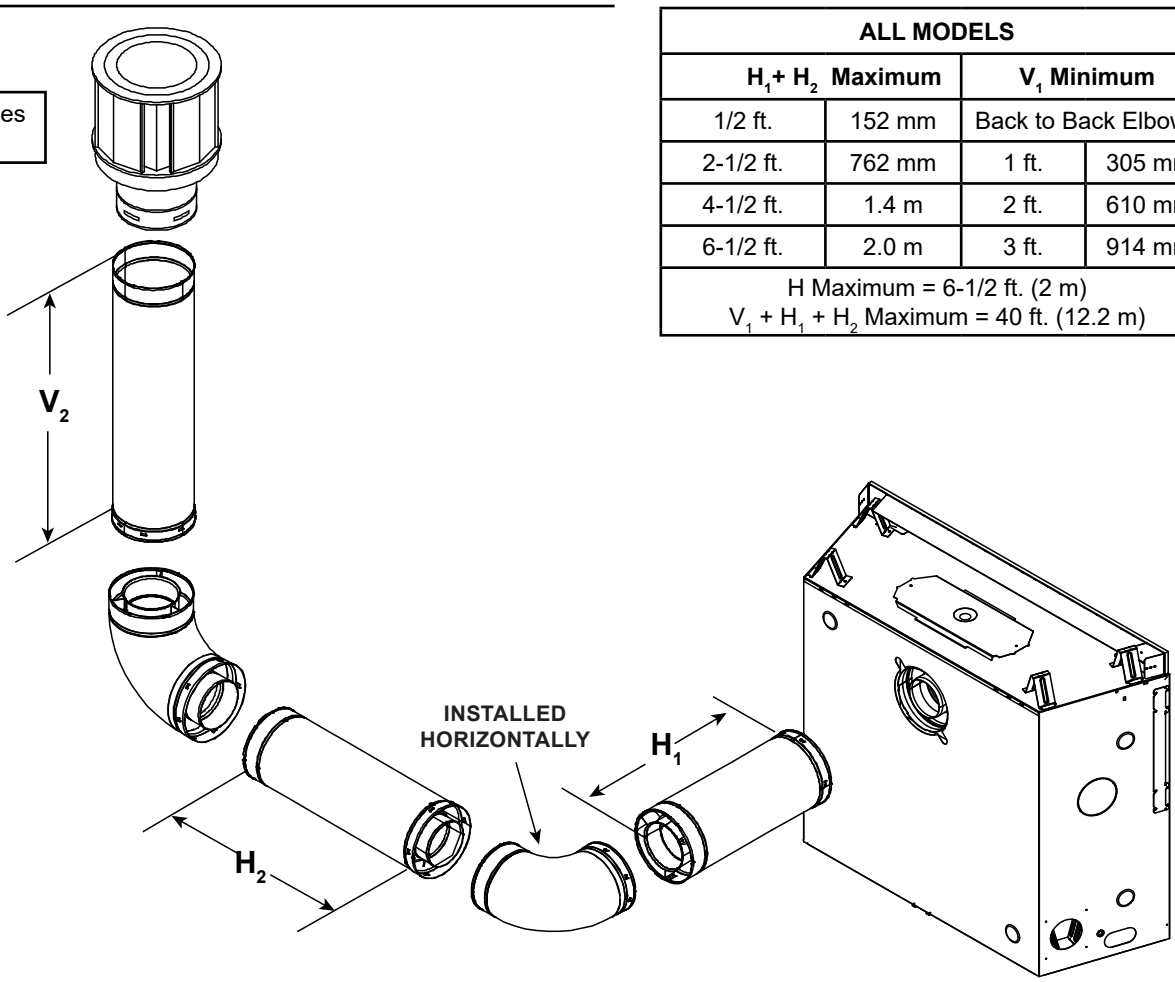

Figure 4.25

Three Elbows

Note: Use DVP Series components only.

ALL MODELS							
H_1 Maximum		V_1 Minimum		H_2		$H_1 + H_2$ Maximum	
1-1/2 ft.	457 mm	Back to Back Elbows		1 ft.	305 mm	2-1/2 ft.	762 mm
3-1/2 ft.	1.1 m	1 ft.	305 mm	3 ft.	914 mm	6-1/2 ft.	2.0 m
5-1/2 ft.	1.2 m	2 ft.	610 mm	5 ft.	1.5 m	10-1/2 ft.	3.2 m
7-1/2 ft.	2.3 m	3 ft.	914 mm	7 ft.	2.1 m	14-1/2 ft.	4.4 m
H_1 Maximum = 7-1/2 ft. (2.3 m) $V_1 + V_2 + H_1 + H_2$ Maximum = 40 ft. (12.2 m)							

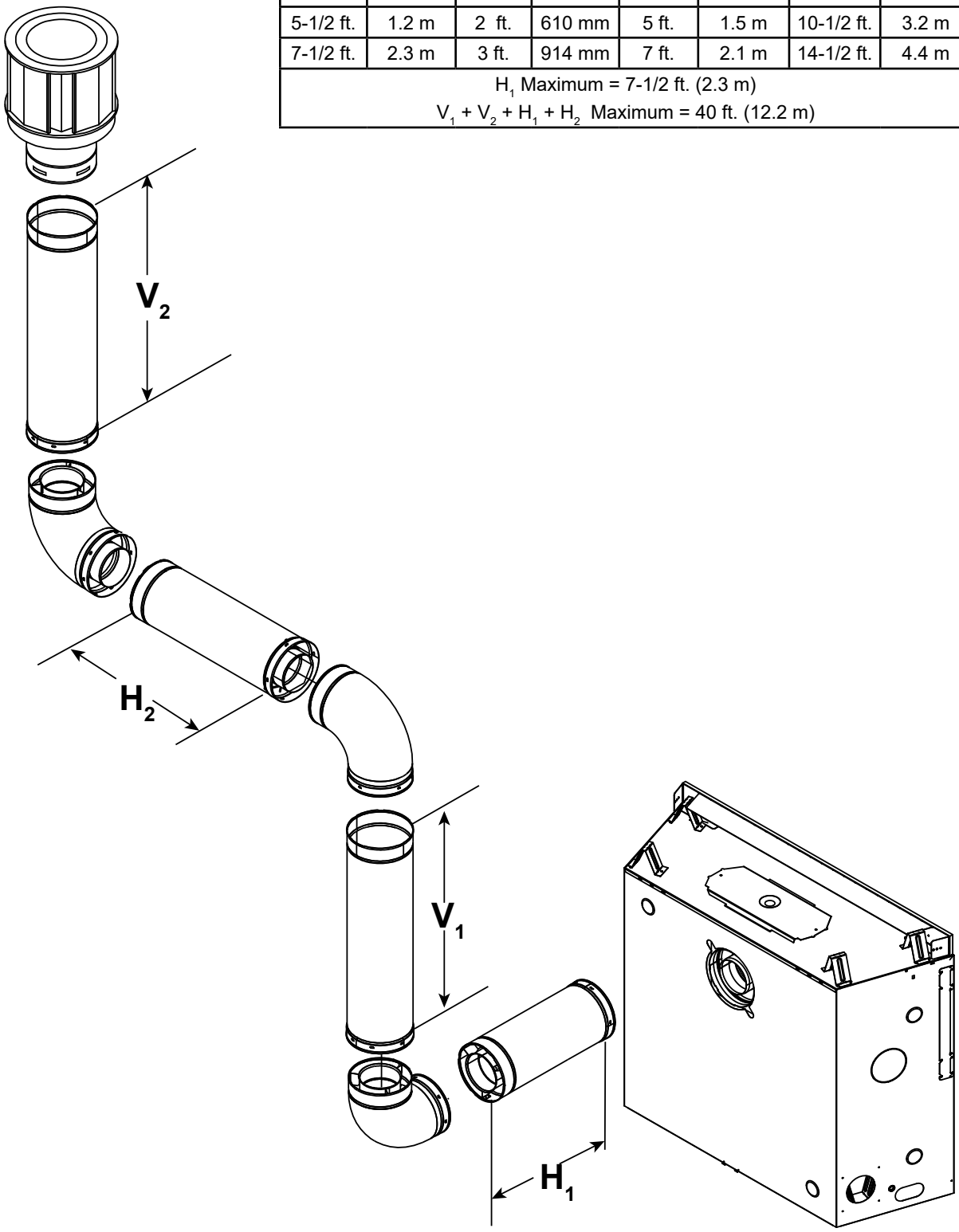

Figure 4.26

Coaxial to Colinear Venting

WARNING! Risk of Fire! *Coaxial to colinear venting configuration may only be used in existing non-combustible chimney. Installation in any other venting application could cause fire.*

The coaxial to colinear adapter (DV-46DVA-GCL) is approved for installations into solid fuel masonry or factory built fireplaces that have been installed in accordance with the National, Provincial, State and local building codes. The coaxial to colinear vent components are shown in Section 12.A. The DV-46DVA-GCL must be recessed into existing masonry fireplace. See Table 1 and Figure 4.28.

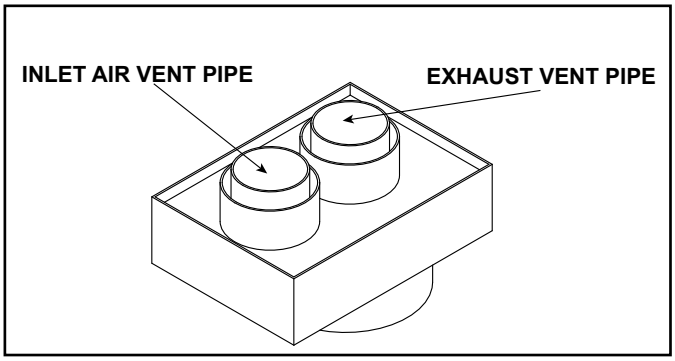

Figure 4.27 Coaxial/Colinear Appliance Connector

Prior to installing the gas appliance:

- Have the chimney and adjacent structure inspected and cleaned by qualified professionals. Hearth & Home Technologies recommends that NFI or CSIA certified professionals, or technicians under the direction of certified professionals, conduct a minimum of a NFPA 211 Level 2 inspection of the chimney.
- Replace component parts of the chimney and fireplace as specified by the professionals.
- Ensure all joints are properly engaged and the chimney is properly secured.

Table 1

CLEARANCE TO COMBUSTIBLES REQUIREMENTS	
DV-46DVA-GCL	3 IN.
Exhaust Vent Pipe	5 IN.

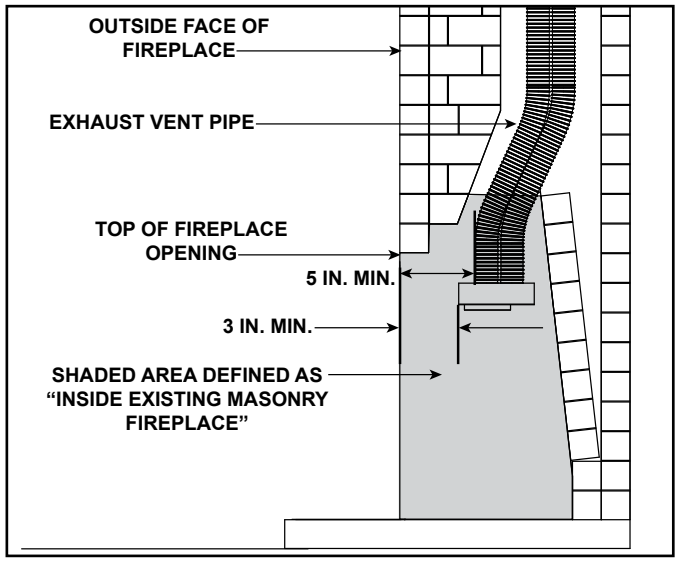

Figure 4.28 Existing Fireplace DV-46DVA-GCL Clearance Requirements

Clearances to Combustibles:

Refer to Section 3 and Section 10 for clearances to the appliance, mantel, mantel legs and wall projection.

Refer to Section 5 for pipe clearances to combustibles.

Termination Cap

For installation of termination cap see minimum vent heights for various pitched roofs. See Section 4.A.

Flue Damper

Fully lock the solid fuel fireplace's flue damper in the open position, OR completely remove it.

Venting Components

The LINK-DV30B is approved for use with the coaxial/colinear venting application. The LINK-DV30B kit includes:

- Two 30 foot sections of flexible vent pipe (3 inches Ø). One section is used to draw combustion air and the other section is used to expel exhaust gases.
- One vertical termination cap.

CAUTION! DO NOT use any flue restrictor when venting with the DV-46DVA-GCL adapter and LINK-DV30B kit. *This could result in poor flame appearance, sooting, pilot malfunction, or overheating.*

Connecting the DV-46DVA-GCL Adapter to Appliance

WARNING! Risk of Fire, Explosion or Asphyxiation! *Do NOT connect this gas appliance to a chimney flue serving a separate solid fuel or gas burning appliance.*

- *Could impair safe operation of this appliance or other appliances connected to the flue.*
- *Vent this appliance directly outside.*
- *Use separate vent system for this appliance.*

Top Vent

- Remove top seal cap and insulation if equipped. See Section 6, "Appliance Preparation." Attach the DV-46DVA-GCL adapter to the appliance starting collar with 3-1/2 in. self-tapping screws. See Figure 4.29.

Rear Vent

- Remove the rear seal cap and insulation if equipped. Connect the DVP-2SL adapter to the vertically positioned elbow. Follow installation instructions included with DVP-2SL kit. Secure DV-46DVA-GCL adapter to DVP-2SL with 3-1/2 in. self-tapping screws. See Figure 4.29.

Connecting the LINK-DV30B to the DV-46DVA-GCL Adapter

- Insert the two sections of flexible vent pipe down the existing chimney.
- Attach one 3 ft section of stainless steel flex pipe to the exhaust collar on top of the DV-46DVA-GCL adapter with three screws.
- Attach one section of flexible vent pipe to the 3 ft stainless steel flex pipe with three self-tapping screws.
- Attach one section of flexible vent pipe to the inlet collar on top of the DV-46DVA-GCL adapter with three self-tapping screws.
- To minimize cold air drafts, seal around the flex vents at the damper inside the chimney with non-combustible unfaced fiberglass or rock wool insulation.

The DV-46DVA-GCL adapter must be recessed into existing masonry fireplace. This measurement is taken from the top of the fireplace opening. See Table 1 and Figure 4.28.

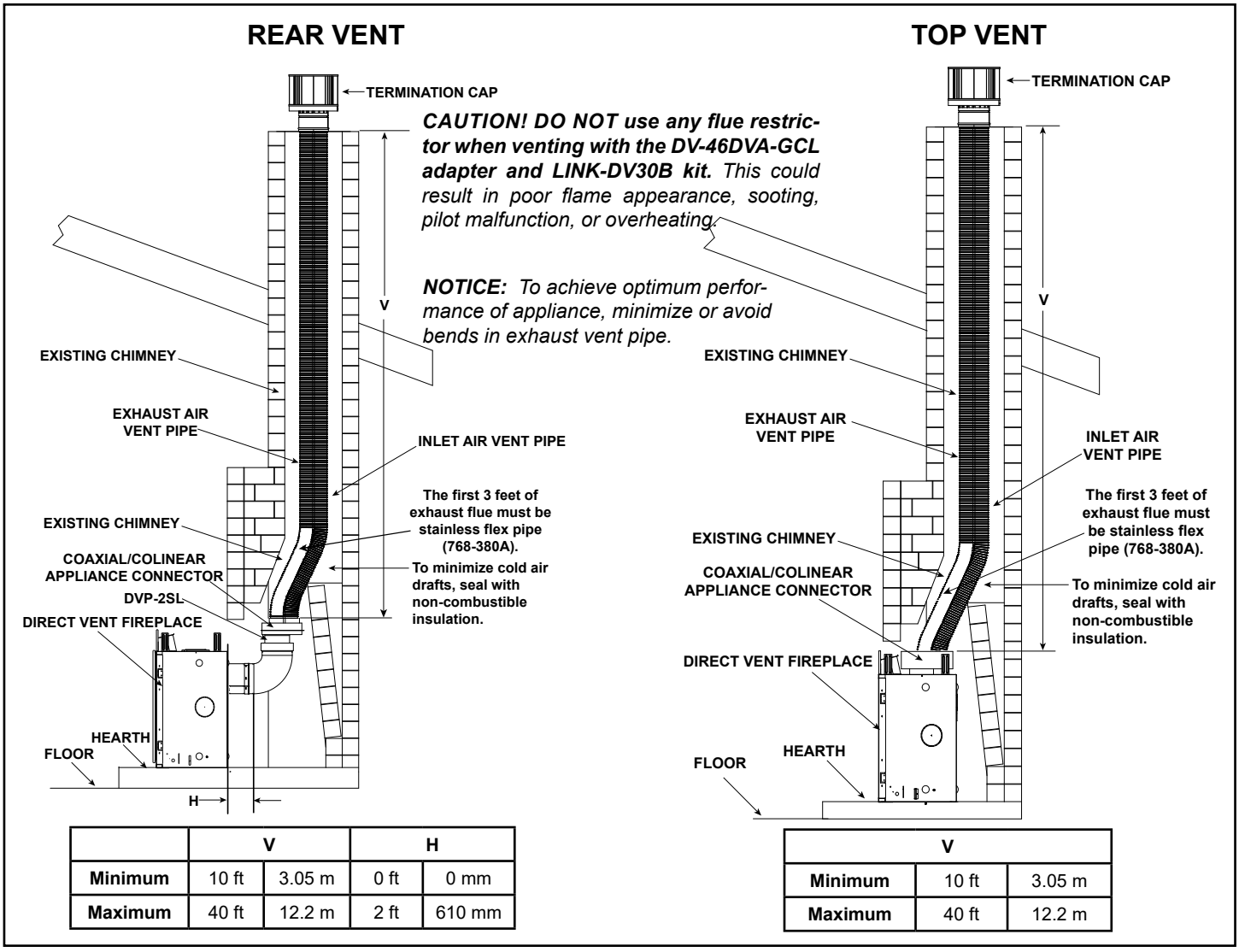

	V		H	
Minimum	10 ft	3.05 m	0 ft	0 mm
Maximum	40 ft	12.2 m	2 ft	610 mm

	V	
Minimum	10 ft	3.05 m
Maximum	40 ft	12.2 m

Figure 4.29

5 Vent Clearances and Vent Framing

A. Vent Clearances to Combustibles

WARNING! Risk of Fire! *Maintain air space clearance to vent.* ***DO NOT*** *pack insulation or other combustibles:*

- *Between ceiling firestops*
- *Between wall shield firestops*
- *Around vent system*

Failure to keep insulation or other material away from vent pipe could cause overheating and fire.

Note: Heat shields MUST overlap by a minimum of 1-1/2 in. (38 mm).
- **DVP heat shield** - designed to be used on a wall 4 in. to 7-1/4 in. (102 mm to 184 mm) thick.
- If wall thickness is less than 4 in. the existing heat shields must be field trimmed. If wall thickness is greater than 7-1/4 in. a DVP-HSM-B will be required.
- **SLP heat shield** - designed to be used on a wall 4-3/8 in. to 7-5/8 in. (111 mm to 194 mm thick).
- If wall thickness is less than 4-3/8 the existing heat shields must be field trimmed. If wall thickness is greater than 7-5/8 in. a DVP-HSM-B will be required.

(DVP-SLP Pipe Shown)

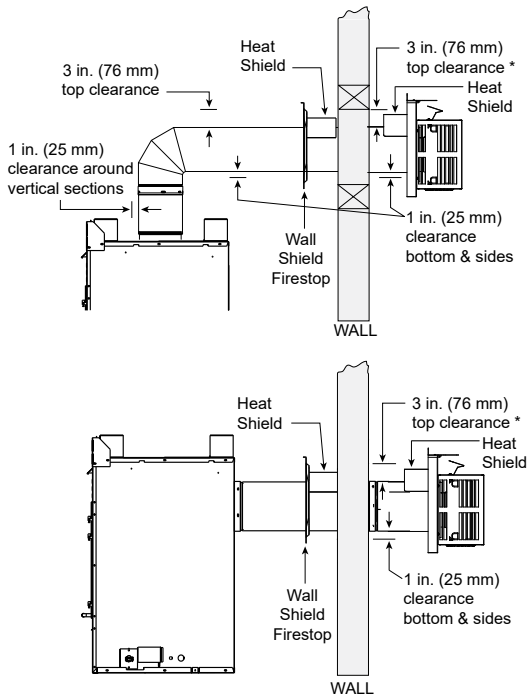

* When using SLP pipe, minimum clearances from the vent pipe to combustible materials at inside wall firestops are: Top: 2-1/2 in. (64 mm)
Bottom: 1/2 in. (13 mm)
Sides: 1 in. (25 mm)

Figure 5.1 Horizontal Venting Clearances To Combustible Materials

Elbow and Offset Clearances to Combustibles

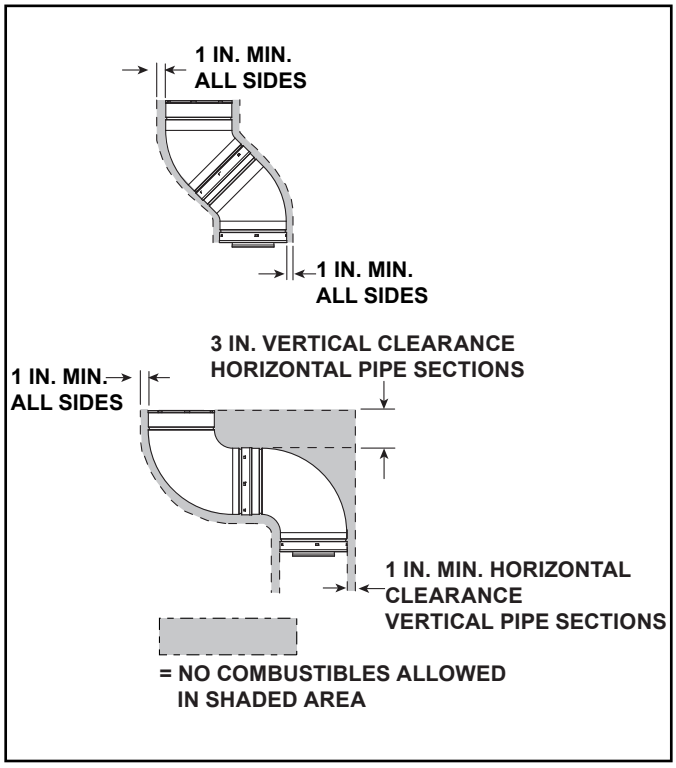

Figure 5.2 Clearances from Vent to Combustible Framing Materials

B. Wall Penetration Framing/Firestops

Combustible Wall Penetration

Whenever a combustible wall is penetrated, you must frame a hole for the wall shield firestop(s). The wall shield firestop maintains minimum clearances and prevents cold air infiltration.

These clearances are maintained by using an SLP-WS (SLP pipe) or DVP-WS (DVP pipe). See Figure 5.3 for framing instructions.

- For external walls: The wall shield firestop is included with the termination cap assembly.
- For internal walls: A wall shield firestop must be purchased and installed.
- The opening must be framed on all four sides using the same size framing materials as those used in the wall construction.
- SLP pipe - A wall shield firestop must be placed on each side of an interior wall. A minimum 1-1/2 in. (38 mm) overlap of attached heat shields must be maintained.
- DVP pipe - A wall shield firestop is required on one side only on interior walls. If your local inspector requires a wall shield firestop on both sides, then both wall shield firestops must have a heat shield (refer to Section 12.A) attached to them.
- See Section 7.F for information for regarding the installation of a horizontal termination cap.

Non-Combustible Wall Penetration

If the hole being penetrated is surrounded by non-combustible materials such as concrete, a hole with diameter one inch greater than the pipe is acceptable.

Whenever a non-combustible wall is penetrated, the wall shield firestop is only required on one side and no heat shield is necessary.

DO NOT PACK VENT FRAMING HOLE WITH INSULATION OR OTHER MATERIAL.

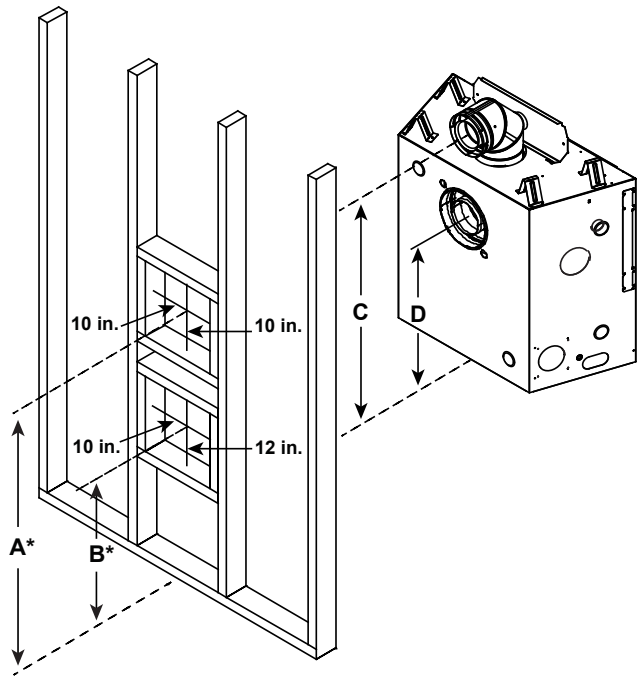

		A*	B*	C	D
QUARTZPLA36IN QUARTZPLA36IL	Inches	41	27-7/8	40	26-7/8
	Millimeters	1041	708	1016	683

* Shows center of vent framing hole for top or rear venting. The center of the hole is 1 inch (25 mm) above the center of the horizontal vent pipe.

Note: Center of the horizontal vent pipe to the vertical measuring surface of a trap cap is 5 inches (127 mm).

Figure 5.3 Wall Penetration

C. Ceiling Firestop/Floor Penetration Framing

WARNING! Risk of Fire! DO NOT pack insulation around the vent. Maintain clearances to vent to prevent overheating.

A ceiling firestop **MUST** be used between floors and attics.

- **DVP pipe only** - Frame an opening 10 in. by 10 in. (254 mm by 254 mm) whenever the vent penetrates a ceiling/floor (see Figure 5.4).
- **SLP pipe only** - Frame opening 9 in. x 9 in. (229 mm x 229 mm) whenever the vent penetrates a ceiling/floor (see Figure 5.4).
- Frame the area with the same sized lumber as used in ceiling/floor joist.
- The ceiling firestop may be installed above or below the ceiling joists when installed with an attic insulation shield. It must be under joists between floors that are not insulated. Refer to Figure 5.5.
- Secure in place with nails or screws.

D. Install Attic Insulation Shield

WARNING! Fire Risk. *The use of an attic shield is required to prevent loose materials or insulation from contacting the vent causing overheating and a fire.*

The International Fuel Gas Code requires an attic shield constructed of 26 gauge minimum steel that extends at least 2 in. (51 mm) above insulation.

- Attic insulation shields must meet specified clearances to combustible materials and be secured in place.
- An attic insulation shield kit is available from Hearth & Home Technologies. Contact your dealer to order. Install attic insulation shield according to instructions included with kit.

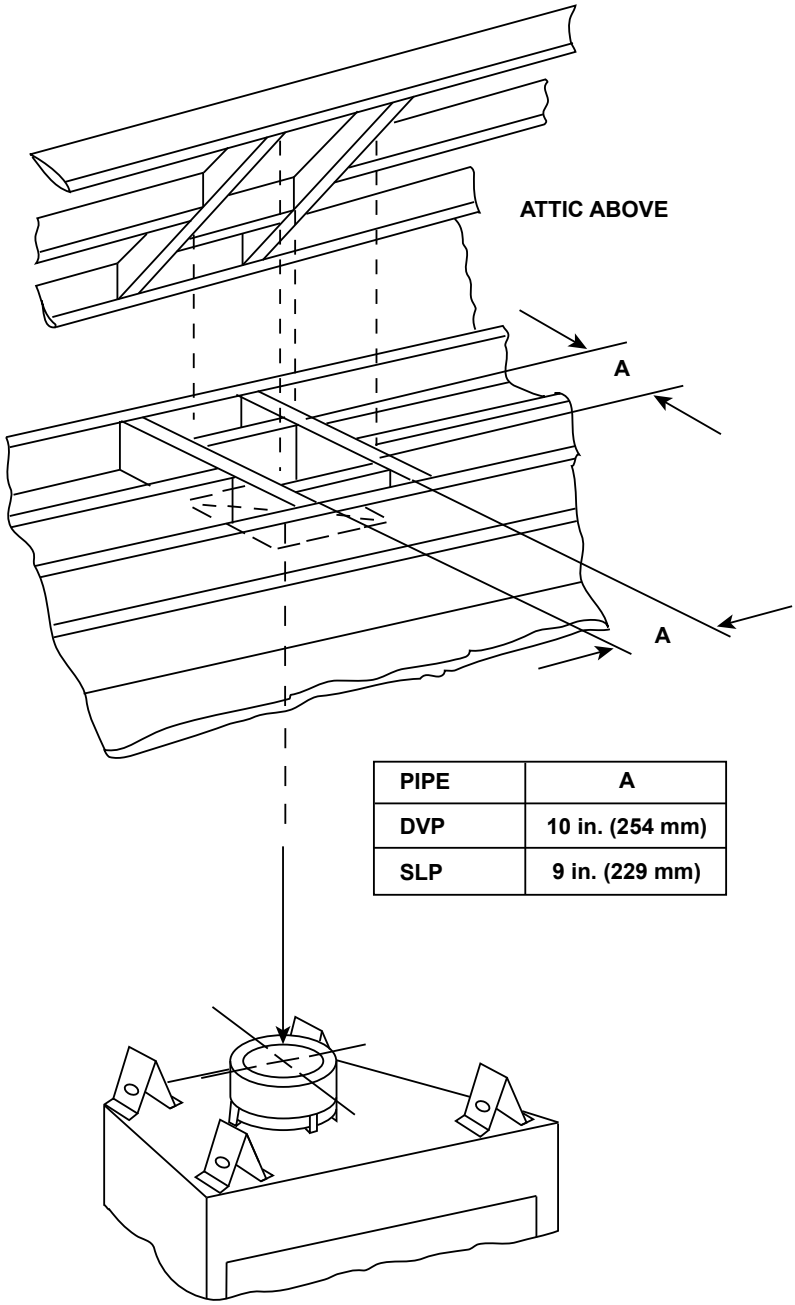

PIPE	A
DVP	10 in. (254 mm)
SLP	9 in. (229 mm)

Figure 5.4 Installing Ceiling Firestop

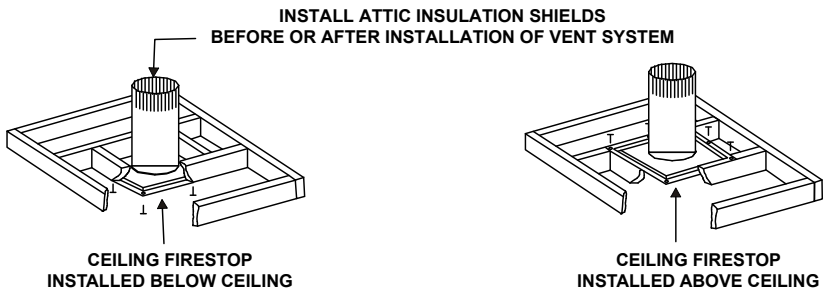

Figure 5.5 Installing the Attic Shield

6 Appliance Preparation

A. Vent Collar Preparation

CAUTION! Risk of Cuts, Abrasions or Flying Debris. *Wear protective gloves and safety glasses during installation. Sheet metal edges are sharp.*

NOTICE: *Once appliance is set up for top or rear venting, it CANNOT be changed at a later time.*

Top Vent

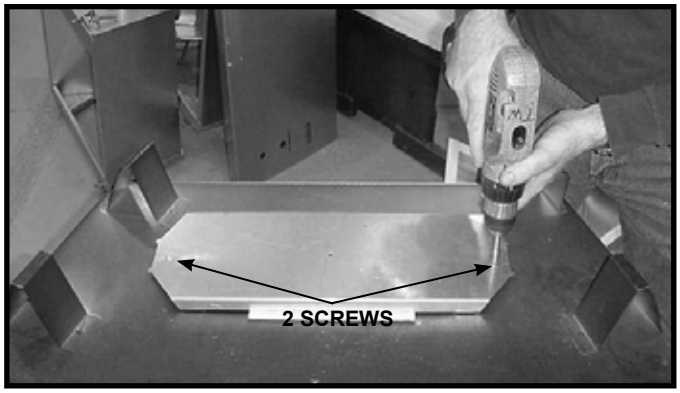

Figure 6.1 For top vent, remove the two screws holding the top heat shield in place. For rear vent, see next page.

WARNING! Risk of Fire! *Do not remove heat shield. Elevated header temperatures may cause a fire.*

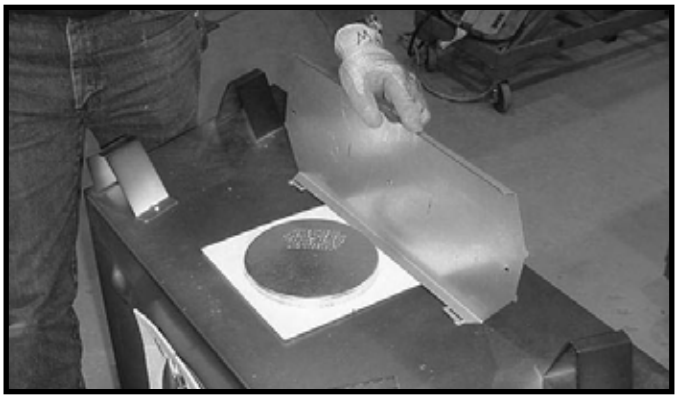

Figure 6.2 Rotate the top heat shield to the vertical position as shown above. The heat shield must remain in the vertical position.

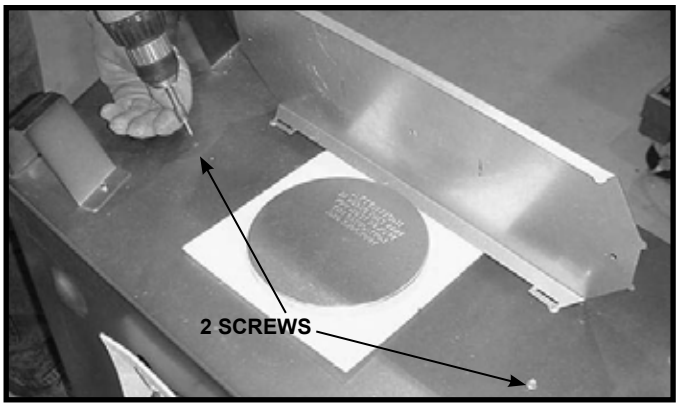

Figure 6.3 Replace the two screws as shown.

Note: Actual unit may look different than the fireplace shown in this section.

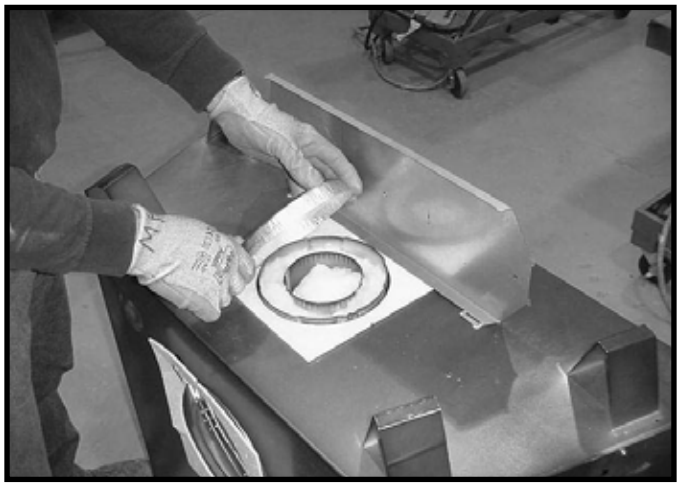

Figure 6.4 Remove the seal cap.

Figure 6.5 Remove the insulation basket and white insulation from the center vent pipe.

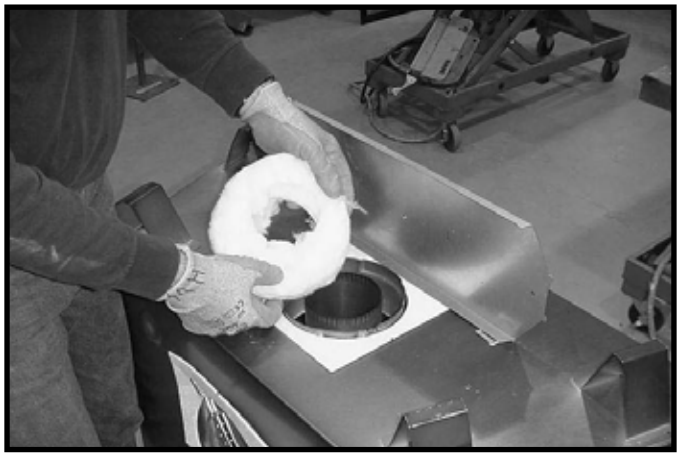

Figure 6.6 Remove the insulation from the outer vent pipe.

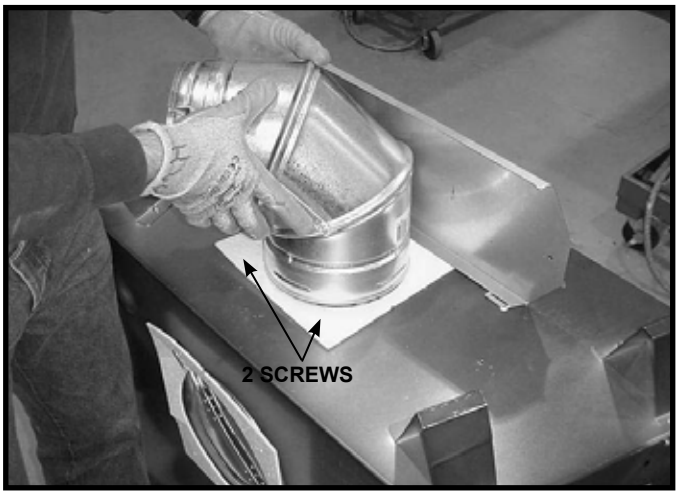

Figure 6.7 To attach the first section of vent pipe, make sure to use the fiberglass gasket to seal between the first vent component and the outer fireplace wrap. Use 2 self tapping screws to secure the gasket to the outer wrap.

Note: Once the seal cap has been removed, it cannot be reattached.

Rear Vent

NOTICE: *Once appliance is set up for top or rear venting, it CANNOT be changed at a later time.*

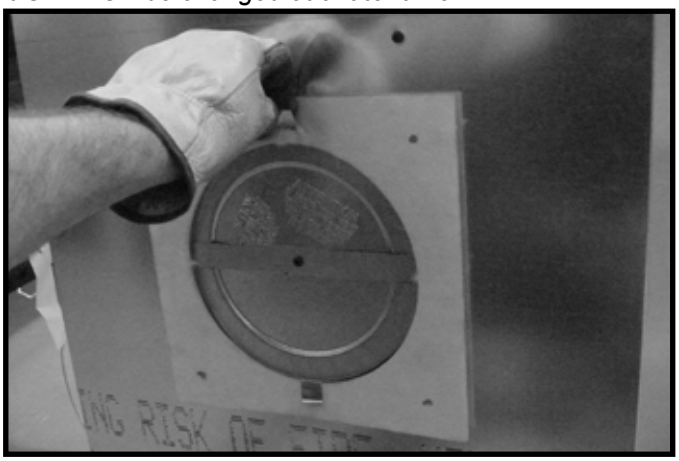

Figure 6.8 (Generic Fireplace Shown) Fold the tabs toward the center of the fire plug (90º) and remove the insulation gasket.

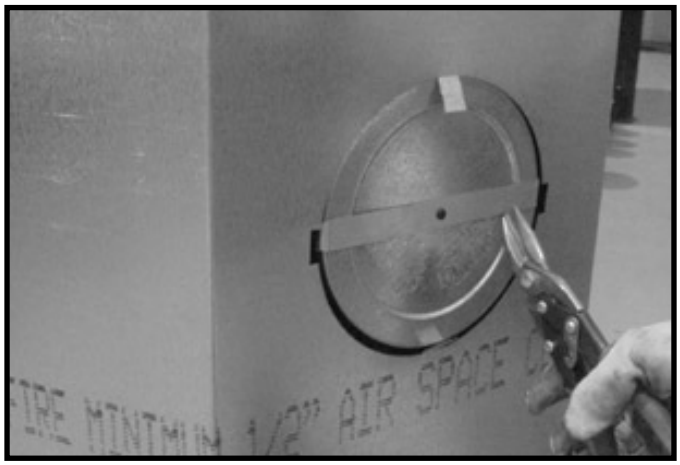

Figure 6.9 (Generic Fireplace Shown) Cut the metal retaining band and fold the sides out.

NOTICE: *Once the seal cap has been removed it CANNOT be reattached.*

Figure 6.10 (Generic Fireplace Shown) Fold the center parts of the retaining band out and use to remove the seal cap.

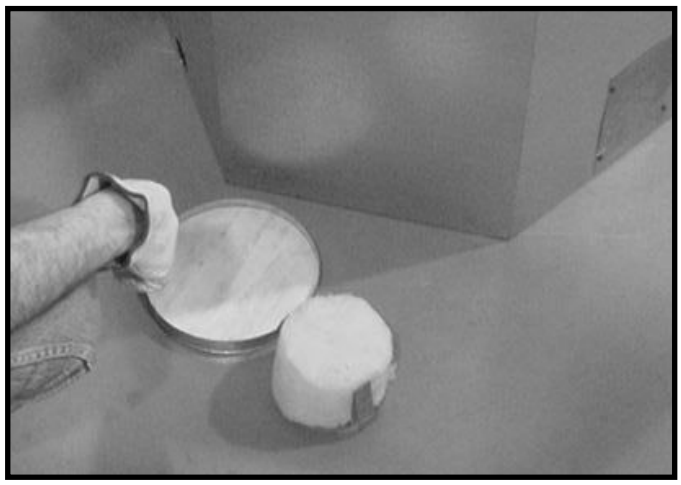

Figure 6.11 (Generic Fireplace Shown) Discard the seal cap, remove and discard the insulation basket. Note: Once the seal cap has been removed it CANNOT be reattached.

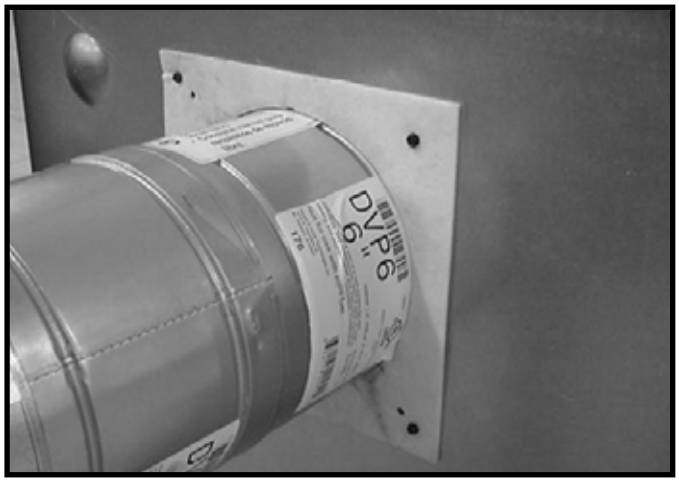

Figure 6.12 (Generic Fireplace Shown) Attach the first vent section (it will snap into place). Slide the insulation gasket onto the vent section, up against the appliance and over the tabs. Use two self-tapping screws to secure gasket to outer wrap.

B. Prepare For Heat Management

NOTICE: *Additional clearances are required for heat management systems installations. Provisions must be made in advance to ensure fit within the framing.*

- Heat management systems include Heat-Zone® Gas and Heat-Out-Gas. Other systems may be available. Contact your dealer for information.
- Locate the knockouts on the left and right sides of the appliance. Either one or two heat management may be installed. See Figure 6.13. Remove the knockout(s) from the appliance with a tin snips.
- Center the duct collar around the exposed hole and attach it to the appliance with 3 screws.

  Note: Do this BEFORE final positioning of the appliance.
- Determine the location for the air register/fan housing assembly.

Reference the appropriate instructions included with the kit for the remaining installation steps.

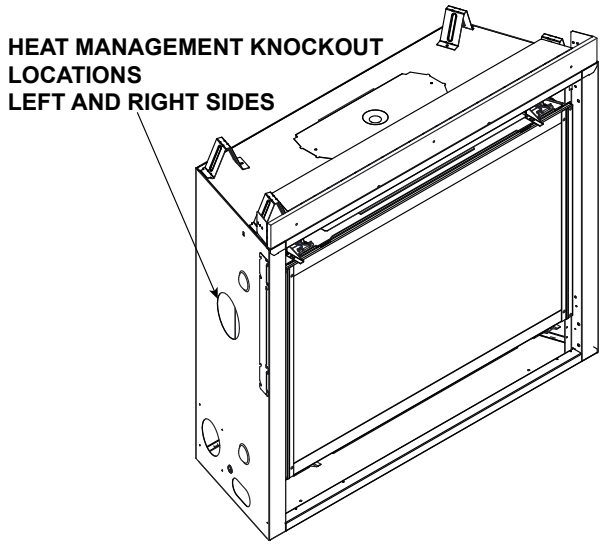

Figure 6.13 Heat Management Knockout Locations

C. Securing and Leveling the Appliance

⚠ WARNING

Risk of Fire!

Prevent contact with:

- *Sagging or loose insulation*
- *Insulation backing or plastic*
- *Framing and other combustible materials*

DO NOT remove standoffs or *notch the framing around the appliance standoffs.*

Failure to maintain air space clearance could cause overheating and fire.

Block openings into the chase to prevent entry of blown-in insulation. Make sure insulation and other materials are secured.

The diagram shows how to properly position and secure the appliance. See Figure 6.14. Nailing tabs are provided to secure the appliance to the framing members.

- Bend out nailing tabs on each side.
- Place the appliance into position.
- Keep nailing tabs flush with the framing.
- Level the appliance from side to side and front to back.
- “Square” the unit by securing diagonal dimensions to within 1/4 inch of each other. See Figure 6.15.
- Shim the appliance as necessary, keeping the bottom supported, level and straight. It is acceptable to use wood shims underneath the appliance.
- Place a level on top, sides and bottom as shown in Figure 6.14.
- Secure the appliance to the framing by using nails or screws through the nailing tabs. Use a minimum of one fastener per nailing tab.
- Optional: Secure the appliance to the floor by inserting two screws through the pilot holes at the bottom of the appliance.

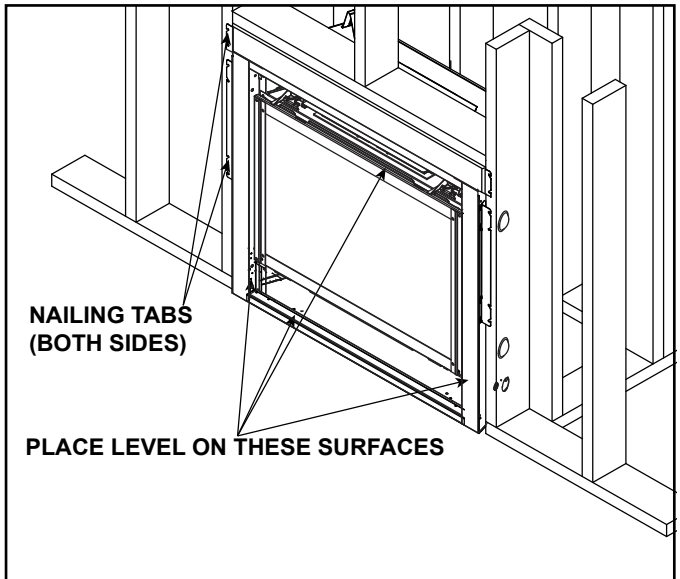

Figure 6.14 Proper Positioning and Securing of an Appliance

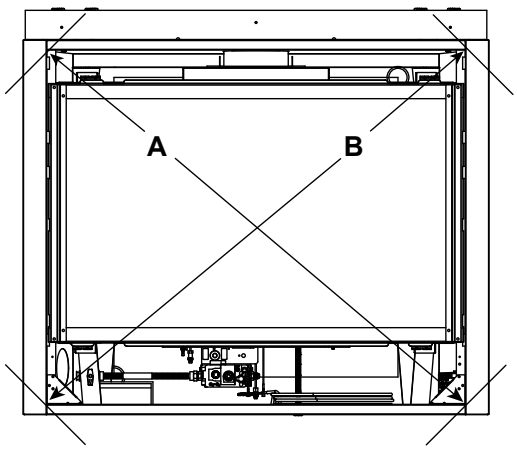

Note: Diagonal dimensions (A) and (B) must be within 1/4 inch of each other.

Figure 6.15 Positioning the Appliance Squarely

D. Non-Combustible Material (Factory-Installed)

WARNING! Risk of Fire! *DO NOT remove factory-installed non-combustible material.*

A non-combustible board is factory-installed above the fireplace opening. Do not remove.

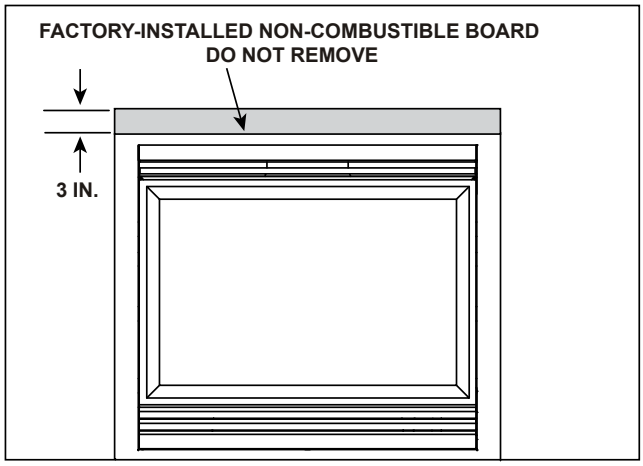

Figure 6.16 Facing Materials

7 Venting

A. Assemble Vent Sections

(DVP Pipe Only)

WARNING! Risk of Fire or Explosion! *Vent sections MUST be installed correctly. Improperly installed vent sections could leak or cause appliance to overheat.*

Attach Vent to the Firebox Assembly

Note: The end of the pipe sections with the lanced tabs will face toward the appliance.

Attach the first pipe section to the starting collar:

- Lanced pipe end of the starting collar.
- Inner pipe over inner collar.
- Push the pipe section until all lanced tabs snap in place.
- Lightly tug on pipe to confirm it has locked.

Required: Commercial, Multi-family (Multi-level exceeding two stories), or High-Rise Applications

Recommended: Vent Configurations with multiple pipe joints/pipe connections

WARNING! Risk of Fire or Explosion! DO NOT *break silicone seals on slip sections. Use care when removing termination cap from slip pipe. If slip section seals are broken during removal of the termination cap, vent could leak.*

All outer pipe joints must be sealed using one of the methods below, including the slip section that connects directly to the horizontal termination cap.

- Apply a bead of silicone sealant (300 ºF minimum continuous exposure rating) inside the female outer pipe joint prior to joining sections. See Figure 7.1 **OR**
- Apply a bead of silicone sealant (300 ºF minimum continuous exposure rating) to the outside of connecting joint after joining sections **OR**

  Apply aluminum foil tape (300 ºF minimum continuous exposure rating) to the outside of connecting joint after joining sections. On horizontal pipe runs, it is recommended that the tape seam is positioned on the bottom side of the vent pipe.
- Only outer pipes need to be sealed. All unit collar, pipe, slip section, elbow and cap outer flues shall be sealed in this manner, unless otherwise stated.

Assemble Pipe Sections

Per Figure 7.2:

- Start the inner pipe on the lanced end of section A into the flared end of section B.
- Start the outer pipe of section A over the outer pipe of section B.
- Once both vents sections are started, push firmly until all lanced tabs lock into place.
- Lightly tug on the pipe to confirm the tabs have locked.

It is acceptable to use screws no longer than 1/2 in. (13 mm) to hold outer pipe sections together. If predrilling holes, **DO NOT** penetrate inner pipe.

For 90º and 45º elbows that are changing the vent direction from horizontal to vertical, one screw minimum should be put in the outer flue at the horizontal elbow joint to prevent the elbow from rotating. Use screws no longer than 1/2 in. (13 mm). If predrilling screw holes, **DO NOT** penetrate inner pipe.

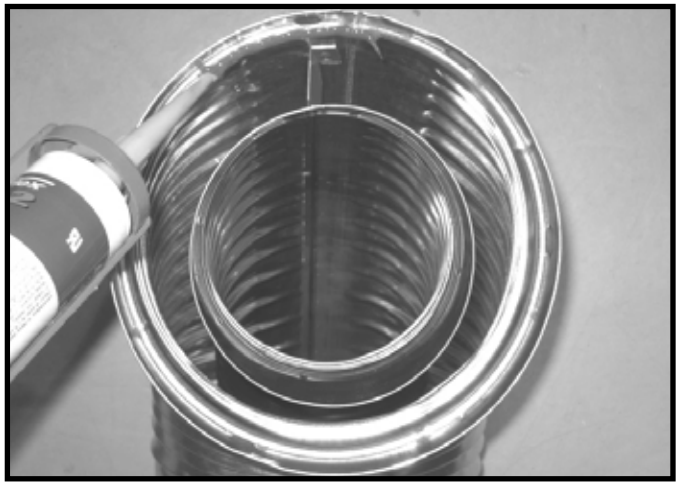

Figure 7.1 High Temperature Silicone Sealant

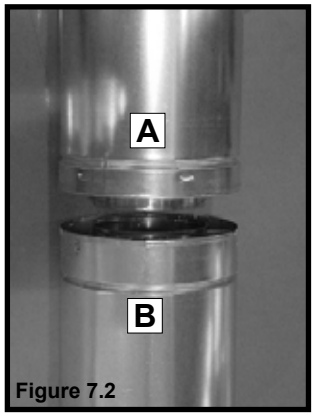

Figure 7.2

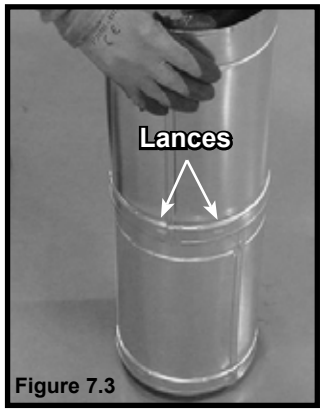

Figure 7.3

Note: Make sure that the seams are not aligned to prevent unintentional disconnection.

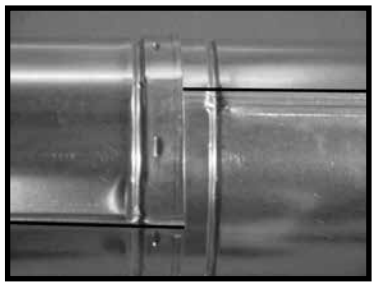

CORRECT

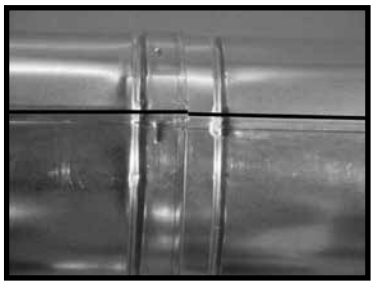

INCORRECT

Figure 7.4 Seams

NOTICE: *When installing a vent system with an HRC termination cap, all pipe system joints shall be sealed using a high temperature silicone sealant (300 ºF minimum continuous exposure rating).*

- *Apply a bead of silicone sealant (300 ºF minimum continuous exposure rating) inside the female outer pipe joint prior to joining sections.*
- *Only outer pipes are sealed, sealing the inner flue is not required.*
- *All unit collar, pipe, slip section, elbow and cap outer flues shall be sealed.*

Assemble Vent Sections (SLP Pipe Only)

WARNING! Risk of Fire or Explosion! *Vent sections MUST be installed correctly. Improperly installed vent sections could leak or cause appliance to overheat.*

To attach the first vent component to the starting collars of the appliance:

- Lock the vent components into place by sliding the pipe section onto the collar.
- Align the seam of the pipe and seam of collar to allow engagement. Rotate the vent component to lock into place. Use this procedure for all vent components. See Figure 7.5.
- Slide the gasket over the first vent section and place it flush to the appliance. This will prevent cold air infiltration. Caulk with a minimum of 300 ºF continuous exposure rating may be used to hold the part in place.
- Continue adding vent components, locking each succeeding component into place.
- Ensure that each succeeding vent component is securely fitted and locked into the preceding component.

It is acceptable to use screws no longer than 1/2 in. (13 mm) to hold outer pipe sections together. If predrilling holes, **DO NOT** penetrate inner pipe.

Required: Commercial, Multi-family (Multi-level exceeding two stories), or High-Rise Applications

Recommended: Vent Configurations with multiple pipe joints/pipe connections

WARNING! Risk of Fire or Explosion! DO NOT *break silicone seals on slip sections. Use care when removing termination cap from slip pipe. If slip section seals are broken during removal of the termination cap, vent could leak.*

All outer pipe joints must be sealed using one of the methods below, including the slip section that connects directly to the horizontal termination cap.

- Apply a bead of silicone sealant (300 ºF minimum continuous exposure rating) inside the female outer pipe joint prior to joining sections. See Figure 7.1 **OR**
- Apply a bead of silicone sealant (300 ºF minimum continuous exposure rating) to the outside of connecting joint after joining sections **OR**

  Apply aluminum foil tape (300 ºF minimum continuous exposure rating) to the outside of connecting joint after joining sections. On horizontal pipe runs, it is recommended that the tape seam is positioned on the bottom side of the vent pipe.
- Only outer pipes need to be sealed. All unit collar, pipe, slip section, elbow and cap outer flues shall be sealed in this manner, unless otherwise stated.

WARNING! Risk of Fire or Explosion! DO NOT *break silicone seals on slip sections. Use care when removing termination cap from slip pipe. If slip section seals are broken during removal of the termination cap, vent could leak.*

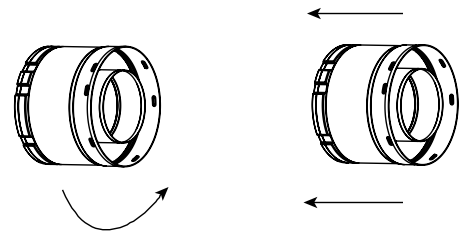

Note: Align seams to engage pipe, then rotate counterclockwise to lock

Figure 7.5 Adding Venting Components

NOTICE: *When installing a vent system with an HRC termination cap, all pipe system joints shall be sealed using a high temperature silicone sealant (300 ºF minimum continuous exposure rating).*

- *Apply a bead of silicone sealant (300 ºF minimum continuous exposure rating) inside the female outer pipe joint prior to joining sections.*
- *Only outer pipes are sealed, sealing the inner flue is not required.*
- *All unit collar, pipe, slip section, elbow and cap outer flues shall be sealed.*

B. Assemble Slip Sections

- Slide the inner flue of the slip section into the inner flue of the pipe section and the outer flue of the slip section over the outer flue of the pipe section. See Figure 7.6.
- Slide together to the desired length.

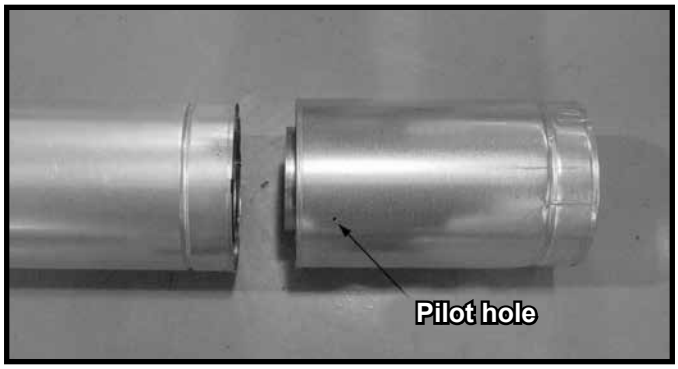

Figure 7.6 Slip Section Pilot Holes

- Maintain a 1-1/2 in. (38 mm) overlap between the slip section and the pipe section.
- Secure the pipe and slip section with two screws no longer than 1/2 in. (13 mm), using the pilot holes in the slip section. See Figure 7.7.

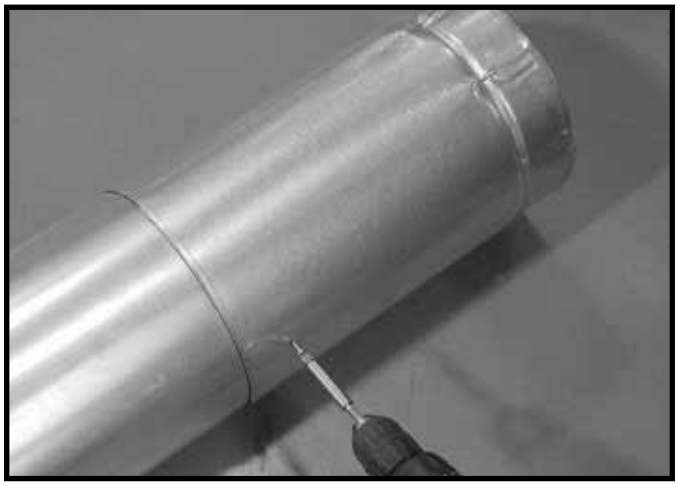

Figure 7.7 Screws into Slip Section

- Continue adding pipe as necessary following instructions in “Assembling Pipe Sections.”

NOTICE: *If slip section is too long, the inner and outer flues of the slip section can be cut to the desired length.*

C. Secure the Vent Sections

WARNING! Risk of Fire, Explosion or Asphyxiation! *Improper support could allow vent to sag and separate. Use vent run supports and connect vent sections per installation instructions.* ***DO NOT*** *allow vent to sag below connection point to appliance.*

- Vertical runs originating off the top of the appliance, with no offsets, must be supported every 8 feet (2.44 m) after the maximum allowed 25 feet (7.62 m) of unsupported rise.
- Vertical runs originating off the rear of the appliance, or after any elbow, must be supported every 8 feet (2.44 m).
- Horizontal runs must be supported every 5 feet (1.52 m).
- Vent supports or plumbers strap (spaced 120º apart) may be used to support vent sections. See Figures 7.8 and 7.9.

  Note: Figures 7.8 and 7.9 are to be used for reference only. Method of strap installation could vary by configuration of vent system.
- Wall shield firestops may be used to provide horizontal support to vent sections.
- SLP ceiling firestops have tabs that may be used to provide vertical support.

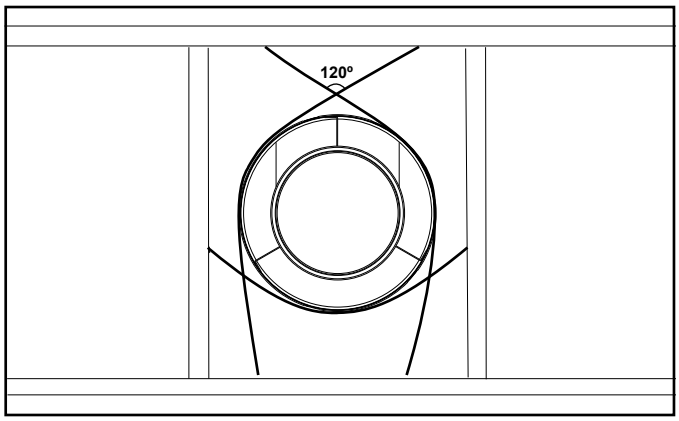

Figure 7.8 Securing Vertical Pipe Sections

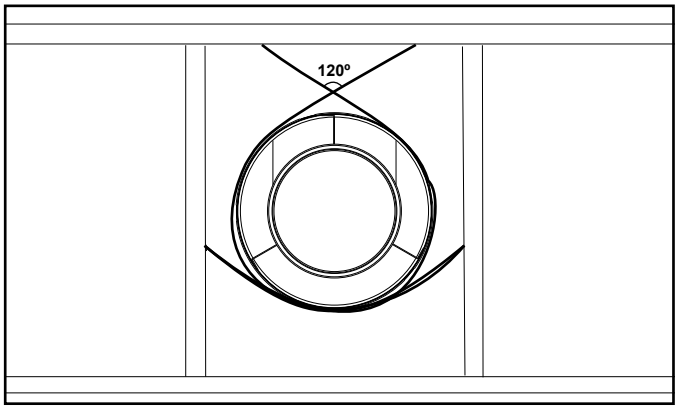

Figure 7.9 Securing Horizontal Pipe Sections

D. Disassemble Vent Sections

- Rotate either section (see Figure 7.10) so the seams on both pipe sections are aligned as shown in Figure 7.11.
- Pull carefully to separate the pieces of pipe.

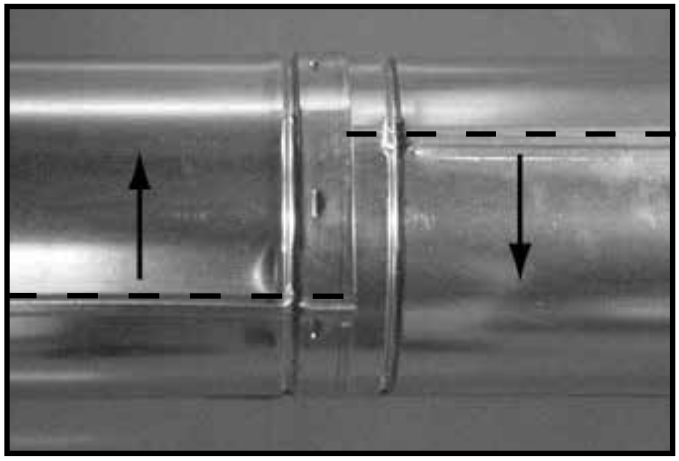

Figure 7.10 Rotate Seams for Disassembly

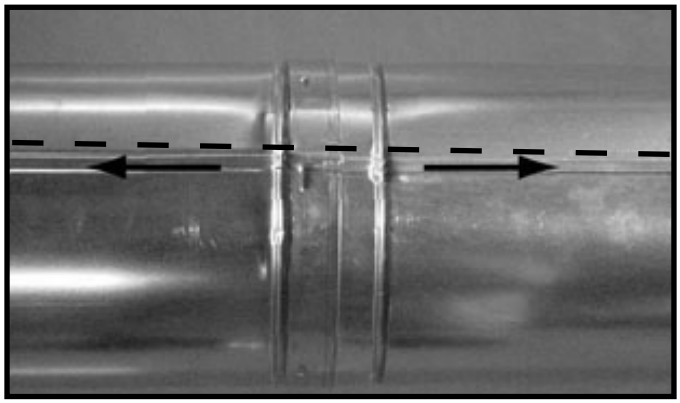

Figure 7.11 Align and Disassemble Vent Sections

E. Vertical Termination Requirements

Install and Seal Metal Roof Flashing

- See minimum vent heights for various pitched roofs (Section 4, Figure 4.1) to determine the length of pipe to extend through the roof.
- Slide the roof flashing over the pipe sections extending through the roof as shown in Figure 7.12.
- Use an elastomeric or silicone sealant with a minimum of 150 ºF temperature rating to seal the metal roof flashing.

Note: When installing a silicone or EPDM pipe flashing boot on a metal roof, it is recommended to put a bead of 100% silicone sealant where the boot contacts the vent pipe to prevent the entry of water. Follow the manufacturer's recommendations when installing the boot.

NOTICE: *Failure to properly seal the roof flashing and pipe seams could permit entry of water.*

- Seal the gap between the roof flashing and the outside diameter of the pipe.
- Seal the perimeter of the flashing where it contacts the roof surface. See Figure 7.12.
- Seal the exposed pipe section seams that are located above the roof.

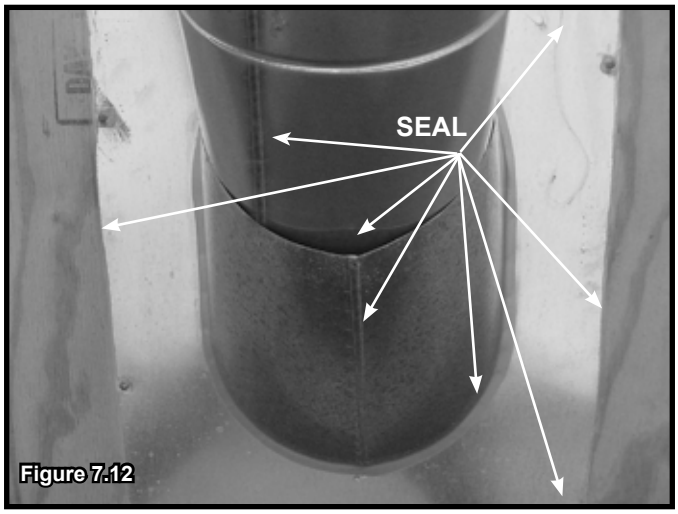

Figure 7.12

Assemble and Install Storm Collar

CAUTION! Risk of Cuts, Abrasions or Flying Debris. *Wear protective gloves and safety glasses during installation. Sheet metal edges are sharp.*

- Slide the storm collar onto the exposed pipe section and align brackets.
- Insert a bolt (provided) through the brackets and install nut. Do not completely tighten. See Figure 7.13.

Figure 7.13 Insert Bolt into Brackets

- Slide the assembled storm collar down the pipe section until it rests on the roof flashing. See Figure 7.14.
- Tighten nut and make sure the collar is tight against the pipe section.
- Seal around the top of the storm collar. See Figure 7.14.

Install Vertical Termination Cap

- Attach the vertical termination cap by sliding the inner collar of the cap into the inner flue of the pipe section while placing the outer collar of the cap over the outer flue of the pipe section.
- Secure the cap by driving three self-tapping screws (supplied) through the pilot holes in the outer collar of the cap into the outer flue of the pipe. See Figure 7.14.

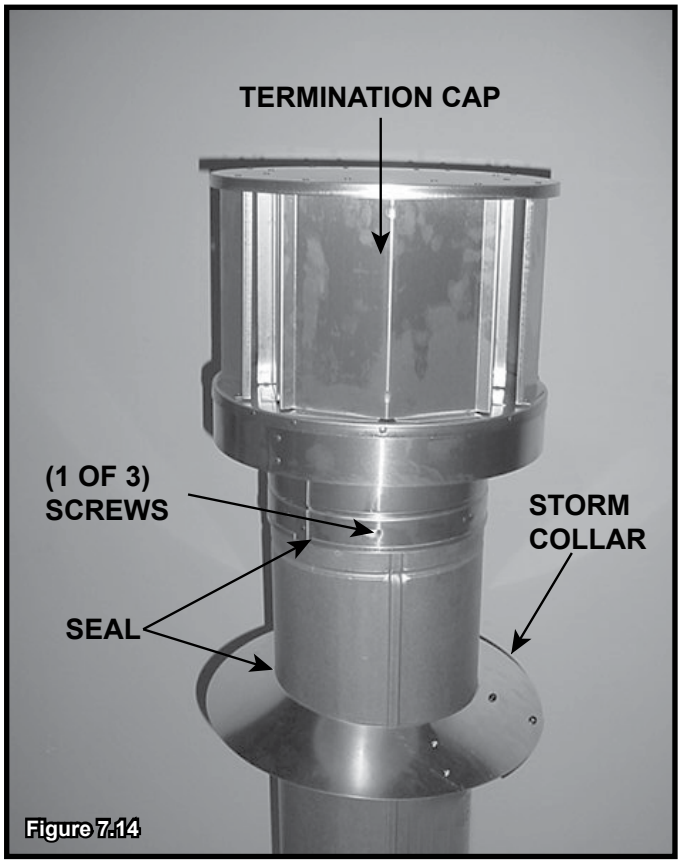

Figure 7.14

F. Horizontal Termination Requirements

Heat Shield Requirements for Horizontal Termination

WARNING! Risk of Fire! *To prevent overheating and fire, heat shields must extend through the entire wall thickness.*

- ***DO NOT*** *remove the heat shields attached to the wall shield firestop and the horizontal termination cap (shown in Figure 7.15).*
- *Heat shields must overlap 1-1/2 in. (38 mm) minimum.*

There are two sections of the heat shield. One section is factory-attached to the wall shield firestop. The other section is factory-attached to the cap. See Figure 7.15.

If the wall thickness does not allow the required 1-1/2 in. (38 mm) heat shield overlap when installed, an extended heat shield must be used.

- If the wall thickness is less than 4 in./102 mm (DVP) or 4-3/8 in./ 111 mm (SLP), the heat shields on the cap and wall shield firestop must be trimmed. A minimum 1-1/2 in. (38 mm) overlap MUST be maintained.
- Use an extended heat shield if the finished wall thickness is greater than 7-1/4 in. (184 mm).
- The extended heat shield may need to be cut to length maintaining sufficient length for a 1-1/2 in. (38 mm) overlap between heat shields.
- Attach the extended heat shield to either of the existing heat shields using the screws supplied with the extended heat shield. Refer to vent components diagrams in the back of this manual.
- Rest the small leg on the extended heat shield on top of the pipe section to properly space it from the pipe section.

Important Notice: Heat shields may not be field constructed.

Install Horizontal Termination Cap (DVP and SLP Pipe)

WARNING! Risk of Fire! *The telescoping flue section of the termination cap MUST be used when connecting vent.*

- *1-1/2 (38 mm) minimum overlap of flue telescoping section is required.*

Failure to maintain overlap could cause overheating and fire.

- Vent termination must not be recessed in the wall. Siding may be brought to the edge of the cap base.
- Flash and seal as appropriate for siding material at outside edges of cap.
- When installing a horizontal termination cap, follow the cap location guidelines as prescribed by current **ANSI Z223.1** and **CAN/CGA-B149** installation codes and refer to Section 4 of this manual.

CAUTION! Risk of Burns! *Local codes may require installation of a cap shield to prevent anything or anyone from touching the hot cap.*

NOTICE: *For certain exposures which require superior resistance to wind-driven rain penetration, a flashing kit and HRC caps are available. When penetrating a brick wall, a brick extension kit is available for framing the brick.*

Note: When using termination caps with factory-supplied heat shield attached, no additional wall shield firestop is required on the exterior side of a combustible wall.

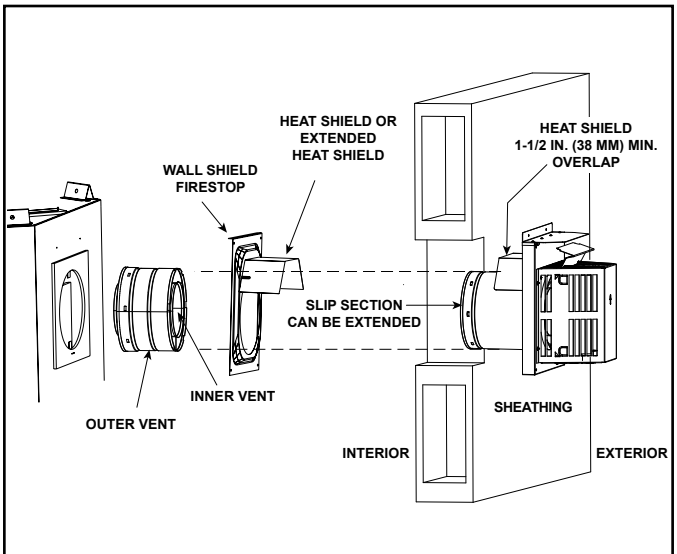

Figure 7.15 Venting Through the Wall

8 Electrical Information

A. General Information

***WARNING! Risk of Shock! DO NOT** wire 110-120 VAC to the ignition module or to the appliance wall switch. (IPI)*

Incorrect wiring will damage controls.

***NOTICE:** This appliance must be electrically wired and grounded in accordance with local codes or, in the absence of local codes, with* **National Electric Code ANSI/NFPA 70-latest edition** *or the* **Canadian Electric Code CSA C22.1.**

- Wire the appliance circuit using a minimum 14-2 AWG with ground to unswitched 110-120 VAC. This is required for proper operation of the appliance (IntelliFire® ignition).
- A 110-120 VAC circuit for this product must be protected with ground-fault circuit interrupter protection, in compliance with the applicable electrical codes, when it is installed in locations such as in bathrooms or near sinks.
- Low voltage and 110-120 VAC voltage cannot be shared within the same wall box.
- In some instances, the spark ignition of the fireplace may cause intermittent, non-damaging, interference during the lighting sequence with a TV plugged into the same circuit. It is recommended that the fireplace and TV use different circuits to mitigate the interference potential. If interference is occurring on the same circuit, the use of surge protectors may help alleviate the interference.

Junction Box Wiring

- Remove the screw attaching the junction box/receptacle to the outer shell, rotate the junction box inward to disengage it from the outer shell. See Figure 8.1.
- Pull the electrical wires from outside the appliance through the opening into the valve compartment and secure wires with a Romex connector. See Figure 8.1.
- Make all necessary wire connections to the junction box/receptacle and reattach the junction box/receptacle to the outer shell.

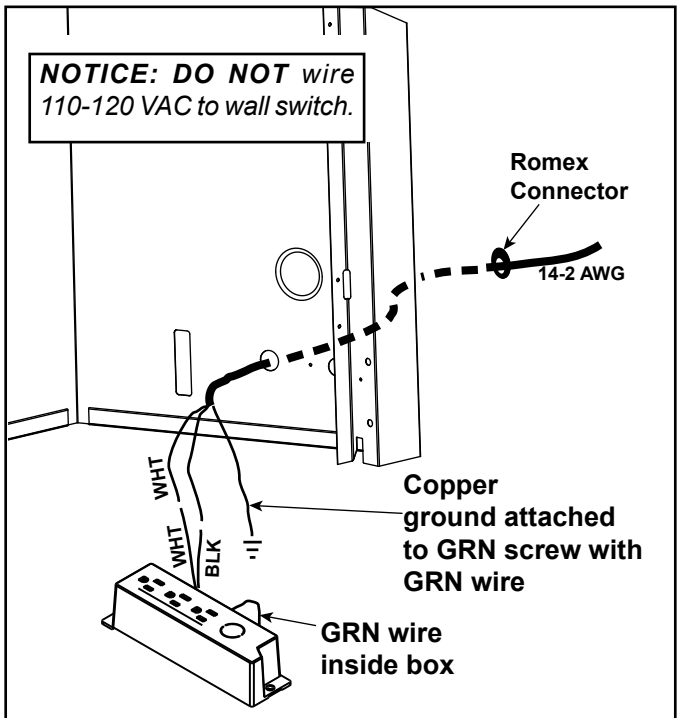

Figure 8.1 Junction Box Detail

Accessories Requirements

- This appliance may be used with a wall switch, wall mounted thermostat and/or a remote control.

Wiring for optional Hearth & Home Technologies approved accessories should be done now to avoid reconstruction. Follow instructions that come with those accessories.

Electrical Service and Repair

***WARNING! Risk of Shock!** Label all wires prior to disconnection when servicing controls. Wiring errors could cause improper and dangerous operation. Verify proper operation after servicing.*

***WARNING! Risk of Shock!** Replace damaged wire with type 105º C rated wire. Wire must have high temperature insulation.*

Component Tray

The electrical components are installed on the component tray. If it becomes necessary to remove the components, use the information in Figure 8.2 to remove them and reinstall them correctly on the component tray.

The IFT-ECM is held in position by two placement tabs (front and rear) and one plastic pin on the component tray. To remove the IFT-ECM, bend the rear placement tab back slightly and tip the IFT-ECM to disengage it from the pin and the shorter placement tab. To reinstall the IFT-ECM on the component tray, engage the front placement tab first.

The LED controller is held in position by two placement tabs and the four corner guides on the component tray. To disengage the LED Controller, bend either placement tab back slightly. Tip and lift the LED Controller out.

Note the orientation of the LED controller in Figure 8.2. The LED controller must be positioned as shown with the green, white and black wires toward the center of the tray. The LED controller has a rounded profile on the top side and a flat profile on the bottom side. Ensure it is positioned correctly on the component tray.

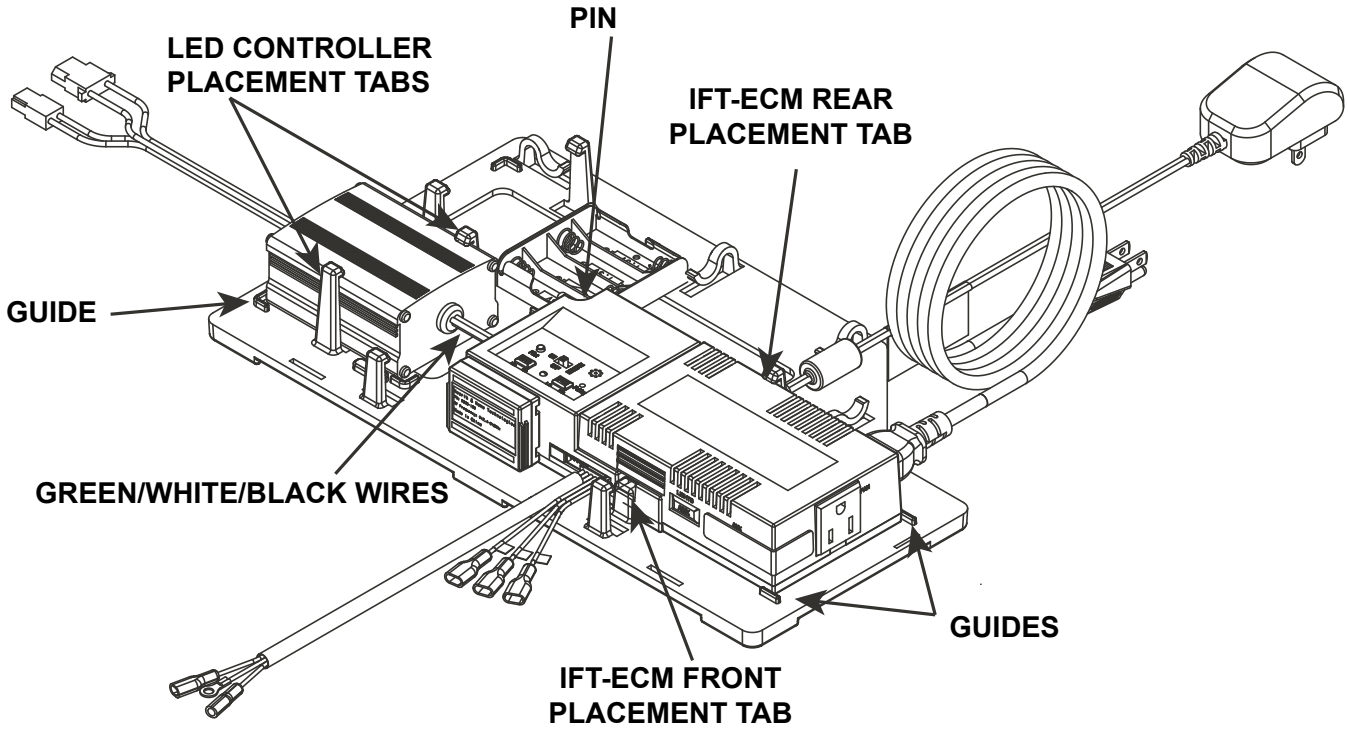

Figure 8.2 Electrical Component Tray

B. Wiring Requirements

IntelliFire Touch® Ignition System Wiring

- Wire the appliance junction box to 110-120 VAC for proper operation of the appliance.

***WARNING! Risk of Shock or Explosion! DO NOT** wire IPI controlled appliance junction box to a switched circuit. Incorrect wiring will override IPI safety lockout.*

- Refer to Figure 8.3, IntelliFire Touch (IPI) Wiring Diagram.
- This appliance is equipped with an IntelliFire control valve which operates on a 6 volt system.
- Plug the 6 volt transformer plug into the appliance junction box to supply power to the unit OR install 4 AA cell batteries (not included) into the battery pack before use.

***NOTICE:** Batteries should only be used as a power source in the event of an emergency power outage. Batteries should not be used as a primary long-term power source. Batteries tend to corrode over time. When using batteries as a power source, the 6 volt transformer must be unplugged from the receptacle.*

Do not store batteries in the battery pack when the appliance is powered by the 6 volt transformer connected to permanent electrical service.

LED's

LED's are factory installed. No additional set up or maintenance is required.

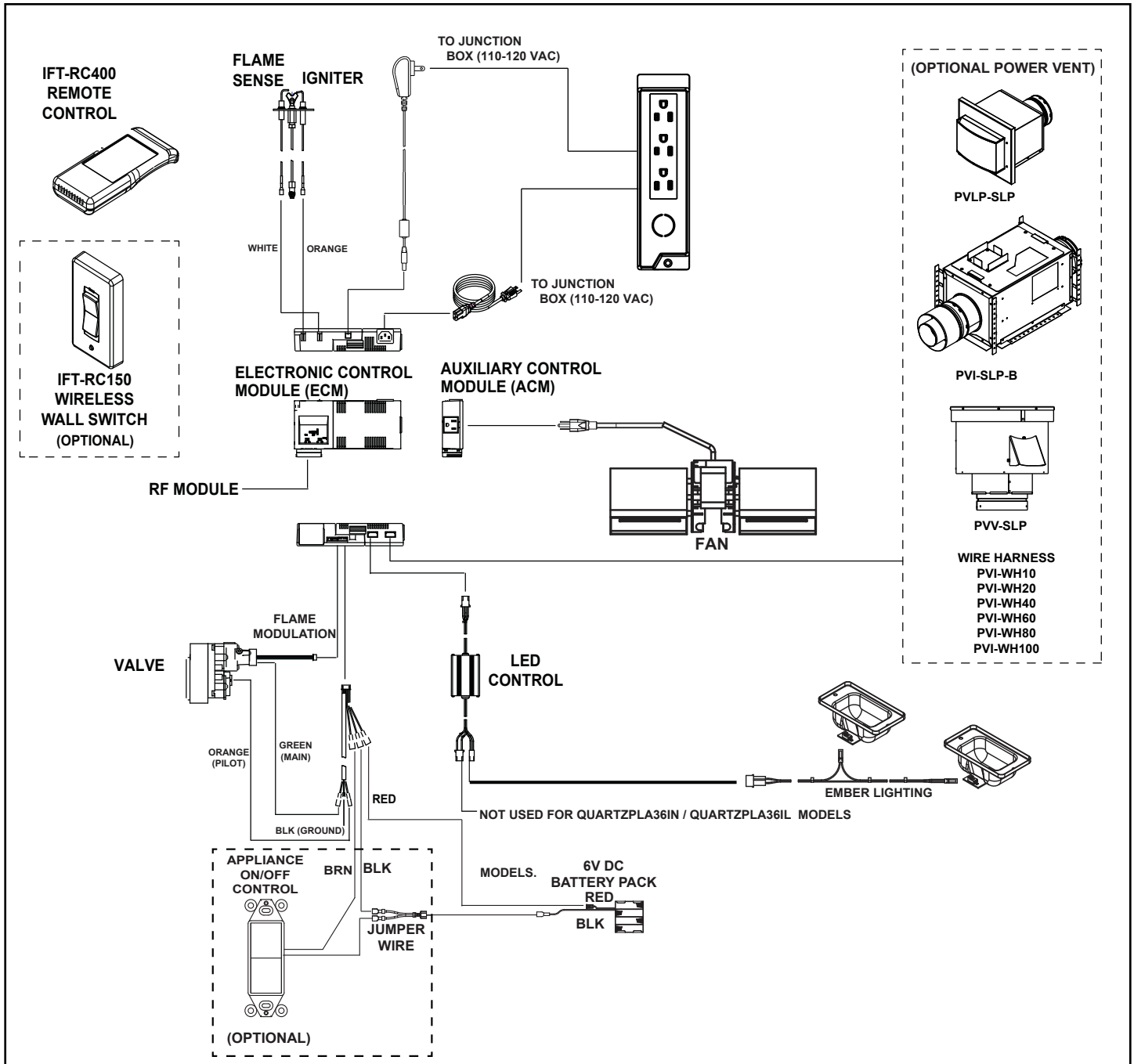

Figure 8.3 IntelliFire Touch Wiring Diagram

9 Gas Information

A. Fuel Conversion

- Make sure the appliance is compatible with available gas types.
- Conversions must be made by a qualified service technician using Hearth & Home Technologies specified and approved parts.

B. Gas Pressure

⚠ WARNING

Fire Risk.

Risk of Fire! Risk of Explosion!

High pressure will damage valve.

- Isolate gas supply piping BEFORE pressure testing gas line.
- Close the manual shutoff valve BEFORE pressure testing gas line.

- Optimum appliance performance requires proper input pressures.
- Gas line sizing requirements will be determined in ANSI Z223.1 National Fuel Gas Code in the USA and CAN/CGA B149 in Canada.
- Pressure requirements when in operation are:

Gas Pressure	Natural Gas	Propane
Minimum inlet pressure	5.0 in. w.c.	11.0 in. w.c.
Maximum inlet pressure	10.0 in. w.c.	13.0 in. w.c.
Manifold pressure	3.5 in. w.c.	10.0 in. w.c.

- Verify inlet pressures. Verify minimum pressures when other household gas appliances are operating.
- Install regulator upstream of valve if line pressure is greater than 1/2 psig.

Note: Have the gas supply line installed in accordance with local codes, if any. If not, follow ANSI Z223.1. Installation should be done by a qualified installer approved and/or licensed as required by the locality. (In the Commonwealth of Massachusetts installation must be performed by a licensed plumber or gas fitter).

Note: A listed (and Commonwealth of Massachusetts approved) 1/2 in. (13 mm) T-handle manual shut-off valve and flexible gas connector are connected to the 1/2 in. (13 mm) control valve inlet.

- **If substituting for these components, please consult local codes for compliance.**

C. Gas Connection

WARNING! Risk of Fire or Explosion! *Support control when attaching pipe to prevent bending gas line.*

- Refer to Section 3 for location of gas line access in appliance.
- Gas line may be run through knockout(s) provided.
- The gap between supply piping and gas access hole may be sealed with caulk or aluminum foil tape with a minimum of 300 ºF continuous exposure rating or stuffed with non-combustible, unfaced insulation to prevent cold air infiltration.
- Ensure that gas line does not come in contact with outer wrap of the appliance. Follow local codes.
- Pipe incoming gas line into valve compartment.
- Connect incoming gas line to the 1/2 in. (13 mm) NPT connection on manual shutoff valve.

WARNING! Risk of Fire or Explosion! *Gas build-up during line purge could ignite.*

- *A small amount of air will be in the gas supply lines.*
- *Ensure adequate ventilation.*
- *Ensure there are no ignition sources such as sparks or open flames.*

Light the appliance. It will take a short time for air to purge from lines. When purging is complete the appliance will light and operate normally.

WARNING! Risk of Fire, Explosion or Asphyxiation! *Check all fittings and connections with a non-corrosive commercially available leak-check solution.* ***DO NOT*** *use open flame. Fittings and connections could have loosened during shipping and handling.*

D. High Altitude Installations

NOTICE: *If the heating value of the gas has been reduced, these rules do not apply. Check with your local gas utility or authorities having jurisdiction.*

When installing above 2000 feet elevation:

- In the USA: Reduce input rate 4% for each 1000 feet above 2000 feet.
- In CANADA: Input ratings are certified without a reduction of input rate for elevations up to 4500 feet (1370 m)above sea level. Please consult provincial and/or local authorities having jurisdiction for installations at elevations above 4500 feet (1370 m).

Check with your local gas utility to determine proper orifice size.

E. Air Shutter Setting

WARNING! *Risk of Explosion or Delayed Ignition! Improperly adjusted air shutter could cause soot buildup.*

NOTICE: *If sooting occurs, provide more air by opening the air shutter.*

Air shutter settings should be adjusted by a qualified service technician at the time of installation. The air shutter is set at the factory for a typical horizontal termination through a 2 X 6 wall:

Top Vent: 90 degree elbow off top with 12 inches horizontal.

Rear Vent: 12 inches horizontal.

Adjust air shutter for different vent runs. See Figure 9.1.

- Loosen the wing nut.
- Push the air handle in to close the air shutter.
- Pull the air handle out to open the air shutter.
- Tighten the wing nut.

Air Shutter Settings

QUARTZPLA36IN (NG)	3/16 IN.
QUARTZPLA36IL (PROPANE)	Full Open

The air shutter settings listed above were set based on an appliance that was vented off the top with one 90 degree elbow and the maximum horizontal vent run permitted; this vent configuration is considered to be a more restrictive vent configuration. For less restrictive venting, such as short horizontally terminating or a vertically terminating appliance, the shutter may be adjusted to a more “closed” position.

Natural Gas (NG) installations:

As a general rule, it is acceptable to reduce the shutter opening to adjust for short horizontally terminating or vertically terminating vent configurations prior to the initial fire up.

Propane (P) installations

- It is recommended that the air shutter on propane appliances remain at the setting preset at the factory.

Air Shutter Adjustment

The air shutter may be adjusted by locating and loosening the wing nut shown in Figure 9.1. Push/Slide the wing nut toward the back of the appliance to close the shutter. Pull/Slide the wing nut toward the front of the appliance to open the air shutter.

Shutter Setting Verification / Flame Appearance

- After 15 minutes, the flames will be a yellow/blue mix. The front flames may be blue at this time.
- After 30 minutes, the flames should be yellow with some blue flames near the burner ports.
- After 1 hour, the flame will be at is maximum maturity.

NOTICE: *Flames should not appear orange or stretch to the top refractory. If flames are dark orange with dark, smoky tips, provide more primary air to the burner by opening the air shutter accordingly.*

Note: Visually, a propane flame may differ from a natural gas flame. This is due to the different chemical compositions that make up both fuel types. In general, the propane (P) flames may be a little shorter and much brighter than a natural gas (NG) flame.

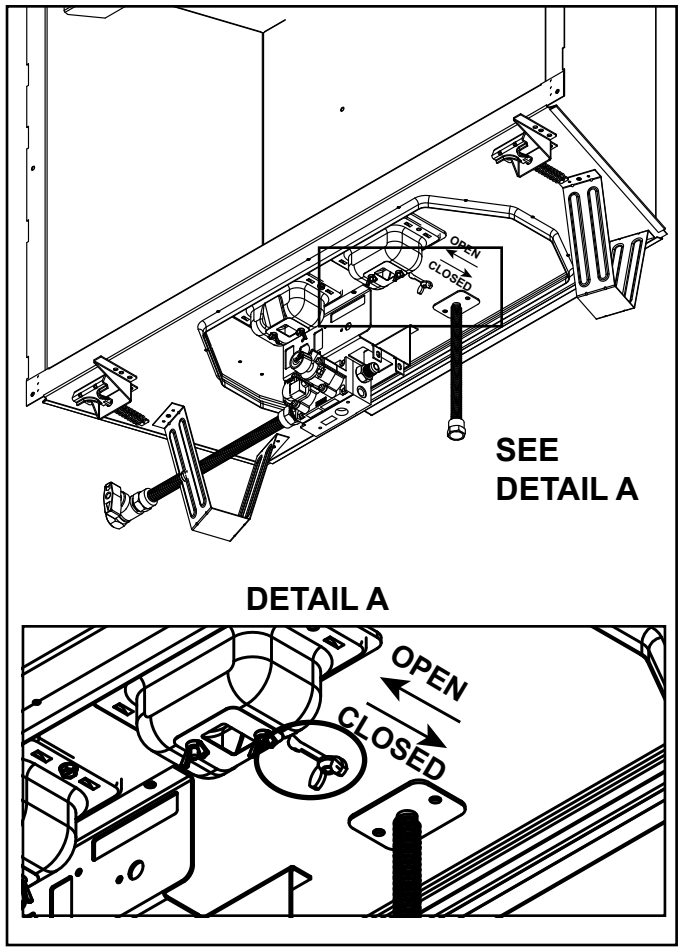

Figure 9.1 Air Shutter Adjustment

F. Burner Identification/Verification

The burner may be accessed for identification and verification purposes. This task should be performed by a qualified service technician. The logs and burner must be removed to see these identification marks. Disconnect the pilot from the burner before removal. See Figure 9.2 for burner identification chart. Notch patterns are located on bottom side of burner.

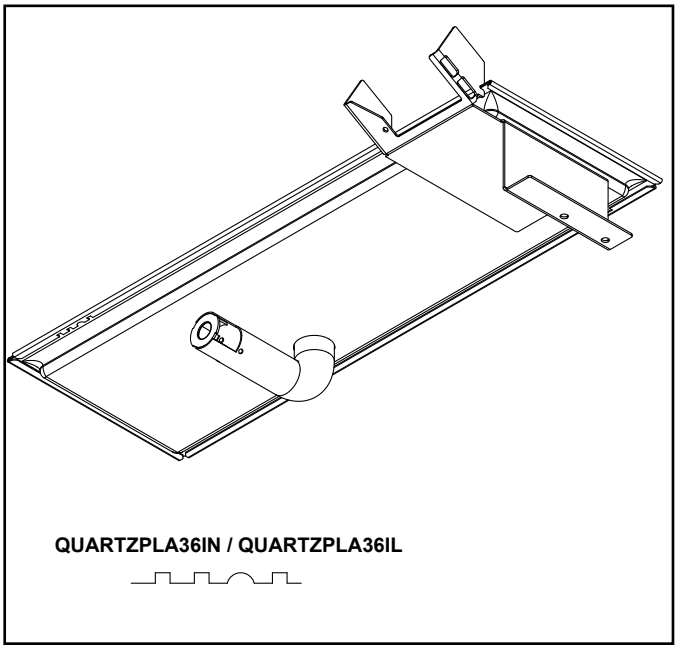

Figure 9.2 Burner Identification

10 Finishing

A. Facing Material

⚠ WARNING

Risk of Fire!

DO NOT *apply combustible materials beyond the minimum clearances. Comply with all minimum clearances to combustibles as specified in this manual. Materials overlapping into non-combustible zones could ignite and will interfere with air flow through decorative barrier fronts.*

- Metal front of appliance may be covered with non-combustible materials only.
- Facing and/or finishing materials must not interfere with air flow through decorative barrier fronts, removal of decorative barrier fronts or access for service.
- Facing and/or finishing materials must never overhang into the glass opening.
- Observe all clearances when applying combustible materials.
- Confirm that appliance is plum, square and level. See Section 6.
- Seal gaps between the finished wall and appliance top and sides using a 300 ºF minimum sealant. Refer to Figure 10.1 and Figure 10.2.
- Finishing materials must be installed with no gaps in order to prevent the escape of heat between the finishing material and the wall. See Figure 10.2.

NOTICE: *Surface temperatures around the appliance will become warm while the appliance is in operation. Ensure finishing materials used for all surfaces (floor, walls, mantels, etc.) will withstand temperatures up to 190°F.*

When using combustible flooring materials, such as carpeting and padding, the combustible flooring material must not extend higher than one inch from the base of the appliance when the appliance is mounted at floor level.

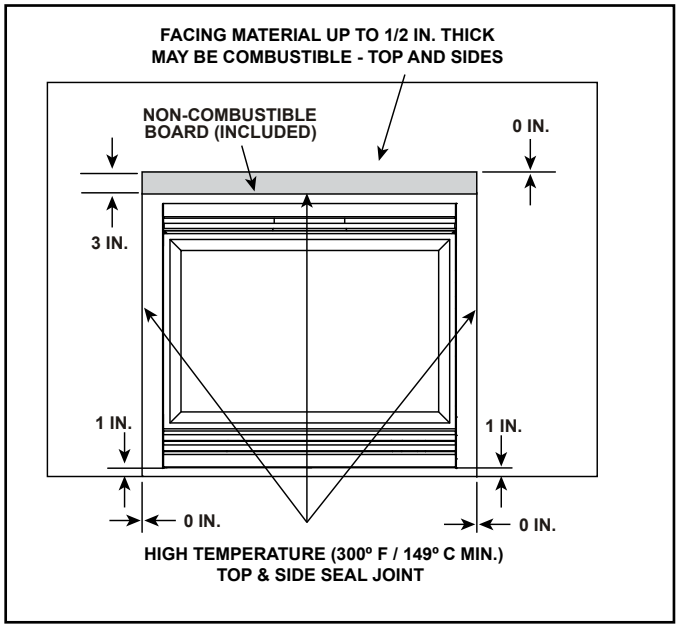

Figure 10.1 Non-combustible Facing Diagram

WARNING! *Risk of Overheating!* ***DO NOT*** *allow gap between finishing materials and front of appliance.*

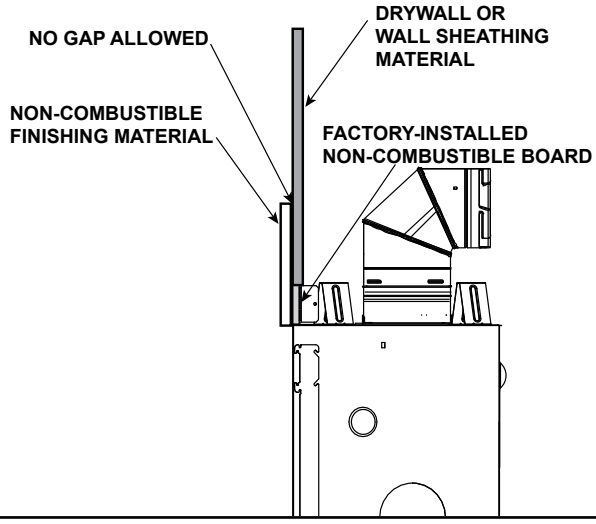

Figure 10.2 Finishing Material Installed

B. Installing a Television

If installing a television (TV) above the appliance, see Section 2.B.

C. Mantel and Wall Projections

WARNING! Risk of Fire! *Comply with all minimum clearances as specified. Mantel MUST be fastened to wall with no gaps.*

- *Framing closer than the minimums listed must be constructed entirely of non-combustible materials (i.e., steel studs, concrete board, etc.).*
- *No gaps allowed between the wall and the bottom of the mantel.*
- Combustible mantel legs and wall projections may be applied over the non-combustible board supplied with the appliance. Follow guidelines as shown in the figures below for mantels, mantel legs and wall projections.

> **Note:** Measurement is taken from top/side of the opening, NOT the top/side of the fireplace.

Combustible Mantels

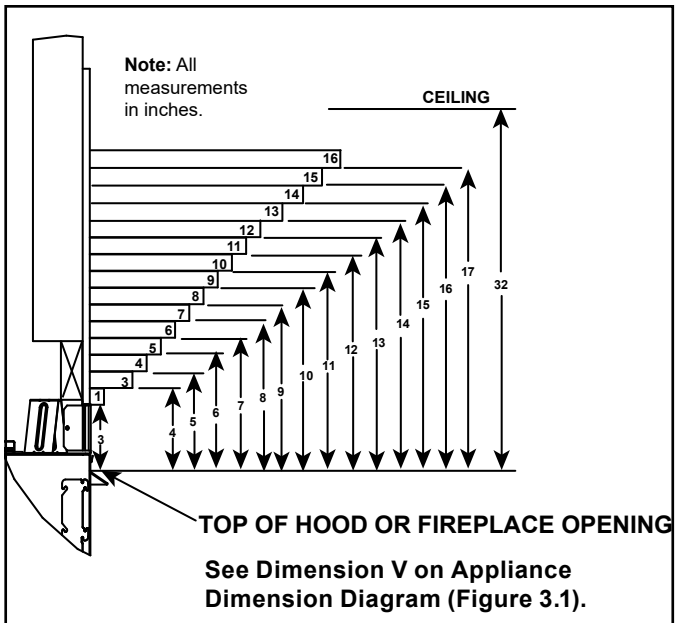

Figure 10.3 Minimum Vertical and Maximum Horizontal Dimensions of Combustibles

Non-Combustible Mantels

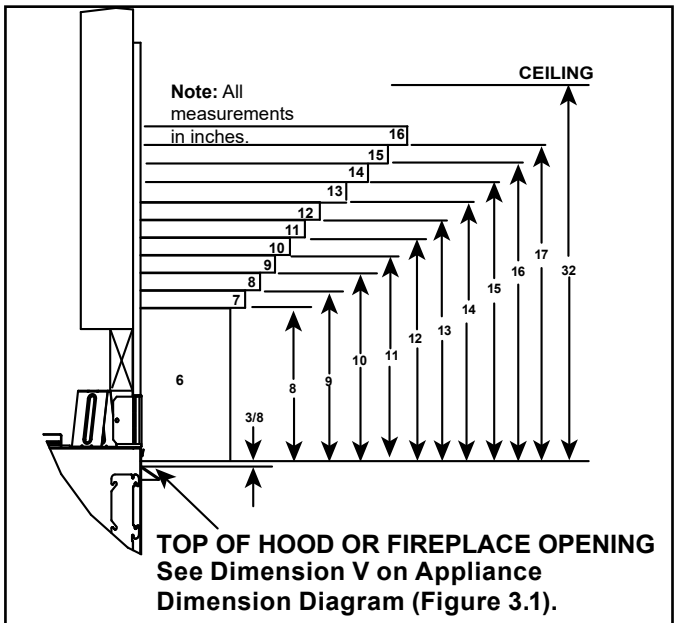

Figure 10.4 Minimum Vertical and Maximum Horizontal Dimensions of Non-Combustibles

Combustible Mantel Legs or Wall Projections

Combustible mantel and wall projections may be applied over the non-combustible board supplied with the fireplace when following the combustible projection figures below.

Combustible Mantel Legs or Wall Projections

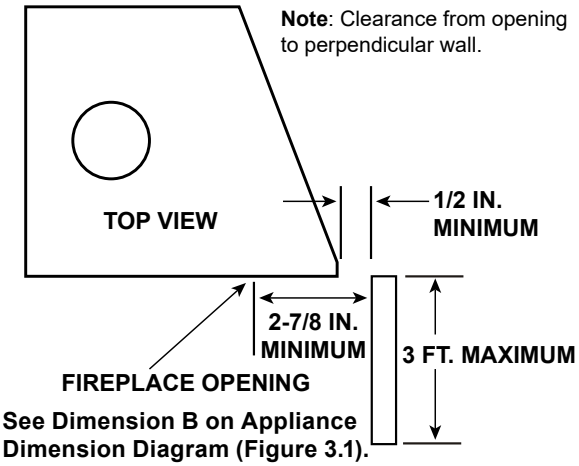

Figure 10.4 Combustible Mantel Leg or Wall Projection (Acceptable on both sides of opening)

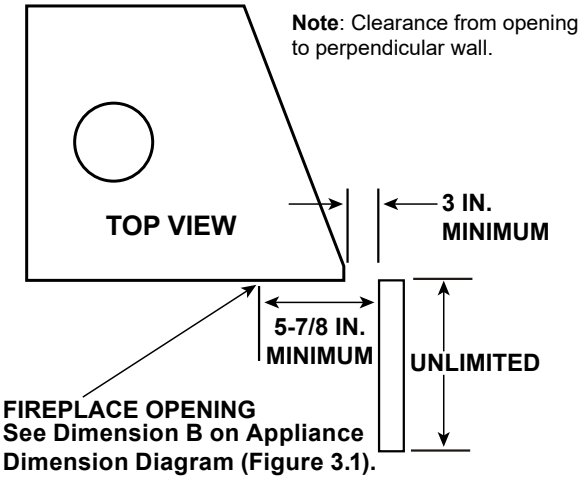

Figure 10.5 Combustible Mantel Legs or Wall Projections (Acceptable on one side of opening)

Non-Combustible Mantel Legs or Wall Projections

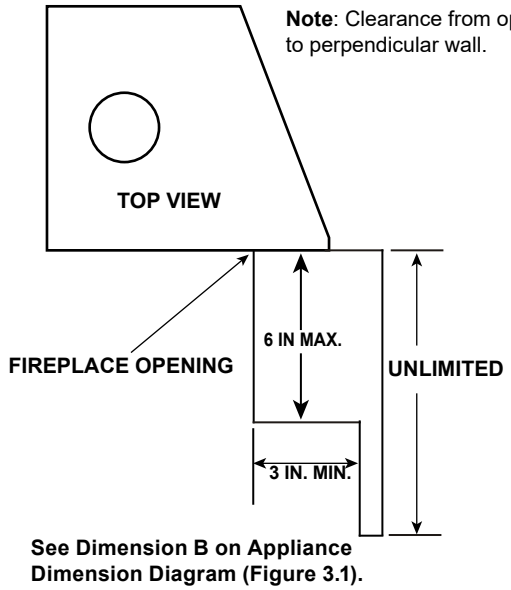

Figure 10.6 Non-Combustible Mantel Legs or Wall Projections (Acceptable on both sides of opening)

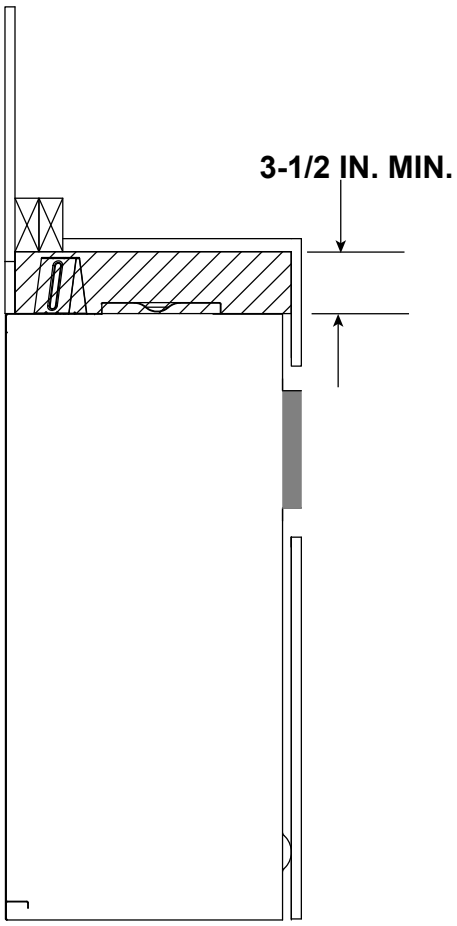

Figure 10.7 Rear Vent Non-Combustible Zone Above Appliance

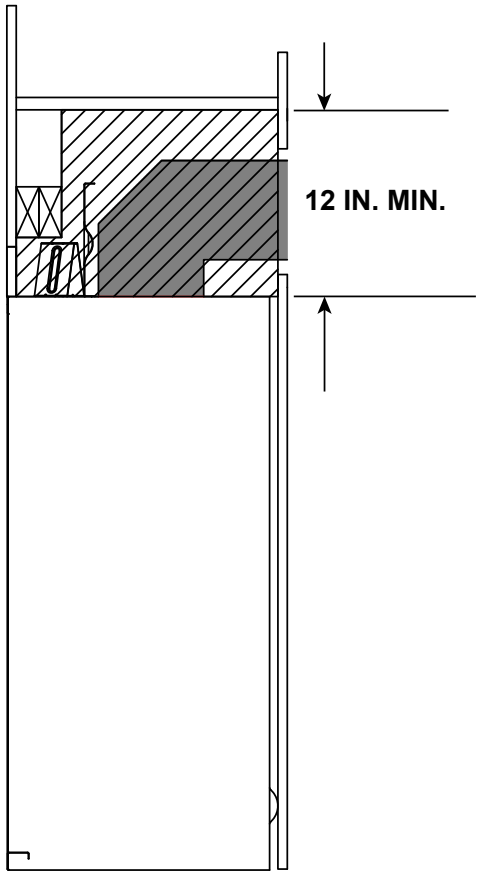

Figure 10.8 Top Vent Non-Combustible Zone Above Appliance

D. Decorative Barrier Front Dimensions for Finishing

Only decorative barrier fronts certified for use with this appliance model may be used. Contact your dealer for a list of decorative barrier fronts that may be used. Once you have determined what kind of decorative barrier front and finishing material is going to be used on the fireplace, you may use the table below which shows the decorative barrier front models and the finishing material thickness allowed.

MODEL and TEMPLATE PART #			
FRONT	FIT	FINISH MATERIAL THICKNESS	SEE FIGURE
DBM36	Inside	6 inch max.	10.9
CRD36	Overlap	1 inch max.	10.10
	Inside	1-6 inch max.	10.11

Table 1. Finishing Clearances for CRD36 and DBM36 Fronts

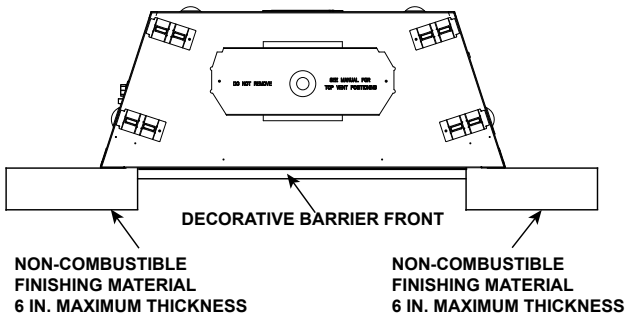

Stop non-combustible finishing material flush with appliance surround opening.

Figure 10.9 Overlap Fit Decorative Barrier Front (DBM36)

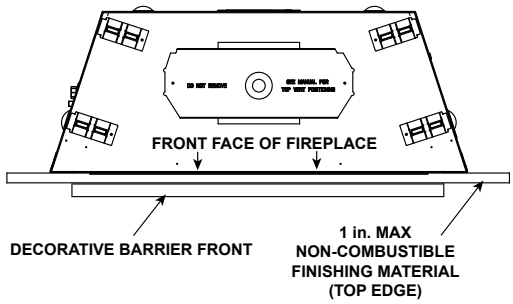

Non-combustible finishing materials 1 in. maximum thick.
Stop non-combustible finishing material flush with opening.

Figure 10.10 Overlap Fit Door (CRD36)

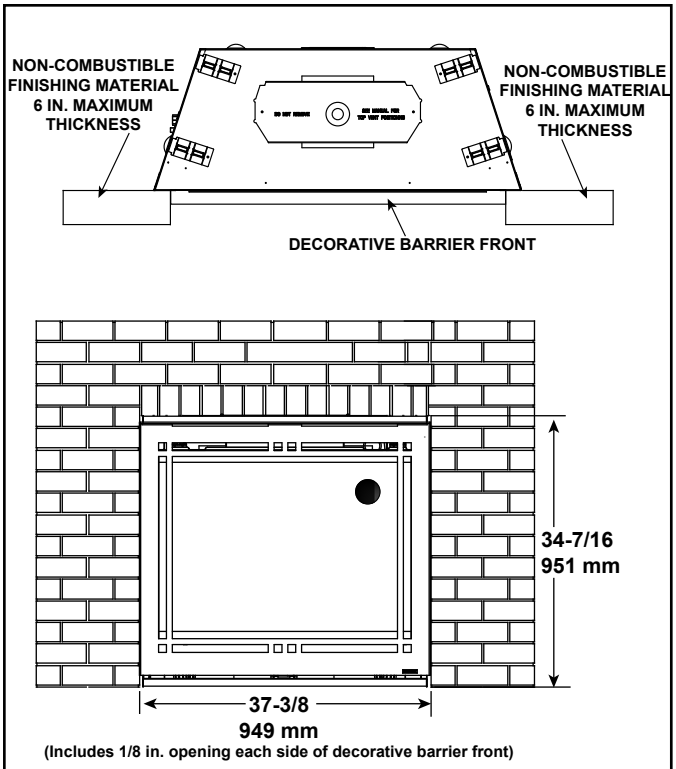

Non-combustible finishing material between 1 and 6 in. thick.

Figure 10.11 Inside Fit Decorative Barrier Front (CRD36)

11 Appliance Setup

A. Remove the Shipping Materials

WARNING! Risk of Fire! *Close the ball valve before installing the splatter guard to prevent accidental lighting. Remove the splatter guard before lighting the appliance.*

Remove shipping materials from inside or underneath the firebox.

- The splatter guard is a piece of corrugated material used to protect the appliance during the installation process before finishing work on the whole hearth is complete. Splatter guards may be factory installed or accompany the decorative barrier front of the appliance, depending on the fireplace model. Splatter guards must be removed before appliance is fired.

B. Clean the Appliance

Clean/vacuum any sawdust that may have accumulated inside the firebox or underneath in the control cavity.

C. Install the Refractory Kit (Required)

A refractory kit is required for use with this appliance. A reflective black glass or brick refractory kit is available and must be ordered separately at time of appliance purchase. Install the refractory kit per the included instructions.

D. Install and Paint Teco-Sil

1. Remove Teco-Sil rock from its shipping location.
2. Bend the tabs on the left and right base pans slightly down toward the ember tray. See figure 11.1
3. Install theTeco-Sil into the ember tray.
4. Fog the Teco-Sil to the desired look, using high temperature black paint (Hearth & Home Technologies part number TUP-GBK-12). See below for fogging tips. Prior to painting, take precautions to prevent any overspray from reaching the pilot assembly. Paint is not included with the appliance. See Fig 11.2.

Fogging Tips

- Apply paint with the ember lights turned on. This will help avoid over fogging or under fogging.
- Reduce the lighting in the room while applying the paint.
- Fog the Teco-Sil to create a realistic coal bed appearance.
- Allow the paint to dry/cure a minimum of 15 minutes.

- DO NOT allow paint or paint overspray on the pilot.

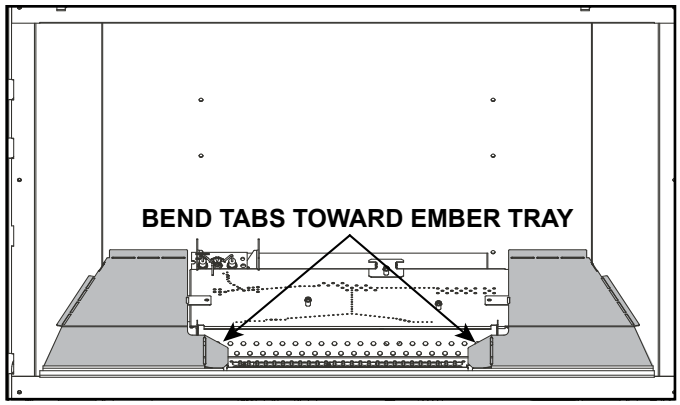

Figure 11.1 Bend Basepan Tabs

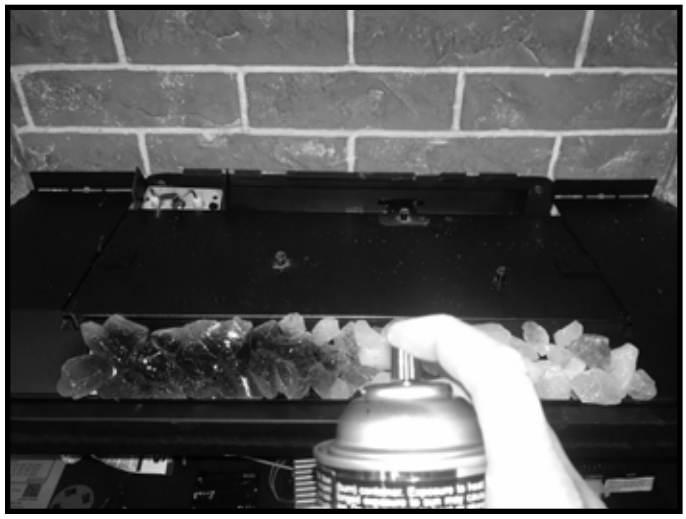

Figure 11.2 Paint Teco-Sil

E. Install the Log Assembly (Including Glowing Embers and Lava Rock)

Log Set Assembly: LOGS-QPLA36
Models: QUARTZPLA36IN, QUARTZPLA36IL

LOG PLACEMENT INSTRUCTIONS

CAUTION: Logs are fragile, handle with care.

Log Identification:

Reference Figure 1 for identification of logs. It is important to lay the logs out in order as shown in Figure 1. Some logs are similar to others in shape or size so it is imperative to correctly identify each log.

Note: The log placement is identical whether the glass liner refractory or the brick refractory is installed. Refractory is required for these models and must be ordered separately from appliance at time of appliance purchase.

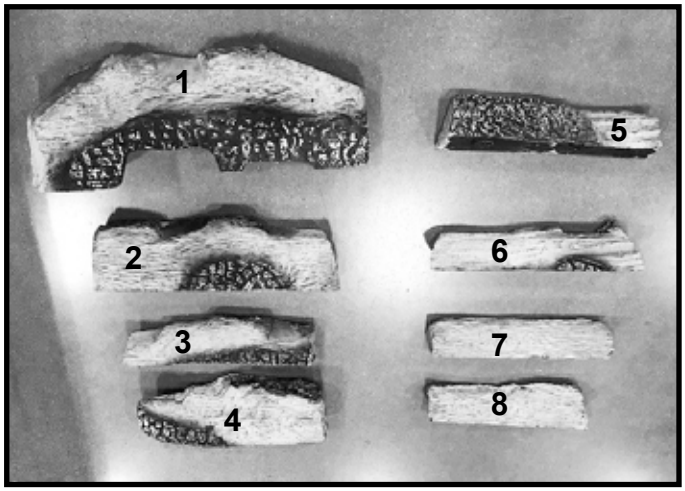

Figure 1 Log Identification

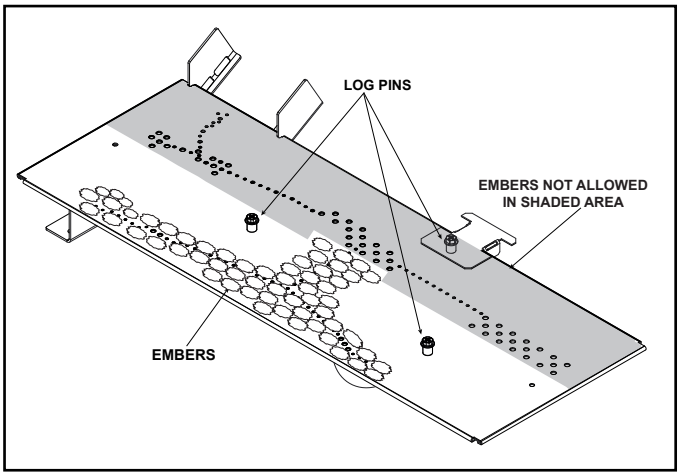

Figure 2 Log Pin and Glowing Ember Locations

1. **LOG #1:** Locate and install the Log #1 by installing the right end of the log over the rear log pin. See Figure 2 for log pin locations. Then rotate the left end of the log until it contacts the rear refractory panel. See Figure 3.

Figure 3 Install Log #1

2. **LOG #2:** Locate and install Log #2 by positioning the left side of the log on the flat spot of Log #1. The burned out area of Log #2 should align with the right edge of Log #1. When installed correctly, the front face of Log #2 should be flush with the front face of Log #1. See Figure 4.

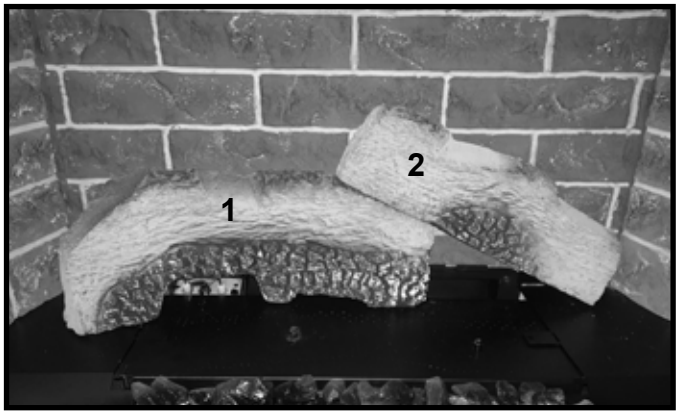

Figure 4 Install Log #2

3. **LOG #3:** Locate and install Log #3 by installing the "right" end of the log over the left burner pin and pressing "down" to engage log pin. See Figure 2 for log pin locations. Rotate Log #3 counterclockwise until it contacts the ember tray tab as shown in Figure 5.

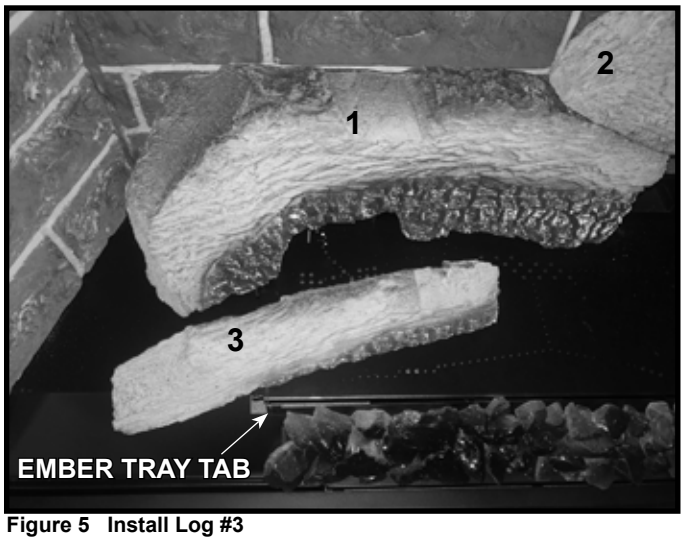

Figure 5 Install Log #3

4. **LOG #4:** Locate and install the Log #4 by installing the "left" end of the log over the right log pin and pressing "down" to engage the log pin. See Figure 2 for log pin locations. The face of the log should contact the right ember tray tab. See Figure 6.

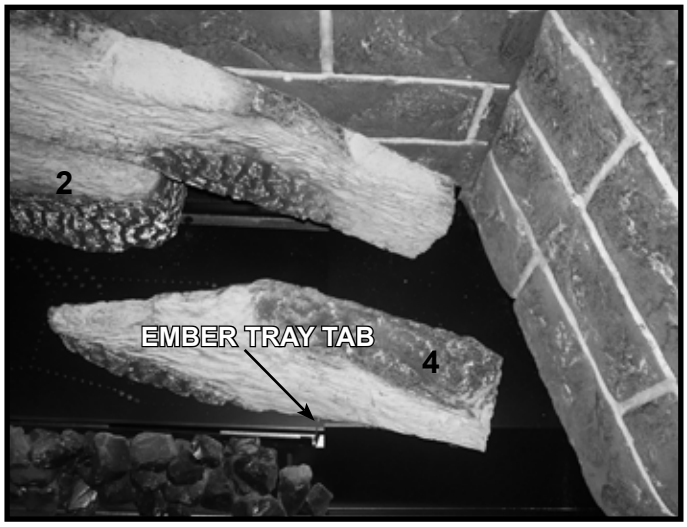

Figure 6 Install Log #4

5. Locate the glowing embers and install them as shown in Figure 2. Do not install any glowing embers on the back row of burner ports. Glowing Embers can be placed directly over burner ports. However, for optimal front flame height place embers around burner ports.

WARNING! Risk of Explosion! *Follow ember placement instructions. Replace ember material annually. Improperly placed embers interfere with proper burner operation.*

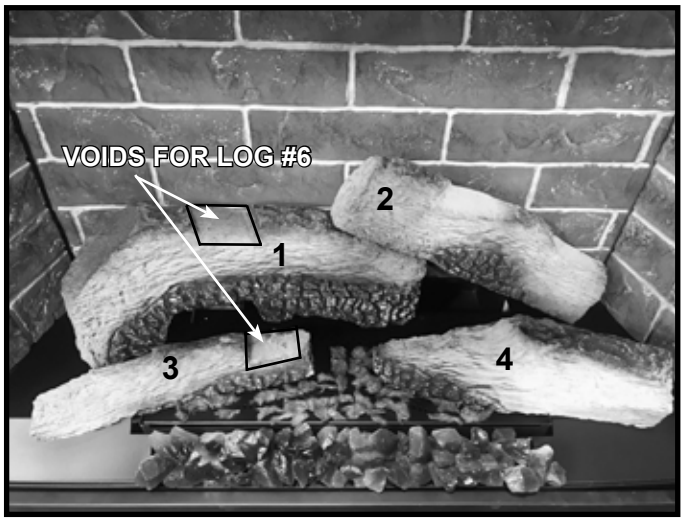

Figure 7 Embers Installed

6. **LOG #5:** Locate and install Log #5. This log does not have any "burn out" features painted on the log. The "left" end of this log will rest on the base pan and the "right" end will rest on the "left" end of Log #1. See Figure 8.

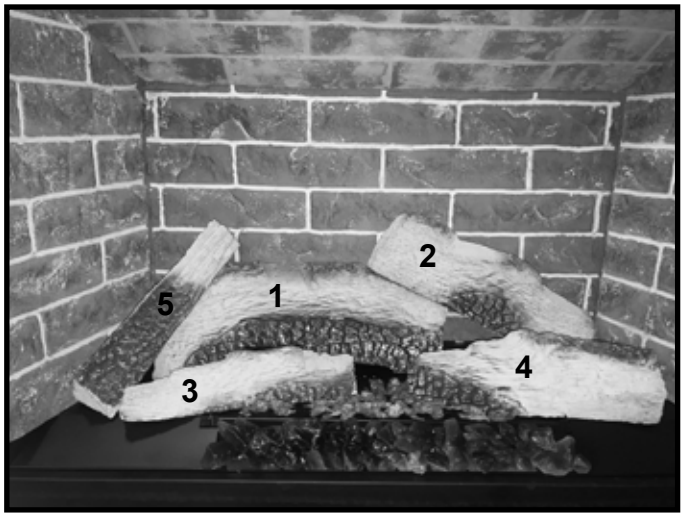

Figure 8 Install Log #5

7. **LOG #6:** Log #6 will rest on the voids of Log #1 and Log #3 and the ember tray as shown in Figure 7. Install log by placing it on top of the log voids. The tip of the log may contact the Teco-Sil rock in the ember tray. See Figure 9.

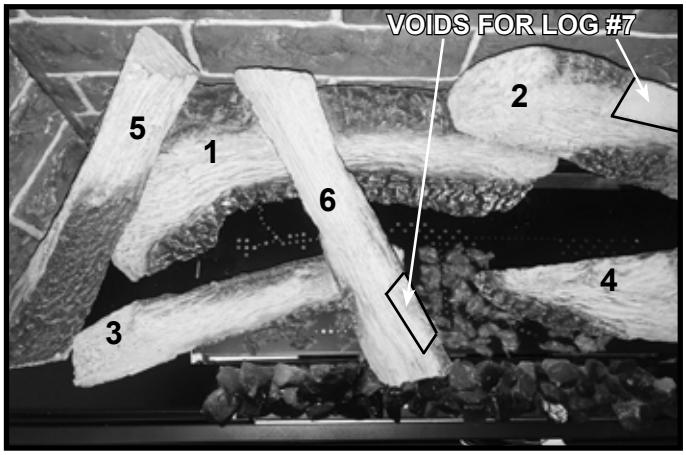

Figure 9 Install Log #6

8. **LOG #7:** Log #7 will rest on the two voids of Log #2 and Log #6 as shown in Figure 9, install log by placing it on top of these voids. Place the log so that the bark detail faces the back wall of the firebox. See Figure 10.

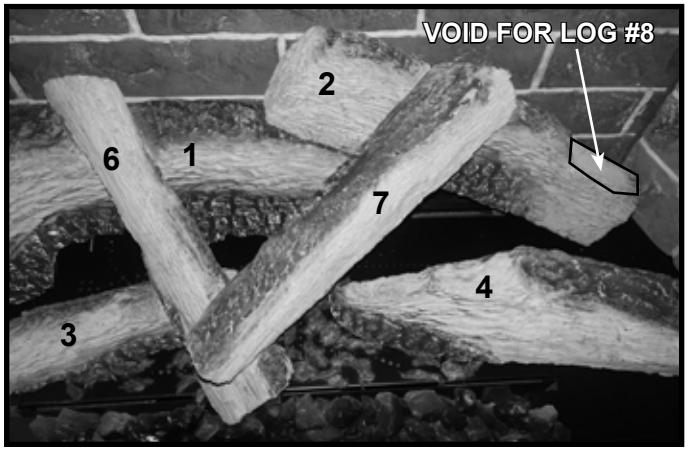

Figure 10 Install Log #7

9. **LOG #8:** Log #8 will rest on the void of Log #2 as shown in Figure 10 in the back right corner of the firebox. The right end of Log #8 will rest on the base pan. See Figure 11.

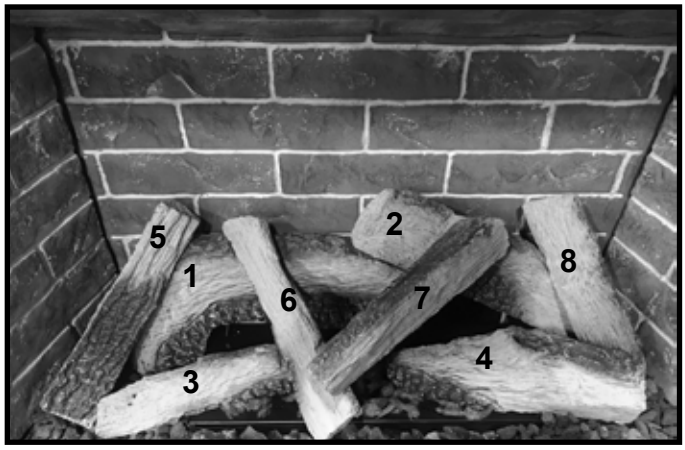

Figure 11 Install Log #8

10. This product is shipped with a bag of Lava Rock. Approximately one third of the bag will be used for initial setup, the remainder should be placed in the manual bag assembly and left with the homeowner. Do not store beneath the appliance. Install Lava Rock by placing it (by hand) in the locations denoted by arrows in Figure 12. Care should be taken to avoid placing lava rock on the burner.

NOTICE: *DO NOT place lava rock on burner. Flame appearance could be affected.*

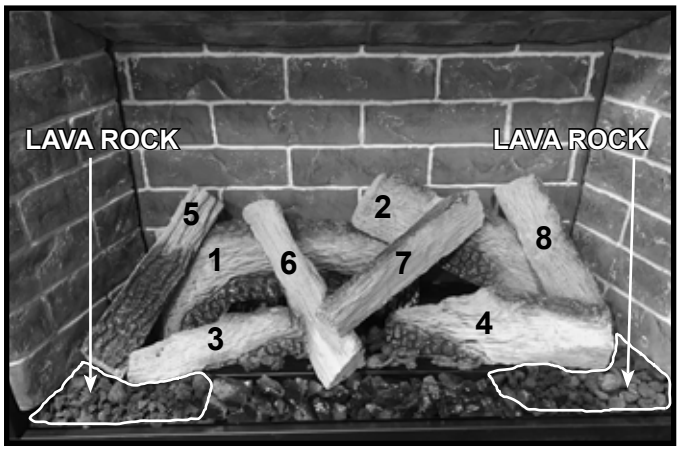

Figure 12 Lava Rock Locations

2643-935 Rev. B

F. IntelliFire Touch® Control System Setup

- Detailed instructions for electrical wiring and connections are provided in Section 8.
- Determine if this appliance is equipped with a Module Reset Switch. See Section 8. Verify this switch is in the ON position.
- Verify that the 3-Position switch on the IFT-ECM is switched to the REMOTE position. Detailed Operating Instructions for the IFT-ECM are provided in Section 3.K of the Owner's Manual.

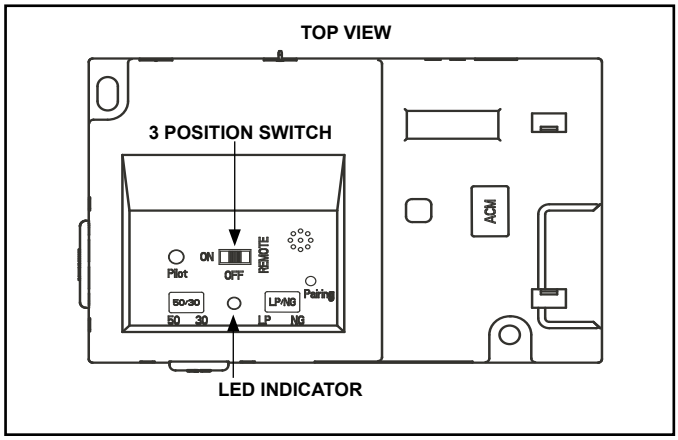

Figure 11.3 IFT-ECM

This appliance is factory-equipped with an IntelliFire-Touch remote control. The remote was paired to the fireplace and tested at the factory. It does not need to be paired again, unless an accessory kit will be added at the time of installation. If no additional accessory will be added, simply follow steps one through seven below.

1. If installed, remove batteries from remote.
2. Verify that the new appliance has power and secure electrical connections.
3. Adjust the ECM selector switch to 'REMOTE' mode.
4. Switch the master reset switch to 'ON' (if equipped).
5. Wait to verify LED indicator on the ECM stops flashing.
6. Install batteries in the RC400 remote.
7. The RC400 remote will automatically pair to the appliance as pre-set at the factory.

G. Fixed Glass Assembly Removal and Replacement

WARNING! Risk of Asphyxiation! *Handle fixed glass assembly with care. Inspect the gasket to ensure it is undamaged and inspect the glass for cracks, chips or scratches.*

- ***DO NOT*** *strike, slam or scratch glass.*
- ***DO NOT*** *operate fireplace with glass removed, cracked, broken or scratched.*
- *Replace as a complete assembly.*

Removing Fixed Glass Assembly

- Remove decorative barrier front from fireplace and set aside on work area.
- Pull the four glass assembly latches out of the groove on the glass frame. Remove glass assembly from the appliance. See Figure 11.4.

Replacing Fixed Glass Assembly

- Replace the glass assembly on the appliance. Pull out and latch the four glass assembly latches into the groove on the glass frame.
- Clean glass with a non-abrasive, non-ammonia based, commercially available gas fireplace glass cleaner.
  - Light deposits: Use a soft cloth with soap and water
  - Heavy deposits: Use commercial fireplace glass cleaner (consult with your dealer)
- Carefully set fixed glass assembly in place on fireplace. Hold glass in place with one hand and secure glass latches with the other hand.
- Inspect and operate all glass latches to ensure they move freely and no obstructions are present.
- Reinstall decorative barrier front.

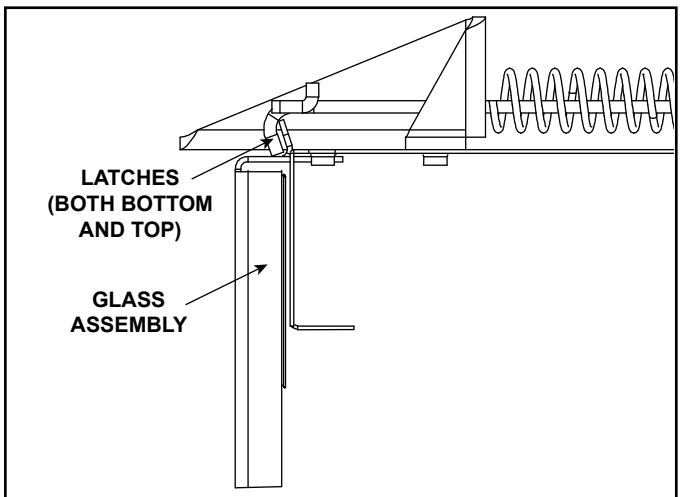

Figure 11.4 Fixed Glass Assembly

H. Install Decorative Barrier Front

WARNING! Risk of Fire! *Install ONLY decorative barrier fronts approved by Hearth & Home Technologies. Unapproved decorative barrier fronts could cause fireplace to overheat.*

IMPORTANT! This fireplace requires an installed decorative barrier front to prevent direct contact with the hot viewing glass. DO NOT operate the fireplace with the barrier removed.

Contact your dealer or Hearth & Home Technologies if the barrier is not present or help is needed to properly install one.

For more information refer to the instructions supplied with your decorative barrier front.

A. Vent Components Diagrams

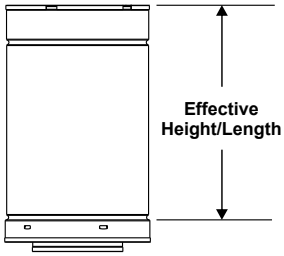

DVP Pipe (see chart)

Pipe	Effective Length	
	Inches	Millimeters
DVP4	4	102
DVP6	6	152
DVP12	12	305
DVP24	24	610
DVP36	36	914
DVP48	48	1219
DVP6A	3 to 6	76 to 152
DVP12A	3 to 12	76 to 305

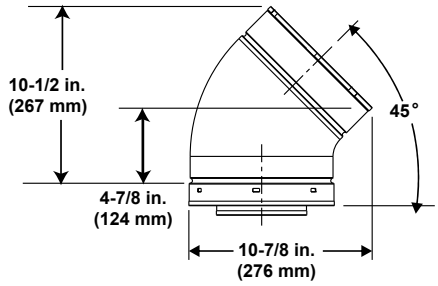

DVP45 (45º Elbow)

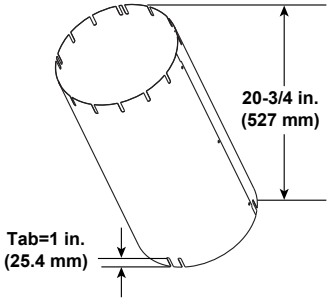

Finished Height: 19-3/4 in./502 mm
UNIV-AS2 (Attic Insulation Shield)

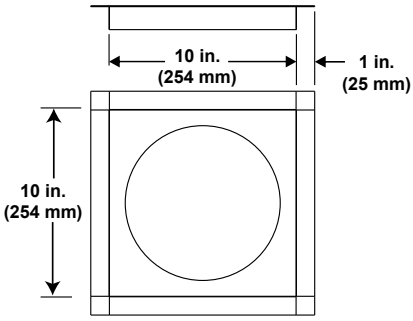

DVP-FS (Ceiling Firestop)

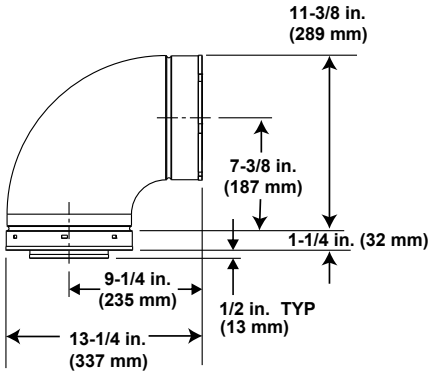

DVP90ST (90° Elbow)

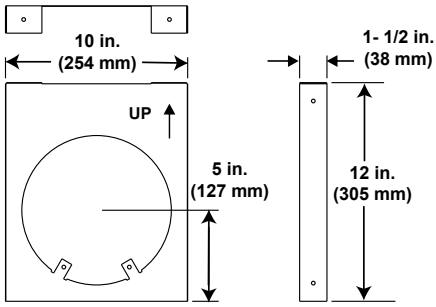

DVP-HVS (Vent Support)

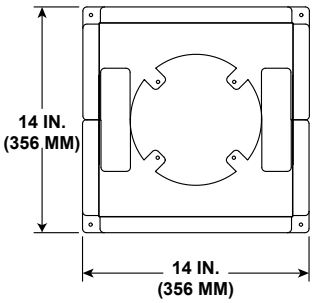

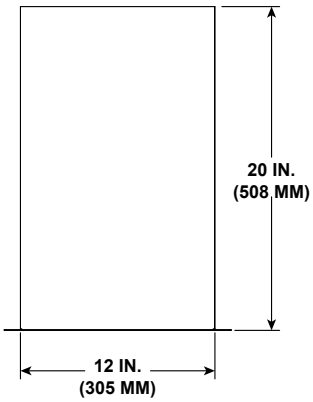

DVP-RDS
ROOF DECK INSULATION SHIELD

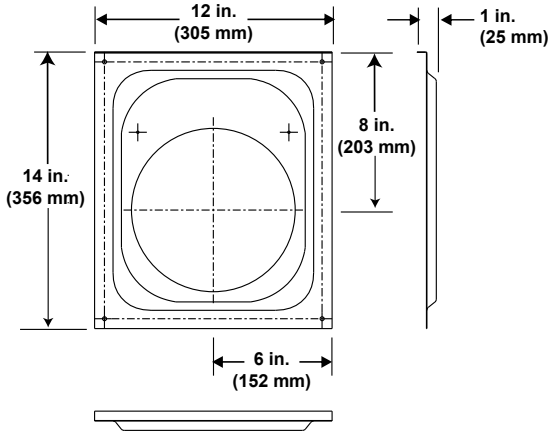

DVP-WS (Wall Shield Firestop)

Figure 12.1 DVP Vent Components

A. Vent Components Diagrams (*continued*)

Note: Heat shields MUST overlap by a minimum of 1-1/2 in. (38 mm). **The heat shield is designed to be used on a wall 4 in. to 7-1/4 in. (102 mm to 184 mm) thick.** If wall thickness is less than 4 in. (102 mm) the existing heat shields must be field trimmed. If wall thickness is greater than 7-1/4 in. (184 mm) a DVP-HSM-B will be required.

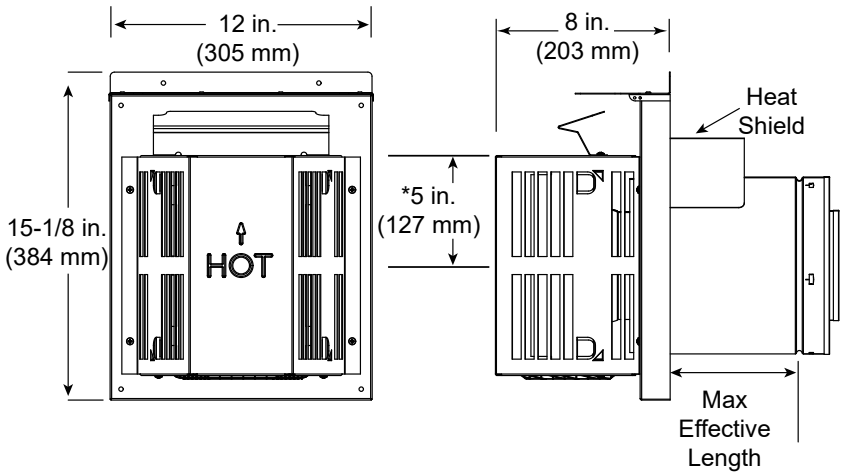

DVP-TRAP
Horizontal Termination Cap

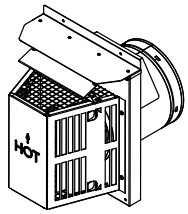

* Center of the horizontal vent pipe to the vertical measuring surface.

Term Cap	Minimum Effective Length	Maximum Effective Length
Trap1	3-1/8 in.	4-5/8 in.
	79 mm	117 mm
Trap2	5-3/8 in.	9-3/8 in.
	137 mm	238 mm

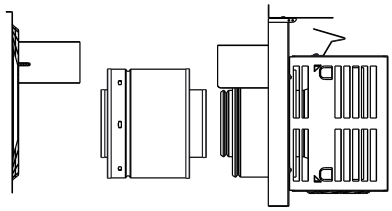

DVP-TRAP1

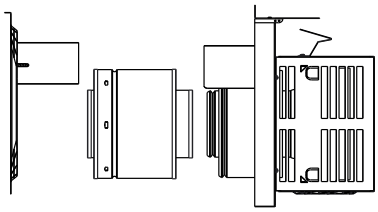

DVP-TRAP2

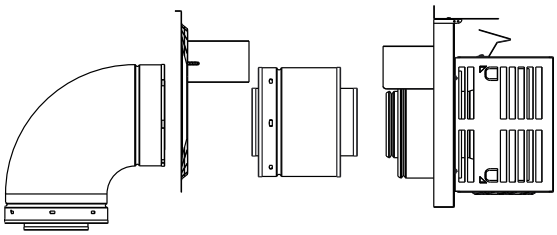

DVP-TRAPK1

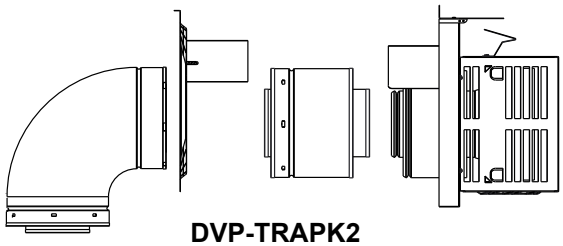

DVP-TRAPK2

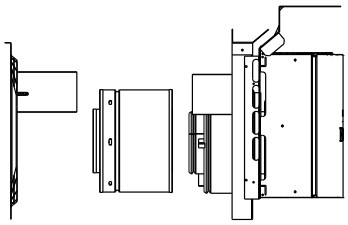

DVP-HPC1
Can adjust 2-1/8 in. (4-1/4 to 6-3/8)

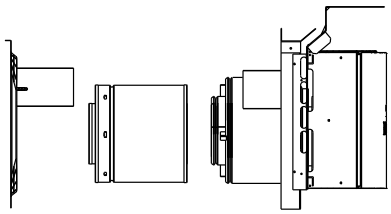

DVP-HPC2
Can adjust 4-1/8 in. (6-3/8 to 10-1/2)

Figure 12.2 DVP Vent Components

A. Vent Components Diagrams (*continued*)

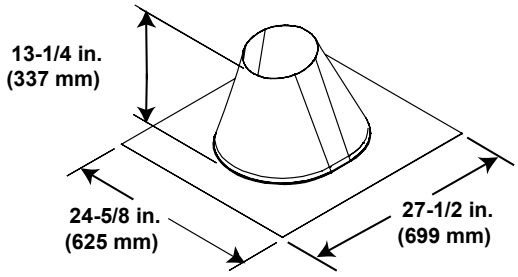

RF6
Roof Flashing

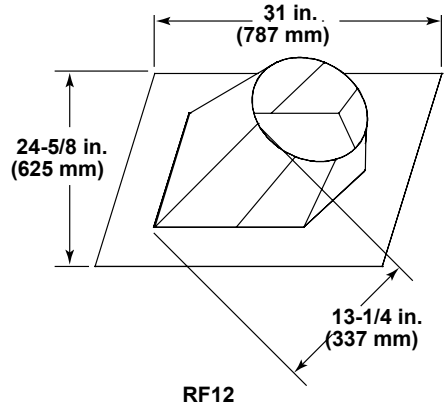

RF12
Roof Flashing

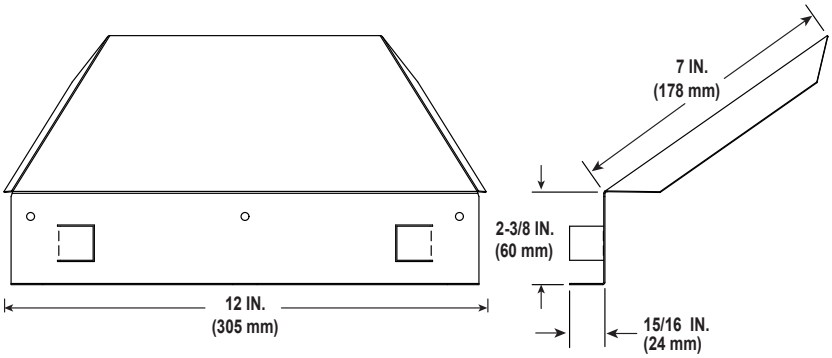

TRAP-VSS
Vinyl Siding Shield

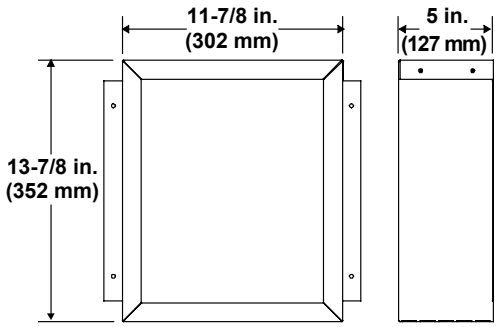

DVP-BEK2
DVP-HPC Cap Brick Extension

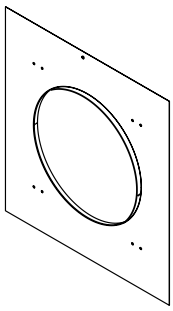

DVP-TRAPFL
Flashing

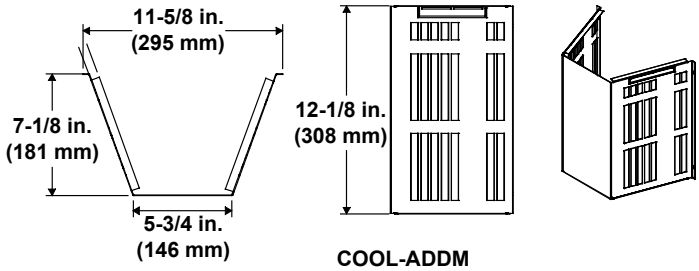

COOL-ADDM
Cap Shield

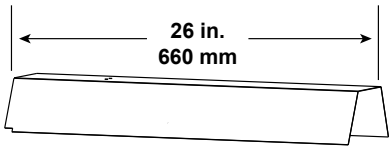

DVP-HSM-B
Extended Heat Shield

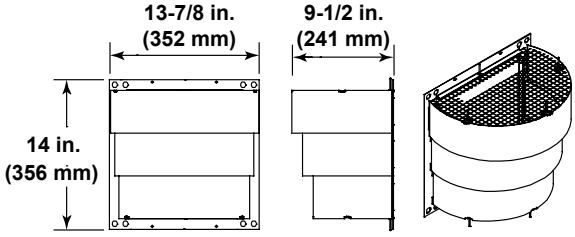

DRC-RADIUS
Cap Shield

Figure 12.3 DVP Vent Components

A. Vent Components Diagrams (*continued*)

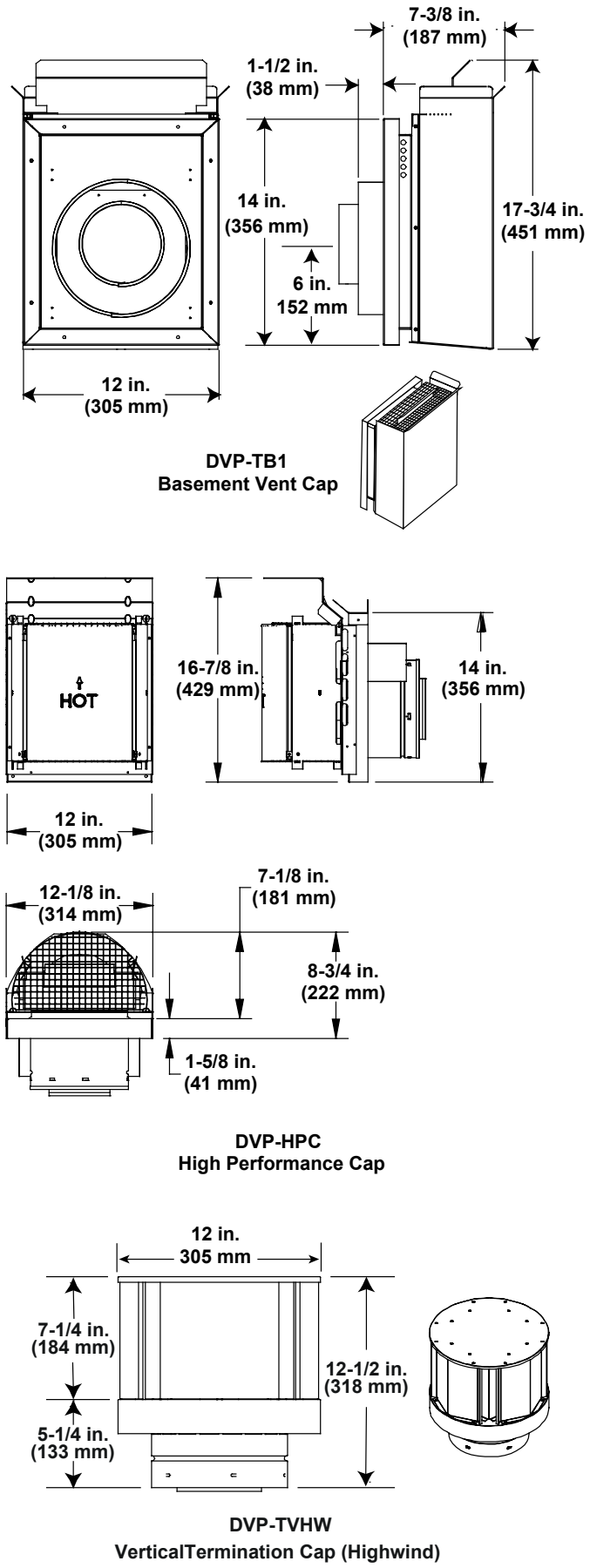

Figure 12.4 DVP Vent Components

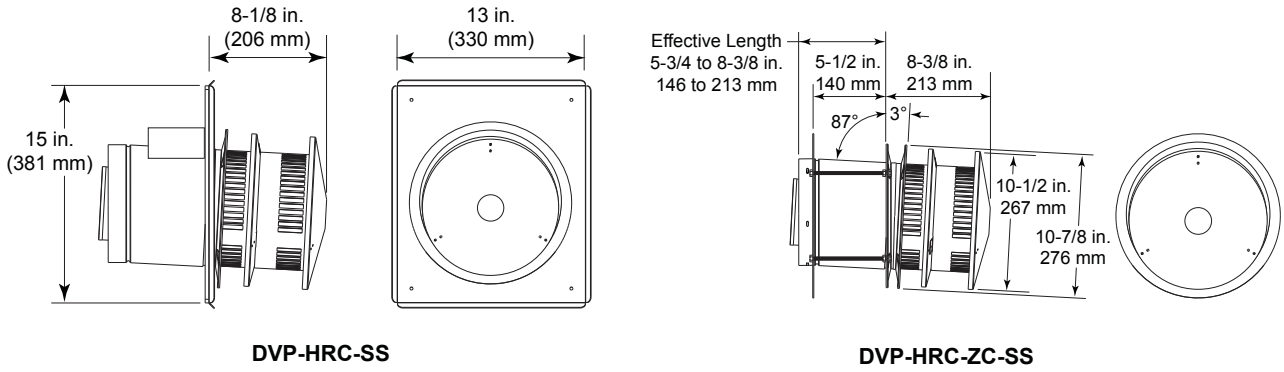

Figure 12.5 DVP Vent Components

DECORATIVE TERMINATIONS/SHROUDS

Only use listed decorative termination caps/shrouds with Hearth & Home Technologies approved venting systems.

This applies to both DVP and SLP venting systems.

Decorative Terminations Caps/Shrouds

DTO134
DTO146
DTS134
DTS146
LDS33
LDS46
LDS-BV

A. Vent Components Diagrams *(continued)*

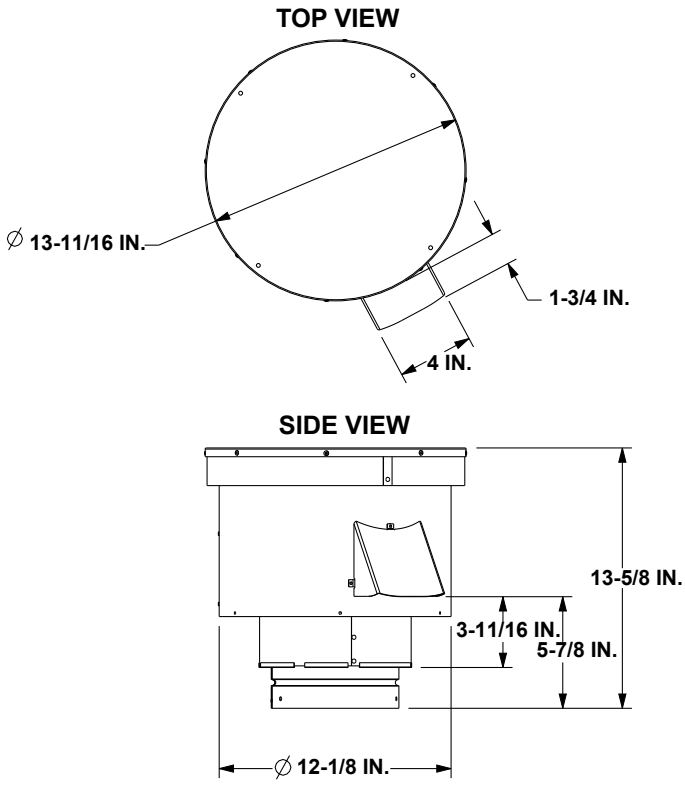

PVV-SLP
Vertical Power Vent

Required Wire Harness and PVV-SLEEVE	
Lengths Available	**Part Number**
10 ft. PV Wire Harness	PVI-WH10
20 ft. PV Wire Harness	PVI-WH20
40 ft. PV Wire Harness	PVI-WH40
60 ft. PV Wire Harness	PVI-WH60
80 ft. PV Wire Harness	PVI-WH80
100 ft. PV Wire Harness	PVI-WH100
Description	**Part Number**
12 in. Wire Harness Sleeve	PVV-SLEEVE-12
48 in. Wire Harness Sleeve	PVV-SLEEVE-48

Note: A wire harness is required to power the PVV-SLP and connect it to the appliance. It is ordered separately from the PVV-SLP. Contact your dealer to order.

Note: The PVV-SLEEVE-12 and/or PVV-SLEEVE-48 is required to be installed with the PVV-SLP. It is ordered separately from the PVV-SLP. Contact your dealer to order.

Note: The PVV-SLP requires one of the following options to be installed on this appliance.
Option A: IFT-RC400 and/or IFT-WFM, IFT-ACM and IntelliFire App that can be downloaded from the app store.
OR
Option B: IFT-RC150, IFT-ACM, IFT-WFM and an IntelliFire App that can be downloaded from the app store. These accessories are purchased separately from the PVV-SLP. Contact your dealer to order.

Figure 12.6 PVV-SLP Vent Components

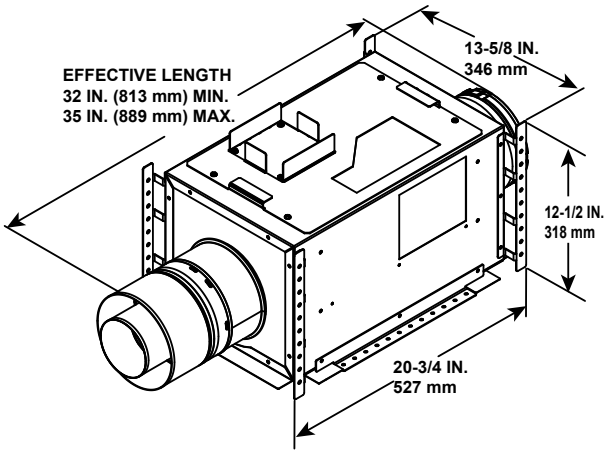

PVI-SLP-B
Power Vent Inline

Optional Wire Harness	
DESCRIPTION	**PART NUMBER**
10 FT PV Wire Harness	PVI-WH10
20 FT PV Wire Harness	PVI-WH20
40 FT PV Wire Harness	PVI-WH40
60 FT PV Wire Harness	PVI-WH60
80 FT PV Wire Harness	PVI-WH80
100 FT PV Wire Harness	PVI-WH100

Note: Wire harnesses required to power the PVI-SLP-B connect to the appliance and are ordered separately from PVI-SLP-B. Contact your dealer to order.

Note: The PVI-SLP-B requires one of the following options to be installed on this appliance.
Option A: IFT-RC400 and/or IFT-WFM, IFT-ACM and IntelliFire App that can be downloaded from the app store.
OR
Option B: IFT-RC150, IFT-ACM, IFT-WFM and an IntelliFire App that can be downloaded from the app store. These accessories are purchased separately from the PVI-SLP-B. Contact your dealer to order.

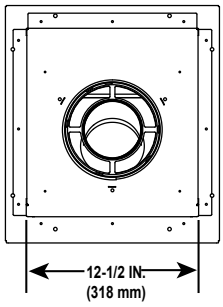

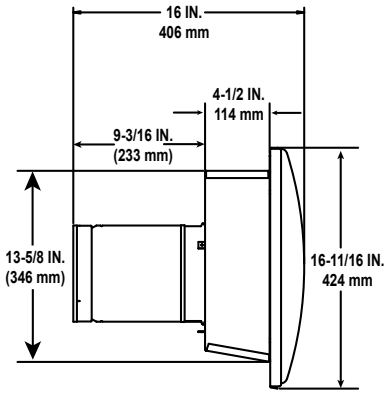

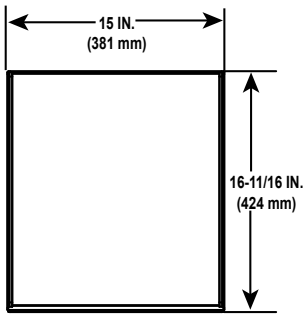

SLP-LPC
SLP Low Profile Cap
(Approved for use with PVI-SLP-B only)

Figure 12.7 PVI-SLP-B Vent Components

A. Vent Components Diagrams *(continued)*

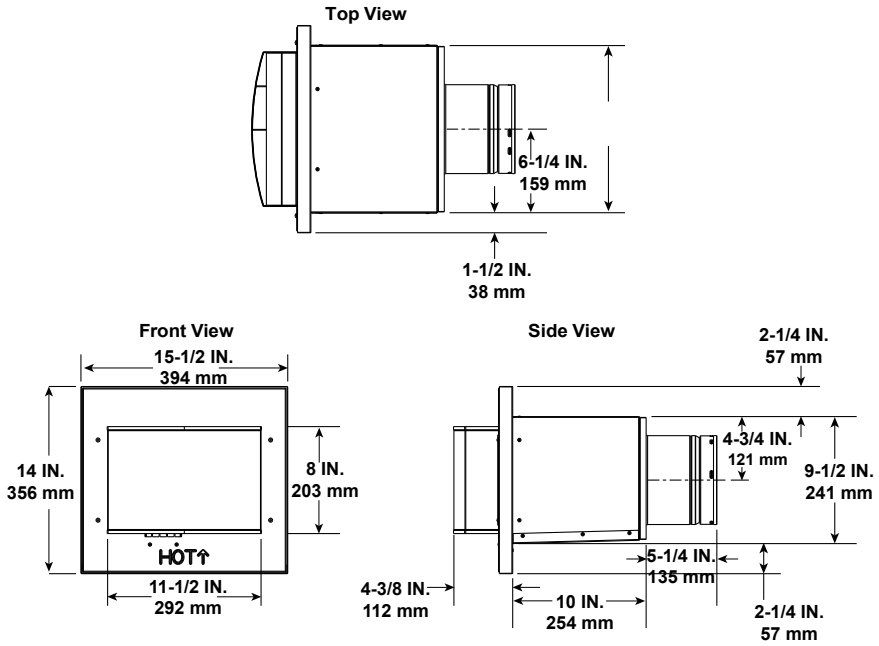

PVLP-SLP
Power Vent Low Profile

Note: A PVLP-HS heat shield is available and sold separately. Use if the PVLP-SLP is installed in a high traffic area.

Note: Wire harnesses required to power the PVLP-SLP connect to the appliance and are ordered separately from PVLP-SLP. Contact your dealer to order.

Note: The PVLP-SLP requires one of the following options to be installed on this appliance.
Option A: IFT-RC400 and/or IFT-WFM, IFT-ACM and IntelliFire App that can be downloaded from the app store.
OR
Option B: IFT-RC150, IFT-ACM, IFT-WFM and an IntelliFire App that can be downloaded from the app store. These accessories are purchased separately from the PVLP-SLP. Contact your dealer to order.

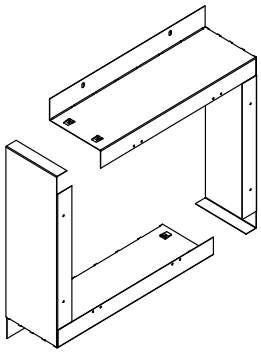

PVLP-BEK
Brick Kit

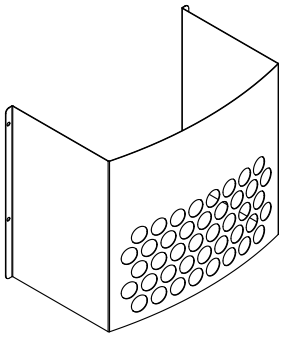

PVLP-HS
Heat Shield

Required Wire Harness	
DESCRIPTION	PART NUMBER
10 FT PV Wire Harness	PVI-WH10
20 FT PV Wire Harness	PVI-WH20
40 FT PV Wire Harness	PVI-WH40
60 FT PV Wire Harness	PVI-WH60
80 FT PV Wire Harness	PVI-WH80
100 FT PV Wire Harness	PVI-WH100

Figure 12.8 PVLP-SLP Vent Components

A. Vent Components Diagrams *(continued)*

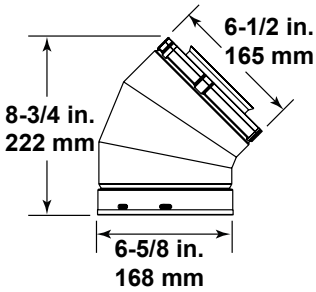

SLP45
45° Elbow

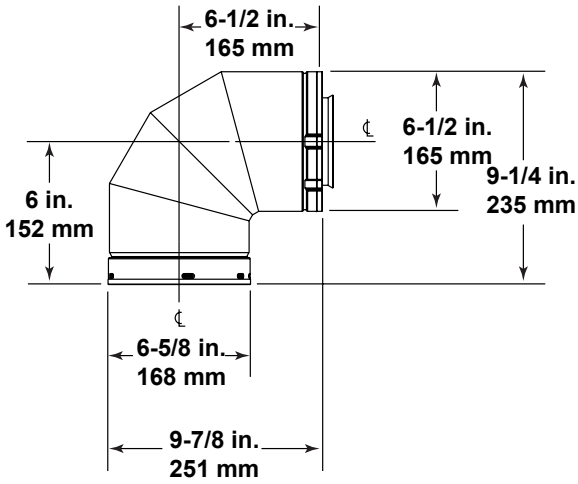

SLP90
90° Elbow

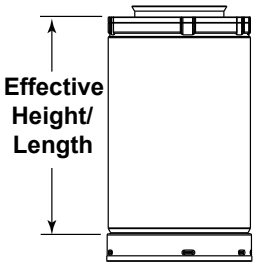

SLP PIPE

Effective Height/Length

Pipe	*inches*	*mm*
SLP4	4	102
SLP6	6	152
SLP12	12	305
SLP24	24	610
SLP36	36	914
SLP48	48	1219
SLP6A	2 - 6	51 - 152
SLP12A	2 - 12	51 - 305
SLP-FLEX-3	36	914
SLP-FLEX-5	60	1524
SLP-FLEX-10	120	3048

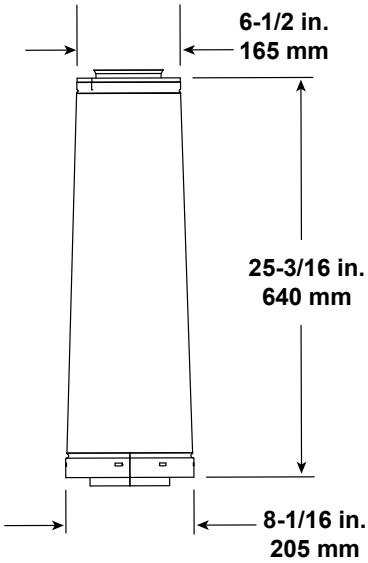

DVP-SLP24
Adapter

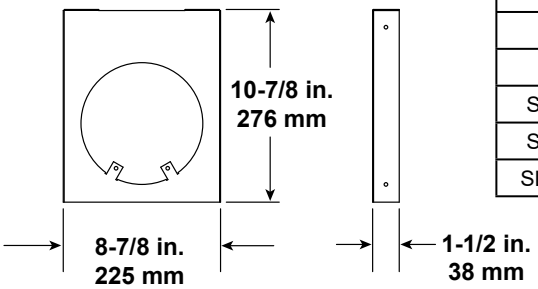

SLP-HVS
Horizontal Pipe
Support

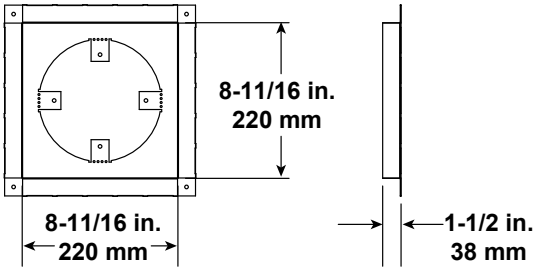

SLP-FS
Ceiling Firestop

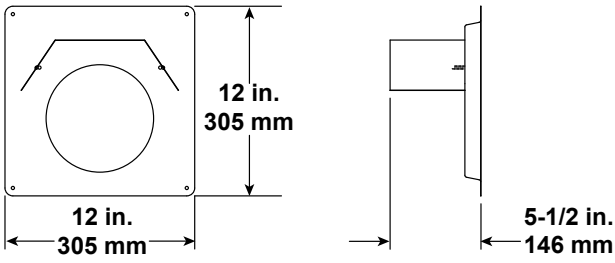

SLP-WS
Wall Shield Firestop

Figure 12.9 SLP Series Vent Components

A. Vent Components Diagrams *(continued)*

Note: Heat shields MUST overlap by a minimum of 1-1/2 in. (38 mm). The heat shield is designed to be used on a wall 4 in. to 7-1/4 in. (102 mm to 184 mm) thick. If wall thickness is less than 4 in. (102 mm) the existing heat shields must be field trimmed. If wall thickness is greater than 7-1/4 in. (184 mm) a DVP-HSM-B will be required.

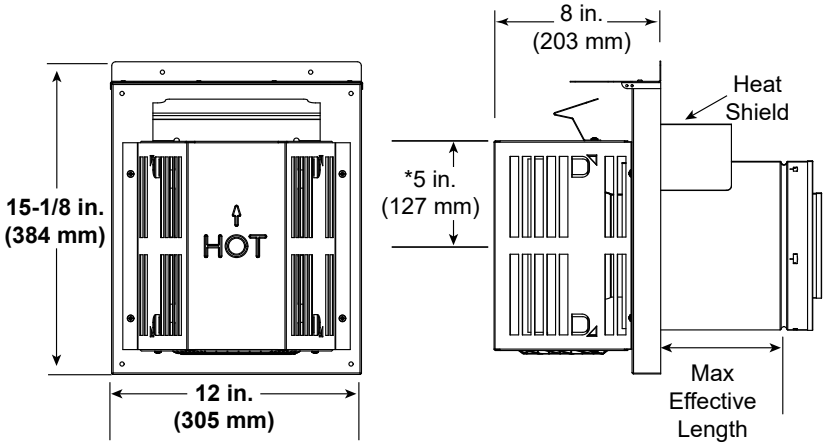

SLP-TRAP
Horizontal Termination Cap

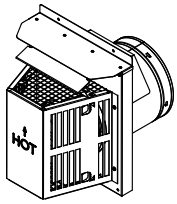

* Center of the horizontal vent pipe to the vertical measuring surface.

Term Cap	Minimum Effective Length	Maximum Effective Length
Trap1	3-1/8 in.	4-3/4 in.
	79 mm	121 mm
Trap2	5-1/4 in.	9-1/4 in.
	133 mm	235 mm

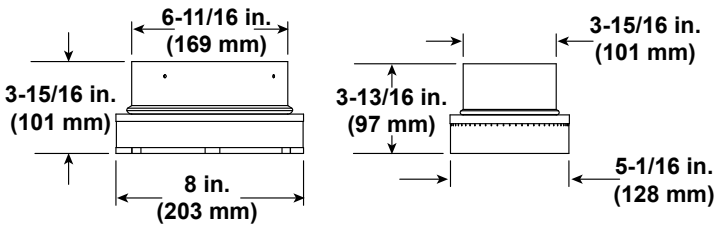

SL-2DVP
Adapter

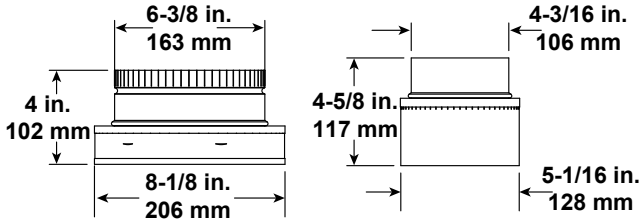

DVP-2SL
Adapter

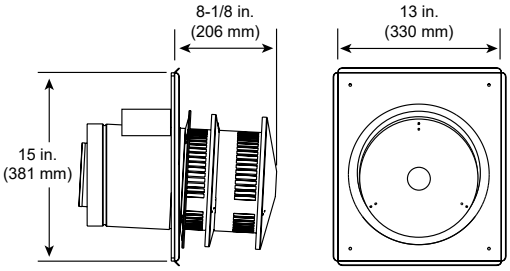

SLP-HRC-SS
Horizontal Termination Cap

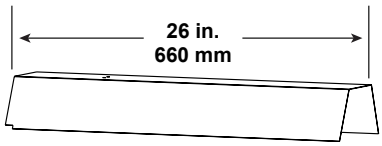

DVP-HSM-B
Extended Heat Shield

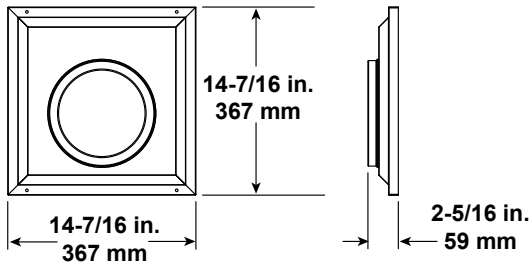

SLP-WT-BK
Wall Thimble-Black

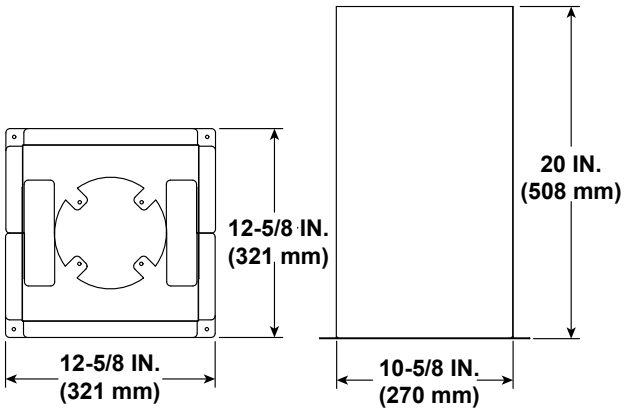

SLP-RDS
ROOF DECK INSULATION SHIELD

Figure 12.10 SLP Series Vent Components

A. Vent Components Diagrams *(continued)*

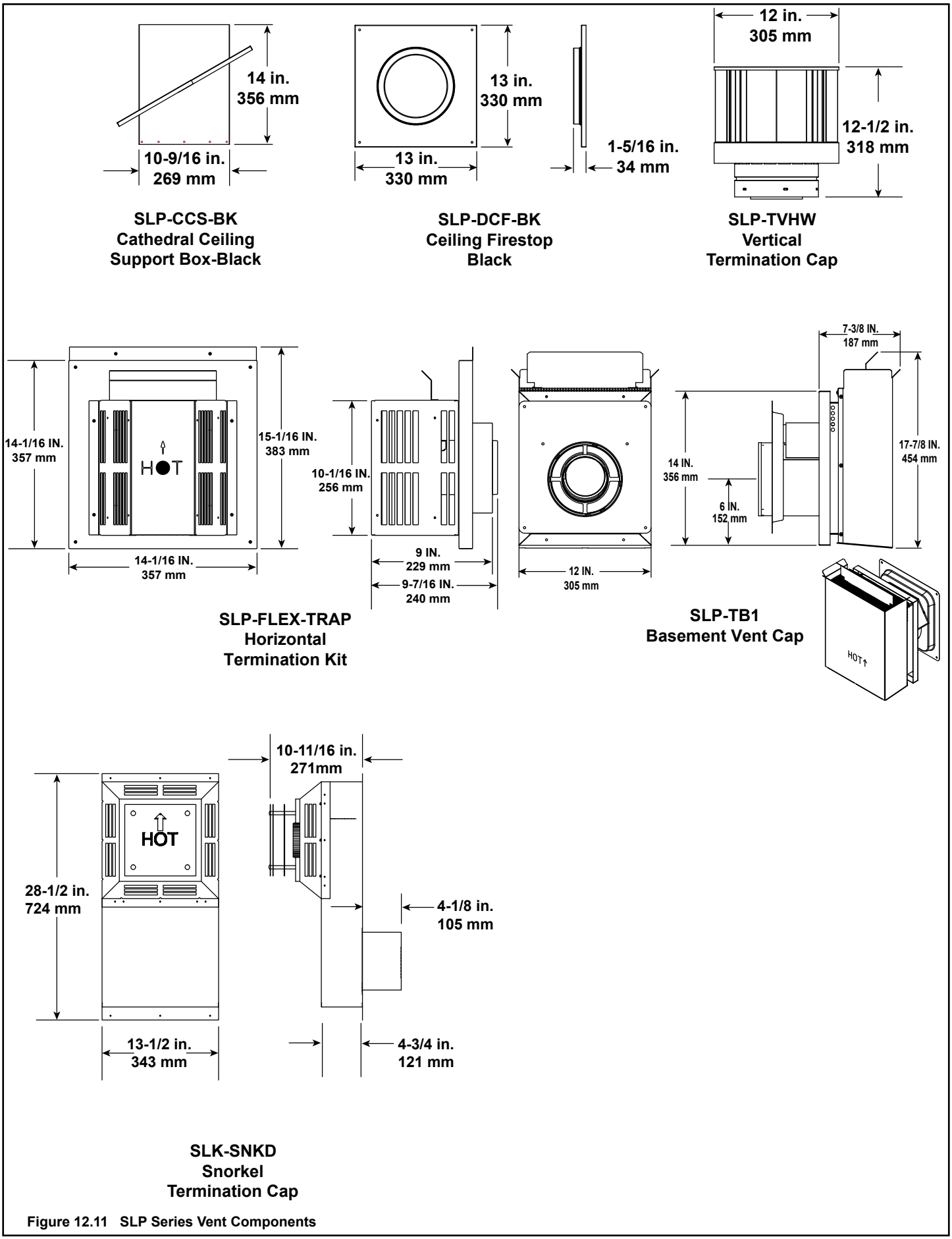

Figure 12.11 SLP Series Vent Components

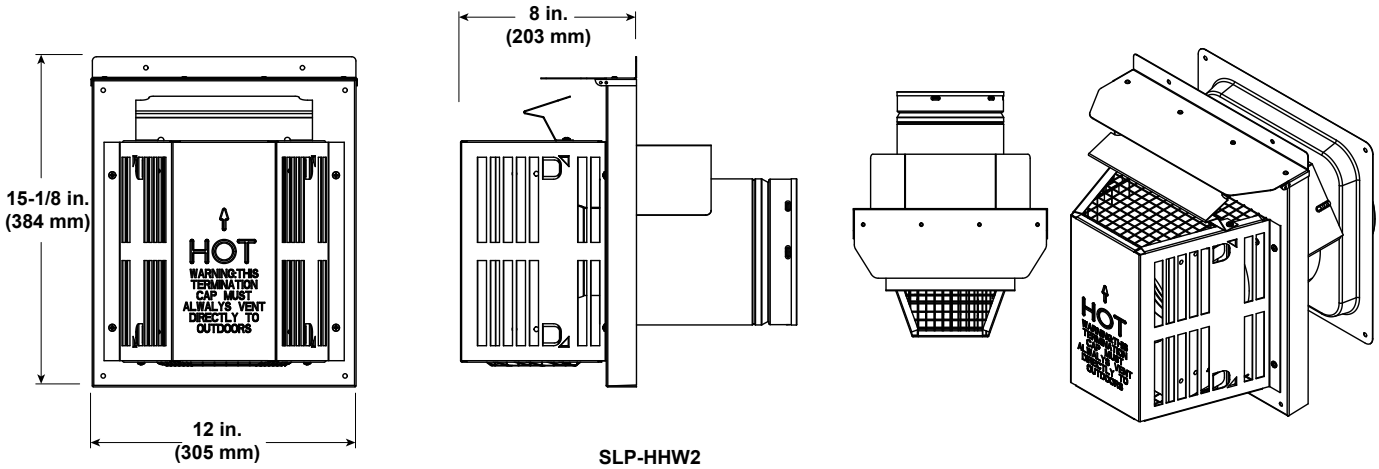

SLP-HHW2
Horizontal High Wind Termination Cap

Figure 12.12 SLP series Vent Components

COAXIAL to COLINEAR VENTING

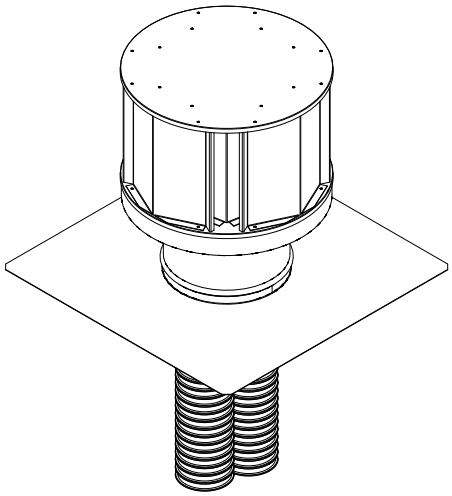

LINK-DV30B
Flex Liner Kit

768-380A
Required Stainless Steel Flex Pipe

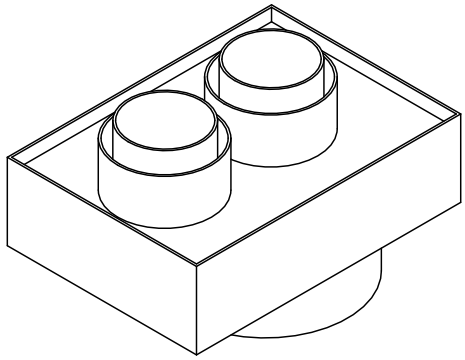

DV-46DVA-GCL
Coaxial/Colinear Appliance Connector

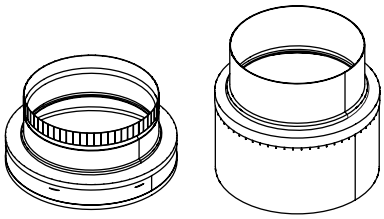

DVP-2SL
Adapter

Figure 12.13 Coaxial to Colinear Vent Components

B. Accessories

WARNING! Risk of Fire and Electric Shock! *Use ONLY Hearth & Home Technologies-approved optional accessories with this appliance. Using non-listed accessories could result in a safety hazard and will void the warranty.*

Contact your dealer for more information and details, such as color options, on individual accessories. A qualified service technician must install the approved accessories. Operate installed accessories according to the included instructions.

Note: Some optional accessories must be installed at the time of appliance installation. See Section 2.A.

Options:

Remote Controls, Wall Controls and Wall Switches	
IFT-RC150-HNG	IntelliFire Touch wireless wall switch
IntelliFire Wi-Fi module with IntelliFire App	
IFT-WFM	IntelliFire Wi-Fi module for app
Refractory Kits (Quantity 1 Required)	
BRICK36TBPLA	Brick Refractory Kit, Tavern Brown
GLQUARTZ36PLA	Reflective Black Glass Refractory Kit
Heat Management Systems Kits	
HEAT-OUT-GAS	Heat-Out-Gas Kit
HEAT-ZONE-GAS	Heat-Zone-Gas Kit

Majestic, a brand of Hearth & Home Technologies
7571 215th Street West, Lakeville, MN 55044
www.majesticproducts.com

Please contact your Majestic dealer with any questions or concerns.
For the location of your nearest Majestic dealer,
please visit www.majesticproducts.com.

Printed in U.S.A. - Copyright 2024