CAUTION:

Electrical and plumbing connections should be made by a qualified Service Person who will comply with all available federal, state, and local Health, Electrical, Plumbing, and Safety Codes. American Dish Service cannot be held liable for improper or faulty installation of this equipment.

*** American Dish Service reserves the right to modify these specifications in compliance with regulatory agencies and manufacturing expediency without prior notification.**

TYPICAL TABLE DETAILS

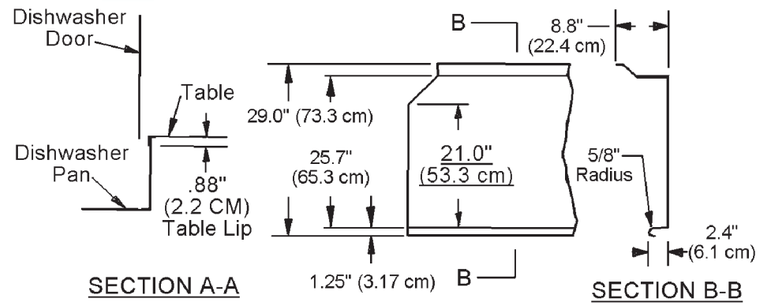

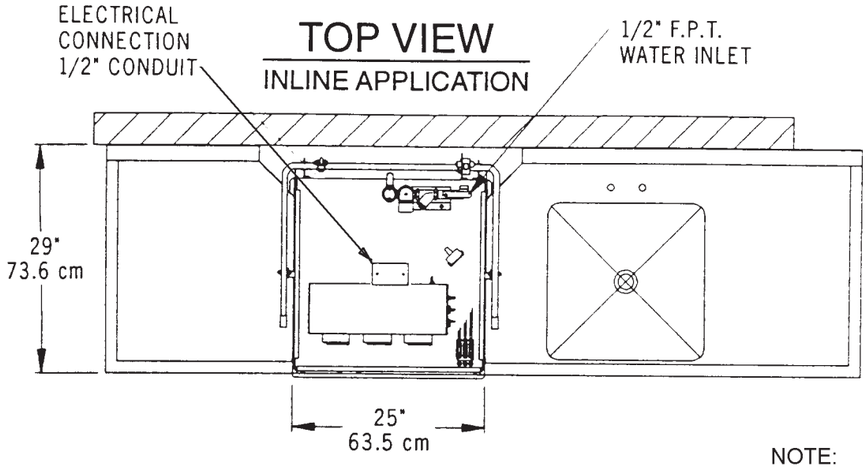

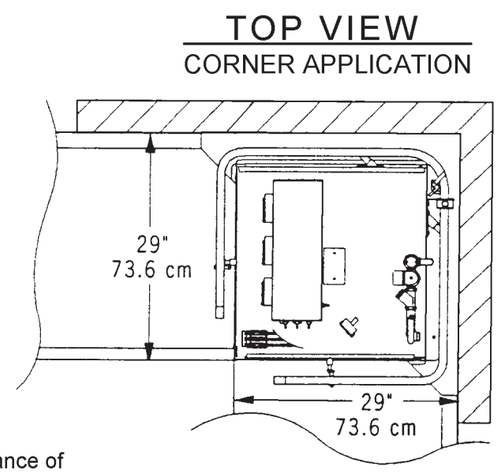

NOTE:
All dimensions listed have a tolerance of + or - 1/8" unless otherwise noted.

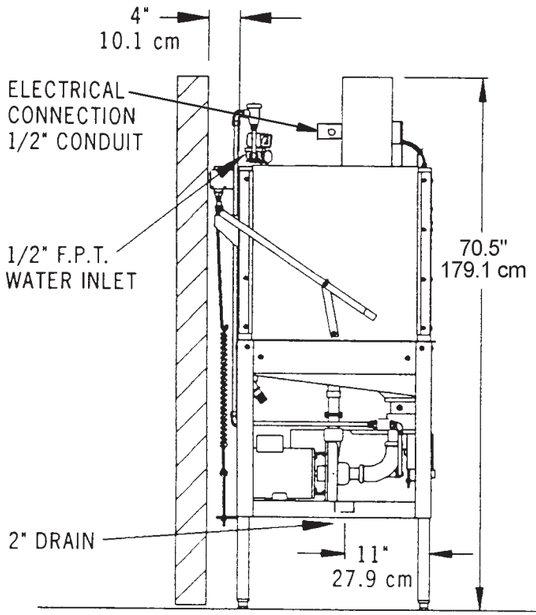

SIDE VIEW

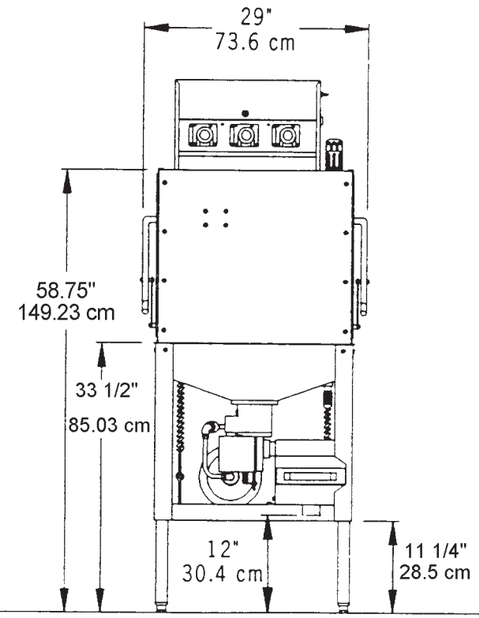

FRONT VIEW

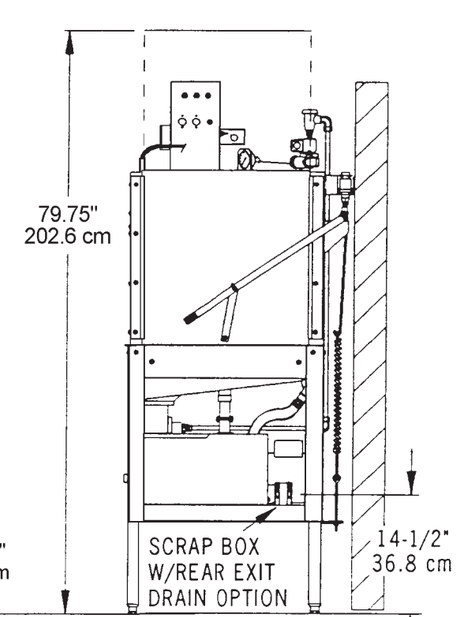

SIDE VIEW

Effective: 03/2008

American Dish Service
Manufacturers of Ware Washing Equipment

WWW.AMERICANDISH.COM

L-3DW-S

	L-90-3DW-S L-90-3DWC-S
NSF RATED CAPACITY (RACKS/HOUR)	37
WASH TIME (IN SECONDS)	50
RINSE TIME (IN SECONDS)	30
DWELL (IN SECONDS)	10
GALLONS PER HOUR	44
TOTAL CYCLE TIME (IN SECONDS)	90

WATER TEMPERATURE OF SUPPLY WATER (**NSF**) ..... 120° F. MINIMUM or 49. Celsius

WATER CONSUMPTION (**NSF** RATED) ..... 1.2 GALS. PER CYCLE or 4.5 liters/cycle

MOTOR RATING ..... (1.125 KW) 1.5 HORSEPOWER

ELECTRICAL RATING (**NEC**) .....115 Vac, 20amp breaker, 50/60Hz, 1 phase

Connect to Supply Source using 10-12 AWG Copper wires using non-time delay fuse of 20 amp rating or 20 amp circuit breaker.

RACK SIZE ..... STANDARD 19.75" X 19.75" or 50.2 x 50.2 cm

DOOR CLEARANCE ..... 20.375" TALL x 20.5" WIDE or 51.75 x 52.07 cm

WATER INLET ..... (1/2") F.P.T.

DRAIN SIZE *(Scrap Trap)* ..... (2")

HEIGHT *(ADJUSTER FEET WILL GIVE)* MIN: 70.5", MAX: 71.48" or 179.1 to 181.56 cm

WIDTH (OVERALL) ..... 29" or 73.6 cm

WIDTH, TABLE TO TABLE (INLINE MODEL) ..... 25" or 63.5 cm

DEPTH (OVERALL) ..... 28" or 71.1 cm

SHIPPING WEIGHT ..... 300 Lbs. 136.1 kg

SHIPPING DIMENSIONS .... 36" L x 36" W x 78" H 91.4 cm x 91.4 cm x 198.1 cm

© 03/2008