Form No. 3444-216 Rev D

Steel Tub

Material Buggies

Model No. 68101—Serial No. 321000001 and Up

Installation Instructions

Safety

Safety and Instructional Decals

Safety decals and instructions are easily visible to the operator and are located near any area of potential danger. Replace any decal that is damaged or missing.



decal133-8061

133-8061

1. Park the machine on a level surface, engage the parking brake, lower the hopper, shut off the engine, and remove the key.
2. Remove the existing tub; retain the hardware.
3. Secure the new tub to the frame using the previously removed 4 bolts, 4 washers, and 4 nuts.

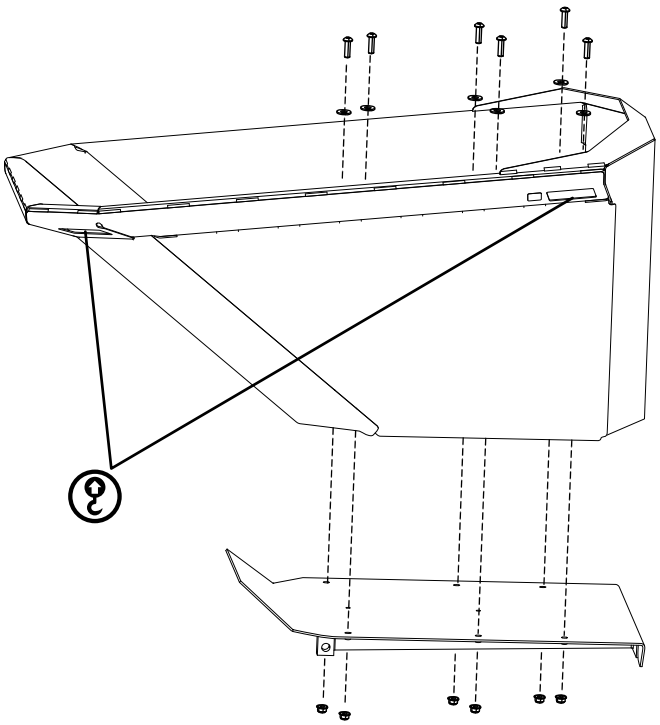

g347428

Figure 1

© 2021—The Toro® Company
8111 Lyndale Avenue South
Bloomington, MN 55420

Register at www.Toro.com.

CE

Original Instructions (EN)
Printed in the USA
All Rights Reserved

3444-216

⚠ WARNING

Using a drill without proper eye protection may allow debris to enter the eye, causing injury.

When drilling, always wear eye protection.

4. Using the new tub as a template, mark and drill 2 holes (9/16 inch).

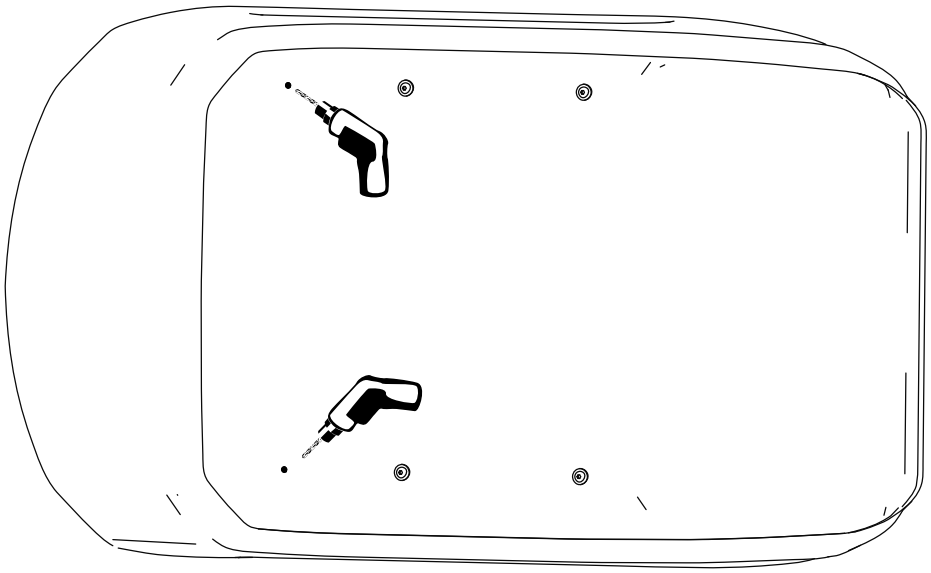

g322994

Figure 2

5. Install the remaining hardware to secure the tub to the frame.

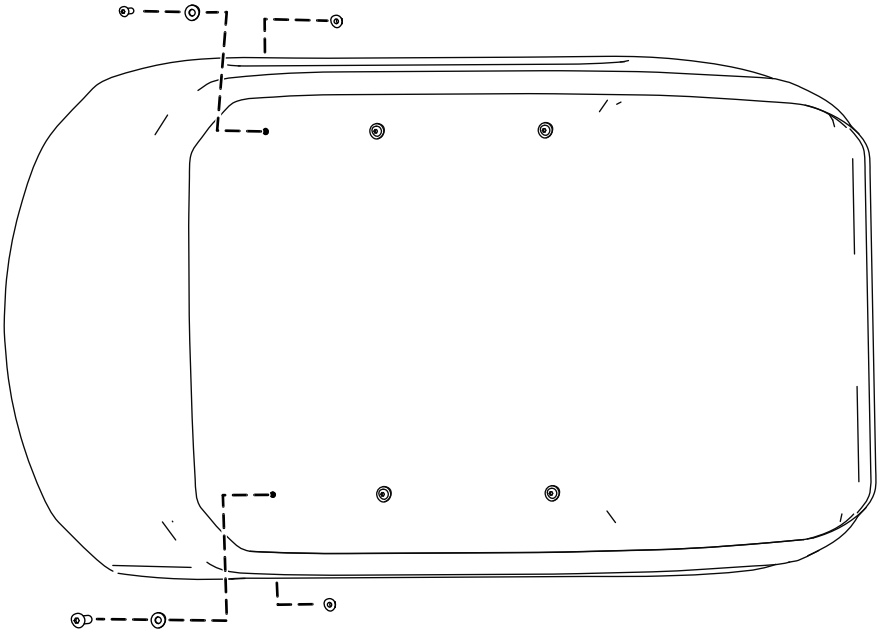

g322996

Figure 3

6. Torque the bolt to 37 to 45 N·m (27 to 33 ft-lb).