EdenPURE®

GEN70 Super Personal Heater/Cooler

OWNER'S MANUAL

Model No. A6042

IMPORTANT
SAVE THESE INSTRUCTIONS

To ensure you get the best results, please read this manual first and keep it for future reference. For additional information, please contact your place of purchase or call 1-800-225-6595.

Thank you for choosing EdenPURE®

C ETL LISTED US
Intertek

Thank you for choosing the EdenPURE® GEN70 Super Personal Heater/Cooler. This owner's manual will provide you with valuable information necessary for the proper care and maintenance of your new product. Please take a few minutes to thoroughly read the instructions and familiarize yourself with your new heater.

This heater is equipped with a light-touch button and front indicator light (red as the heater, blue as the fan). It has a large fan to quietly provide heat. The tilted design is for safety purposes. The heater can be rotated to heat a wider area. It has a handle on the back for easy carrying.

The EdenPURE® GEN70 Super Personal Heater/Cooler uses the PTC as the thermal unit, which enables the unit to heat up quickly, have a high conversion rate, no exposed flames, and free oxygen consumption so it's suitable for your home or office.

SPECIFICATIONS

Name: EdenPURE® GEN70 Super Personal Heater/Cooler
Model: A6042
Electric Shock Class: II
Rated Voltage: 120V
Rated Power: 450W/950W
Rated Frequency: 60Hz

IMPORTANT INSTRUCTIONS

WARNING

IMPROPER USE OF THIS HEATER COULD RESULT IN RISK OF FIRE, ELECTRIC SHOCK, AND INJURY TO PERSONS

WARNING

WHEN OUT OF WARRANTY ALL REPAIRS SHOULD BE DONE BY A QUALIFIED ELECTRICIAN. PARTS ARE AVAILABLE ON WWW.EDENPURE.COM. PLEASE CONTACT OUR SUPPORT CENTER FOR ANY PRODUCT REQUIRING REPAIR DURING THE ONE YEAR WARRANTY PERIOD. CALL 1-800-225-6595 OR VISIT WWW.EDENPURESUPPORT.COM.

RISK OF ELECTRICAL SHOCK DO NOT OPEN
NO USER-SERVICEABLE PARTS INSIDE

1. Read ALL instructions before using the EdenPURE® GEN70 Super Personal Heater/Cooler.
2. CAUTION: Risk of Electric Shock: DO NOT open or try to repair the heater yourself.
3. This heater may get hot when in use. To avoid burns, DO NOT let bare skin touch hot surfaces.
4. Keep combustible materials such as furniture, pillows, bedding, paper, clothes and curtains at least 3 ft. from the front, sides and rear of the heater.
5. DO NOT place towels or other objects on the heater.

6. The front screen is for the protection of the user. DO NOT touch the screen while the heater is running.
7. Extreme caution is necessary when any heater is used by or near children or the disabled, or when the heater is left operating and unattended.
8. DO NOT operate any heater with a damaged cord or if the heater malfunctions, has been dropped or damaged in any manner. Return heater to authorized service facility for examination, electrical or mechanical adjustment or repair.
9. DO NOT angle the heater more than 10 degrees. Do not lay it down.
10. DO NOT put this heater where it may fall into a bathtub, sink or in contact with water. DO NOT immerse in water or other liquids.
11. DO NOT touch the control panel or plug with wet hands.
12. DO NOT run cord under carpeting. DO NOT cover cord with throw rugs, runners or similar coverings. Arrange cord away from traffic area and where it will not be tripped over.
13. DO NOT insert or allow foreign objects to enter any ventilation or exhaust opening as this may cause an electric shock or fire, or damage the heater.
14. To prevent a possible fire, DO NOT block the air intakes or exhaust in any manner. DO NOT use on soft surfaces, like a bed, where openings may be blocked.
15. A heater has hot and arcing or sparking parts inside. DO NOT use in areas where gasoline, paint, explosive and/or flammable liquids are used or stores. Keep unit away from heated surfaces and open flames.
16. Do not plug the unit into any other cord-connected device such as a power strip, surge protector, multiple outlet adaptor, grounding adaptor or outlet-type air fresheners. Plug into a 110V 15 amp or higher grounded circuit receptacle only. Do not plug the heater into a loose fitting or broken receptacle. This heater is for use in 110 volt outlets.
17. To avoid fire or shock hazard, plug the unit directly into a 110V AC electrical outlet.
18. To disconnect heater, turn the control to OFF, then remove the plug from the outlet. Pull firmly on the plug, DO NOT unplug by pulling the cord.
19. Always unplug the unit before moving or cleaning, or whenever the heater is not in use.
20. Use only for intended household uses as described in this manual. Any other use not recommended by the manufacturer may cause fire, electric shock, or injury. The use of attachments not recommended or sold by authorized dealers may be hazardous.
21. Always use on a dry, level surface.
22. DO NOT use outdoors or on construction sites.
23. WARNING: To reduce the risk of fire or electric shock, DO NOT use this unit with any solid-state speed control device.
24. DO NOT attempt to repair or adjust any electrical or mechanical functions on this unit. Doing so will void your warranty. The inside of the unit contains no user serviceable parts. Qualified personnel should perform all servicing.
25. When cleaning the surface of the heater, make sure it is turned off and clean with a soft cloth and soap.
26. Don’t use the heater in high temperatures, high humidity, or dusty areas.
27. Save these instructions.

OPERATING INSTRUCTIONS

Please verify the unit is undamaged.

1. Check that the power switch at the back of the heater is OFF, and then plug the cord into a 110V outlet.
2. Turn the power switch on. Then press the ON/OFF button on the control panel on the top of the unit. The heater will run at high speed.
3. HEAT LOW/HIGH: Press the HEAT LOW/HIGH button on the control panel one time to turn it to HEAT HIGH. Low Mode is 450W and High Mode is 950W.
4. FAN: Press the FAN button on the control panel. A blue light will come on and the PTC will stop working. Only the fan will run and it will produce regular air.
5. SWIVEL: When you press the SWIVEL button, the heater will oscillate automatically. When you press it again, it will stop.
6. ON/OFF: When you press the ON/OFF button after the unit is on, the unit will shut off. The fan will automatically blow for another 20 seconds, which helps to extend the lifetime of the PTC.

WARNING:

When the heater is covered or blocked by an object while it is heating, the sensor will shut the heater down. After it cools down, it can be restarted.

Don't cover the heater or it will overheat.

Don't touch the front screen of the unit while the heater is running.

Don't block the air intake. Keep at least 4" of space between the air intake and other objects.

PRODUCT DIAGRAM

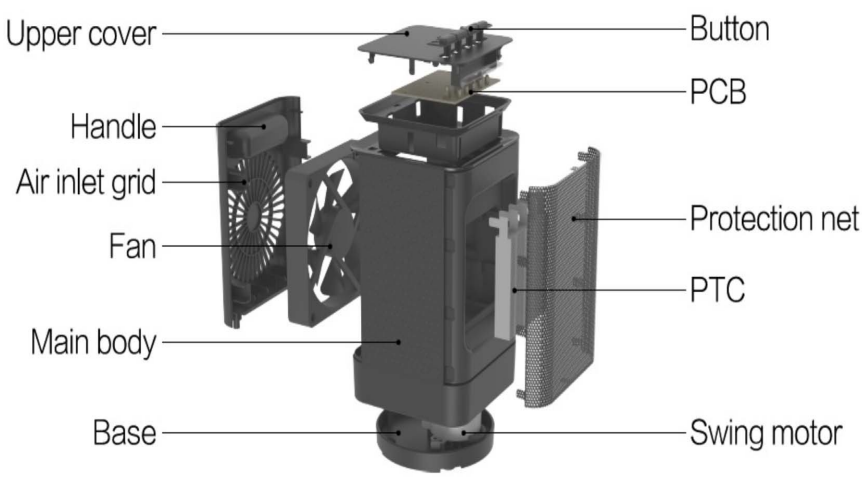

MAINTENANCE

1. Turn off the power switch in the rear of the unit.
2. Clean any dirt or oils found on the main body of the heater immediately. Otherwise, it may fade or damage the unit.
3. Clean with a damp cloth and a very small amount of mild dish detergent and then dry with a soft cloth.
4. Only clean the outer cover of the unit.
5. Never spray the unit with water. Do not clean with harsh detergent or it may fade and damage the unit.
6. After cleaning, pack the unit back in the box and store it in a dry place.

TROUBLESHOOTING

Problem	Reasons	Solution
Heater won't start	The power cord is not plugged in	Check to make sure the power cord is plugged in
	Main switch not plugged in	Check the switch
	Body is damaged	Check the switch button
Heater won't turn off	Switch not well connected	Call Customer Service
	Body is damaged	Call Customer Service
	PCB damaged	Call Customer Service
Fan is noisy	There may be a foreign object in the fan or the fan assembly has come loose. Check the rear of the unit to see if there is a foreign object. If not, call Customer Service for instructions	Remove the object or call Customer Service
Indicator light won't turn on	Indicator light is damaged	Call Customer Service

WARRANTY

Your GEN70 comes with a ONE-YEAR LIMITED COMPONENT WARRANTY. If your unit does not appear to be working properly, please contact our service center by calling 1-800-225-6595. Prior to your call, we encourage you to visit our service related website www.edenpuresupport.com for troubleshooting tips and service instructions if needed.

EdenPURE

7584 Whipple Avenue NW

North Canton, OH 44720

To place an order, call 1-800-360-1070 or visit www.edenpure.com.